Fuji Electric

Innovating Energy Technology

D&C DISTRIBUTION & CONTROL CATALOG

Digest 21th Edition

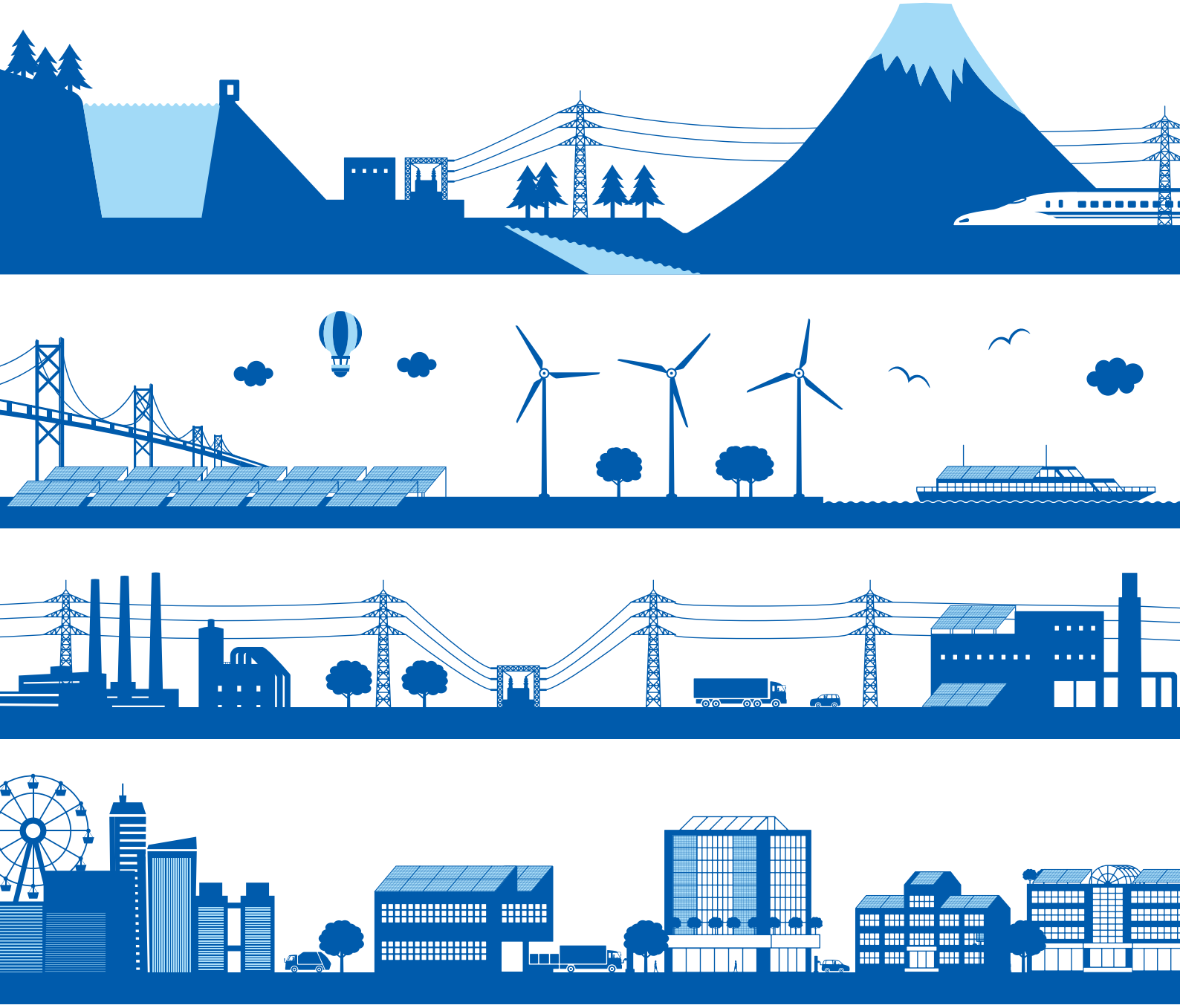

Fuji Electric FA Components & Systems Co., Ltd.

Introduction

The “D&C General Catalog 21st Edition” introduces and summarizes the latest information on all the power distribution and control devices manufactured and sold by Fuji Electric.
We have compiled it in expectation that it will enable our customers to understand the key features of our products and help them choose the most suitable devices when designing and constructing electric circuits, including those for power receiving and distribution equipment and production facilities.

Product Searchability

Reorganization of product categories (i.e., chapters)

In order to improve searchability, we established broad categories according to product type and character and then organized and classified the products based on the categories. We also revised the ordering of some of the categories. The table below shows how product categories are categorized and how they correspond to the chapters in the previous edition.

Main categories		Subcategories	Corresponding chapter in 20th Edition
A Motor Control	A1	Magnetic Contactors and Starters, Thermal Overload Relays, Solid-state Contactors	Chapter 01
	A2	Manual Motor Starters and Contactors, Combination Starters	Chapter 02
B LV Distribution	B1	Molded Case Circuit Breakers, Earth Leakage Circuit Breakers	Chapter 06, 07
	B2	Circuit Protectors, Low Voltage Fuses	Chapter 08
C Control	C1	Pushbuttons, Selector Switches, Pilot Lights, Rotary Switches, Cam Type Selector Switches, Panel Switches, Terminal Blocks, Testing Terminals	Chapter 04
	C2	Industrial Relays, Industrial Control Relays, Annunciator Relay Unit, Time Delay Relays	Chapter 03
	C3	Limit Switches, Proximity Switches, Photoelectric Switches	Chapter 05
D Energy Control Equipment	D1	Measuring Instruments, Arresters, Transducers, Power Factor Controllers, Power Monitoring Equipment (F-MPC)	Chapter 09
	D2	AC Power Regulators, Noise Suppression Filters, Control Power Transformers	Chapter 10
E MV Distribution Equipment	E1	Disconnecting Switches, Power Fuses, Air Load Break Switches, Instrument Transformers	Chapter 11
	E2	Vacuum Circuit Breakers, Vacuum Magnetic Contactors, Protective Relays	Chapter 12

Search products easily with Product Index & Alphabetic Type Index

Page searchability has also been enhanced when the product name and type are known beforehand. You can search directly for your desired specifications and usage conditions.

Introduces certified products from all over the world

The catalog introduces a variety of products that have acquired international certification, including UL/CSA standard, CE marking, and China CCC certification.
You will certainly find what you are looking for by using the catalog to search for products that can be used globally.

Facilitates board design via use with product selection apps

Various support tools are available, making it easy to select products based on load and operating conditions. Select products by using the apps in combination with the catalog.
Each app can be downloaded to your PC or smartphone from the following websites.

Magnetic Contactor Selection App (SC Series)

https://f-net.fujielectric.co.jp/Catalog/FCS_appli/MCLifeCurve_SC_en/MCLifeCurve_SC_en.html

Magnetic Contactor Selection App (SK Series)

https://f-net.fujielectric.co.jp/Catalog/FCS_appli/MCLifeCurve_SK_en/MCLifeCurve_SK_en.html

Magnetic Motor Starter and MCCBs Selection App (MS Scale)

https://f-net.fujielectric.co.jp/Catalog/FCS_appli/MSScale_en/MSScale_en.html

We also offer catalogs for each specific model. For more information, refer to the following website.

General notes concerning the catalog content

MINIMUM ORDERS

Orders amounting to less than ¥10,000 net per order will be changed as ¥10,000 net per plus freight and order changes.

WEIGHTS AND DIMENSIONS

Weight and dimensions appearing in this catalog are the best information available at the time of going to press. FUJI ELECTRIC FA has a policy of continuous product improvement, and design changes may make this information out of date. Please confirm such details before planning actual construction.

INFORMATION IN THIS CATALOG IS SUBJECT TO CHANGE WITHOUT NOTICE.

DIGEST INDEX

DISTRIBUTION & CONTROL CATALOG

Digest 21th Edition

A Motor Control

A1 Magnetic Contactors and Starters, Thermal Overload Relays, Solid-state Contactors ····· A1-1

A2 Manual Motor Starters and Contactors, Combination Starters ····· A2-1

A1

Magnetic Contactors
SC and SW Series

A1

Solid-state Contactors

A2

Manual Motor Starters

A2

Magnetic Conductors
SK Series

B LV Distribution

B1 Molded Case Circuit Breakers, Earth Leakage Circuit Breakers ····· B1-1

B2 Circuit Protectors, Low Voltage Fuses ····· B2-1

B1

Molded Case Circuit Breakers

B1

Earth Leakage Circuit Breakers

B2

Circuit Protectors

B2

Low Voltage Fuses

C Control

C1 Pushbuttons, Selector Switches, Pilot Lights, Rotary Switches, Cam Type Selector Switches, Panel Switches, Terminal Blocks, Testing Terminals C1-1

C2 Industrial Relays, Industrial Control Relays, Annunciator Relay Unit, Time Delay Relays C2-1

C3 Limit Switches, Proximity Switches, Photoelectric Switches C3-1

C1

Command Switches

C2

Industrial Relays

C2

Miniature Control Relays

C3

Limit Switches

D Energy Control Equipment

D1 Measuring Instruments, Arresters, Transducers, Power Factor Controllers, Power Monitoring Equipment (F-MPC) D1-1

D2 AC Power Regulators, Noise Suppression Filters, Control Power Transformers D2-1

D1

Surge Protective Devices

D1

Power Monitoring Equipment (F-MPC)

D2

AC Power Regulators

D2

Noise Suppression Filters

E MV Distribution Equipment

E1 Disconnecting Switches, Power Fuses, Air Load Break Switches, Instrument Transformers E1-1

E2 Vacuum Circuit Breakers, Vacuum Magnetic Contactors, Protective Relays E2-1

E1

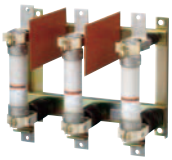

Power Fuses

E1

Air Load Break Switches

E2

Vacuum Circuit Breakers HS series

E2

Vacuum Circuit Breakers MULTI.VCB

Category

A Motor Control

Magnetic contactors, magnetic starters A1

See pages A1-2 for details.

SC series

- Standard product features:
  - ・Compliant with international standards (UL, CSA, CE, LR, BV, etc.)
  - ・Reliable structural design utilizing mirror contacts
- High operating reliability: Prevents coil burnout and contact welding and eliminates moaning sounds through the use of an IC mounted super magnet (SC-N6 or higher)
- Long life expectancy: Electrical switching durability of 2 million operations (SC-N3 or lower)
- Improved contact reliability: Use of bifurcated auxiliary contact

SC-N5A

SC-N1

Manual motor starters A2

See pages A2-1 for details.

BM3 series

- Compact units that integrate overcurrent breaking for breakers and overload protection for thermal overload relays. Comes in two modules (45 mm and 55 mm widths), covering a rated operating current from 0.1 to 63 A
- Available in two types: Adjustable rated current type and instantaneous trip type.
  Adjustable rated current type also allows user to choose according to breaking capacity (standard type and high breaking capacity type)
- Can be used in combination with SK/SC-E Series magnetic contactors
- Available with round crimp terminal (45 mm width adjustable rated current)

BM3RSR-032

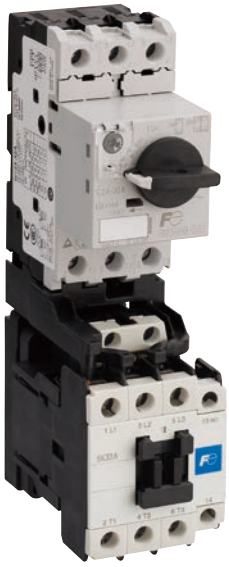

BM3RHB-032

Fuji Electric's magnetic starters enjoy the top market share in the field of motor-operated control systems. These one-of-a-kind components achieve high performance and are used to create optimal control systems for a variety of industrial facilities.

Magnetic contactors, thermal overload relays

A2

See pages A2-37 for details.

SK series

- World's smallest class. Standard products are compliant with international standards (UL, CSA,CE, etc.)
- Ideal for inverters and servo circuits (for primary side disconnection)
  - ・Can be used in combination with BM3 Series manual motor starters.
  - ・DC operated products: Two types of power consumption are available and can be selected according to the coil voltage and the number of auxiliary contacts.
- Various options : Auxiliary contact block, coil-surge suppression unit, etc.

SK32A

SK12L

Magnetic contactors

A2

See pages A2-97 for details.

SC-E series

- Standard products are compliant with international standards (UL, CSA, CE, etc.)
- Series of 3-pole main circuit products (E02 to E4) available in 3 widths: 43 mm (up to 25 A), 54 mm (up to 50 A), 67 mm (up to 80 A)
- User-friendly structural design:
  - ・Finger protection terminal structure: Prevents exposure of the live section
  - ・Box terminal structure: Direct wire connection is possible through main circuit wiring (E1 to E7)
- High operational reliability via use of super magnet (AC input, DC output excitation system) (E5, E6, and E7)

SC-E2S

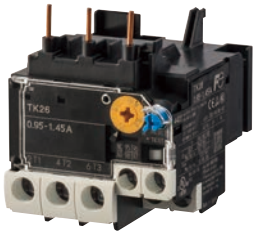

xxxxxxxxxx

Category

B LV Distribution

Molded case circuit breakers, earth leakage circuit breakers B1

See pages B1-1,93 for details.

G-Twin series

- Rich lineup of 32 AF to 800 AF molded case circuit breakers and earth leakage circuit breakers.
- MCCB/ELCB achieve standardized dimensions. Furthermore, by designing optional accessories as box-type products, frame and MCCB/ELCB commonality has been realized, along with expanded applicability.
- Standard products are compliant with multiple international standards (IEC, EN, GB, JIS, UL/CSA etc.)
- By utilizing arc gas flow control cutoff technology, these products comply with the high breaking performance requirements of international standards and achieve common dimensions with previous products

BW125JAG

EW125JAG

Molded case circuit breakers, earth leakage circuit breakers B1

See pages B1-180 for details.

G-Twin Λ series

- Miniaturization:
  - Compatible with the branch circuits of space-restricted mechanical devices and control panels, and corresponds to the globalization of machine control devices.
  - Common size for both molded case circuit breakers and earth leakage circuit breakers. Thin structure achieving 54 mm width for 3-pole products and 36 mm width for 2-pole products (28% reduction compared with our previous products).ELCB also achieve a 2-pole width of 36 mm.
- High breaking capacity:
  Utilizes arc commutation breaking technology to realize a higher level of breaking performance in order to meet the market needs of control panel branch circuits.

BW32SBG-2P032

BW32SBG-3P032

Fuji Electric has continuously pioneered the market with innovative products, such as the release of the TWIN Breaker Series (the world's first molded case circuit breaker and earth leakage circuit breaker with standardized dimensions) in 1990. By building on these technologies, we have been able to continuously develop products that help protect people and equipment from electrical accidents.

Earth leakage protective relays

B1

See pages B1-215 for details.

BRR・EL・RRD series

- Earth leakage protective relays that detect leakage and operate through contact output exclusively for alarm output
- ZCT integrated types (BRR Series) and isolated types (EL Series/ RRD Series) are available
- Lineup with rated capacity up to 3000 A: Can be used for leakage monitoring of water treatment facilities, etc. and as a ground fault cutoff device for large current circuits in combination with breakers

EL25P0

Circuit protectors

B2

See pages B2-1 for details.

CP30F series

- Ultra-thin type: Width per pole = 17.5 mm
- Standard products are compliant with international standards. Both AC/DC compatible (1-pole, 2-pole)
- Designed for users:
  - ・Finger protection structure (IP20 equivalent)
  - ・Improves wiring workability via revision of terminal arrangement for auxiliary circuits
- Supports up to 2 internal auxiliary/alarm switches (1NO or 1NC) Auxiliary circuit terminal cover is also available.

CP30FM-1P

CP30FM-2P

Category

C Control

Pushbuttons, Pilot lights C1

See pages C1-1 for details.

AR/DR series

- Panel mounting size: Φ16 (AR/DR16), Φ22 (AR/DR22) and Φ30 (AR/DR30)
- Easy to add or replace name plate and etc., by front tightening nut system.
- Implemented with short body-depth length
- Wiring from two directions is possible (AR30/DR30 Series)
- AR/DR22 and AR/DR30 standard products have acquired UL/CSA and TÜV (EN standard) certification

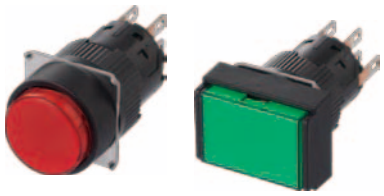

AR16/DR16 series

AR22/DR22 series

Industrial Relays C2

See pages C2-1 for details.

SH series

- The relays' highly reliable, bifurcated contacts allow them to be used in low level circuits of 5V, 3mA.
- Various optional function units, such as auxiliary contact blocks, coil surge suppression units etc., can be added to the relays, allowing fast and field modification.
- One-touch mounting on IEC 35 mm wide rails
- Standard products are compliant with international standards (UL, CSA, CE, etc.)

SH-4

SH-5

We will satisfy our customers' demands through our wide variety of controlling and indication devices and global standard sensors added, and providing comprehensive solutions such as relays and time delay relays.

Miniature control relays/Miniature power relays

C2

HH52,53,54 series
HH62,63,64 series

See pages C2-25,37 for details.

●Easy coil voltage discrimination via color-specific decorative paper for the coil

●Standardizes UL, CSA and TÜV certified products

< HH52,53,54 series >

・Lineup designed for high capacity systems, bifurcated contact systems, low-voltage guaranteed systems, etc.

・Rich variety including those with LED indicators and surge suppression circuits. Various mounting configurations available

<HH62,63,64 Series>

・Compact, lightweight and large contact capacity of 10 A. Ideal as a power relay for various devices

HH54P-L

HH64P+RZ64

Limit switches

C3

AL series
K244 series

See pages C3-2,11 for details.

●AL Series:

・Available in 2 vertical type structures: Compact and compact wide case

・Comes standard with contact direct opening mechanism

・Double packed to ensure oil tightness and sludge mitigation

●K244 series

・Simple and robust structure

・Mechanical life expectancy of at least 10 million operations (at continuous use of 3,000 operations per hour)

AL-SN11

K244gR

Category

D Energy Control Equipment

Power line Multi-meters

D1

See pages D1-10 for details.

WE1MA series

- Supports single-unit measurement of the following: Voltage, current, demand current, power, demand power, reactive power, apparent power, power factor, frequency, leakage current, harmonic RMS values (A, V), distortion factor (A, V), harmonic content rate (A, V), electric energy and reactive electric energy
- Compatible with various outputs: Analog 4 circuits, pulses, alarms, CPU abnormalities, communication protocols (Option. CC-Link, Modbus RTU, RS-485, F-MPC-Net, AnyWire)
- Comes standard with a backlight (white)

WE1MA

Power Monitoring System

D1

See pages D1-198 for details.

F-MPC series

- Enables power monitoring (energy saving) and insulation monitoring (preventive maintenance) of various devices, including high-voltage switchboards, low-voltage electrical distribution switchboards and standalone devices
- Contributes to energy savings: Enables power analysis and report creation, countermeasures planning (equipment selection) and implementation (online monitoring)
- Achieves “visualization” of power systems, including those at each factory site.

F-MPC60G

F-MPC04S

We help our customers to “visualize electric power” by means of a wide range of products and our reliable engineering capabilities. We make energy-saving proposals according to our customers’ energy environment in areas ranging from quality assurance and protection of high-voltage electric power to management of low-voltage consumption rate.

PWM type AC power regulator

D2

See pages D2-2 for details.

PWMAPR-M series

- Utilizes our proprietary PWM control method
  - ・No harmonic current countermeasures required
  - ・Achieves energy savings by not impacting the load power factor
  - ・Can be used as a test power supply via its sine wave output
- Comes standard with a VLR function (voltage limit) that is useful for lamp loads, etc.
- Comes standard with a setting indicator, and enables gradient setting and selection of feedback method for constant current, constant voltage, constant power, etc.

RPME2020M RPME2080M

Noise Suppression Filters

D2

See pages D2-43 for details.

RNFTD/RNFMC series

- RNFTD series:
  - ・For the mounting method, both the 35 mm-width IEC standard rail and M4 screw mounting are possible.
  - ・The product uses a terminal coverless structure that prevents terminal screws from falling and serves as a finger protector.
  - ・It is 71% lighter than our company’s conventional products.
- RNFMC series:
  - ・Products with rated current of 75 and 100 A have acquired overseas safety standards (UL1283, CSA C22.2, No.8, EN60939-2).
  - ・Models with a rated current of 60A or 150 A and above were designed based on overseas standards.
  - ・The external terminal is certified as a field-wiring terminal.

RNFTD6-20

RNFMC1H-20

Category

E MV Distribution Equipment

Disconnecting switches

E1

See pages E1-1 for details.

V/RF series

- 7.2/12/24/36kV, 200 Amps to 4000 Amps
- Withstand large momentary current flow
- Excellent contact performance
- Compact and light in weight
- Heavy-duty construction
- Stick-operated/gang-operated/motor operated types

V3-20

Power fuses

E1

See pages E1-17 for details.

SCF/E series

- Current limiting fuses for general purpose cutoff Can be combined with standalone fuses or switchgear that do not utilize a trip device.
- Long life expectancy with excellent cyclical current carrying performance
- Excellent current limiting performance.
- Operating overvoltage at cutoff: 2 times or less

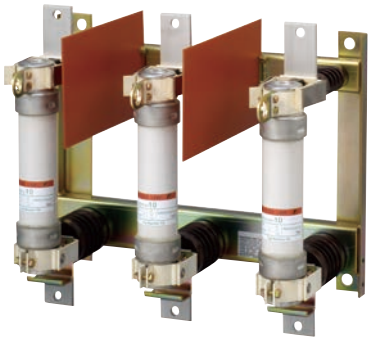

E series

We satisfy the needs of our customers with highly reliable products and various types of medium-voltage apparatus that support recent sophisticated power-receiving and distributing systems including our medium-voltage vacuum circuit breaker that secures safety of electric equipment.

Air load break switches

E1

See pages E1-26 for details.

LBS series

- Use of striker mechanism: Automatically opens the switch when a fuse blows
- Prevents open phase and enables general purpose cutoff
- Supports both 3/6 kV
- Small and lightweight: Can be mounted by one person
- Wide range of options (auxiliary switch, blown-fuse indicator contact, insulation barrier)

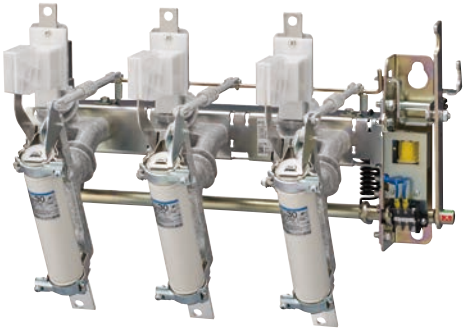

LBS-6A

Vacuum circuit breakers

E2

See pages E2-4 for details.

HS series

These types are available in all ratings from 3.6 to 36kV, and can be applied to a variety of H.V. switchgear. The motor-spring stored-energy types feature auto-reclosing. The HS types are comparatively high in breaking current with ratings of over 7.2kV, 20kA.

- Breaking currents: 12.5kA to 50kA
- Rated voltage: 3.6kV to 36kV
- Standards: IEC, JEC

HS4006Y-12Mf-E

Product Index

A Motor Control

A1 Magnetic Contactors and Starters, Thermal Overload Relays, Solid-state Contactors

Magnetic Contactors and Starters
SC and SW series standard type
General information A1-1
Versions A1-2
Quick selection guide
Non reversing, Open type A1-4
Enclosed type A1-9
Reversing, Open type A1-12
Enclosed type A1-15
Type number nomenclature A1-17
Ordering code system A1-18
Specifi cations A1-20
Standard type A1-25
Reversing standard type A1-34
DC operated A1-41
OFF-delay release A1-46
With extra pick-up operating coil A1-47
Mechanical latch contactors A1-48
Heavy starting duty starters A1-53
With quick operating overload relay A1-55
With phase-loss protective device A1-56
With phase-loss and phase-sequence protective device A1-58
Enclosed with pushbuttons A1-60
Dust-tight/light-corrosion resistance A1-62
For single-phase resistance load A1-63
With single button auxiliary contact A1-64
With quick connection terminals A1-65
Optional unit A1-66

DC Magnetic Contactors
SB series A1-77

Magnetic Contactors and Starters
FC and FW series
FC series A1-80
Ordering code system A1-81
FW series A1-83
FW series with pushbuttons A1-86

Thermal Overload Relays
TR series A1-87
TK series A1-102

Solid-state Contactors
SS series A1-104

Magnetic Contactors and Starters
UL and CSA approved A1-119
TÜV approved A1-127
CCC approved A1-131

A2 Manual Motor Starters and Contactors, Combination Starters

DUO Series Manual motor starters
Quick reference guide A2-1
Adjustable thermal-magnetic trip types A2-3
Instantaneous trip types A2-5
UL listed A2-6
Characteristic curves A2-7
Optional accessories A2-8
Dimensions A2-14
Wiring diagrams A2-17
Operating conditions A2-18
Busbar system A2-19

DUO Series Combination Starters
Features A2-23
Protective coordination A2-24
Combinations meeting for UL market A2-26
Optional accessories A2-27
Confi guration A2-28
Dimensions A2-30

SK Series Magnetic-Contactors
Standard Models A2-37
Production Models A2-39
Type Number Nomenclature (Magnetic Contactors, Thermal Overload Relays and Auxiliary Relays) A2-40
Ratings A2-42
Protective Coordination A2-48
Normal Operating Conditions and Mounting A2-59
Wiring A2-61
Handling A2-63
Magnetic Contactors A2-65
Reversing Magnetic Contactors A2-69
Thermal Overload Relays A2-76
Optional Unit A2-80
Auxiliary Relays A2-95

SC-E Series Magnetic-Contactors
Quick reference guide A2-97
Optional accessories A2-107
Dimensions A2-109
Operating conditions A2-119
Thermal overload relays TK-E series A2-122

B L.V. Distribution Equipment

B1 Molded Case Circuit Breakers, Earth Leakage Circuit Breakers

G-TWIN series Molded Case Circuit Breakers
List of products B1-1
Type number nomenclature B1-2
Quick reference guide B1-4
Mounting modifications B1-22
Terminal connection B1-24
Wire size and terminal B1-25
Type number B1-29
Arc space B1-38
Dimensions B1-39
Characteristic curves B1-58
Accessories B1-63

G-TWIN series Earth Leakage Circuit Breakers
List of products B1-93
Type number nomenclature B1-94
Quick reference guide B1-96
Mounting modifications B1-114
Terminal connection B1-116
Wire size and terminal B1-117
Type number B1-121

Arc space B1-127
Dimensions B1-128
Characteristic curves B1-143
Accessories B1-149

G-TWIN Λ series Molded Case Circuit Breakers / Earth Leakage Circuit Breakers
Type number nomenclature B1-180
Specifications B1-181
Mounting and connection B1-186
Accessories B1-189
Data, Characteristics curves, Dimensions B1-202

Earth Leakage Protective Relays
Description/Selection guide B1-215
Type number nomenclature/Specifications B1-216
Wire size B1-217
Dimensions B1-222
Wiring diagrams B1-225

B2 Circuit protectors, Low voltage fuses

Circuit Protectors
CP30F B2-1
CP31, 31D, 32D B2-7
CP31P, 32P, 33P B2-10
CP51B, 52B, 53B B2-16
CP31E, 32E, 33E, 34E, CP31V, 32V, 33V, 34V B2-21

Low Voltage Fuses
General information B2-27
Current-limiting fuses
AFaC, BaC B2-28
FCF, FCK B2-31
Super rapid fuses
BLC, CR, CS B2-33

C Control

C1 Pushbuttons, Selector Switches, Pilot Lights, Rotary Switches, Cam Type Selector Switches, Panel Switches, Terminal Blocks, Testing Terminals

Command Series
AR22 and DR22
General information C1-1
Quick reference guide C1-3
Type number nomenclature C1-7
Ratings and specifications C1-12
Pushbuttons, selectors, pilot lights and buzzers C1-17
Dimensions C1-40
Notes on use C1-50
AR30 and DR30
General information C1-57
Quick reference guide C1-58
Type number nomenclature C1-62
Ratings and specifications C1-67
Pushbuttons, selectors, pilot lights and buzzers C1-73
Dimensions C1-96
Notes on use C1-107
Accessories for AR22/DR22 and AR30/DR30 ..... C1-112
Special products C1-124
Mass (AR22/DR22 and AR30/DR30) C1-129
AR16, DR16 and AF16, DF16
General information C1-133
AF16, DF16 Quick reference guide C1-134
Ratings and specifications C1-140
Type number nomenclature C1-143
Type numbers and dimensions (AR16 and DR16) C1-147
Type numbers and dimensions (AF16 and DF16) C1-159
Panel cutout and mounting C1-171
Notes on use C1-173
Accessories C1-179
Mass C1-183
Integrated contact structure AR16V series C1-184
AH164 and AH165
General information C1-190
Quick reference guide C1-191
Type number nomenclature C1-195
Ratings and specifications C1-197
Pushbuttons, selectors, pilot lights and buzzers C1-199
Mounting space C1-213
AH165-2
Type number nomenclature C1-214
Ratings and specifications C1-216
Pushbuttons, selectors and pilot lights C1-217
Mounting space C1-227
Notes on use (AH164, AH165 and AH165-2) C1-228
Accessories for AH164, AH165 and AH165-2 ..... C1-231
Mass (AH164, AH165 and AH165-2) C1-237

Multi Display Lights
AP30F and AP40F
General information C1-239
Specifications and performance C1-242
Type number nomenclature C1-244
Dimensions C1-246
Notes on use C1-249
Accessories C1-252
Window layout sheet C1-259

Rotary Switches
AC09, AC16 and AC32
Digital code output type C1-262

Cam Type
RC310
Control selector switches C1-273

Panel Switches
NS387 and RC310
Instrument switches C1-280

Terminal Blocks
General information C1-282
AYBN General purpose terminal blocks C1-283
AYBS High quality terminal blocks C1-285
LT4D Channel mounted type terminal blocks with islating switch C1-286
LT2E Rail mounted terminal blocks C1-289
Testing Terminal TT Testing terminals for VT and CT circuits C1-294

Command Series
CCC approved C1-295

Product Index

C2 Industrial Relays, Industrial Control Relays, Time Delay Relays

Industrial Relays
SH series
General information....C2-1
Optional units....C2-2
Standard type....C2-3
DC-operated type....C2-6
UL and CSA approved....C2-8
TUV and CCC approved....C2-9
Off-delay release type....C2-10
Mechanical latch type....C2-11
With extra pick-up operating coil....C2-13
With quick terminals....C2-14

Industrial Control Relays
Card relays RB104,105....C2-15
Relays-and-terminal module....C2-16
Miniature control relays HH52, HH53, HH54....C2-25
Miniature power relays HH62, HH63, HH64....C2-37
General purpose relays HH22, HH23, HH24....C2-41

Annunciator Relay Units
RV, JH13PN-Flicker relays....C2-46

Time Delay Relays
General information....C2-49
Ordering code system....C2-50
Selection guide....C2-51
Super Timers
MS4S series....C2-52
ST7P, 7B....C2-60

C3 Limit Switches, Proximity Switches, Photoelectric Switches

Limit Switches
General information....C3-1
AL-S....C3-2
K244....C3-11
Standard type....C3-13
Reversing roller type....C3-16
HK244, WK244....C3-18

Proximity Switches
General information....C3-20
Inductive proximity switches
PE-U12D, PE-U25NT....C3-23
PE1-C, PE1-Y....C3-24
PE-B....C3-28
PE-X15D....C3-31
PE-T....C3-32
PE2-C....C3-34
PE-X3D....C3-38
PE-G4D....C3-39
PE2-LA10D....C3-40
Magnetically operated reed switches
PM1U....C3-42
AES....C3-44
AER....C3-45

Photoelectric Switches
General information....C3-46
PH1C....C3-48
PH8AU....C3-53

D Energy Contril Equipment

D1 Measuring Instruments, Arresters, Transducers, Power Factor Controllers, Power Monitoring Equipment (F-MPC)

Switchboard Instruments
WM8N type....D1-1
WE1MA type....D1-10
WE1MB type....D1-21
WE1SA, WE1SV type....D1-26
WE1GL type....D1-30
WE1B/1C type....D1-37
WE1RL type....D1-43

Panel Instruments
F type....D1-51

Transducers
WS2 Series....D1-59
WS3 Series....D1-81
WS4 Series....D1-83
WS5MT Series....D1-105
WF Series....D1-111

Surge protective devices
CN56 series....D1-139
CN57 series....D1-141
CN57-FK series....D1-143
CN5B series....D1-145
CN5D series....D1-147
Dimensions....D1-149
CN226 series....D1-151
CN226-24A, 48A, 100B....D1-153
CN227-CAT5E....D1-154
CN227 series....D1-155
CN2340, CN2341....D1-157

Instrument Transformers
General information....D1-158
Through-type CT/CC3L....D1-159
CT with primary winding/CC3P....D1-162
Through type CT/CC3M....D1-164
Split type CT/CC2....D1-168
Potential transformer/CD32, 34, 36....D1-174
Insulation cap for low-pressure transformer/SB-4064-23....D1-176
Special use, application to overseas standards....D1-177
Maintenance and Inspection....D1-178
Comparison table between new and old types of low-pressure V/CT....D1-179

Power Factor Controllers
Automatic power factor regulator QC06E and QC12E....D1-182

Power Monitoring Equipment
General information....D1-198
F-MPC60G, F-MPC60B, F-MPC30....D1-199
F-MPC Web unit....D1-225
F-MPC04, F-MPC04P, F-MPC04S, F-MPC04E....D1-229
F-MPC I/O unit....D1-247
Related equipment....D1-249
Terminal relay RS16....D1-257
Connector terminal-block AU-CW21B1....D1-258

Digital Panel Meter
WA4000 series....D1-259
WA9000 series....D1-261
WA2100 series....D1-265

Earth Leakage Protective Relays for Low Voltage
CH5 Series....D1-266
QL-11B and QL-11F....D1-268
QL-30B, QL-31BN, and QL-31BA....D1-270
QL-30P....D1-272
QL-21B and QL-21F....D1-274
QL-51F....D1-276

D2 AC Power Regulators, Noise Suppression Filters, Control Power Transformers

AC Power Regulators
Quick selection guide....D2-1
PWMAPR-M series....D2-2
PWM-APR series....D2-4
APR-N series....D2-6
APR-D series....D2-22
APR-αA series....D2-38
Applications....D2-42

Noise Suppression Filters
Quick selection guide....D2-43
RNFTD, RNFDS series....D2-44
RNFTC series....D2-46
RNFMC series....D2-49
RNFHA series....D2-52
RNFTS, RNFMS series....D2-55
RNFT, RNFM series....D2-57
Application and Mounting Methods....D2-59
Dangers/Warnings....D2-62
RNFT series....D2-63

Control Power Transformers
CU1F, CU3F....D2-65

Voltage Fault Countermeasure Devices
TRAFY FFT Series....D2-72

Switching Power Supplies
Rail Mounting Type CY3 Series....D2-81

E M.V. Distribution Equipment

E1 Disconnecting Switches, Power fuses, Air load break switches, Instrument transformers

Disconnecting Switches
V and RF type....E1-1
Dimensions....E1-3
Operating mechanism....E1-9

Power Fuses
General information....E1-10
Applications....E1-11
General purpose fuses SCF, HF, SCH....E1-17
Back-up fuses JR, HF....E1-18
Characteristic curves....E1-19
Dimensions....E1-22

Air Load Break Switches
General information....E1-26
Accessories/LB type....E1-28
Accessories/LBS type....E1-29
Dimensions....E1-31

Instrument Transformers
VT, CT
General information....E1-37
Types and ratings....E1-39
Dimensions....E1-42
ZCT, EVT, special purpose CT
General information....E1-46
Specifications....E1-47
Dimensions....E1-48

E2 M.V. Vacuum circuit breakers, M.V. Vacuum magnetic contactors, Protective relays

Vacuum Circuit Breakers
General information....E2-1
Advantages....E2-2
HS series
General information....E2-4
Specifications....E2-5
Types and ratings....E2-10
Installation and accessories....E2-12
Dimensions....E2-13
Wiring diagrams....E2-22
Application guide....E2-23
AUTO.V/New-AUTO.V
AUTO.V
Specifications....E2-24
Design features....E2-25
Types and ratings....E2-26
New-AUTO.V
Specifications....E2-27
Types and ratings....E2-30
Type number nomenclature....E2-31
Installation and accessories....E2-32
Dimensions....E2-35
Wiring diagrams....E2-44
MULTI.VCB
Specifications....E2-50
Type number nomenclature....E2-51
Types and ratings....E2-52
Installation and accessories....E2-53
Dimensions....E2-55
Wiring diagrams....E2-63

Vacuum Magnetic Contactors
HN series....E2-65

Protective Relays
QHA series
General information....E2-74
Dimensions....E2-78
Wiring diagrams....E2-79

Alphabetical Type Index

A

AC09 ..... C1-263
AC16,32 ..... C1-264
ACX001,011 ..... C1-266
AER C3-45
AES C3-44
AF16F0L,F5L C1-134,159
AF16F0M,F5M C1-134,159

AF16F0N,F5N C1-134,159
AF16F0R,F5R C1-135,161
AF16F0S,F5S C1-135,161
AF16F0T,F5T C1-135,161
AF16JR,JS,JT C1-138,168
AF16PR,PS,PT C1-137,165
AF3320R3TC5R E2-12,23,33,54,69
AF6620R3TC5R E2-12,23,33,54,69
AF6D826,827 ..... C1-179
AF6Y622,644,645 ..... C1-181

AF6Y850,851,852 ..... C1-181
AFa B2-28,42
AGX001,002 ..... C1-235
AGX012 ..... C1-235
AH164-E,E5 ..... C1-203
AH164-J0,J2 ..... C1-205
AH164-J1,J3,J6,J7 ..... C1-207
AH164-JK1,JK3,JK6,JK7 ..... C1-208
AH164-L,L5 ..... C1-199,201
AH164-M,M5 ..... C1-203

AH164-P0,P2 ..... C1-205
AH164-P1,P3,P6,P7 ..... C1-207
AH164-PK1,PK3,PK6,PK7 ..... C1-208
AH164-SF,SF5 ..... C1-203
AH164-SGF,SGF5 ..... C1-203
AH164-SGL,SGL5 ..... C1-200,201
AH164-SJ0,SJ2 ..... C1-205
AH164-SJ1,SJ3,SJ6,SJ7 ..... C1-207
AH164-SJK1,SJK3,SJK6,SJK7 ..... C1-208
AH164-SL,SL5 ..... C1-199,201

AH164-SM,SM5 ..... C1-203
AH164-SP0,SP2 ..... C1-205
AH164-SP1,SP3,SP6,SP7 ..... C1-207
AH164-SPK1,SPK3,SPK6,SPK7 ..... C1-208
AH164-TF,TF5 ..... C1-203
AH164-TGF,TGF5 ..... C1-203
AH164-TGL,TGL5 ..... C1-200,201
AH164-TL,TL5 ..... C1-199,201
AH164-TM,TM5 ..... C1-203
AH164-TX1B,TX2B C1-212

AH164-TXB C1-212
AH164-Z C1-210
AH164-ZS,ZT C1-210
AH165-2E,2E5 ..... C1-220
AH165-2EL,2EL5 ..... C1-217
AH165-2F,2F5 ..... C1-220
AH165-2FL,2FL5 ..... C1-217
AH165-2H2 ..... C1-223
AH165-2J0,2J2 ..... C1-222
AH165-2J1,2J2,2J6,2J7 ..... C1-224

AH165-2M C1-220
AH165-2ML C1-217
AH165-2P0,2P2 ..... C1-222
AH165-2P1,2P3,2P6,2P7 ..... C1-224
AH165-2PL2,2PL3 ..... C1-225

AH165-2S2 ..... C1-221
AH165-2SCE,2SCE5 ..... C1-220
AH165-2SCL,2SCL5 ..... C1-218
AH165-2SE,2SE5 ..... C1-220
AH165-2SEL,2SEL5 ..... C1-218
AH165-2SF,2SF5 ..... C1-220
AH165-2SFL,2SFL5 ..... C1-218
AH165-2SH2 ..... C1-223
AH165-2SZ,2SZE C1-226
AH165-2V C1-221

AH165-2VL C1-219
AH165-2YJ0,2YJ2 ..... C1-222
AH165-2YJ1,2YJ2,2YJ6,2YJ7 ..... C1-224
AH165-2YM C1-220
AH165-2YML C1-217
AH165-2YP1,2YP3,2YP6,2YP7 ..... C1-224
AH165-2YS2 ..... C1-221
AH165-2YV C1-221
AH165-2YVL C1-219
AH165-2Z,2ZE C1-226

AH165-E,E5 ..... C1-203
AH165-J0,J2 ..... C1-205
AH165-J1,J3,J6,J7 ..... C1-207
AH165-JK1,JK3,JK6,JK7 ..... C1-208
AH165-JM2 ..... C1-206
AH165-L,L5 ..... C1-199,201
AH165-M,M5 ..... C1-203
AH165-P0,P2 ..... C1-205
AH165-P1,P3,P6,P7 ..... C1-207
AH165-PK1,PK3,PK6,PK7 ..... C1-208

AH165-RJM2 ..... C1-206
AH165-SF,SF5 ..... C1-203
AH165-SGF,SGF5 ..... C1-203
AH165-SGL,SGL5 ..... C1-200,201
AH165-SJ0,SJ2 ..... C1-205
AH165-SJ1,SJ3,SJ6,SJ7 ..... C1-207
AH165-SJK1,SJK3,SJK6,SJK7 ..... C1-208
AH165-SL,SL5 ..... C1-199,201
AH165-SM,SM5 ..... C1-203
AH165-SP0,SP2 ..... C1-205

AH165-SP1,SP3,SP6,SP7 ..... C1-207
AH165-SPK1,SPK3,SPK6,SPK7 ..... C1-208
AH165-TF,TF5 ..... C1-203
AH165-TGF,TGF5 ..... C1-203
AH165-TGL,TGL5 ..... C1-200,201
AH165-TL,TL5 ..... C1-199,201
AH165-TM,TM5 ..... C1-203
AH165-V1R,V5R,V6R C1-204
AH165-VR C1-204
AH165-XB C1-212

AH165-Z C1-210
AH165-ZM C1-210
AH165-ZS,ZT C1-210
AHX001 ..... C1-112
AHX004 ..... C1-117
AHX029 ..... C1-253
AHX032,033,034 ..... C1-123
AHX041,042,043 ..... C1-123
AHX052,088,093 ..... C1-122
AHX082 ..... C1-113

AHX111,113,149,157 ..... C1-123
AHX129,130,135 ..... C1-121
AHX129,135 ..... C1-253
AHX141 to 144 ..... C1-253
AHX177 ..... C1-116

AHX2601,2603 ..... C1-234
AHX2602 ..... C1-235
AHX2604 to 2614 ..... C1-233
AHX2615,2616 ..... C1-234
AHX279 ..... C1-121,253
AHX282 ..... C1-123
AHX2905 ..... B2-42
AHX2915 ..... B2-42
AHX305,376 ..... C1-123
AHX306 ..... C1-258

AHX321 ..... C1-112
AHX326 ..... C1-257
AHX407 ..... C1-253
AHX408 ..... C1-113
AHX426 ..... C1-123
AHX503 ..... C1-257
AHX511 ..... C1-257
AHX531 ..... C1-112
AHX539 ..... C1-118
AHX544 ..... C1-257

AHX601 ..... C1-187,235
AHX601,618,622,644,645,672 ..... C1-181
AHX615,616,617 ..... C1-231
AHX618 ..... C1-235
AHX622 ..... C1-235
AHX631,632,633 ..... C1-231
AHX641 to 645 ..... C1-235
AHX649 ..... C1-232
AHX650,651,652,653 ..... C1-231
AHX654,655 ..... C1-235

AHX664,665,666,667 ..... C1-231
AHX668,669 ..... C1-232
AHX671,676 ..... C1-232
AHX672 ..... C1-235
AHX682,683,684 ..... C1-231
AHX695,699 ..... C1-235
AHX697 ..... C1-236
AHX701,702,790 ..... C1-112
AHX702 ..... C1-272
AHX715 ..... C1-272

AHX720 ..... C1-116
AHX725,726 ..... C1-117
AHX727 ..... C1-119
AHX730 ..... C1-272
AHX744 ..... C1-272
AHX779 ..... C1-272
AHX780 ..... C1-272
AHX8003 ..... C1-112
AHX805,806 ..... C1-232
AHX822,826 ..... C1-232

AHX850 ..... C1-181,235
AHX958 ..... C1-114
AK22-1 ..... C1-270
AKX201,202,203 ..... C1-272
AL-3C E1-29
AL-S C3-1
AL-SK1 ..... C3-5
AL-SK1 ..... C3-10
AL-SK11 ..... C3-7
AL-SN1 ..... C3-5

AL-SN1 ..... C3-10
AL-SN11 ..... C3-7
AL-SN2, SN5 ..... C3-5
AL-SP1 ..... C3-5
AL-SP1 ..... C3-10

AL-SP11 ..... C3-7
AL-SS1 ..... C3-5
AL-SS1 ..... C3-10
AL-SS11 ..... C3-7
ALX-501 ..... C3-9
AP30F,40F C1-241
APCX012 to 017 ..... C1-252
APCX029 ..... C1-117
APCX029,030 ..... C1-253
APCX058,059 ..... C1-252

APCX077,079 ..... C1-252
APD1 ..... D2-19
APX111 ..... C1-257
APX507,509,510 ..... C1-120
AR16E0L,E5L C1-147
AR16E0N,E5N C1-134
AR16E0R,E5R C1-135,149
AR16F0M,F5M C1-134,147
AR16F0N,F5N C1-134,147
AR16F0S,F5S C1-135,149

AR16F0T,F5T C1-135,149
AR16G0N,G5N C1-135,149
AR16G0T,G5T C1-135,149
AR16JR,JS,JT C1-138,156
AR16PR,PS,PT C1-137,153
AR16V0L,V1L C1-139,186
AR16V0R,V1R C1-139,186
AR22A0H,A0N C1-38
AR22A1H,A1N C1-38
AR22A2H,A2N C1-38

AR22A5H,A5N C1-38
AR22A6H,A6N C1-38
AR22A7H,A7N C1-38
AR22E0L,E5L C1-17
AR22E0M,E5M C1-18
AR22E0P,E5P C1-18
AR22E0Y,E5Y C1-21
AR22F0L,F5L C1-17
AR22F0M,F5M C1-18
AR22F0P,F5P C1-18

AR22F0R,F0S,F0Y C1-20
AR22F5R,F5S,F5Y C1-20
AR22G0R,G3R,G4R,G5R,G8R,G9R ... C1-20
AR22G1L,G6L C1-18
AR22G2L,G7L C1-17
AR22G4L,G9L C1-17
AR22JCR-1,3,6,7 ..... C1-28
AR22JCY-1,3,6,7 ..... C1-28
AR22M0L,M5L C1-17
AR22M0R,M3R,M4R,M5R,M8R,M9R ... C1-20

AR22M4L,M9L C1-17
AR22M4P C1-19
AR22M4Y C1-21
AR22PCR-1,3,6,7 ..... C1-28
AR22PCR-4,5 ..... C1-31
AR22PCY-1,3,6,7 ..... C1-28
AR22PCY-4,5 ..... C1-31
AR22PL-0,2,3,6,7 ..... C1-32
AR22PR-0,2 ..... C1-25
AR22PR-1,3,6,7 ..... C1-26

AR22PY-0,2 ..... C1-25
AR22PY-1,3,6,7 ..... C1-26
AR22Q2R C1-23
AR22RCR-1,3,6,7 ..... C1-28
AR22RCR-4,5 ..... C1-31

AR22RCY-1,3,6,7 ..... C1-28
AR22RCY-4,5 ..... C1-31
AR22RR-0,2 ..... C1-25
AR22RR-0,2,3,6,7 ..... C1-32
AR22RR-1,3,6,7 ..... C1-26
AR22RY-0,2 ..... C1-25
AR22RY-1,3,6,7 ..... C1-26
AR22S1R,S2R,S3R,S6R C1-22
AR22V0L,V2L C1-23
AR22V0R,V2R,V4R,V7R C1-23

AR22V3R C1-124
AR22V5L C1-18
AR22V5R C1-20
AR22VAL,VGF,VQL,VSL C1-24
AR22VDL C1-23
AR22VGE C1-23
AR22VPR C1-23
AR22VQR C1-23
AR22VSR C1-23
AR22WCR-1,3,6,7 ..... C1-28

AR22WCR-4,5 ..... C1-31
AR22WCY-1,3,6,7 ..... C1-28
AR22WCY-4,5 ..... C1-31
AR22WR-0,2 ..... C1-25
AR22WR-1,3,6,7 ..... C1-26
AR22WY-0,2 ..... C1-25
AR22WY-1,3,6,7 ..... C1-26
AR23FAR,FBR C1-20
AR24E0R,E0S C1-20
AR25E5R,E5S C1-20

AR26EAR,EBR C1-20
AR30A0H,A0N C1-94
AR30A1H,A1N C1-94
AR30A2H,A2N C1-94
AR30A5H,A5N C1-94
AR30A6H,A6N C1-94
AR30A7H,A7N C1-94
AR30B0R,B1R,B2R C1-75
AR30B3R C1-76
AR30E0L,E5L C1-73

AR30E0R,E5R C1-75
AR30EAR,EBR C1-75
AR30F0R,F5R C1-75
AR30FAR,FBR C1-75
AR30FVR C1-76
AR30G0R,G1R,G5R,G6R C1-75
AR30G2L,G3L,G4L,G7L,G8L,G9L ... C1-73
AR30GPR,GSR C1-75
AR30JCR-1,3,6,7 ..... C1-83
AR30M0R,M3R,M4R,M8R C1-75

AR30N0R C1-76
AR30PCR-1,3,6,7 ..... C1-83
AR30PCR-4,5 ..... C1-86
AR30PL-0,2,3,6,7 ..... C1-89
AR30PR-1,2 ..... C1-80
AR30PR-1,3,6,7 ..... C1-81
AR30Q2R C1-78
AR30Q7L C1-73
AR30S1R,S2R,S3R,S6R C1-77
AR30V0L,V2L C1-79

AR30V0R,V1R,V2R C1-78
AR30V5L C1-73
AR30V5R C1-76
AR30VPL C1-79
AR30VPR C1-78

AR30WCR-1,3,6,7 ..... C1-83
AR30WCR-4,5 ..... C1-86
AR30WR-0,2 ..... C1-80
AR30WR-1,3,6,7 ..... C1-81
AR6C631,632,633 ..... C1-182
AR6C662 ..... C1-182
AR6P665,666,667 ..... C1-182
AR6P719 ..... C1-187
AR6S690,691,692 ..... C1-180
AR6Y261 ..... C1-179

AR6Y262 ..... C1-187
AR9A001,002,004,006 ..... C1-112
AR9A701 ..... C1-112
AR9B290,291,292 ..... C1-121
AR9C001,003 to 008 ..... C1-118
AR9C010 to 021 ..... C1-118
AR9C022,025 ..... C1-119
AR9C024,026 to 029 ..... C1-118
AR9C040,041 ..... C1-118
AR9D001,002 ..... C1-121

AR9D797 ..... C1-122
AR9E538 ..... C1-113
AR9E760 ..... C1-113
AR9L002 ..... C1-120
AR9M005 ..... C1-119
AR9M006,007,008 ..... C1-118
AR9N001 ..... C1-120
AR9P001,002,003 ..... C1-119
AR9P007 to 012 ..... C1-116
AR9P014,015 ..... C1-116

AR9P711,712,719 ..... C1-115
AR9P721 ..... C1-124
AR9R001,002 ..... C1-122
AR9R008 ..... C1-124
AR9R744 ..... C1-122
AR9T001,002,003 ..... C1-122
AR9T511,577 ..... C1-121
AR9T519 ..... C1-122
AR9Y002 ..... C1-113
AR9Y003,004,008 ..... C1-114

AR9Y305 ..... C1-123
AR9Y715,718 ..... C1-113
AR9Y730 ..... C1-123
AU-CW21B1 ..... D1-231,258
AUX014 ..... D1-231
AUX-3 ..... E1-28
AUX-4 ..... E1-28
AUX-7 ..... E1-29
AUX-8 ..... E1-29
AXH668,669,671 ..... C1-179

AXH822,826 ..... C1-179
AYBN C1-283
AYBS C1-285

B

B-43A B1-91,178
Ba B2-28

BLA B2-28
BLC B2-33
BM3RHB A2-3
BM3RHBK A2-5
BM3RSB A2-3

Alphabetical Type Index

BM3VHB....A2-4
BM3VHBK....A2-5
BM3VSB....A2-4
BRR....B1-215,217
BW □ Z....D1-249
BW100....B1-7,13,20,29
BW125....B1-8,14,21,D1-249
BW160....B1-9,29
BW250....B1-10,15,21,D1-249
BW32....B1-4,18,29

BW32SBG....B1-181,202
BW400....B1-11,16,29,D1-249
BW50....B1-5,13,19,29
BW50EBG....B1-181,202
BW50RBGU....B1-182,205
BW50SBG....B1-181,202
BW63....B1-6,20,29
BW630....B1-12,17,31,D1-249
BW63EBG....B1-181,202
BW63SBG....B1-181,202

BW800....B1-12,17,31,D1-249
BW9BPBA....B1-201
BW9BPCA....B1-91,178
BW9BPGA....B1-91,178
BW9BTAA....B1-90,177
BW9BTBA....B1-201
BW9BTCA....B1-90,177
BW9BTGA....B1-90,177
BW9BTHA....B1-90,177
BW9BTJA....B1-90,177

BW9F0....B1-80,167
BW9F1G0....B1-73,160
BW9F6B1....B1-192,201
BW9FAG0....B1-73,160
BW9FBG0....B1-73,160
BW9FH....B1-73,160
BW9FJG0....B1-73,160
BW9FKB1....B1-192,201
BW9FKG0....B1-73,160
BW9FPB1....B1-192,201

BW9FPG0....B1-73,160
BW9FRB1....B1-192,201
BW9FRG0....B1-73,160
BW9FSG0....B1-73,160
BW9K1DB1....B1-192,201
BW9K1DG0....B1-73,160
BW9K1DHA....B1-73,160
BW9K1SB1....B1-192,201
BW9K1SG0....B1-73,160
BW9K1SHA....B1-73,160

BW9K2....B1-73,160
BW9L1BA....B1-201
BW9L1CA....B1-92,179
BW9L1HA....B1-92,179
BW9L1SGA....B1-160
BW9M1....B1-75,162
BW9N0BA....B1-201
BW9N0CA....B1-80,167
BW9N0GA....B1-80,167
BW9N0HA....B1-80,167

BW9N0JA....B1-80,167
BW9Q1CA....B1-92,179
BW9Q2BA....B1-201
BW9Q2CA....B1-92,179
BW9Q2GA....B1-92,179
BW9Q2HA....B1-92,179
BW9Q2JA....B1-92,179
BW9QNHA....B1-92,179
BW9R....B1-73,160
BW9S....B1-24,116
BW9U....B1-88,175
BW9V0BA....B1-201
BW9V0CA....B1-80,167
BW9V0GA....B1-80,167
BW9V0HA....B1-80,167

BW9V0JA....B1-80,167
BW9VSG0....B1-84,171
BW9W1DB1....B1-192,201
BW9W1DG0....B1-73,160
BW9W1DHA....B1-73,160
BW9W1SB1....B1-192,201
BW9W1SG0....B1-73,160
BW9W1SHA....B1-73,160
BW9W2....B1-73,160
BW9WK1....B1-73,160

BW9WKDB1....B1-192,201
BW9WKDG0....B1-73,160
BW9WKSB1....B1-192,201
BW9WKSG0....B1-73,160
BZ0BC....A2-19
BZ0BF....A2-19
BZ0BP....A2-27
BZ0BR....A2-19
BZ0BV....A2-19
BZ0CFG....A2-10

BZ0F....A2-9,11
BZ0KI....A2-8,11
BZ0LRK....A2-27,93
BZ0LVE....A2-27
BZ0R....A2-9,10,11
BZ0SET....A2-10
BZ0SET....D1-243
BZ0T....A2-9,10,11
BZ0V....A2-10
BZ0WI....A2-8,9,11

BZ6B10C....B1-91,178
BZ6BL10C....B1-91,178
BZ6C10C....B1-88,175
BZ6C25C....B1-88,175
BZ6F....B1-72,159
BZ6K....B1-72,159
BZ6L....B1-92,179
BZ6M....B1-75,162
BZ6N....B1-80,167
BZ6R....B1-72,159

BZ6S....B1-24,116
BZ6V....B1-80,167
BZ6W....B1-72,159
BZ-C60B....B1-88,175
BZ-C70B....B1-88,175
BZ-S50B....B1-24

C

CC2....D1-158,168
CC2B....D1-255
CC2C....D1-256
CC2D....D1-243,255,256
CC3....D1-158,159
CD32,34,36....D1-158,174
CE....E1-41
CEA1-6M....E1-39
CEC1-6M....E1-39
CED....E1-47
CH5....D1-266
CN226....D1-151
CN227....D1-154,155
CN2340,CN2341....D1-157
CN5....D1-139

CP30F....B2-1
CP31....B2-7
CP31D....B2-7
CP32D....B2-7
CP31E....B2-21
CP32E....B2-21
CP33E....B2-21
CP34E....B2-21
CP31P....B2-10
CP32P....B2-10

CP33P....B2-10
CP31V....B2-21
CP32V....B2-21
CP33V....B2-21
CP34V....B2-21
CP51B....B2-16
CP52B....B2-16
CP53B....B2-16
CP-S □....B2-23
CP-T1....B2-8

CP-T2....B2-8
CP-T3....B2-23
CR2L....B2-33,34
CR2LS....B2-33,34
CR6L....B2-33,34
CRX-1....B2-34
CS □ F....B2-34
CU1F....D2-65
CU3F....D2-71
CY3....D2-82

D

DF16F0L,F0M,F0N....C1-136,163
DM....D1-55
DN6Q005....C1-120
DN7C001....C1-252
DN7H001....C1-253
DN7P002 to 006....C1-252

DN7Q001....C1-254
DN7Q003....C1-256
DN7Q004....C1-255
DN7Y001....C1-253
DN7Y020....C1-253
DN8C001....C1-252
DN8P002 to 006....C1-252
DN8Q001....C1-254
DN8Q003....C1-256
DN8Q004....C1-255

DN8Y001....C1-253
DR16D0L....C1-136,151
DR16E0L....C1-136,151
DR16F0M,F0N....C1-151
DR16F0N,F0M....C1-136

DR22B5,B8 ..... C1-39
DR22D0L C1-34,35,36
DR22E3L,E3M,E3N,E3P C1-34,35,36
DR22F3M,F4M,F5M C1-34,35,36
DR22K0L C1-34,35,36
DR30B5,B6,B8 ..... C1-95
DR30D0L C1-91,92
DR30D1L C1-91,92
DR30E3L C1-91,92
DR30F4M,F4N C1-93

DR30K0L C1-91,92
DR6C630 ..... C1-182
DR6L695 ..... C1-182
DR9C001,002 ..... C1-118
DR9C120,121,122 ..... C1-118
DR9C126,127 ..... C1-118
DR9P001 ..... C1-119
DR9P241,242,243,244 ..... C1-119
DR9Y001,004 ..... C1-117
DR9Y320,321 ..... C1-123

E

EL B1-216,220,221
EW100 ..... B1-99,105,112,121
EW125 ..... B1-100,106,113,121
EW160 ..... B1-101,121
EW250 ..... B1-102,107,113,121
EW32 ..... B1-96,110,121

EW32SBG B1-183,208
EW400 ..... B1-103,108,122
EW50 ..... B1-97,105,111,121
EW50EBG B1-183,208
EW50RBGU B1-185,211
EW50SBG B1-183,208
EW63 ..... B1-98,112,121
EW630 ..... B1-104,109,122
EW63EBG B1-184,208
EW63SBG B1-184,208

EW800 ..... B1-104,122
EW-Z □ D1-252

F

FC A1-80,125,127,132
FCF B2-31
FCK B2-31

FFT D2-73
FH E1-28
FMN D1-52
F-MPC I/O unit D1-247
F-MPC Web unit D1-225
F-MPC04 ..... D1-229,231
F-MPC04E D1-229,243
F-MPC04P D1-229,236
F-MPC04S D1-229,240
F-MPC30 ..... D1-199,219

F-MPC60B D1-199,212
F-MPC60G D1-199,201
FR-80AS E2-34
FRN D1-51,52,53
FSN D1-51

FW A1-86
FW- □ /3H A1-83
FW- □ C/3H A1-83
G .....
GLI-3G E2-23,33,54
GLI-6G E2-23,33,54
GPE E1-48
GVE E1-48

H

HA E2-1,24,27,50
HF E1-11,17,18
HF E2-70
HFB E1-11,18
HH22,23,24 ..... C2-41
HH52,53,54 ..... C2-25
HH62,63,64 ..... C2-37

HI E1-9
HK244 ..... C3-1
HK244 ..... C3-18
HN46A E2-65
HS E2-1,5
HZ1AD E2-69
HZ1N E2-71
HZ2A E2-33,54

J

JB E2-70
JC E2-70
JC-6 ..... E1-29
JR E1-11,18

K

K244 ..... C3-1
K244 ..... C3-11,12,13,14,15,16,17

L

L-2HNB E2-12,33,54,71
L-2HS40E,43E E2-12
LB-6 ..... E1-27,30
LB-LH E1-28
LBS-6A E1-27,30
LBS-AD1 ..... E1-29
LT2E C1-289
LT4D C1-286
LT5D C1-294
LT5S C1-294

LT95S C1-294
LT9D C1-286
LT9E C1-286

M

ML3C2954 ..... D2-37
MS4SA,SC C2-51,53
MS4SF C2-51,55
MS4SM C2-51,53
MS4SR C2-51,57
MS4SY C2-51,55

N

NCE2-6B E1-39
NPE12 ..... E1-40
NS387 ..... C1-280

P

Pa B2-28
PE E1-40
PE1-C,Y C3-24
PE2-C C3-35
PE2-LA10D,D2 ..... C3-40
PE-B C3-28
PEC2 ..... E1-40
PE-G4D C3-39
PE-T C3-32
PE-U C3-23

PE-X15D C3-31
PE-X3D C3-38
PH1C C3-46
PH1C C3-48
PH8AU C3-47
PM1U C3-42
PX1-C,P C3-25

Q

QC06E,12E D1-184
QE-20N A1-58
QHA E2-74
QL-11 ..... D1-268
QL-21B,21F D1-274
QL-30B,31B D1-270
QL-30P D1-272

QL-51F D1-276

R

R □ B2-28
R290 ..... E1-9,28
R293B E1-9,28
R293X E1-9,28

RB104,105 ..... C2-15
RC15-6C E1-39
RC310 ..... C1-274,280
RF240c E1-2
RF248 ..... E1-27,31

Alphabetical Type Index

RF250 ..... E1-27,31
RM112 ..... D1-252
RNFDS D2-44
RNFHA D2-52
RNFM1 ..... D2-57
RNFMC D2-49,57
RNFMS D2-55
RNFT D2-63,57
RNFTC D2-46,57
RNFTD D2-44,57

RNFTS D2-55
RPAE D2-38,40
RPD001 ..... D2-29,37
RPDE D2-23
RPDW D2-31
RPM003 ..... D2-3
RPME D2-3
RPN001 ..... D2-3,17
RPN002 ..... D2-3
RPNE D2-8

RPNW D2-9
RPWE D2-5
RRD B1-215,218
RS16 ..... C2-18
RS16-DE04H D1-231,257
RS4A,6A,16A C2-22
RS4D,6D,16D C2-22
RS4N □ C2-16
RS6N C2-16
RZ4N C2-23

RZ62,64 ..... C2-38

S

SB- □ /UL A1-123
SB- □ N A1-78
SB- □ NB A1-78
SB-4064-23 ..... D1-176

SB-N2 ..... A1-78,123
SB-N2/G A1-78
SB-N2/SE A1-78,123
SB-N2B A1-78
SC- □ A1-25,119,127,131
SC- □ /G A1-41,119,127,131
SC- □ /SE A1-41,119,131
SC- □ /U A1-47,132
SC- □ /V A1-48
SC- □ /VG A1-48

SC- □ H A1-64,132
SC- □ HRM A1-132
SC- □ RM A1-34,121,131
SC- □ RM/G A1-131
SC- □ RM/SE A1-131
SC- □ RM/U A1-132
SC- □ Y A1-65
SC-11N A1-78
SC-E □ A2-100,105
SC-E □ /G A2-100,105

SC-E □ P A2-103
SC-E □ P/G A2-103
SC-E □ PRM A2-108
SC-E □ PRM/G A2-108
SC-E □ RM A2-101

SC-E □ RM/G A2-102
SCF E1-11,17
SCH E1-17
SH-4,5 ..... A1-133
SH-4,5 ..... C2-1,3,8,9
SH-4/G C2-6,8,9
SH-4/U,5/U C2-9,13
SH-4/V,5/V C2-11
SH-4H C2-3,9
SH-4Y C2-14

SH-5/G C2-6,8,9
SK □ A A2-65,66
SK □ AH A2-65,66
SK □ AHR A2-69,70
SK □ AR A2-69,70
SK □ G A2-65,66
SK □ GH A2-65,66
SK □ GHR A2-69,70
SK □ GR A2-69,70
SK □ L A2-65,66

SK □ LH A2-65,66
SK □ LHR A2-69,70
SK □ LR A2-69,70
SK06 ..... A2-42,43
SK09 ..... A2-42,43
SK092L A2-75
SK12 ..... A2-42,43
SK121L A2-74
SK12EL A2-73
SK12FL A2-73

SK12L A2-65
SK18 ..... A2-42,43
SK22 ..... A2-42,43
SK32 ..... A2-42,43
SKH4 ..... A2-43,95
SKT-J C1-287
SP-4D E1-29
SS03 to SS120 ..... A1-106,107,108
SS101 to SS2001 ..... A1-105
SS30H to SS120H A1-107,108

SS701 to SS2001 ..... A1-105
SS701H to SS2001H A1-106
ST7B C2-60,61
ST7P C2-51,60,61
SW- □ A1-122
SW- □ /2E A1-57,58,120,121
SW- □ /3H A1-20,25,120
SW- □ /3L A1-53
SW- □ /3Q A1-55
SW- □ /G2E A1-120

SW- □ /G3H A1-41,120
SW- □ /SE2E A1-120
SW- □ /SE3H A1-41,120
SW- □ /U3H A1-47
SW- □ C/2E A1-57
SW- □ C/3H A1-25
SW- □ LG/3H A1-62
SW- □ P/3H A1-60
SW- □ PB/3H A1-60
SW- □ RM/3H A1-34,121

SW- □ RMC/3H A1-34
SW- □ Y/3H A1-65
SX1 ..... A1-126,130
SY-F-A □ /M A1-67
SZ □ DE A1-46,68

SZ-03/CD2-24 ..... A1-66,70
SZ-03/CD2-24 ..... C2-2
SZ1DE20 ..... C2-2,10
SZ1FA A2-81
SZ1K26 ..... A2-88
SZ1KA A2-81
SZ1KL A2-88
SZ1KR A2-85
SZ1KRW1M A2-93
SZ1KZ A2-88

SZ-A A1-66,69,124,128
SZ-A A2-81
SZ-A □ A1-69
SZ-A □ C2-2,9
SZ-A □ /T A2-107
SZ-A □ Y A1-65,66
SZ-AS3H A1-69
SZ-B □ A1-68,75
SZ-CD A1-66,70
SZ-CD1 ..... C2-2

SZ-D A2-124
SZ-DA A1-89,124
SZ-EPRW A2-108
SZ-ERW A2-108
SZ-H A2-124
SZ-H □ A1-89,124
SZ-JC C2-2
SZ-JC □ A1-68,76
SZ-JW □ A1-68,76
SZ-L A2-124

SZ-L □ A1-89
SZ-N □ J A1-68,76
SZ-N □ RT A1-67,74,75
SZ-N □ T A1-67,74,75,124
SZ-R A2-90,124
SZ-R □ A1-89,124
SZ-RM A1-66,123
SZ-RM A2-85,108
SZ-RN6T A1-68,74,89,124
SZ-RW A1-66,73

SZ-RW A2-85
SZ-SP A1-63,66
SZ-T □ A1-67,68,74,89,124
SZ-T □ C2-2
SZ-W □ J A1-68,76
SZ-WN11T A1-67,74,75
SZ-WZ11T A1-124
SZ-Z A2-107
SZ-Z □ A1-67,71,124
SZ-ZM A1-66,72,124

SZ-ZM A2-86,107
SZ-ZMH A1-72

T

TK- □ A1-102,122,127,133
TK12 ..... A2-76
TK13 ..... A1-122,127

TK25 ..... A2-76
TK26 ..... A1-122,127
TK26 ..... A2-76
TK26E A2-122,123
TK-E □ A2-122,123

TP41,48 ..... C2-59
TP58,511,514 ..... C2-30
TP61,68 ..... C2-38
TP814,88 ..... C2-61
TR- □ A1-87,122,127,133
TR1-70R/UL D2-17
TR3-300R/UL D2-17
TX01,16,18,19 ..... C2-30
TX4 ..... C2-59
TZ1H □ N. A1-89,124

TZ1H12N A2-91
TZ1H26E A2-124
TZ1H26N A2-91

U

UM02 ..... D1-229,236
UM03 ..... D1-229,240

UM04 ..... D1-229,231
UM05 ..... D1-229,243
UM11 ..... D1-247
UM12 ..... D1-225
UM2P-A1 ..... E2-34
UM43FG D1-199,212
UM5ACG D1-199,219
UM63FN D1-199,201

V

V- □ E1-2
V3- □ E1-2
VC-1A E2-12,23,33,54,71
VCB-T1 ..... E2-12,33,54
VCB-T2 ..... E2-12,33,54
VS-T1A E2-69
VS-T2A E2-69

W

WA21 ..... D1-265
WA4 ..... D1-259
WA9 ..... D1-261
WE1B D1-37
WE1C D1-37
WE1GL D1-30

WE1MA D1-10
WE1MB D1-21
WE1RL D1-43
WE1SA D1-26
WE1SV D1-26
WF D1-111
WK244 ..... C3-1
WK244 ..... C3-18
WM8N D1-1
WM9N D1-9

WS2 ..... D1-59
WS3 ..... D1-81
WS4 ..... D1-83
WS5MT D1-105
WS5PD D1-106

Z

ZCT E2-77
ZPD-2 ..... E2-77

Magnetic Contactors and Starters
Thermal Overload Relays, Solid-state Contactors

A

Page

Magnetic Contactors and Starters

SC and SW series standard type
General information A1-1
Versions A1-2
Quick selection guide
Non reversing, Open type A1-4
Enclosed type A1-9
Reversing, Open type A1-12
Enclosed type A1-15
Type number nomenclature A1-17
Ordering code system A1-18
Specifications A1-20
Standard type A1-25
Reversing standard type A1-34
DC operated A1-41
OFF-delay release A1-46
With extra pick-up operating coil A1-47
Mechanical latch contactors A1-48
Heavy starting duty starters A1-53
With quick operating overload relay A1-55
With phase-loss protective device A1-56
With phase-loss and phase-sequence protective device A1-58
Enclosed with pushbuttons A1-60
Dust-tight/light-corrosion resistance A1-62
For single-phase resistance load A1-63
With single button auxiliary contact A1-64
With quick connection terminals A1-65
Optional unit A1-66

DC Magnetic Contactors

SB series A1-77

Magnetic Contactors and Starters

FC and FW series
FC series A1-80
Ordering code system A1-81
FW series A1-83
FW series with pushbuttons A1-86

Thermal Overload Relays

TR series A1-87
TK series A1-102

Solid-state Contactors

SS series A1-104

Magnetic Contactors and Starters

UL and CSA approved A1-119
TÜV approved A1-127
CCC approved A1-131

MINIMUM ORDERS

Orders amounting to **less than ¥10,000** net per order will be charged as ¥10,000 net per order plus freight and other charges.

WEIGHTS AND DIMENSIONS

Weights and dimensions appearing in this catalog are the best information available at the time of going to press. FUJI ELECTRIC FA has a policy of continuous product improvement, and design changes may make this information out of date.
Please confirm such details before planning actual construction.

INFORMATION IN THIS CATALOG IS SUBJECT TO CHANGE WITHOUT NOTICE.

Magnetic Contactors and Starters
General information

FUJI low-voltage contactors and starters are available in a broad choice of types, from high-performance to economy, for all consumer and industrial needs. For standard applications, we offer the high-performance SC series. We offer the economical F series for light industrial use, the SB series dedicated to DC circuits, and the SS series with long service-life noise-free solid-state contactors.

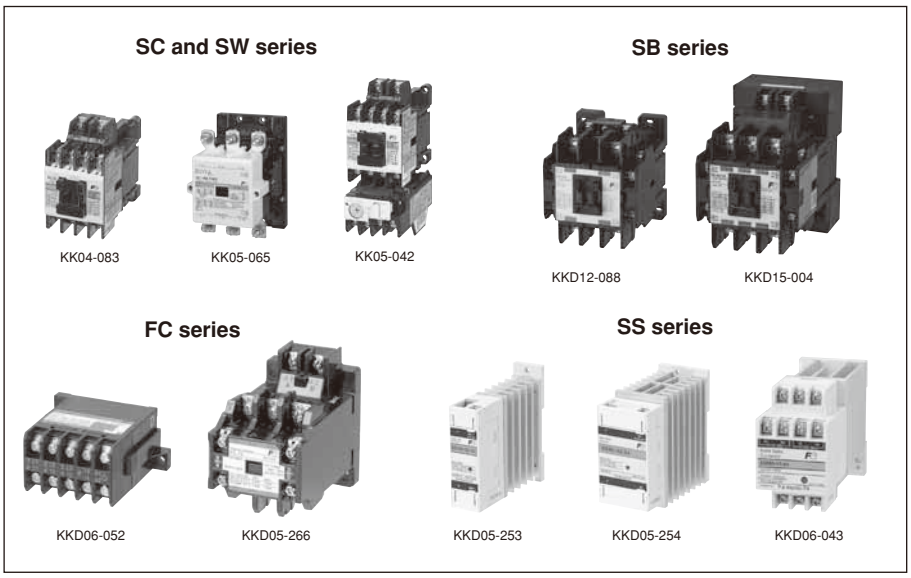

SC and SW series

Standard type magnetic contactors and starters

The SC series is a range of long service-life and high-performance contactors. SC-03 to SC-N3 small-frame contactors provide snap-on fitting of numerous optional units, such as auxiliary contact blocks, coil surge suppressors, and operation counters.
Field modifications are quick and easy to make.
Type SC-N6 and above contactors come with an IC-controlled SUPER MAGNET coil, which operates from both AC and DC sources, to eliminate burnt coils and contact chattering caused by voltage fluctuation.

SB series

DC magnetic contactors

We developed the SB series DC contactors from our SC series AC contactors. Applications include opening and closing DC circuits and controlling DC motors. They permit switching of DC loads up to 550V DC, 360A. There are two main contact arrangements available: the 2NO type and the 2NO + 1NC type, which has one NC contact for dynamic brake circuits. Type SB-5N and above contactors come with an IC-controlled SUPER MAGNET coil for improved operational stability.

FC and FW series

Definite purpose contactors and starters

The FC series contactors are compact and economical contactors designed for use in consumer appliances with relatively low switching frequencies. Typical applications include air conditioners, industrial washing machines, heaters, compressors, driers, and fans. Contactor pickup voltage is 75% of the rated voltage. FC-0 is available with tab and printed board terminals, as well as with self-lifting screw terminals.

SS series

Solid-state contactors

The SS series contactors employ a semiconductor that can withstand both high voltage and large overcurrent when making and breaking load circuits. The completely contactless design gives high performance, including long service life and noise-free operation. Applications include frequent making and breaking for motors, heaters, and similar circuits.
A built-in surge absorbing varistor and CR circuit to protect the SSC from surges when switching inductive loads, and surges from external circuits.

DUO series

BM3 series manual motor starters, SK and SC-E series magnetic contactors

In addition to the five basic concepts of the existing SC series of magnetic contactors and motor starters — international standardization, compactness, safety, utility, and ecology — the SK and SC-E series take the line-up to the next step in utility with a new finger protection terminal and box lug terminal construction.

Magnetic Contactors and Starters
SC and SW series Versions

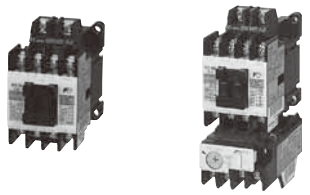
KK05-042

Standard type contactors and starters

Standard type is usually used to start and stop motors, and to open and close resistance loads like heaters or electric furnaces.
See page A1-25.

KK05-067

Contactors and starters with SUPER MAGNET

IC operated SUPER MAGNET prevents coil burning and contact welding due to voltage fluctuations
See page A1-25.

KKD18-026

Enclosed type starters

Standard type starter are housed in a protective enclosure.
See page A1-33.

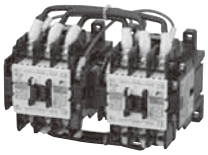
KKD17-115

Reversing contactors and starters

This type is most suitable for reversing operation of 3-phase motors or plugging or braking.
See page A1-34.

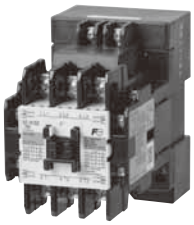
KKD06-026

DC-operated contactors and starters

Main circuit is AC, and operation is carried out by DC operating coil. This type is useful for applications in which control power source is independent.
See page A1-41.

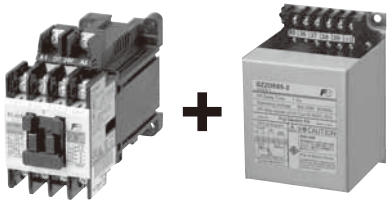
KKD05-270 KKD16-110

OFF-delay release contactors and starters

This is a combination of DC-operated magnetic contactor and off-delay release unit. This prevents circuit opening due to instantaneous voltgage drops.
See page A1-46.

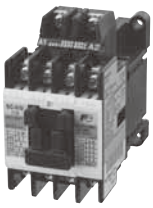
KKD11-016

With extra pickup operating coil

These contactors are suitable for use in places with poor power supply conditions. These contactors operate normally even if the coil input voltage falls to 75% of the coil rated voltage.
See page A1-47.

AF88-1353

Mechanical latch contactors

Latch mechanism prevents the circuit from opening due to power failure, instantaneous power failure, or voltage drop of power source. This is suitable for change-over circuit and stand-by power supply equipment.
See page A1-48.

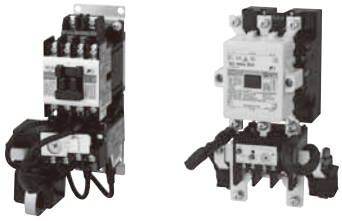
KKD09-115 KKD09-129

Heavy starting duty starters

This is suitable for overload protection or stall prevention of motors with longer starting times such as those for blowers and fans having a large inertia.
See page A1-53.

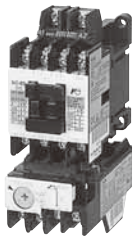
KK05-042

Starters with quick-operating overload relay

With the attached quick operating type O/L relay, this is suitable for protecting submersible pumps or compressor motors with a small heat capacity.
See page A1-55.

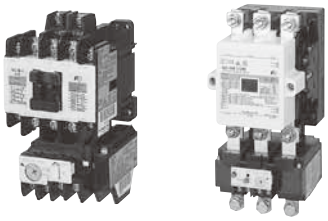
KK05-047 KK05-057

Starters with phase-loss protective device

The attached 2E thermal O/L relay protects against motor overload and as well as phase-loss.
See page A1-56.

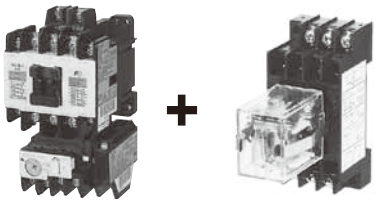
KK05-047 SP-1075

Starters with phase-loss and phase-sequence protective device

By combining 2E thermal O/L relay and phase-sequence relay, motor overload, phase-loss and phase-sequence protection is obtained.
See page A1-58.

KKD06-010

Starters with on-off and RESET pushbuttons

Pushbuttons for close and open are built in the enclosure. Suitable for simple operations.
See page A1-60.

KKD18-027

Dush-tight/light-corrosion resistant type starters

The enclosure is dust-tight and corrosion-proof, and so is suitable for locations with dusty or corrosive atmospheres.
See page A1-62.

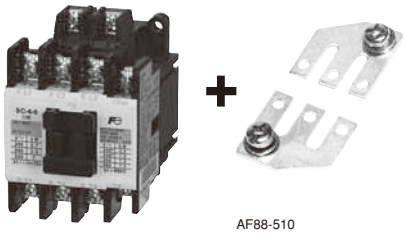
AF88-510

Contactors for single-phase

resistance load

This is a standard type magnetic contactor with a 3-phase parallel plate terminal. This is most suitable for on-off operation of electric heaters, water heaters and electric lights.
See page A1-63.

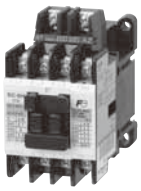
KKD06-036

With single-button auxiliary contacts

An auxiliary contact of a standard contactor is bifurcated. All SC-03H to SC-N12H contactor, however, feature single-button auxiliary contacts with a higher current rating than the contacts used by the standard contactor.
See page A1-64.

AF95-240

With quick connection terminals

No removing terminal screw is required. When contactor and starters with the quick connection terminals are shipped, these screws are inserted in the terminals section but make no contact. It reduces the number of wiring steps. Terminals with finger protection enable a high level of safety.
See page A1-65.

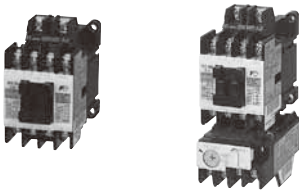
KK05-042

UL, CSA, TÜV and CCC approved motor starters and contactors

Many models of SC series conform to UL, CSA, TÜV and CCC requirements.
See page A1-119.

Magnetic Contactors and Starters
SC and SW series Quick selection guide/Open type

■ Types and ratings/Non-reversing, Open

Frame size		03	0	05	4-0	Further information
Max. motor capacity (kW) AC-3, IEC 60947-4-1	200–240V	2.5	3.5	3.5	4.5	
	380–440V	4	5.5	5.5	7.5	
	500–550V	4	5.5	5.5	7.5	
	600–660V	4	5.5	5.5	7.5	
Operational current (A)	200–240V	11	13	13	18	
	380–440V	9	12	12	16	
	500–550V	7	9	9	13	
	600–660V	5	7	7	9	
Operational current (A)	AC-1	20	20	20	25	
Conventional free air thermal current (A)		20	20	20	25	
Auxiliary contact arrangement		1NO 1NC	1NO 1NC	1NO+1NC 2NO, 2NC	1NO 1NC	
Standard	Contactor Starter	**SC-03** **SW-03/3H**	**SC-0** **SW-0/3H**	**SC-05** **SW-05/3H**	**SC-4-0** **SW-4-0/3H**	*Page A1-25*
DC operated	Contactor Starter	**SC-03/G** **SW-03/G3H**	**SC-0/G** **SW-0/G3H**	**SC-05/G** **SW-05/G3H**	**SC-4-0/G** **SW-4-0/G3H**	*Page A1-41*
OFF-delay release *1	Contactor Starter	**SC-03/G+SZ1DE20** **SW-03/G3H+ SZ1DE20**	**SC-0/G+SZ1DE20** **SW-0/G3H+ SZ1DE20**	**SC-05/G+SZ1DE20** **SW-05/G3H+ SZ1DE20**	**SC-4-0/G+SZ1DE20** **SW-4-0/G3H+ SZ1DE20**	*Page A1-46*
With extra pick-up operating coil	Contactor Starter	**SC-03/U** **SW-03/U3H**	**SC-0/U** **SW-0/U3H**	**SC-05/U** **SW-05/U3H**	**SC-4-0/U** **SW-4-0/U3H**	*Page A1-47*
Mechanical latch AC operated	Contactor Starter	**SC-03/V** –	**SC-0/V** –	**SC-05/V** –	**SC-4-0/V** –	*Page A1-48*
Mechanical latch DC operated	Contactor Starter	**SC-03/VG** –	**SC-0/VG** –	**SC-05/VG** –	**SC-4-0/VG** –	*Page A1-48*
Heavy starting duty	Contactor Starter	– **SW-03/3L**	– **SW-0/3L**	– **SW-05/3L**	– **SW-4-0/3L**	*Page A1-53*
With quick operating overload relay	Contactor Starter	– **SW-03/3Q**	– **SW-0/3Q**	– **SW-05/3Q**	– **SW-4-0/3Q**	*Page A1-55*
With phase-loss protective device	Contactor Starter	– **SW-03/2E**	– **SW-0/2E**	– **SW-05/2E**	– **SW-4-0/2E**	*Page A1-56*
With phase-loss and phase sequence protective device *2	Contactor Starter	– **SW-03/2E+QE-□0N**	– **SW-0/2E+QE-□0N**	– **SW-05/2E+QE-□0N**	– **SW-4-0/2E+QE-□0N**	*Page A1-58*
For single-phase resistance load	Contactor Starter	**SC-03+SZ-SP1** –	**SC-0+SZ-SP1** –	**SC-05+SZ-SP1** –	**SC-4-0+SZ-SP2** –	*Page A1-63*
With quick counection terminals	Contactor starter	**SC-03Y** **SW-03Y**	**SC-0Y** **SW-0Y**	**SC-05Y** **SW-05Y**	– –	Page A1-65
Thermal overload relay On-contactor mounting						*Page A1-87*
Standard		**TR-0N/3**	**TR-0N/3**	**TR-0N/3**	**TR-5-1N/3**	
Long time operation		**TR-0NL/3**	**TR-0NL/3**	**TR-0NL/3**	**TR-5-1NL/3**	
Quick operation		**TR-0NQ**	**TR-0NQ**	**TR-0NQ**	**TR-5-1NQ**	
Phase-loss protection		**TK-0N**	**TK-0N**	**TK-0N**	**TK-5-1N**	

Note: *1 Replace the □ mark in the type number by the operating voltage code.
100V AC: 100, 110V AC: 110, 200V AC: 200, 220V AC: 220
*2 Replace the □ mark in the type number by the operating voltage code.
200-220V AC: 2, 380-415V AC: 4

■ Types and ratings/Non-reversing, Open

Frame size		4-1	5-1	N1	N2	Further information
Max. motor capacity (kW) AC-3, IEC 60947-4-1	200–240V	5.5	5.5	7.5	11	
	380–440V	11	11	15	18.5	
	500–550V	11	11	15	18.5	
	600–660V	7.5	7.5	11	15	
Operational current (A)	200–240V	22	22	32	40	
	380–440V	22	22	32	40	
	500–550V	17	17	24	29	
	600–660V	9	9	15	19	
Operational current (A)	AC-1	32	32	50	60	
Conventional free air thermal current (A)		32	32	50	60	
Auxiliary contact arrangement		1NO 1NC	1NO+1NC, 2NO 2NO+2NC, 2NC	2NO+2NC 4NO+4NC	2NO+2NC 4NO+4NC	
Standard	Contactor	**SC-4-1**	**SC-5-1**	**SC-N1**	**SC-N2**	*Page A1-25*
	Starter	**SW-4-1/3H**	**SW-5-1/3H**	**SW-N1/3H**	**SW-N2/3H**	
DC operated	Contactor	**SC-4-1/G**	**SC-5-1/G**	**SC-N1/G**	**SC-N2/G**	*Page A1-41*
	Starter	**SW-4-1/G3H**	**SW-5-1/G3H**	**SW-N1/G3H**	**SW-N2/G3H**	
OFF-delay release *1	Contactor	**SC-4-1/G+SZ1DE20**	**SC-5-1/G+SZ1DE20**	**SC-N1/G+ SZ2DE35**	**SC-N2/G+ SZ2DE35**	*Page A1-46*
	Starter	**SW-4-1/G3H+ SZ1DE20**	**SW-5-1/G3H+ SZ1DE20**	**SW-N1/G3H+ SZ2DE35**	**SW-N2/G3H+ SZ2DE35**	
With extra pick-up operating coil	Contactor	**SC-4-1/U**	**SC-5-1/U**	**SC-N1/U**	**SC-N2/U**	*Page A1-47*
	Starter	**SW-4-1/U3H**	**SW-5-1/U3H**	**SW-N1/U3H**	**SW-N2/U3H**	
Mechanical latch AC operated	Contactor	**SC-4-1/V**	**SC-5-1/V**	**SC-N1/VS**	**SC-N2/VS**	*Page A1-48*
	Starter	–	–	–	–	
Mechanical latch DC operated	Contactor	**SC-4-1/VG**	**SC-5-1/VG**	**SC-N1/VS**	**SC-N2/VS**	*Page A1-48*
	Starter	–	–	–	–	
Heavy starting duty	Contactor	–	–	–	–	*Page A1-53*
	Starter	**SW-4-1/3L**	**SW-5-1/3L**	**SW-N1/3L**	**SW-N2/3L**	
With quick operating overload relay	Contactor	–	–	–	–	*Page A1-55*
	Starter	**SW-4-1/3Q**	**SW-5-1/3Q**	**SW-N1/3Q**	**SW-N2/3Q**	
With phase-loss protective device	Contactor	–	–	–	–	*Page A1-56*
	Starter	**SW-4-1/2E**	**SW-5-1/2E**	**SW-N1/2E**	**SW-N2/2E**	
With phase-loss and phase sequence protective device *2	Contactor	–	–	–	–	*Page A1-58*
	Starter	**SW-4-1/2E+QE-□0N**	**SW-5-1/2E+QE-□0N**	**SW-N1/2E+QE-□0N**	**SW-N2/2E+QE-□0N**	
For single-phase resistance load	Contactor	**SC-4-1+SZ-SP2**	**SC-5-1+SZ-SP2**	**SC-N1+SZ-SP3**	**SC-N2+SZ-SP3**	*Page A1-63*
	Starter	–	–	–	–	
With quick counection terminals	Contactor	–	**SC-5-1Y**	–	–	*Page A1-65*
	starter	–	**SW-5-1Y**	–	–	
Thermal overload relay On-contactor mounting						*Page A1-87*
Standard		**TR-5-1N/3**	**TR-5-1N/3**	**TR-N2/3**	**TR-N2/3**	
Long time operation		**TR-5-1NL/3**	**TR-5-1NL/3**	**TR-N2L/3**	**TR-N2L/3**	
Quick operation		**TR-5-1NQ**	**TR-5-1NQ**	**TR-N2Q**	**TR-N2Q**	
Phase-loss protection		**TK-5-1N**	**TK-5-1N**	**TK-N2**	**TK-N2**	

Note: *1 Replace the □ mark in the type number by the operating voltage code.
100V AC: 100, 110V AC: 110, 200V AC: 200, 220V AC: 220
*2 Replace the □ mark in the type number by the operating voltage code.
200-220V AC: 2, 380-415V AC: 4

Magnetic Contactors and Starters
SC and SW series Quick selection guide/Open type

■ Types and ratings/Non-reversing, Open

Frame size		N2S	N3	N4	N5A	Further information
Max. motor capacity (kW) AC-3, IEC 60947-4-1	200–240V	15	18.5	22	30	
	380–440V	22	30	40	55	
	500–550V	25	37	37	55	
	600–660V	22	30	37	55	
Operational current (A)	200–240V	50	65	80	105	
	380–440V	50	65	80	105	
	500–550V	38	60	60	85	
	600–660V	26	38	44	64	
Operational current (A)	AC-1	80	100	135	150	
Conventional free air thermal current (A)		80	100	135	150	
Auxiliary contact arrangement		2NO+2NC 4NO+4NC	2NO+2NC 4NO+4NC	2NO+2NC 4NO+4NC	2NO+2NC 4NO+4NC	
Standard	Contactor	**SC-N2S**	**SC-N3**	**SC-N4**	**SC-N5A**	*Page A1-25*
	Starter	**SW-N2S/3H**	**SW-N3/3H**	**SW-N4/3H**	**SW-N5A/3H**	
DC operated	Contactor	**SC-N2S/G**	**SC-N3/G**	**SC-N4/G**	**SC-N5/G**	*Page A1-41*
	Starter	**SW-N2S/G3H**	**SW-N3/G3H**	**SW-N4/G3H**	**SW-N5/G3H**	
OFF-delay release	Contactor	**SC-N2S/G+ SZ2DE65**	**SC-N3/G+ SZ2DE65**	**SC-N4/SE+ SZ-N5/DE**	**SC-N5+ SZ-N5/DE**	*Page A1-46*
	Starter	**SW-N2S/G3H+ SZ2DE65**	**SW-N3/G3H+ SZ2DE65**	**SW-N4/SE3H+ SZ-N5/DE**	**SW-N5/3H+ SZ-N5/DE**	
With extra pick-up operating coil *1	Contactor	**SC-N2S/U**	**SC-N3/U**	**SC-N4/U**	–	*Page A1-47*
	Starter	**SW-N2S/U3H**	**SW-N3/U3H**	**SW-N4/U3H**	–	
Mechanical latch AC operated	Contactor	**SC-N2S/VS**	**SC-N3/VS**	**SC-N4/VS**	**SC-N5/VS**	*Page A1-48*
	Starter	–	–	–	–	
Mechanical latch DC operated	Contactor	**SC-N2S/VS**	**SC-N3/VS**	**SC-N4/VS**	**SC-N5/VS**	*Page A1-48*
	Starter	–	–	–	–	
Heavy starting duty	Contactor	–	–	–	–	*Page A1-53*
	Starter	**SW-N2S/3L**	**SW-N3/3L**	**SW-N4/3L**	**SW-N5A/3L**	
With quick operating overload relay	Contactor	–	–	–	–	*Page A1-55*
	Starter	**SW-N2S/3Q**	**SW-N3/3Q**	**SW-N4/3Q**	**SW-N5A/3Q**	
With phase-loss protective device	Contactor	–	–	–	–	*Page A1-56*
	Starter	**SW-N2S/2E**	**SW-N3/2E**	**SW-N4/2E**	**SW-N5A/2E**	
With phase-loss and phase sequence protective device *2	Contactor	–	–	–	–	*Page A1-58*
	Starter	**SW-N2S/2E+QE-□0N**	**SW-N3/2E+QE-□0N**	**SW-N4/2E+QE-□0N**	**SW-N5A/2E+QE-□0N**	
For single-phase resistance load	Contactor	**SC-N2S+SZ-SP4**	**SC-N3+SZ-SP4**	**SC-N4+SZ-SP5**	**SC-N5A+SZ-SP5**	*Page A1-63*
	Starter	–	–	–	–	
Thermal overload relay On-contactor mounting						*Page A1-87*
Standard		**TR-N3/3**	**TR-N3/3**	**TR-N5/3**	**TR-N5/3**	
Long time operation		**TR-N3L/3**	**TR-N3L/3**	**TR-N5L/3**	**TR-N5L/3**	
Quick operation		**TR-N3Q**	**TR-N3Q**	**TR-N5Q**	**TR-N5Q**	
Phase-loss protection		**TK-N3**	**TK-N3**	**TK-N5**	**TK-N5**	

Note: *1 The standard types for frame sizes N6 and above (with SUPER MAGNET) hold without chattering even if the line voltage drops to 65% of its rated value.
*2 Replace the □ mark in the type namber by the operating voltage code.
200-220V AC: 2, 380-415V AC: 4

Fuji Electric FA Components & Systems Co., Ltd.
Information subject to change without notice

■ Types and ratings/Non-reversing, Open

Frame size		N6	N7	N8	N10	Further information
Max. motor capacity (kW) AC-3, CEC 60947-4-1	200–240V 380–440V	37 60	45 75	55 90	65 110	
	500–550V 600–660V	60 60	75 90	130 132	132 132	
Operational current (A)	200–240V 380–440V	125 125	150 150	180 180	220 220	
	500–550V 600–660V	90 72	120 103	180 150	200 150	
Operational current (A)	AC-1	150	200	260	260	
Conventional free air thermal current (A)		150	200	260	260	
Auxiliary contact arrangement		2NO+2NC 4NO+4NC	2NO+2NC 4NO+4NC	2NO+2NC 4NO+4NC	2NO+2NC 4NO+4NC	
Standard	Contactor Starter	**SC-N6** **SW-N6/3H**	**SC-N7** **SW-N7/3H**	**SC-N8** **SW-N8/3H**	**SC-N10** **SW-N10/3H**	*Page A1-25*
DC operated	Contactor Starter	**SC-N6** **SW-N6/3H**	**SC-N7** **SW-N7/3H**	**SC-N8** **SW-N8/3H**	**SC-N10** **SW-N10/3H**	*Page A1-41*
OFF-delay release	Contactor Starter	**SC-N6+SZ-N6/DE** **SW-N6/3H+ SZ-N6/DE**	**SC-N7+SZ-N6/DE** **SW-N7/3H+ SZ-N6/DE**	**SC-N8+SZ-N8/DE** **SW-N8/3H+ SZ-N8/DE**	**SC-N10+SZ-N8/DE** **SW-N10/3H+ SZ-N8/DE**	*Page A1-46*
With extra pick-up operating coil *1	Contactor Starter	– –	– –	– –	– –	– –
Mechanical latch/ AC operated	Contactor Starter	**SC-N6/VS** –	**SC-N7/VS** –	**SC-N8/VS** –	**SC-N10/VS** –	*Page A1-48*
Mechanical latch/ DC operated	Contactor Starter	**SC-N6/VS** –	**SC-N7/VS** –	**SC-N8/VS** –	**SC-N10/VS** –	*Page A1-48*
Heavy starting duty	Contactor Starter	– **SW-N6/3L**	– **SW-N7/3L**	– **SW-N8/3L**	– **SW-N10/3L**	*Page A1-53*
With quick operating overload relay	Contactor Starter	– –	– –	– –	– –	*Page A1-55*
With phase-loss protective device	Contactor Starter	– **SW-N6/2E**	– **SW-N7/2E**	– **SW-N8/2E**	– **SW-N10/2E**	*Page A1-56*
With phase-loss and phase sequence protective device *2	Contactor Starter	– **SW-N6/2E+QE-□0N**	– **SW-N7/2E+QE-□0N**	– **SW-N8/2E+QE-□0N**	– **SW-N10/2E+QE-□0N**	*Page A1-58*
For single-phase resistance load	Contactor Starter	**SC-N6+SZ-SP7** –	**SC-N7+SZ-SP7** –	**SC-N8+SZ-SP8** –	**SC-N10+SZ-SP8** –	*Page A1-63*
Thermal overload relay On-contactor mounting						*Page A1-87*
Standard		**TR-N6/3**	**TR-N7/3**	**TR-N8/3**	**TR-N10/3**	
Long time operation		**TR-N6L/3**	**TR-N7L/3**	**TR-N10L/3**	**TR-N10L/3**	
Quick operation		–	–	–	–	
Phase-loss protection		**TK-N6**	**TK-N7**	**TK-N8**	**TK-N10**	

Note: *1 The standard types for frame sizes N6 and above (with SUPER MAGNET) hold without chattering even if the line voltage drops to 65% of its rated value.
*2 Replace the □ mark in the type namber by the operating voltage code.
200-220V AC: 2, 380-415V AC: 4

Magnetic Contactors and Starters
SC and SW series Quick selection guide/Open type

■ Types and ratings/Non-reversing, Open

Frame size		N11	N12	N14	N16	Further information
Max. motor capacity (kW) AC-3, IEC 60947-4-1	200–240V	90	120	180	220	
	380–440V	160	220	315	440	
	500–550V	160	250	400	500	
	600–660V	200	300	480	500	
Operational current (A)	200–240V	300	400	600	800	
	380–440V	300	400	600	800	
	500–550V	230	360	600	720	
	600–660V	230	360	600	630	
Operational current (A)	AC-1	350	450	660	800	
Conventional free air thermal current (A)		350	450	660	800	
Auxiliary contact arrangement		2NO+2NC 4NO+4NC	2NO+2NC 4NO+4NC	2NO+2NC 4NO+4NC	2NO+2NC 4NO+4NC	
Standard	Contactor	**SC-N11**	**SC-N12**	**SC-N14**	**SC-N16**	*Page*
	Starter	**SW-N11/3H**	**SW-N12/3H**	**SW-N14/3H**	–	*A1-25*
DC operated	Contactor	**SC-N11**	**SC-N12**	**SC-N14**	**SC-N16**	*Page*
	Starter	**SW-N11/3H**	**SW-N12/3H**	**SW-N14/3H**	–	*A1-41*
OFF-delay release	Contactor	**SC-N11+SZ-N11/DE**	**SC-N12+SZ-N11/DE**	**SC-N14+SZ-N14/DE**	–	*Page*
	Starter	**SW-N11/3H+ SZ-N11/DE**	**SW-N12/3H+ SZ-N11/DE**	**SW-N14/3H+ SZ-N14/DE**	–	*A1-46*
With extra pick-up operating coil *1	Contactor	–	–	–	–	–
	Starter	–	–	–	–	–
Mechanical latch AC operated	Contactor	**SC-N11/VS**	**SC-N12/VS**	**SC-N14/VS**	–	*Page*
	Starter	–	–	–	–	*A1-48*
Mechanical latch DC operated	Contactor	**SC-N11/VS**	**SC-N12/VS**	**SC-N14/VS**	–	*Page*
	Starter	–	–	–	–	*A1-48*
Heavy starting duty	Contactor	–	–	–	–	*Page*
	Starter	**SW-N11/3L**	**SW-N12/3L**	**SW-N14/3L**	–	*A1-53*
With quick operating overload relay	Contactor	–	–	–	–	–
	Starter	–	–	–	–	–
With phase-loss protective device	Contactor	–	–	–	–	*Page*
	Starter	**SW-N11/2E**	**SW-N12/2E**	**SW-N14/2E**	–	*A1-56*
With phase-loss and phase sequence protective device *2	Contactor	–	–	–	–	*Page*
	Starter	**SW-N11/2E+QE-□0N**	**SW-N12/2E+QE-□0N**	**SW-N14/2E+QE-□0N**	–	*A1-58*
For single-phase resistance load	Contactor	**SC-N11+SZ-SP9**	**SC-N12+SZ-SP9**	**SC-N14+SZ-SP10**	**SC-N16+SZ-SP10**	*Page*
	Starter	–	–	–	–	*A1-63*
Thermal overload relay On-contactor mounting						*Page A1-87*
Standard		**TR-N12/3**	**TR-N12/3**	**TR-N14/3**	–	
Long time operation		**TR-N12L/3**	**TR-N12L/3**	**TR-N14L/3**	–	
Quick operation		–	–	–	–	
Phase-loss protection		**TK-N12**	**TK-N12**	**TK-N14**	–	

Note: *1 The standard types for frame sizes N6 and above (with SUPER MAGNET) hold without chattering even if the line voltage drops to 65% of its rated value.
*2 Replace the □ mark in the type namber by the operating voltage code.
200-220V AC: 2, 380-415V AC: 4

■ Types and ratings/Non-reversing, Enclosed

Frame size		03	0	05	4-0	Further information
Max. motor capacity (kW) AC-3, IEC 60947-4-1	200–240V	2.5	3.5	3.5	4.5	
	380–440V	4	5.5	5.5	7.5	
	500–550V	4	5.5	5.5	7.5	
	600–660V	4	5.5	5.5	7.5	
Operational current (A)	200–240V	11	13	13	18	
	380–440V	9	12	12	16	
	500–550V	7	9	9	13	
	600–660V	5	7	7	9	
Operational current (A)	AC-1	20	20	20	25	
Conventional free air thermal current (A)		20	20	20	25	
Auxiliary contact arrangement		1NO 1NC	1NO 1NC	1NO+1NC 2NO, 2NC	1NO 1NC	
Standard	Contactor	**SC-03C**	**SC-0C**	**SC-05C**	**SC-4-0C**	*Page A1-25*
	Starter	**SW-03C/3H**	**SW-0C/3H**	**SW-05C/3H**	**SW-4-0C/3H**	
With extra pick-up operating coil	Contactor	–	–	–	–	*Page A1-47*
	Starter	**SW-03C/U3H**	**SW-0C/U3H**	**SW-05C/U3H**	**SW-4-0C/U3H**	
With phase-loss protective device	Contactor	–	–	–	–	*Page A1-56*
	Starter	**SW-03C/2E**	**SW-0C/2E**	**SW-05C/2E**	**SW-4-0C/2E**	
With ON-OFF/reset pushbuttons	Contactor	–	–	–	–	*Page A1-60*
	Starter	**SW-03P/3H**	**SW-0P/3H**	**SW-05P/3H**	**SW-4-0P/3H**	
Dust tight/light corrosion resistant	Contactor	–	–	–	–	*Page A1-62*
	Starter	**SW-03LG/3H**	**SW-0LG/3H**	**SW-05LG/3H**	**SW-4-0LG/3H**	
Thermal overload relay		*See page A1-12.* Same as the open types				*Page A1-87*

Frame size		4-1	5-1	N1	N2	Further information
Max. motor capacity (kW) AC-3, IEC 60947-4-1	200–240V	5.5	5.5	7.5	11	
	380–440V	11	11	15	18.5	
	500–550V	11	11	15	18.5	
	600–660V	7.5	7.5	11	15	
Operational current (A)	200–240V	22	22	32	40	
	380–440V	22	22	32	40	
	500–550V	17	17	24	29	
	600–660V	9	9	15	19	
Operational current (A)	AC-1	32	32	50	60	
Conventional free air thermal current (A)		32	32	50	60	
Auxiliary contact arrangement		1NO 1NC	1NO+1NC 2NO, 2NC	2NO+2NC 4NO+4NC	2NO+2NC 4NO+4NC	
Standard	Contactor	**SC-4-1C**	**SC-5-1C**	**SC-N1C**	**SC-N2C**	*Page A1-25*
	Starter	**SW-4-1C/3H**	**SW-5-1C/3H**	**SW-N1C/3H**	**SW-N2C/3H**	
With extra pick-up operating coil	Contactor	–	–	–	–	*Page A1-47*
	Starter	**SW-4-1C/U3H**	**SW-5-1C/U3H**	**SW-N1C/U3H**	**SW-N2C/U3H**	
With phase-loss protective device	Contactor	–	–	–	–	*Page A1-56*
	Starter	**SW-4-1C/2E**	**SW-5-1C/2E**	**SW-N1C/2E**	**SW-N2C/2E**	
With ON-OFF pushbuttons	Contactor	–	–	–	–	*Page A1-60*
	Starter	–	–	**SW-N1P/3H**	**SW-N2P/3H**	
With ON-OFF/reset pushbuttons	Contactor	–	–	–	–	*Page A1-60*
	Starter	**SW-4-1P/3H**	**SW-5-1P/3H**	**SW-N1PB/3H**	**SW-N2PB/3H**	
Dust tight/light corrosion resistant	Contactor	–	–	–	–	*Page A1-62*
	Starter	**SW-4-1LG/3H**	**SW-5-1LG/3H**	**SW-N1LG/3H**	**SW-N2LG/3H**	
Thermal overload relay		*See page A1-12.* Same as the open types				*Page A1-87*

Magnetic Contactors and Starters
SC and SW series Quick selection guide/Enclosed type

■ Types and ratings/Non-reversing, Enclosed

Frame size		N2S	N3	N4	N5A	Further information
Max. motor capacity (kW) AC-3, IEC 60947-4-1	200–240V	15	18.5	22	30	
	380–440V	22	30	40	55	
	500–550V	25	37	37	55	
	600–660V	22	30	37	55	
Operational current (A)	200–240V	50	65	80	105	
	380–440V	50	65	80	105	
	500–550V	38	60	60	85	
	600–660V	26	38	44	64	
Operational current (A)	AC-1	80	100	135	150	
Conventional free air thermal current (A)		80	100	135	150	
Auxiliary contact arrangement		2NO+2NC 4NO+4NC	2NO+2NC 4NO+4NC	2NO+2NC 4NO+4NC	2NO+2NC 4NO+4NC	
Standard	Contactor	**SC-N2SC**	**SC-N3C**	**SC-N4C**	**SC-N5AC**	*Page A1-25*
	Starter	**SW-N2SC/3H**	**SW-N3C/3H**	**SW-N4C/3H**	**SW-N5AC/3H**	
With extra pick-up operating coil *	Contactor	–	–	–	–	*Page A1-47*
	Starter	**SW-N2SC/U3H**	**SW-N3C/U3H**	**SW-N4C/SE3H**	–	
With phase-loss protective device	Contactor	–	–	–	–	*Page A1-56*
	Starter	**SW-N2SC/2E**	**SW-N3C/2E**	**SW-N4C/2E**	**SW-N5AC/2E**	
With ON-OFF pushbuttons	Contactor	–	–	–	–	*Page A1-60*
	Starter	**SW-N2SP/3H**	**SW-N3P/3H**	–	–	
With ON-OFF and reset pushbuttons	Contactor	–	–	–	–	*Page A1-60*
	Starter	**SW-N2SPB/3H**	**SW-N3PB/3H**	**SW-N4PB/3H**	**SW-N5PB/3H**	
Dust tight/light corrosion resistant	Contactor	–	–	–	–	*Page A1-62*
	Starter	**SW-N2SLG/3H**	**SW-N3LG/3H**	**SW-N4LG/3H**	**SW-N5ALG/3H**	
Thermal overload relay		*See page A1-13.* Same as the open types				*Page A1-87*

Frame size		N6	N7	N8	N10	Further information
Max. motor capacity (kW) AC-3, IEC 60947-4-1	200–240V	37	45	55	65	
	380–440V	60	75	90	110	
	500–550V	60	75	130	132	
	600–660V	60	90	132	132	
Operational current (A)	200–240V	125	150	180	220	
	380–440V	125	150	180	220	
	500–550V	90	120	180	200	
	600–660V	72	103	150	150	
Operational current (A)	AC-1	150	200	260	260	
Conventional free air thermal current (A)		150	200	260	260	
Auxiliary contact arrangement		**2NO+2NC** **4NO+4NC**	**2NO+2NC** **4NO+4NC**	**2NO+2NC** **4NO+4NC**	**2NO+2NC** **4NO+4NC**	
Standard	Contactor	**SC-N6C**	**SC-N7C**	**SC-N8C**	**SC-N10C**	*Page A1-25*
	Starter	**SW-N6C/3H**	**SW-N7C/3H**	**SW-N8C/3H**	**SW-N10C/3H**	
With extra pick-up operating coil *	Contactor	–	–	–	–	–
	Starter	–	–	–	–	–
With phase-loss protective device	Contactor	–	–	–	–	*Page A1-56*
	Starter	**SW-N6C/2E**	**SW-N7C/2E**	**SW-N8C/2E**	**SW-N10C/2E**	
With ON-OFF pushbuttons	Contactor	–	–	–	–	–
	Starter	–	–	–	–	–
With ON-OFF and reset pushbuttons	Contactor	–	–	–	–	*Page A1-60*
	Starter	**SW-N6PB/3H**	–	**SW-N8PB/3H**	**SW-N10PB/3H**	
Dust tight/light corrosion resistant	Contactor	–	–	–	–	*Page A1-62*
	Starter	**SW-N6LG/3H**	**SW-N7LG/3H**	**SW-N8LG/3H**	**SW-N10LG/3H**	
Thermal overload relay		*See page A1-13.* Same as the open types				*Page A1-87*

Note: * The standard types for frame sizes N6 and above (with SUPER MAGNET) hold without chattering even if the line voltage drops to 65% of its rated value.

■ Types and ratings/Non-reversing, Enclosed

Frame size		N11	N12	N14	N16	Further information
Max. motor capacity (kW) AC-3, IEC 60947-4-1	200–240V	90	120	180	–	
	380–440V	160	220	315	–	
	500–550V	160	250	400	–	
	600–660V	200	300	480	–	
Operational current (A)	200–240V	300	400	600	–	
	380–440V	300	400	600	–	
	500–550V	230	360	600	–	
	600–660V	230	360	600	–	
Operational current (A)	AC-1	350	450	660	–	
Conventional free air thermal current (A)		350	450	660	–	
Auxiliary contact arrangement		2NO+2NC 4NO+4NC	2NO+2NC 4NO+4NC	2NO+2NC 4NO+4NC	– –	
Standard	Contactor	**SC-N11C**	**SC-N12C**	–	–	*Page A1-25*
	Starter	**SW-N11C/3H**	**SW-N12C/3H**	–	–	
With extra pick-up operating coil *	Contactor	–	–	–	–	–
	Starter	–	–	–	–	–
With phase-loss protective device	Contactor	–	–	–	–	*Page A1-56*
	Starter	**SW-N11C/2E**	**SW-N12C/2E**	–	–	
With ON-OFF pushbuttons	Contactor	–	–	–	–	–
	Starter	–	–	–	–	–
With ON-OFF and reset pushbuttons	Contactor	–	–	–	–	–
	Starter	–	–	–	–	–
Dust tight/light corrosion resistant	Contactor	–	–	–	–	–
	Starter	–	–	–	–	–
Thermal overload relay		*See page A1-14.* Same as the open types				*Page A1-87*

Note: * The standard types for frame sizes N6 and above (with SUPER MAGNET) hold without chattering even if the line voltage drops to 65% of its rated value.

Magnetic Contactors and Starters
SC and SW series Quick selection guide/Reversing, Open type

■ Types and ratings/Reversing, Open

Frame size		03	0	05	4-0	Further information
Max. motor capacity (kW) AC-3, IEC 60947-4-1	200–240V	2.5	3.5	3.5	4.5	
	380–440V	4	5.5	5.5	7.5	
	500–550V	4	5.5	5.5	7.5	
	600–660V	4	5.5	5.5	7.5	
Operational current (A)	200–240V	11	13	13	18	
	380–440V	9	12	12	16	
	500–550V	7	9	9	13	
	600–660V	5	7	7	9	
Conventional free air thermal current (A)		20	20	20	25	
Auxiliary contact arrangement		1NC×2 1NO×2	1NC×2 1NO×2	(1NO+1NC)×2 2NC×2	1NC×2 1NO×2	
Standard	Contactor	**SC-03RM**	**SC-0RM**	**SC-05RM**	**SC-4-0RM**	*Page*
	Starter	**SW-03RM/3H**	**SW-0RM/3H**	**SW-05RM/3H**	**SW-4-0RM/3H**	*A1-34*
DC operated	Contactor	**SC-03RM/G**	**SC-0RM/G**	**SC-05RM/G**	**SC-4-0RM/G**	*Contact*
	Starter	**SW-03RM/G3H**	**SW-0RM/G3H**	**SW-05RM/G3H**	**SW-4-0RM/G3H**	*FUJI*
Mechanical latch AC operated	Contactor	**SC-03RM/V**	**SC-0RM/V**	**SC-05RM/V**	**SC-4-0RM/V**	*Page*
	Starter	–	–	–	–	*A1-48*
Mechanical latch DC operated	Contactor	**SC-03RM/VG**	**SC-0RM/VG**	**SC-05RM/VG**	**SC-4-0RM/VG**	*Page*
	Starter	–	–	–	–	*A1-48*
With phase-loss protective device	Contactor	–	–	–	–	*Page*
	Starter	**SW-03RM/2E**	**SW-0RM/2E**	**SW-05RM/2E**	**SW-4-0RM/2E**	*A1-56*
Thermal overload relay On-contactor mounting						*Page*
						A1-87
Standard		**TR-0N/3**	**TR-0N/3**	**TR-0N/3**	**TR-5-1N/3**	
Phase-loss protection		**TK-0N**	**TK-0N**	**TK-0N**	**TK-5-1N**	

Frame size		4-1	5-1	N1	N2	Further information
Max. motor capacity (kW) AC-3, IEC 60947-4-1	200–240V	5.5	5.5	7.5	11	
	380–440V	11	11	15	18.5	
	500–550V	11	11	15	18.5	
	600–660V	7.5	7.5	11	15	
Operational current (A)	200–240V	22	22	32	40	
	380–440V	22	22	32	40	
	500–550V	17	17	24	29	
	600–660V	9	9	15	19	
Conventional free air thermal current (A)		32	32	50	60	
Auxiliary contact arrangement		1NC×2 1NO×2	(1NO+1NC)×2,2NC×2 (2NO+2NC)×2	(2NO+2NC)×2 (3NO+3NC)×2	(2NO+2NC)×2 (3NO+3NC)×2	
Standard	Contactor	**SC-4-1RM**	**SC-5-1RM**	**SC-N1RM**	**SC-N2RM**	*Page*
	Starter	**SW-4-1RM/3H**	**SW-5-1RM/3H**	**SW-N1RM/3H**	**SW-N2RM/3H**	*A1-34*
DC operated	Contactor	**SC-4-1RM/G**	**SC-5-1RM/G**	**SC-N1RM/G**	**SC-N2RM/G**	*Contact*
	Starter	**SW-4-1RM/G3H**	**SW-5-1RM/G3H**	**SW-N1RM/G3H**	**SW-N2RM/G3H**	*FUJI*
Mechanical latch AC operated	Contactor	**SC-4-1RM/V**	**SC-5-1RM/V**	**SC-N1RM/VS**	**SC-N2RM/VS**	*Page*
	Starter	–	–	–	–	*A1-48*
Mechanical latch DC operated	Contactor	**SC-4-1RM/VG**	**SC-5-1RM/VG**	**SC-N1RM/VS**	**SC-N2RM/VS**	*Page*
	Starter	–	–	–	–	*A1-48*
With phase-loss protective device	Contactor	–	–	–	–	*Page*
	Starter	**SW-4-1RM/2E**	**SW-5-1RM/2E**	**SW-N1RM/2E**	**SW-N2RM/2E**	*A1-56*
Thermal overload relay On-contactor mounting						*Page*
						A1-87
Standard		**TR-5-1N/3**	**TR-5-1N/3**	**TR-N2/3**	**TR-N2/3**	
Phase-loss protection		**TK-5-1N**	**TK-5-1N**	**TK-N2**	**TK-N2**	

Note: Auxiliary contact arrangements indicate the ones for types except mechanical latch types.

■ Types and ratings/Reversing, Open

Frame size		N2S	N3	N4	N5A	Further information
Max. motor capacity (kW) AC-3, IEC 60947-4-1	200–240V	15	18.5	22	30	
	380–440V	22	30	40	55	
	500–550V	25	37	37	55	
	600–660V	22	30	37	55	
Operational current (A)	200–240V	50	65	80	105	
	380–440V	50	65	80	105	
	500–550V	38	60	60	85	
	600–660V	26	38	44	64	
Conventional free air thermal current (A)		80	100	135	150	
Auxiliary contact arrangement		(2NO+2NC)×2 (3NO+3NC)×2	(2NO+2NC)×2 (3NO+3NC)×2	(2NO+2NC)×2 (3NO+3NC)×2	(2NO+2NC)×2 (3NO+3NC)×2	
Standard	Contactor	**SC-N2SRM**	**SC-N3RM**	**SC-N4RM**	**SC-N5ARM**	*Page*
	Starter	**SW-N2SRM/3H**	**SW-N3RM/3H**	**SW-N4RM/3H**	**SW-N5ARM/3H**	*A1-34*
DC operated	Contactor	**SC-N2SRM/G**	**SC-N3RM/G**	**SC-N4RM/G**	**SC-N5RM/G**	*Contact*
	Starter	**SW-N2SRM/G3H**	**SW-N3RM/G3H**	**SW-N4RM/G3H**	**SW-N5RM/G3H**	*FUJI*
Mechanical latch AC operated	Contactor	**SC-N2SRM/VS**	**SC-N3RM/VS**	**SC-N4RM/VS**	**SC-N5RM/VS**	*Page*
	Starter	–	–	–	–	*A1-48*
Mechanical latch DC operated	Contactor	**SC-N2SRM/VS**	**SC-N3RM/VS**	**SC-N4RM/VS**	**SC-N5RM/VS**	*Page*
	Starter	–	–	–	–	*A1-48*
With phase-loss protective device	Contactor	–	–	–	–	*Page*
	Starter	**SW-N2SRM/2E**	**SW-N3RM/2E**	**SW-N4RM/2E**	**SW-N5ARM/2E**	*A1-56*
Thermal overload relay On-contactor mounting						*Page A1-87*
Standard		**TR-N3/3**	**TR-N3/3**	**TR-N5/3**	**TR-N5/3**	
Phase-loss protection		**TK-N3**	**TK-N3**	**TK-N5**	**TK-N5**	

Frame size		N6	N7	N8	N10	Further information
Max. motor capacity (kW) AC-3, IEC 60947-4-1	200–240V	37	45	55	65	
	380–440V	60	75	90	110	
	500–550V	60	75	130	132	
	600–660V	60	90	132	132	
Operational current (A)	200–240V	125	150	180	220	
	380–440V	125	150	180	220	
	500–550V	90	120	180	200	
	600–660V	72	103	150	150	
Conventional free air thermal current (A)		150	200	260	260	
Auxiliary contact arrangement		(2NO+2NC)×2 (3NO+3NC)×2	(2NO+2NC)×2 (3NO+3NC)×2	(2NO+2NC)×2 (3NO+3NC)×2	(2NO+2NC)×2 (3NO+3NC)×2	
Standard	Contactor	**SC-N6RM**	**SC-N7RM**	**SC-N8RM**	**SC-N10RM**	*Page*
	Starter	**SW-N6RM/3H**	**SW-N7RM/3H**	**SW-N8RM/3H**	**SW-N10RM/3H**	*A1-34*
DC operated	Contactor	**SC-N6RM**	**SC-N7RM**	**SC-N8RM**	**SC-N10RM**	*Contact*
	Starter	**SW-N6RM/3H**	**SW-N7RM/3H**	**SW-N8RM/3H**	**SW-N10RM/3H**	*FUJI*
Mechanical latch AC operated	Contactor	**SC-N6RM/VS**	**SC-N7RM/VS**	**SC-N8RM/VS**	**SC-N10RM/VS**	*Page*
	Starter	–	–	–	–	*A1-48*
Mechanical latch DC operated	Contactor	**SC-N6RM/VS**	**SC-N7RM/VS**	**SC-N8RM/VS**	**SC-N10RM/VS**	*Page*
	Starter	–	–	–	–	*A1-48*
With phase-loss protective device	Contactor	–	–	–	–	*Page*
	Starter	**SW-N6RM/2E**	**SW-N7RM/2E**	**SW-N8RM/2E**	**SW-N10RM/2E**	*A1-56*
Thermal overload relay On-contactor mounting						*Page A1-87*
Standard		**TR-N6/3**	**TR-N7/3**	**TR-N8/3**	**TR-N10/3**	
Phase-loss protection		**TK-N6**	**TK-N7**	**TK-N8**	**TK-N10**	

Note: Auxiliary contact arrangements indicate the ones for types except mechanical latch types.

Magnetic Contactors and Starters
SC and SW series Quick selection guide/Reversing, Open type

■ Types and ratings/Reversing, Open

Frame size		N11	N12	N14	N16	Further information
Max. motor capacity (kW) AC-3, IEC 60947-4-1	200–240V	90	120	180	–	
	380–440V	160	220	315	–	
	500–550V	160	250	400	–	
	600–660V	200	300	480	–	
Operational current (A)	200–240V	300	400	600	–	
	380–440V	300	400	600	–	
	500–550V	230	360	600	–	
	600–660V	230	360	600	–	
Conventional free air thermal current (A)		350	450	660	–	
Auxiliary contact arrangement		(2NO+2NC)×2 (3NO+3NC)×2	(2NO+2NC)×2 (3NO+3NC)×2	(2NO+2NC)×2 (3NO+3NC)×2	– –	
Standard	Contactor	**SC-N11RM**	**SC-N12RM**	**SC-N14RM**	–	*Page*
	Starter	**SW-N11RM/3H**	**SW-N12RM/3H**	**SW-N14RM/3H**	–	*A1-34*
DC operated	Contactor	**SC-N11RM**	**SC-N12RM**	**SC-N14RM**	–	*Contact*
	Starter	**SW-N11RM/3H**	**SW-N12RM/3H**	**SW-N14RM/3H**	–	*FUJI*
Mechanical latch AC operated	Contactor	**SC-N11RM/VS**	**SC-N12RM/VS**	**SC-N14RM/VS**	–	*Page*
	Starter	–	–	–	–	*A1-48*
Mechanical latch DC operated	Contactor	**SC-N11RM/VS**	**SC-N12RM/VS**	**SC-N14RM/VS**	–	*Page*
	Starter	–	–	–	–	*A1-48*
With phase-loss protective device	Contactor	–	–	–	–	*Page*
	Starter	**SW-N11RM/2E**	**SW-N12RM/2E**	**SW-N14RM/2E**	–	*A1-56*
Thermal overload relay On-contactor mounting						*Page A1-87*
Standard		**TR-N11/3**	**TR-N12/3**	**TR-N14/3**	–	
Phase-loss protection		**TK-N11**	**TK-N12**	**TK-N14**	–	

Note: Auxiliary contact arrangements indicate the ones for types except mechanical latch types.

■ Types and ratings/Reversing, Enclosed

Frame size		03	0	05	4-0	Further information
Max. motor capacity (kW) AC-3, IEC 60947-4-1	200–240V	2.5	3.5	3.5	4.5	
	380–440V	4	5.5	5.5	7.5	
	500–550V	4	5.5	5.5	7.5	
	600–660V	4	5.5	5.5	7.5	
Operational current (A)	200–240V	11	13	13	18	
	380–440V	9	12	12	16	
	500–550V	7	9	9	13	
	600–660V	5	7	7	9	
Conventional free air thermal current (A)		20	20	20	25	
Auxiliary contact arrangement		1NC×2 1NO×2	1NC×2 1NO×2	(1NO+1NC)×2 2NC×2	1NC×2 1NO×2	
Standard	Contactor	**SC-03RMC**	**SC-0RMC**	**SC-05RMC**	**SC-4-0RMC**	*Page A1-34*
	Starter	**SW-03RMC/3H**	**SW-0RMC/3H**	**SW-05RMC/3H**	**SW-4-0RMC/3H**	
With phase-loss protective device	Contactor	–	–	–	–	*Page A1-56*
	Starter	**SW-03RMC/2E**	**SW-0RMC/2E**	**SW-05RMC/2E**	**SW-4-0RMC/2E**	
With ON-OFF pushbuttons	Contactor	–	–	–	–	–
	Starter	–	–	–	–	–
Thermal overload relay On-contactor mounting						*Page A1-87*
Standard		**TR-0N/3**	**TR-0N/3**	**TR-0N/3**	**TR-5-1N/3**	
Phase-loss protection		**TK-0N**	**TK-0N**	**TK-0N**	**TK-5-1N**	

Frame size		4-1	5-1	N1	N2	Further information
Max. motor capacity (kW) AC-3, IEC 60947-4-1	200–240V	5.5	5.5	7.5	11	
	380–440V	11	11	15	18.5	
	500–550V	11	11	15	18.5	
	600–660V	7.5	7.5	11	15	
Operational current (A)	200–240V	22	22	32	40	
	380–440V	22	22	32	40	
	500–550V	17	17	24	29	
	600–660V	9	9	15	19	
Conventional free air thermal current (A)		32	32	50	60	
Auxiliary contact arrangement		1NC×2 1NO×2	(1NO+1NC)×2 2NC×2	(2NO+2NC)×2 (3NO+3NC)×2	(2NO+2NC)×2 (3NO+3NC)×2	
Standard	Contactor	**SC-4-1RMC**	**SC-5-1RMC**	**SC-N1RMC**	**SC-N2RMC**	*Page A1-34*
	Starter	**SW-4-1RMC/3H**	**SW-5-1RMC/3H**	**SW-N1RMC/3H**	**SW-N2RMC/3H**	
With phase-loss protective device	Contactor	–	–	–	–	*Page A1-56*
	Starter	**SW-4-1RMC/2E**	**SW-5-1RMC/2E**	**SW-N1RMC/2E**	**SW-N2RMC/2E**	
With ON-OFF pushbuttons	Contactor	–	–	–	–	–
	Starter	–	–	–	–	–
Thermal overload relay On-contactor mounting						*Page A1-87*
Standard		**TR-5-1N/3**	**TR-5-1N/3**	**TR-N2/3**	**TR-N2/3**	
Phase-loss protection		**TK-5-1N**	**TK-5-1N**	**TK-N2**	**TK-N2**	

Magnetic Contactors and Starters
SC and SW series Quick selection guide/Reversing, Enclosed type

■ Types and ratings/Reversing, Enclosed

Frame size		N2S	N3	N4	N5A	Further information
Max. motor capacity (kW) AC-3, IEC 60947-4-1	200–240V	15	18.5	22	30	
	380–440V	22	30	40	55	
	500–550V	25	37	37	55	
	600–660V	22	30	37	55	
Operational current (A)	200–240V	50	65	80	105	
	380–440V	50	65	80	105	
	500–550V	38	60	60	85	
	600–660V	26	38	44	64	
Conventional free air thermal current (A)		80	100	135	150	
Auxiliary contact arrangement		(2NO+2NC)×2 (3NO+3NC)×2	(2NO+2NC)×2 (3NO+3NC)×2	(2NO+2NC)×2 (3NO+3NC)×2	(2NO+2NC)×2 (3NO+3NC)×2	
Standard	Contactor	**SC-N2SRMC**	**SC-N3RMC**	**SC-N4RMC**	**SC-N5ARMC**	*Page A1-34*
	Starter	**SW-N2SRMC/3H**	**SW-N3RMC/3H**	**SW-N4RMC/3H**	**SW-N5ARMC/3H**	
With phase-loss protective device	Contactor	–	–	–	–	*Page A1-56*
	Starter	**SW-N2SRMC/2E**	**SW-N3RMC/2E**	**SW-N4RMC/2E**	**SW-N5ARMC/2E**	
With ON-OFF pushbuttons	Contactor	–	–	–	–	–
	Starter	–	–	–	–	–
Thermal overload relay On-contactor mounting						*Page A1-87*
Standard		**TR-N3/3**	**TR-N3/3**	**TR-N5/3**	**TR-N5/3**	
Phase-loss protection		**TK-N3**	**TK-N3**	**TK-N5**	**TK-N5**	

Frame size		N6	N7	N8	N10	Further information
Max. motor capacity (kW) AC-3, IEC 60947-4-1	200–240V	37	45	55	65	
	380–440V	60	75	90	110	
	500–550V	60	75	130	132	
	600–660V	60	90	132	132	
Operational current (A)	200–240V	125	150	180	220	
	380–440V	125	150	180	220	
	500–550V	90	120	180	200	
	600–660V	72	103	150	150	
Conventional free air thermal current (A)		150	200	260	260	
Auxiliary contact arrangement		(2NO+2NC)×2 (3NO+3NC)×2	(2NO+2NC)×2 (3NO+3NC)×2	(2NO+2NC)×2 (3NO+3NC)×2	(2NO+2NC)×2 (3NO+3NC)×2	
Standard	Contactor	**SC-N6RMC**	**SC-N7RMC**	**SC-N8RMC**	**SC-N10RMC**	*Page A1-34*
	Starter	**SW-N6RMC/3H**	**SW-N7RMC/3H**	**SW-N8RMC/3H**	**SW-N10RMC/3H**	
With phase-loss protective device	Contactor	–	–	–	–	*Page A1-56*
	Starter	**SW-N6RMC/2E**	**SW-N7RMC/2E**	**SW-N8RMC/2E**	**SW-N10RMC/2E**	
With ON-OFF pushbuttons	Contactor	–	–	–	–	–
	Starter	–	–	–	–	–
Thermal overload relay On-contactor mounting						*Page A1-87*
Standard		**TR-N6/3**	**TR-N7/3**	**TR-N8/3**	**TR-N10/3**	
Phase-loss protection		**TK-N6**	**TK-N7**	**TK-N8**	**TK-N10**	

Magnetic Contactors and Starters
SC and SW series Type number nomenclature

■ Types number nomenclature

SW N1 H RM C/ □ □

Basic type
SC: Magnetic contactor
SW: Magnetic motor starter *1

Frame size
03 to N16

Auxiliary contact
Blank: Bifurcated contact (03 to N12)
Single button contact (N14, N16)
H: Single button contact (03 to N12)

Non-reversing or reversing
Blank: Non-reversing
RM: Reversing *2

Enclosure
Blank: Open
C: Enclosed
P: Enclosed with ON-OFF/reset pushbuttons (03 to 5-1)
Enclosed with ON-OFF pushbuttons (N1 to N3)
PB: Enclosed with ON-OFF/reset pushbuttons (N1 to N10)
LG: Enclosed, dust-tight and light-corrosion resistant

Thermal overload relay
Blank: Standard type, 2-element
3H: Standard type, 3-element
2L: For heavy starting duty, 2-element
3L: For heavy starting duty, 3-element
3Q: Quick operating
2E: With phase-loss protective device

Operating method
Blank: AC operated (03 toN5A)
AC/DC operated (N5 to N16)
G: DC operated (03 to N3)
SE: AC/DC operated (N1 to N4)

U: With extra pick-up operating coil (03 to N4)
V: Mechanical latch, AC operated (03 to 5-1)
VG: Mechanical latch, DC operated (03 to 5-1)
VS: Mechanical latch, AC/DC operated (N1 to N14)

Notes:
*1 Magnetic contactors (SC-□) and thermal overload relays (TR-□) have actual type names on nameplates. Note that an open type magnetic motor starter (SW-□) consists of both items but it has no magnetic motor starter type name on it. It has names of contactor and thermal overload relay.

• Example
When a motor starter SW-0 is ordered;

Assembled at factory

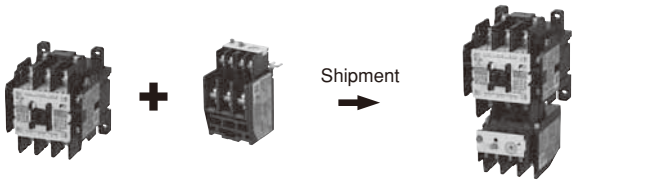

Nameplates on products

SC-N1
TR-N2/3

SW-N1/3H ordered

SC-N1 **TR-N2/3** **SW-N1/3H**

*2 Open type reversing magnetic contactors (SC-□RM) and motor starters (SW-□RM) have no type name on their nameplates describing them as reversing types.

• Example
When a reversing contactor SC-0RM is ordered;

Assembled at factory

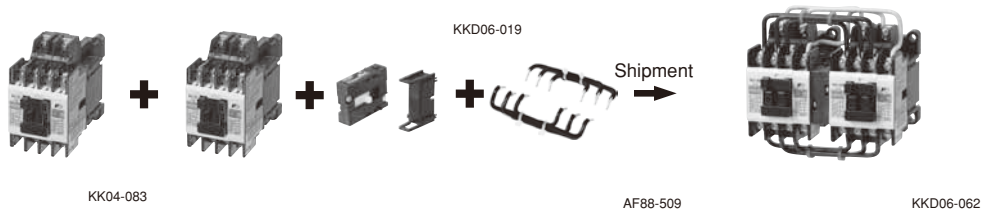

SC-0 **SC-0** **SZ-RM Interlock unit** **SZ-RW1 Power connection kit** **SC-0RM**

■ Ordering information

Specify the following:
1. Ordering code (see next page)
2. Overload relay setting range code
3. Operating coil voltage code
4. Auxiliary contact arrangement code

Magnetic Contactors and Starters
SC and SW series Ordering code system

■ Ordering code system

SC series magnetic contactors

SC	25	B	A	A – M	22
①②	③④	⑤	⑥	⑦ ⑨	⑩⑪

SW series magnetic motor starter

SC	25	B	A	A	N – M	22	TB	D
①②	③④	⑤	⑥	⑦	⑧ ⑨	⑩⑪	⑫	⑬

① Product category

Description	Code
Contactor and starter	S

② Series category

Description	Code
SC and SW series	C

③④ Frame size

Frame size	Code	
	③	④
03	1	1
0	1	3
05	1	4
4-0	1	8
4-1	1	9
5-1	2	0
N1	2	5
N2	3	5
N2S	5	0
N3	6	5
N4	8	0
N5	9	3
N6	1	C
N7	1	F
N8	1	J
N10	2	C
N11	3	A
N12	4	A
N14	6	A
N16*	8	A

*Contactor only

⑤ Index

Index	Code
03 to 5-1	Blank
N1 to N16	B
N5A	C

⑥ Version

Description	Code	
	Contactor	Starter
Non-reversing, open		
Standard	A	A
Non-reversing, enclosed		
Standard	C	C
Dust-tight/light-corrosion resistant	–	L
With on – off pushbutton	–	P
With on – off/reset pushbutton	–	J
Reversing, open		
Standard	R	R
Reversing, enclosed		
Standard	M	M
Dust-tight/light-corrosion resistant	–	G

⑦ Coil and contact specifications

Description		Code
Standard	AC operating coil	A (Up to N5A)
	DC operating coil	G (Up to N5)
	Both AC and DC operating coil	A (N5 and above)
	With extra pick-up operating coil	U (Up to N4)
With super magnet	Both AC and DC operating coil	S (N1 to N4)
Mechanical latch (Contactor only)	AC operating coil	V (Up to 5-1)
	DC operating coil	D (Up to 5-1)
	Both AC and DC operating coil	E (N1 and above)
With single-button auxiliary contact	AC operating coil	H (Up to N12)
	DC operating coil	Q (Up to N12)
	With extra pick-up operating coil	L (Up to N12)

⑧ Type of thermal overload relay

Description			Code
Standard	**TR-□**	2-element	N
	TR-□/3	3-element	N
Long time operating	**TR-□L**	2-element	L
	TR-□L3	3-element	F
Quick operating	**TR-□Q**	3-element	S
Open-phase protection	**TK-□**	3-element	E

⑨ Coil voltage

● Frame size 03 to N5A
AC coil

Operating coil voltage		Code
50Hz	60Hz	
24V	24-26V	E
48V	48-52V	F
100V	100-110V	1
100-110V	110-120V	H
110-120V	120-130V	K
200V	200-220V	2
200-220V	220-240V	M
220-240V	240-260V	P
346-380V	380-420V	S
380-400V	400-440V	4
415-440V	440-480V	T
480-500V	500-550V	5

● Frame size 03 to N5
DC coil

Operating coil voltage	Code
12V DC	B
24V DC	E
48V DC	F
60V DC	G
100V DC	1
110V DC	H
120V DC	K
200V DC	2
210V DC	Y
220V DC	M

● Frame size N1/SE to N4/SE, N5 to N16
AC and DC coil (common)

Operating coil voltage		Code
AC 50/60Hz	DC	
24-25V	24V	E
48-50V	48V	F
100-127V	100-120V	1
200-250V	200-240V	2
265-347V	–	3
380-450V	–	4
460-575V	–	5

⑩⑪ Auxiliary contact

● SC-03 to 5-1

Contact arrangement	Code	
	⑩	⑪
1NO	1	0
1NC	0	1
1NO+1NC	1	1
2NO	2	0
2NC	0	2
2NO+2NC	2	2

● SC-N1 to N16

Contact arrangement	Code	
	⑩	⑪
2NO+2NC	2	2
3NO+3NC	3	3
4NO+4NC	4	4

Fuji Electric FA Components & Systems Co., Ltd.
Information subject to change without notice

⑫ **Thermal overload relay ampere setting range**

Ampere setting range (A)	Code	Ampere setting range (A)	Code	Ampere setting range (A)	Code
0.1 - 0.15	TA	4 - 6	TS	65 - 95	TM
0.13 - 0.2	TB	5 - 8	TT	85 - 105	TI
0.15 - 0.24	TC	6 - 9	TU	85 - 125	TN
0.2 - 0.3	TD	7 - 11	TV	110 - 160	TP
0.24 - 0.36	TE	9 - 13	TW	125 - 185	TR
0.3 - 0.45	TF	12 - 18	TX	160 - 240	TS
0.36 - 0.54	TG	16 - 22	TQ	200 - 300	TT
0.48 - 0.72	TH	18 - 26	TB	240 - 360	TU
0.64 - 0.96	TJ	24 - 36	TE	300 - 450	TV
0.8 - 1.2	TK	28 - 40	TF	400 - 600	TW
0.95 - 1.45	TL	32 - 42	TI		
1.4 - 2.2	TM	34 - 50	TG		
1.7 - 2.6	TN	45 - 65	TJ		
2.2 - 3.4	TP	48 - 68	TO		
2.8 - 4.2	TR	53 - 80	TL		

⑬ **No. of heater element and reset method**

Description	Code
Manual reset 2-element 3-element	 Blank D
Auto reset 2-element 3-element	 A B

A1

Ordering example

● **Magnetic motor starter**

① Magnetic starter ..... S
② SW series C
③④ Frame size: 5-1 20
⑤ Index ..... Blank
⑥ Non-reversing, open: Standard ..... A
⑦ Operating coil: AC operating ..... A
⑧ Thermal overload relay: Standard ..... N
⑨ Operating coil voltage: 220V-240V AC, 50Hz ..... P
⑩⑪ Auxiliary contact: 1NO+1NC 11
⑫ Thermal overload relay heater range : 9-13 ..... TW
⑬ No. of heater element: 3 ..... D

Ordering code: SC20AAN-P11TWD

● **Magnetic contactor**

① Magnetic contactor ..... S
② SC series C
③④ Frame size: N6 ..... 1C
⑤ Index ..... B
⑥ Non-reversing, open: Standard ..... A
⑦ Operating coil: DC operating ..... A

⑨ Operating coil voltage: 110V DC 1
⑩⑪ Auxiliary contact: 2NO+2NC 22

Ordering code: SC1CBAA-122

■ Correct mounting

(1) Although the standard mounting shown in Fig. 1 is the correct mounting method, the product may also be mounted vertically or horizontally angled, as shown below.
(Fig. 2.) • SC(SW)-03 to N16 type: 30°

● Products cannot be mounted rotated 180° from standard mounting.

(2) The product may need to be horizontally mounted due to wiring or the mounting relationship with other equipment. This is acceptable for products other than the SC-N14 and N16 types, as long as the following points are kept in mind.

• Although there will be hardly any difference in magnetic contactor characteristics, the mechanical durability and operating cycles per hour will decrease.
• The operational limiting current of the thermal overload relay will vary slightly.

(3) Other types of mounting

• Standard type magnetic contactors/switches cannot be ceiling mounted. If ceiling mounted, they will not be able to satisfy standard operating characteristic values due to the effect of the weight of the moving parts.
• Standard type magnetic contactors/switches cannot be horizontally mounted. If horizontally mounted, they could malfunction due to external vibration/impact caused by the effect of the weight of the moving parts. Dedicated horizontal mounting products are available.

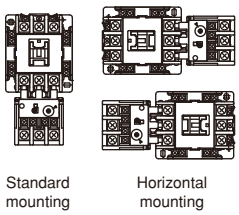

Fig. 1

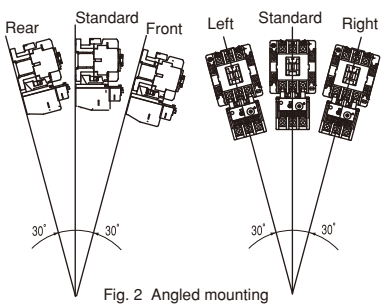

Fig. 2 Angled mounting

To order these, specify "Z109" at the end of the model name. However, "Z109" specification products cannot be used for standard mounting (vertical mounting).

① The mechanical durability, electrical durability, and operating cycles per hour are reduced to 80% of those of standard types.
② The operational limiting current of the thermal overload relay will vary slightly for magnetic switches.
③ The following types can be manufactured: SC-03 to SC-5-1 types, SW-03 to 5-1 types, SH-4 and 5 types, SC-N1 to N10 types, SW-N1 to N10 types, SC-N1/G to N3/G types, SC-N1/SE to N4/SE types, and SB- □ N types.
④ SC-03/G to SC-5-1/G types, SC-N11 to SC-N16 types, SB- □ NB types, and mechanical latch type horizontal mounting dedicated products cannot be manufactured.

Type	Mechanical durability (in 10,000s of times or more)		Operating cycles per hour (times/hour or more)	
	Standard mounting	Horizontal mounting	Standard mounting	Horizontal mounting
SC-03	1000	80% of standard mounting	1800	80% of standard mounting
SC-0	1000		1800	
SC-05	1000		1800	
SC-4-0	1000		1800	
SC-4-1	1000		1800	
SC-5-1	1000		1800	
SC-N1	1000		1200	
SC-N2	1000		1200	
SC-N2S	500		1200	
SC-N3	500		1200	
SC-N4	500		1200	
SC-N5	500		1200	
SC-N6	500		1200	
SC-N7	500		1200	
SC-N8	500		1200	
SC-N10	500		1200	
SC-N11	500		1200	
SC-N12	500		1200	
SC-N14	500	Not possible	1200	Not possible
SC-N16	250		1200	

Magnetic Contactors and Starters
SC and SW series Specifications

■ Ratings

Conforming to IEC 60947-4-1, EN 60947-4-1, VDE 0660

Contactor Type	Starter Type	Max. motor capacity (kW) 200V–240V	380V–440V	500V–550V	600V–660V	Rated operational current (A) 200V–240V	380V–440V	500V–550V	600V–660V	Thermal current (A) *1
SC-03	**SW-03/3H**	2.5	4	4	4	11	9	7	5	20
SC-0	**SW-0/3H**	3.5	5.5	5.5	5.5	13	12	9	7	20
SC-05	**SW-05/3H**	3.5	5.5	5.5	5.5	13	12	9	7	20
SC-4-0	**SW-4-0/3H**	4.5	7.5	7.5	7.5	18	16	13	9	25
SC-4-1	**SW-4-1/3H**	5.5	11	11	7.5	22	22	17	9	32
SC-5-1	**SW-5-1/3H**	5.5	11	11	7.5	22	22	17	9	32
SC-N1	**SW-N1/3H**	7.5	15	15	11	32	32	24	15	50
SC-N2	**SW-N2/3H**	11	18.5	18.5	15	40	40	29	19	60
SC-N2S	**SW-N2S/3H**	15	22	25	22	50	50	38	26	80
SC-N3	**SW-N3/3H**	18.5	30	37	30	65	65	60	38	100
SC-N4	**SW-N4/3H**	22	40	37	37	80	80	60	44	135
SC-N5A	**SW-N5A/3H**	30	55	55	55	105	105	85	64	150
SC-N6	**SW-N6/3H**	37	60	60	60	125	125	90	72	150
SC-N7	**SW-N7/3H**	45	75	75	90	150	150	120	103	200
SC-N8	**SW-N8/3H**	55	90	130	132	180	180	180	150	260
SC-N10	**SW-N10/3H**	65	110	132	132	220	220	200	150	260
SC-N11	**SW-N11/3H**	90	160	160	200	300	300	230	230	350
SC-N12	**SW-N12/3H**	120	220	250	300	400	400	360	360	450
SC-N14	**SW-N14/3H**	180	315	400	480	600	600	600	600	660
SC-N16	–	220	440	500	500	800	800	720	630	800

Note: *1 The values are applied to contactors.

■ Making and breaking capacities

Utilization category	Typical applications		IEC 60947-4-1, EN 60947-4-1, VDE 0660, JIS C 8201-4-1 Making and breaking Ic/Ie	Ur/Ue	cosø or L/R	Making I/Ie	U/Ue	cosø or L/R
AC-1	Non-inductive or slightly inductive loads, resistance furnaces		1.5	1.05	0.8	1.5	1.05	0.8
AC-2	Slip-ring motors: Starting, switching off		4.0	1.05	0.65	4.0	1.05	0.65
AC-3	Squirrel-cage motors: Starting, switching off duling running	Ie ≤ 100A	8.0	1.05	0.45	10	1.05	0.45
		Ie > 100A	8.0	1.05	0.35	10	1.05	0.35
AC-4	Squirrel-cage motors: Starting, plugging, inching	Ie ≤ 100A	10	1.05	0.45	12	1.05	0.45
		Ie > 100A	10	1.05	0.35	12	1.05	0.35
AC-5a	Switching of electric discharge lamp controls		3.0	1.05	0.45	3.0	1.05	0.45
AC-5b	Switching of incandescent lamps		1.5	1.05	*	1.5	1.05	*

Note: *Test to be carried out with an incandescent lamp load.
Ie: Rated operational current Ue: Rated operational voltage I: Current made
U: Voltage before make Ur: Recovery voltage Ic: Current broken

■ Auxiliary contact ratings

Conforming to IEC 60947-5-1, EN 60947-5-1, VDE 0660

Type	Continuous currnet (A)	Make and break capacity at AC (A)	Rated operational current (A) AC Voltage (V)	AC-15 (Ind.load)	AC-12 (Res.load)	DC Voltage (V)	DC-13 (Ind.load)	DC-12 (Res.load)	Minimum voltage and current
SC-03 to SC-N12	10	60	100–120	6	10	24	3	5	5V 3mA
		30	200–240	3	8	48	1.5	3	
		15	380–440	1.5	5	110	0.55	2.5	
		12	500–600	1.2	5	220	0.27	1	
SC-N14 to SC-16N	10	60	100–120	6	10	24	5	10	24V 10mA
		60	200–240	6	10	48	1.5	5	
		40	380–440	4	10	110	0.55	2.5	
		25	500–600	2.5	10	220	0.27	1	

Fuji Electric FA Components & Systems Co., Ltd. Information subject to change without notice

■ Inching and plugging operations (Conforming to IEC 60947-4-1)

In applications where inching and plugging operations are included the contact wear will be increased. Therefore, it is necessary to select ones having larger frame sizes than in standard applications so as to minimize the needs of maintenance and replacement.

Voltage	Motor ratings Capacity (kW)	Full load current (A)	50% inching operation Electrical durability 100,000 operations	500,000 operations
200V	0.2	1.8	SC-03	SC-03
|	0.4	3.2	SC-03	SC-03
240V	0.75	4.8	SC-03	SC-0, 05
	1.5	8.0	SC-03	SC-4-1, 5-1
	2.2	11.1	SC-4-0	SC-N1
	3.7	17.4	SC-4-1, 5-1	SC-N2
	5.5	26	SC-N1	SC-N3
	7.5	34	SC-N2	SC-N5A
	11	48	SC-N2S	SC-N7
	15	65	SC-N4	SC-N8
	18.5	79	SC-N5A	SC-N10
	22	93	SC-N6	SC-N11
	30	124	SC-N7	SC-N14
	37	152	SC-N8	SC-N14
	45	180	SC-N10	–
	55	220	SC-N11	–
	75	300	SC-N14	–
380V	0.75	2.4	SC-03	SC-03
|	1.5	4.0	SC-03	SC-03
440V	2.2	5.6	SC-03	SC-4-0
	3.7	8.7	SC-03	SC-4-1, 5-1
	5.5	13	SC-4-0	SC-N1
	7.5	17	SC-4-1, 5-1	SC-N2S
	11	24	SC-N1	SC-N3
	15	32.5	SC-N2	SC-N5A
	18.5	39.5	SC-N2S	SC-N6
	22	46.5	SC-N3	SC-N7
	30	62	SC-N4	SC-N8
	37	76	SC-N5A	SC-N10
	45	90	SC-N6	SC-N11
	55	110	SC-N8	SC-N12
	75	150	SC-N10	SC-N14
	90	180	SC-N11	–
	110	220	SC-N12	–
	132	264	SC-N14	–
	150	300	SC-N14	–
	160	320	SC-N14	–

Notes: 1. Inching % = $\frac{\text{No. of inching operations}}{\text{Total No. of switching operations}} \times 100\%$

2. Light inching: 50%
Printing machine and similar equipment
Heavy inching: 75 – 100%
Machine tool, hoist and similar equipment (In cases when there are frequent on/off operations involving starting rush current).

■ Standard conditions for operation in service

- Temperature range:
  Operating: –5°C to+40°C
  (–5°C to + 55°C inside panel box)
  Storage: –40°C to + 65°C
- Humidity: 45 to 85% RH
- Vibration: 10 to 55Hz, 15m/s²
- Shock: 50m/s²
- Altitude: 2000m (6600ft) or lower
- IP40

■ Breaking current and electrical durability

SC-03 to 5-1

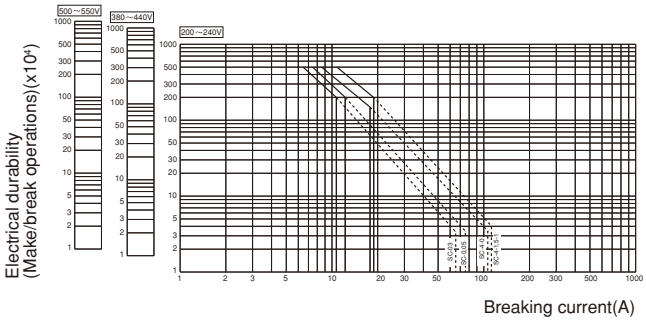

SC-N1 to N3

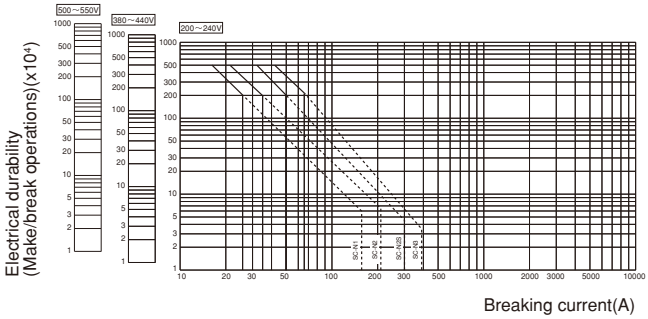

SC-N4 to N16

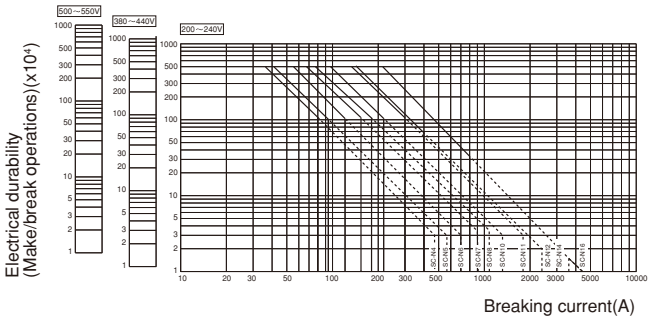

■ Testing method—Category AC-3

The method of determining the life expectancy and performance is prescribed by IEC as below.

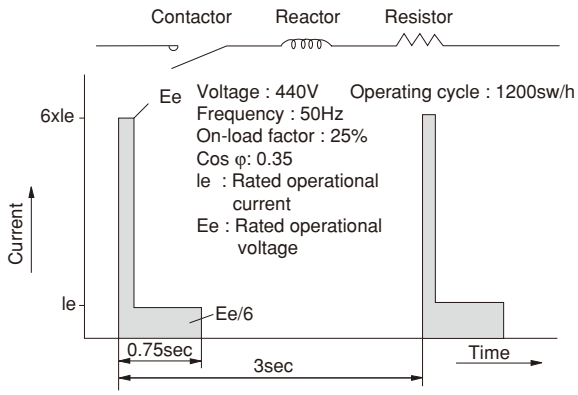

A current equal to six times that of the rated operational current of the starter is applied to the terminals the switch is closed and the current immediately reduced to the rated operational current and then interrupted.

Magnetic Contactors and Starters
SC and SW series Specifications

■ Performance data

Frame size	Making capacity I/Ie	Breaking capacity I/Ie	Operating cycles per hour	Voltage	Durability (operations) Electrical *	Mechanical
03, 0, 05	12	10	1,800	200/240V AC 380/440V AC	2 million	10 million
4-0	12	10	1,800	200/240V AC 380/440V AC	1.5 million	10 million
4-1, 5-1	12	10	1,800	200/240V AC 380/440V AC	2 million	10 million
N1 to N3	12	10	1,200	200/240V AC 380/440V AC	2 million	10 million (N1, N2) 5 million (N2S, N3)
N4 to N11	12	10	1,200	200/240V AC 380/440V AC	1 million	5 million
N12, N14	12	10	1,200	200/240V AC 380/440V AC	500,000	5 million
N16	12	10	1,200	200/240V AC 380/440V AC	250,000	2.5 million

Ie: Rated operational currnet. I: Making or breaking current * For delails, refer to page A1-21

■ Coil voltage

● Frame size 03 to N5A

Frame size	Coil operating voltage and frequency (AC)			Order voltage	Coil voltage code	Identificaiton by coil color	Wiring
03	24V	50Hz/24–26V	60Hz	AC24V	**E**	White	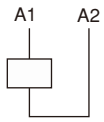
0	48V	50Hz/48–52V	60Hz	AC48V	**F**	White	
05	100V	50Hz/100–110V	60Hz	AC100V	**1**	Green (Standard voltage)	
4-0	100–110V	50Hz/110–120V	60Hz	AC110V	**H**	White	
4-1	110–120V	50Hz/120–130V	60Hz	AC120V	**K**	White	
5-1	200V	50Hz/200–220V	60Hz	AC200V	**2**	Yellow (Standard voltage)	
N1	200–220V	50Hz/220–240V	60Hz	AC220V	**M**	White	
N2	220–240V	50Hz/240–260V	60Hz	AC240V	**P**	White	
N2S	346–380V	50Hz/380–420V	60Hz	AC380V	**S**	White	
N3	380–400V	50Hz/400–440V	60Hz	AC400V	**4**	Purple (Standard voltage)	
N4	415–440V	50Hz/440–480V	60Hz	AC440V	**T**	White	
N5A	480–500V	50Hz/500–550V	60Hz	AC500V	**5**	White	

Notes:
- Other voltages are available in 24 to 600V ranges on request.
- For frame size N1/SE to N4/SE, 24V to 250V AC (24V to 240V DC) is available.
- Use the coil voltage code, not specifying your actual voltage when ordering. Contactors with coil voltage range which corresponds to the voltage code you specified will be shipped from factory.
  The above coil operating voltage and frequency (not voltage code) are shown on the products.

● Frame size N5 to N16

Frame size	Coil operating voltage and frequency AC		DC	Order voltage	Coil voltage code	Identificaiton by coil color	Wiring
N5	24–25V	50/60Hz	24V	AC24V *3	**E**	White	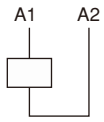
N6	48–50V	50/60Hz	48V	AC48V *3	**F**	White	
N7	100–127V	50/60Hz	100–120V *1	AC100V	**1**	Green (Standard voltage)	
N8							
N10	200–250V	50/60Hz	200–240V *2	AC200V	**2**	Yellow (Standard voltage)	
N11	265–347V	50/60Hz	–	AC300V	**3**	White	
N12	380–450V	50/60Hz	–	AC400V	**4**	Purple (Standard voltage)	
N14	460–575V	50/60Hz	–	AC500V	**5**	White	
N16							

Notes:
- The coils are AC/DC common use (rated voltage 200V or less)
- Standard rated voltages are 100V, 200V and 400V.
  Other voltages are available in 24V to 575V AC (24V to 240V DC) in frame size N5 to N12, also available in 100V to 575V AC (100V to 240V DC) in frame size N14 to N16.
- Use the coil voltage code, not specifying your actual voltage when ordering. Contactors with coil voltage range which corresponds to the voltage code you specified will be shipped from factory.
  The above coil operating voltage and frequency (not voltage code) are shown on the products.

*1 The coil voltage from a DC power supply with single phase full-wave rectification will be 100 to 110 V.
*2 The coil voltage from a DC power supply with single phase full-wave rectification will be 200 to 220 V.
*3 The coil voltage 24V and 48V are not available in frame size N14 to N16.

■ Coil characteristics

● Frame size 03 to N5A

Frame size	Power consumption Inrush (VA)	Power consumption Sealed (VA)	Watt loss (W) 200V 50Hz	Watt loss (W) 220V 60Hz	Pick-up voltage (V) 200V 50Hz	Pick-up voltage (V) 220V 60Hz	Drop-out voltage (V) 200V 50Hz	Drop-out voltage (V) 220V 60Hz	Operating time (ms) Coil ON→ Contact ON	Operating time (ms) Coil OFF→ Contact OFF
03	95	9	2.7	2.8	105–125	116–136	70–98	80–110	9–20	5–16
0	95	9	2.7	2.8	105–125	116–136	70–98	80–110	9–20	5–16
05	95	9	2.7	2.8	105–125	116–136	70–98	80–110	9–20	5–16
4–0	95	9	2.7	2.8	118–136	130–146	75–106	88–120	9–20	5–16
4–1	95	9	2.7	2.8	118–136	130–146	75–106	88–120	9–20	5–16
5–1	95	9	2.7	2.8	118–136	130–146	75–106	88–120	9–20	5–16
N1	135	12.7	3.6	3.8	110–130	120–140	75–105	85–115	10–17	6–17
N2	135	12.7	3.6	3.8	110–130	120–140	75–105	85–115	10–17	6–17
N2S	190	13.4	4.5	5	115–135	130–150	85–110	100–125	10–18	8–18
N3	190	13.4	4.5	5	115–135	130–150	85–110	100–125	10–18	8–18
N4	210	14.4	4.8	5.3	120–140	135–155	70–95	95–120	16–23	7–17
N5A	260	18.1	6.2	6.7	115–145	135–150	80–90	90–110	13–21	6–12

Note: Coil ratings 200V 50Hz, 200 to 220V 60Hz. Operating time is based on 200V 50Hz.

● Frame size N5 to N16, N1/SE to N4/SE (contactor only)

AC operating

Frame size	Power consumption Inrush (VA)	Power consumption Sealed (VA)	Watt loss (W) 200V 50Hz	Watt loss (W) 220V 60Hz	Pick-up voltage (V) 200V 50/60Hz	Drop-out voltage (V) 200V 50/60Hz	Operating time (ms) Coil ON→ Contact ON	Operating time (ms) Coil OFF→ Contact OFF
N5	95	4.6	3.2	3.6	140–150	60–100	39–45	27–33
N6	230	5.8	3.4	3.7	140–150	60–100	31–37	30–36
N7	230	5.8	3.4	3.7	140–150	60–100	31–37	30–36
N8	255	6.2	4.7	5.2	140–150	60–100	38–44	31–37
N10	255	6.2	4.7	5.2	140–150	60–100	38–44	31–37
N11	320	6.5	5.6	6	140–150	60–100	43–49	41–47
N12	320	6.5	5.6	6	140–150	60–100	43–49	41–47
N14	460	11	7.8	8.6	140–160	60–100	69–75	56–62
N16	460	11	7.8	8.6	140–160	60–100	69–75	56–62
N1/SE	130	4.2	2.8	3.2	140–150	60–100	21–27	18–24
N2/SE	130	4.2	2.8	3.2	140–150	60–100	21–27	18–24
N2S/SE	160	4.3	2.9	3.3	140–150	60–100	24–30	24–32
N3/SE	160	4.3	2.9	3.3	140–150	60–100	24–30	24–32
N4/SE	95	4.6	3.2	3.6	140–150	60–100	39–45	27–33

Note: Coil ratings 200 to 250V 50/60Hz, 200 to 220V DC. Operating time is based on 200V 50/60Hz.

DC operating

Frame size	Power consumption Inrush (W)	Power consumption Sealed (W)	Time constant (ms) Sealed	Pick-up voltage (V) 200V DC	Drop-out voltage (V) 200V DC	Operating time (ms) Coil ON→ Contact ON	Operating time (ms) Coil OFF→ Contact OFF
N5	110	3	1	140–160	40–100	35–41	26–32
N6	275	4	1	140–160	40–100	28–34	27–33
N7	275	4	1	140–160	40–100	28–34	27–33
N8	300	4.5	1	140–160	40–100	33–39	31–37
N10	300	4.5	1	140–160	40–100	33–39	31–37
N11	410	4.6	1	140–160	40–100	38–44	41–47
N12	410	4.6	1	140–160	40–100	38–44	41–47
N14	500	8.8	1	140–160	40–100	64–70	52–57
N16	500	8.8	1	140–160	40–100	64–70	52–57

Note: Coil ratings 200 to 250V 50/60Hz, 200 to 220V DC. Operating time is based on 200V DC.

Magnetic Contactors and Starters
SC and SW series Specifications

DC applications of magnetic contactors

■ Description

FUJI magnetic contactors in the SC series are normally used in AC circuit applications. However, they may also be used in DC circuits, and in this case their contacts must be connected in series as shown in the diagram. When used in this manner they will be found to be more economical than using contactors exclusively designed for DC applications. Coils are available for both AC and DC.
If the following ratings are observed the equipment will have an electrical durability of approx. 500,000 operations.

■ Wiring connection

Contacts must be connected in series when the contactors are used in DC applications.

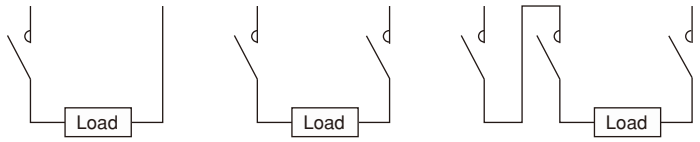

Series contact 1 Series contact 2 Series contact 3

■ Ratings

Type	No. of contacts connected in series	Rated operational current (A)							
		Class DC-1(JEM1038) (Resistive, L/R ≤ 1ms.)				Class DC2, 4,(JEM1038) (DC motor, L/R ≤ 15ms.)			
		24V	48V	110V	220V	24V	48V	110V	220V
SC-03	1	13	13	10	1.2	6	3	2	0.35
	2	13	13	10	6	12	6	4	1.2
	3	15	15	15	15	15	10	8	4
SC-0	1	13	13	10	1.2	6	3	2	0.35
	2	13	13	10	6	12	6	4	1.2
	3	15	15	15	15	15	10	8	4
SC-05	1	13	13	10	1.2	6	3	2	0.35
	2	13	13	10	6	12	6	4	1.2
	3	15	15	15	15	15	10	8	4
SC-4-0	1	16	13	10	1.5	8	6	2	0.35
	2	16	16	12	8	16	12	6	1.5
	3	18	18	18	15	18	18	12	6
SC-4-1	1	20	15	12	2	10	8	3	0.35
	2	20	20	15	10	20	15	8	2
	3	22	22	20	15	22	22	15	8
SC-5-1	1	20	15	12	2	10	8	3	0.35
	2	20	20	15	10	20	15	8	2
	3	22	22	20	15	22	22	15	8
SC-N1	1	25	25	15	2	15	8	3	0.35
	2	25	25	25	20	25	15	8	2
	3	35	35	30	25	35	25	20	8
SC-N2	1	30	30	20	2	20	15	4	0.35
	2	30	30	30	20	30	20	15	3
	3	45	45	40	35	35	30	30	8
SC-N2S	2	60	60	40	20	60	30	20	3.5
	3	60	60	60	40	60	60	60	13
SC-N3	2	80	80	50	20	80	40	20	4
	3	80	80	80	60	80	80	80	20
SC-N4	2	80	80	50	20	80	40	20	4
	3	80	80	80	60	80	80	80	20
SC-N5A	2	120	120	80	40	120	80	40	15
	3	120	120	120	120	120	120	120	80
SC-N6	2	120	120	80	40	120	80	40	15
	3	120	120	120	120	120	120	120	80
SC-N7	2	160	160	100	80	160	120	80	40
	3	160	160	160	160	160	160	160	160
SC-N8	2	200	200	160	160	200	160	120	60
	3	200	200	200	200	200	200	200	200
SC-N10	2	200	200	160	160	200	160	120	60
	3	200	200	200	200	200	200	200	200
SC-N11	2	300	300	200	200	300	200	160	80
	3	300	300	300	300	300	300	300	300
SC-N12	2	400	400	330	300	400	300	200	100
	3	400	400	400	400	400	400	400	400
SC-N14	2	600	500	420	300	–	–	–	–
	3	600	600	600	420	–	–	–	–

Magnetic Contactors and Starters
SC and SW series Standard type

Standard type non-reversing contactors and starters

Up to 315kW 440 Volts 3-phase
(440kW for contactor only)

■ Description

The starter consists of a magnetic contactor and a thermal overload relay and is designed for the full voltage starting of 3-phase induction motor.

■ Standards

- Meet the requirements of BS, NEMA, IEC, VDE and JIS.
  The SC series contactors have already been approved by NK, LR, BV for marine use, UL, CSA and TÜV. These contactors can be used universally because of their high efficiency and reliability and are completely safe. Their maximum rated voltage is 660V AC.

■ Features

SC-03 to SC-5-1

- Small frame contactors have such options as additional auxiliary blocks, operation counter unit with snap-on fittings, and coil surge suppressors. Modification can be made quickly and easily on site.
- Bifurcated type auxiliary contacts have a high degree of contact reliability. They can be used in low level circuit of 5V, 3mA.
- Type and rating are indicated on the front of contactor.

Contactors with single button auxiliary contacts (SC-03H to N12H)

See page A1-64

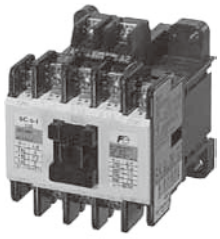

KK04-086

SC-5-1

KKD08-131

SW-N5A/3H

SC-N1 to SC-N16

- Adoption of improved contact material and arc-extinguishing grid permits further improvement in breaking efficiency.
- Type and rating are indicated on the front of contactor.
- Auxiliary contact arrangements are available up to 4NO+4NC.
- Can be mounted on 35mm rails to meet the requirements of IEC Standards. (SC-N1 to N3)
- Bifurcated type auxiliary contacts have a high degree of contact reliability. They can be used in low level circuit of 5V, 3mA.(SC-N1 to N12)

SUPER MAGNET (SC-N6 to SC-N16)

- The electronically-controlled SUPER MAGNET has an IC built into the coil circuit. Its operation is based on the “AC input, DC operated” concept.
- Operate on both AC and DC power supply. The operating voltage range has been greatly expanded.
- Coil burning and contact chattering due to voltage fluctuation have been eliminated.
- A built-in surge suppression device prevents surges from occurring on ON-OFF operations.

■ Thermal overload relays

- Superior protection
  The starter is fitted with a TR type thermal overload relay which features ambient temperature compensation, auto-manual resetting, and trip indicator.
- Alarm contacts are available in 1NO+1NC arrangements.
- Optional operation indicating lamp can be fitted on request.

■ Thermal overload relays :

See page A1-87.

■ Auxiliary contact ratings :

See page A1-20.

■ Performance data :

See page A1-22.

■ Coil ratings : *See page A1-22.*

■ Types and ratings

Max. motor capacity (kW)		Rated operation current (A)		Rated thermal current (A)	Auxiliary contact		Contactor		Starter (3-element)			
200V 240V	380V 440V	200V 240V	380V 440V		NO	NC	Open Type	Ordering code	Open Type	Ordering code	Enclosed Type	Ordering code
2.5	4	11	9	20	1	–*1	**SC-03**	SC11AA-■10	**SW-03/3H**	SC11AAN-■10T□D	**SW-03C/3H**	SC11CAN-■10T□D
3.5	5.5	13	12	20	1	–*1	**SC-0**	SC13AA-■10	**SW-0/3H**	SC13AAN-■10T□D	**SW-0C/3H**	SC13CAN-■10T□D
3.5	5.5	13	12	20	1	1*2	**SC-05**	SC14AA-■11	**SW-05/3H**	SC14AAN-■11T□D	**SW-05C/3H**	SC14CAN-■11T□D
4.5	7.5	18	16	25	1	–*1	**SC-4-0**	SC18AA-■10	**SW-4-0/3H**	SC18AAN-■10T□D	**SW-4-0C/3H**	SC18CAN-■10T□D
5.5	11	22	22	32	1	–*1	**SC-4-1**	SC19AA-■10	**SW-4-1/3H**	SC19AAN-■10T□D	**SW-4-1C/3H**	SC19CAN-■10T□D
5.5	11	22	22	32	1	1*3	**SC-5-1**	SC20AA-■11	**SW-5-1/3H**	SC20AAN-■11T□D	**SW-5-1C/3H**	SC20CAN-■11T□D
7.5	15	32	32	50	2	2	**SC-N1**	SC25BAA-■22	**SW-N1/3H**	SC25BAAN-■22T□D	**SW-N1C/3H**	SC25BCAN-■22T□D
11	18.5	40	40	60	2	2	**SC-N2**	SC35BAA-■22	**SW-N2/3H**	SC35BAAN-■22T□D	**SW-N2C/3H**	SC35BCAN-■22T□D
15	22	50	50	80	2	2	**SC-N2S**	SC50BAA-■22	**SW-N2S/3H**	SC50BAAN-■22T□D	**SW-N2SC/3H**	SC50BCAN-■22T□D
18.5	30	65	65	100	2	2	**SC-N3**	SC65BAA-■22	**SW-N3/3H**	SC65BAAN-■22T□D	**SW-N3C/3H**	SC65BCAN-■22T□D
22	40	80	80	135	2	2	**SC-N4**	SC80BAA-■22	**SW-N4/3H**	SC80BAAN-■22T□D	**SW-N4C/3H**	SC80BCAN-■22T□D
30	55	105	105	150	2	2	**SC-N5A**	SC93CAA-■22	**SW-N5A/3H**	SC93CAAN-■22T□D	**SW-N5AC/3H**	SC93CCAN-■22T□D
37	60	125	125	150	2	2	**SC-N6**	SC1CBAA-■22	**SW-N6/3H**	SC1CBAAN-■22T□D	**SW-N6C/3H**	SC1CBCAN-■22T□D
45	75	150	150	200	2	2	**SC-N7**	SC1FBAA-■22	**SW-N7/3H**	SC1FBAAN-■22T□D	**SW-N7C/3H**	SC1FBCAN-■22T□D
55	90	180	180	260	2	2	**SC-N8**	SC1JBAA-■22	**SW-N8/3H**	SC1JBAAN-■22T□D	**SW-N8C/3H**	SC1JBCAN-■22T□D
65	110	220	220	260	2	2	**SC-N10**	SC2CBAA-■22	**SW-N10/3H**	SC2CBAAN-■22T□D	**SW-N10C/3H**	SC2CBCAN-■22T□D
90	160	300	300	350	2	2	**SC-N11**	SC3ABAA-■22	**SW-N11/3H**	SC3ABAAN-■22T□D	**SW-N11C/3H**	SC3ABCAN-■22T□D
120	220	400	400	450	2	2	**SC-N12**	SC4ABAA-■22	**SW-N12/3H**	SC4ABAAN-■22T□D	**SW-N12C/3H**	SC4ABCAN-■22T□D
180	315	600	600	660	2	2	**SC-N14**	SC6ABAA-■22	**SW-N14/3H**	SC6ABAAN-■22T□D		
220	440	800	800	800	2	2	**SC-N16**	SC8ABAA-■22				

Notes : 1. ■ : Coil voltage code, □ : Thermal overload relay ampere setting range code, see page A1-19.
2. *1 Auxiliary contact 1NC is available. *2 Auxiliary contact 2NC or 2NC is available.
*3 Auxiliary contact 2NO, 2NC, or 2NO+2NC is available. For enclosed type, 2NO+2NC is not available.
3. Auxiliary contact 4NO+4NC is available on request for frame size N1 and above.
4. Contactor with enclosure is also available.

Magnetic Contactors and Starters
SC and SW series Standard type

■ Dimensions, mm
Contactors/Open type

SC-03, SC-0

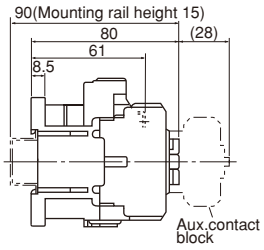

Mass: 0.32kg

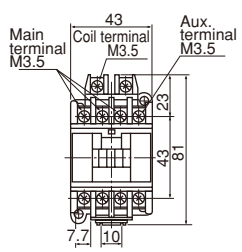

Panel drilling

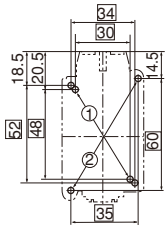

SC-05

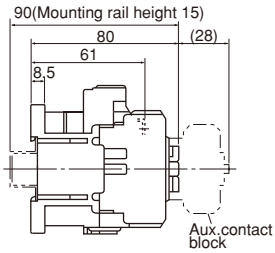

Mass: 0.34kg

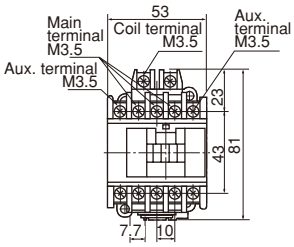

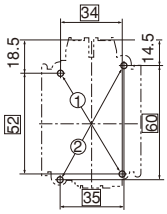

SC-4-0, SC-4-1

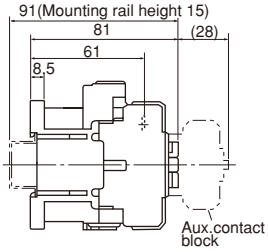

Mass: 0.36kg

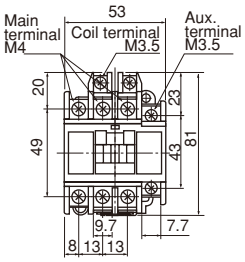

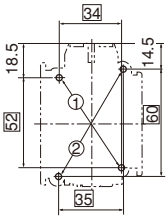

SC-5-1

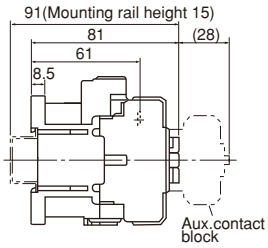

Mass: 0.38kg

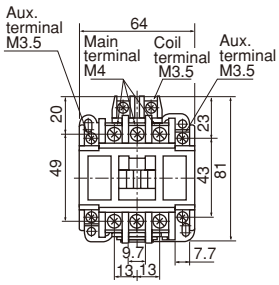

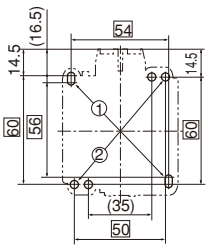

SC-5-1

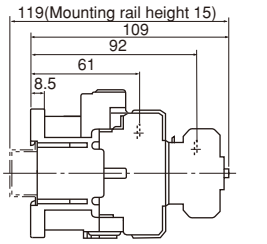

Mass: 0.4kg

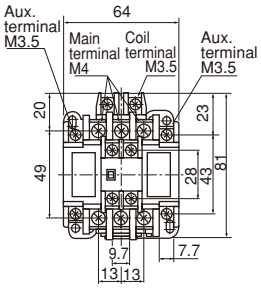

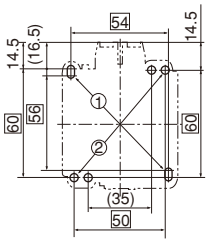

■ Wiring diagrams

Auxiliary contact

1NO

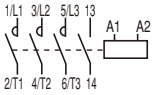

1NC

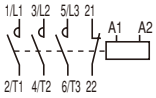

2NO

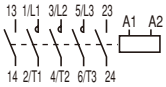

1NO+1NC

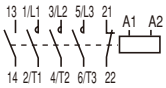

2NC

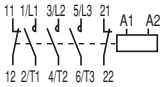

1NO

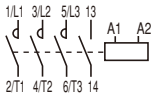

1NC

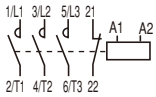

2NO

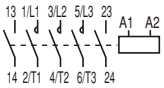

1NO+1NC

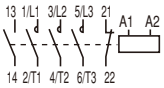

2NC

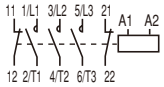

2NO+2NC

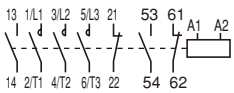

Note: Use the two mounting holes on a diagonal line to mount a contactor.
Mounting holes indicated by ① are compatible with those of SRC type.
Mounting holes indicated by ② are compatible with IEC standard

Fuji Electric FA Components & Systems Co., Ltd.
Information subject to change without notice

■ Dimensions, mm
Contactors/Open type

SC-N1, SC-N2

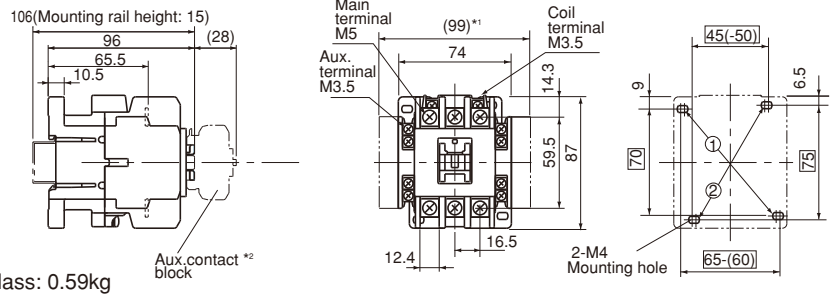

Mass: 0.59kg

SC-N2S, SC-N3

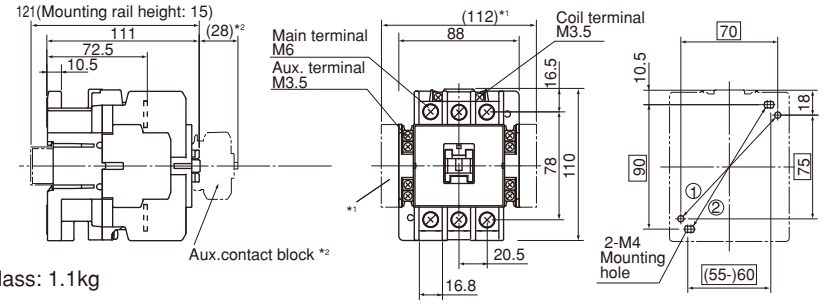

Mass: 1.1kg

SC-N4

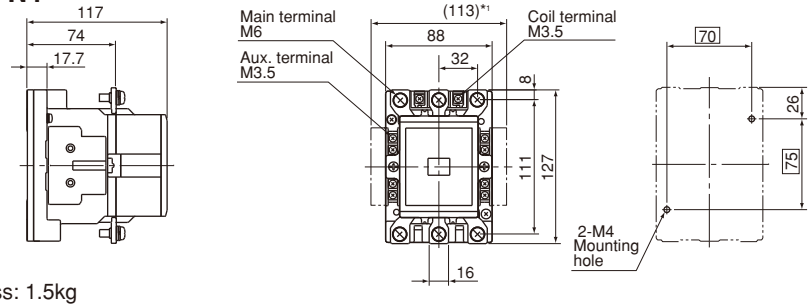

Mass: 1.5kg

SC-N5A

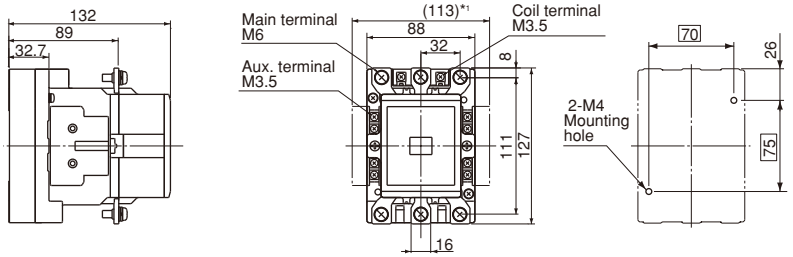

Mass: 1.5kg

SC-N6

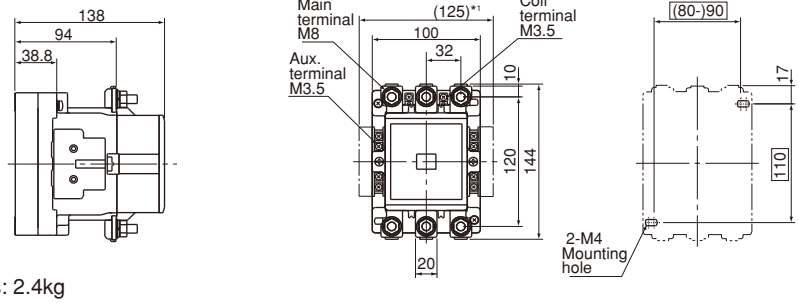

Mass: 2.4kg

■ Wiring diagrams
SC-N1 to SC-N16

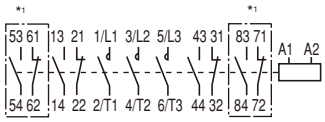

*1 In case of auxiliary contact 4NO+4NC

Note: • Use the two mounting holes on a diagonal line to mount a contactor.
Mounting holes indicated by ① are compatible with those of SRC type.
Mounting holes indicated by ② are compatible with IEC standard
*1 For two side mounting aux. contact blocks mounted
*2 For front mounting aux. contact blocks mounted

Magnetic Contactors and Starters
SC and SW series Standard type

■ Dimensions, mm
Contactors/Open type

SC-N7

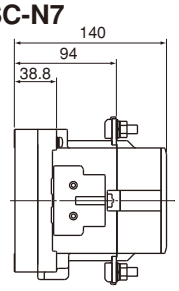

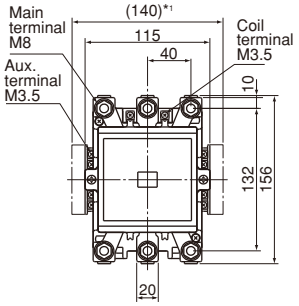

Panel drilling

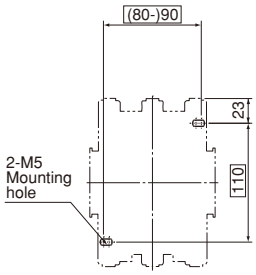

Mass: 2.7kg

SC-N8, SC-N10

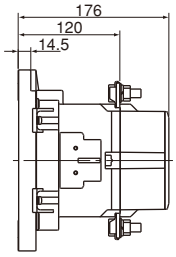

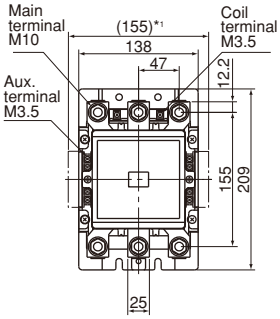

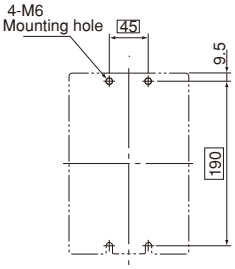

Mass: 4.9kg

SC-N11, SC-N12

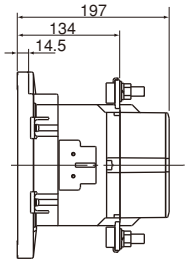

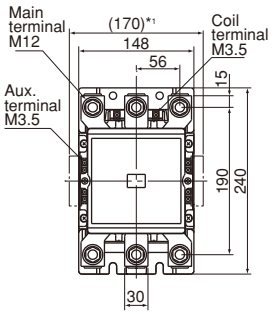

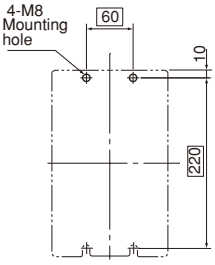

Mass: 7.8kg

SC-N14

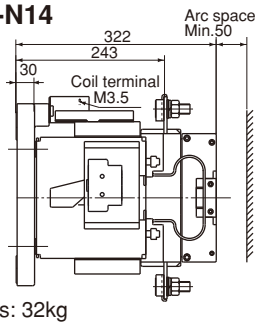

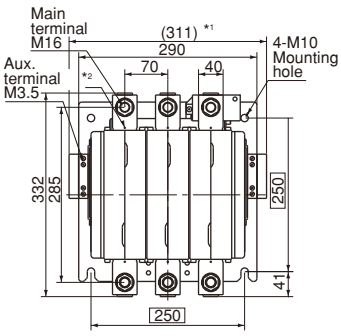

Mass: 32kg

SC-N16

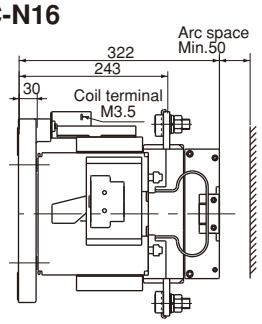

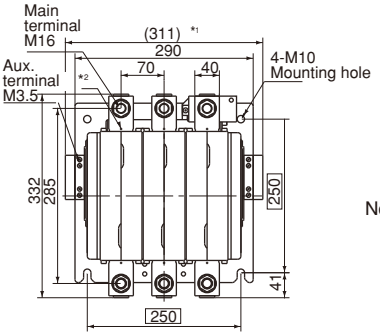

Mass: 34kg

Note: *1 For two side mounting aux.contact blocks mounted
*2 M4 tap for control circuit

■ Dimensions, mm
Starters/Open type

SW-03/3H, SW-0/3H

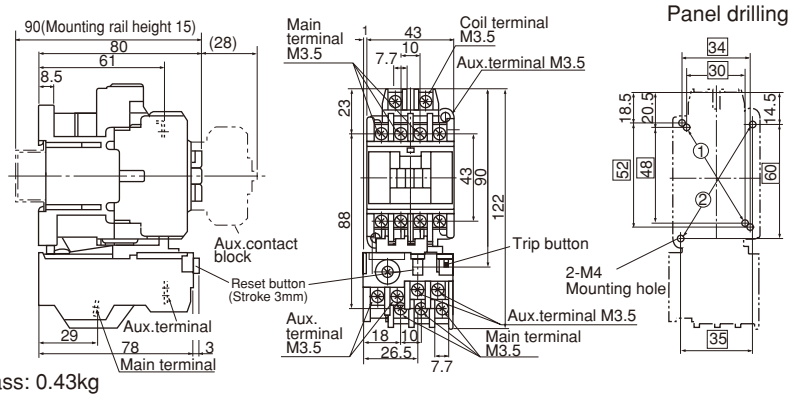

Mass: 0.43kg

SW-05/3H

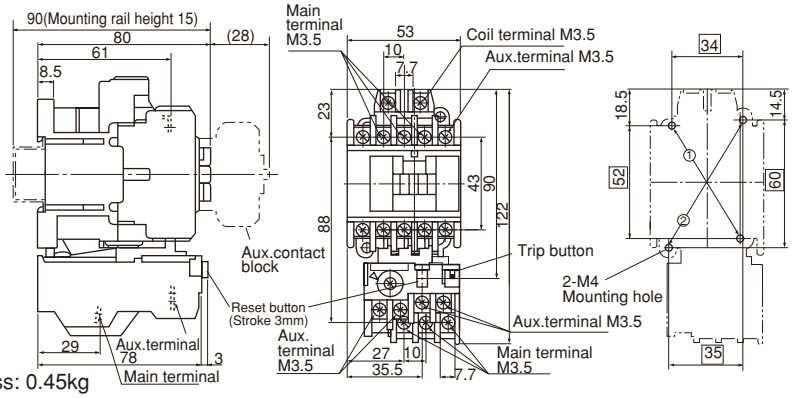

Mass: 0.45kg

SW-4-0/3H, SW-4-1/3H

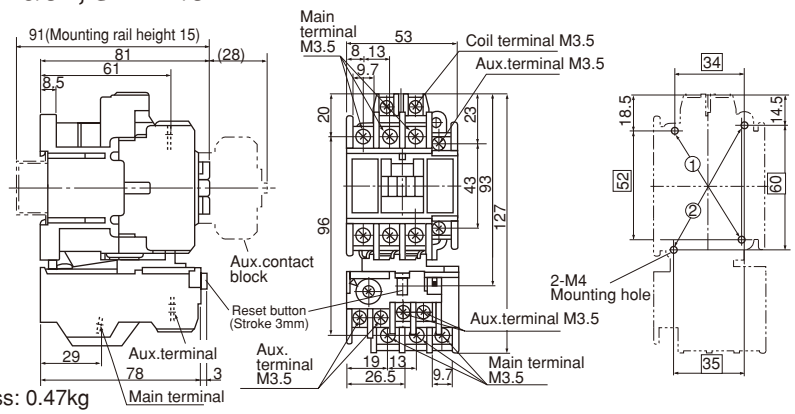

Mass: 0.47kg

SW-5-1/3H

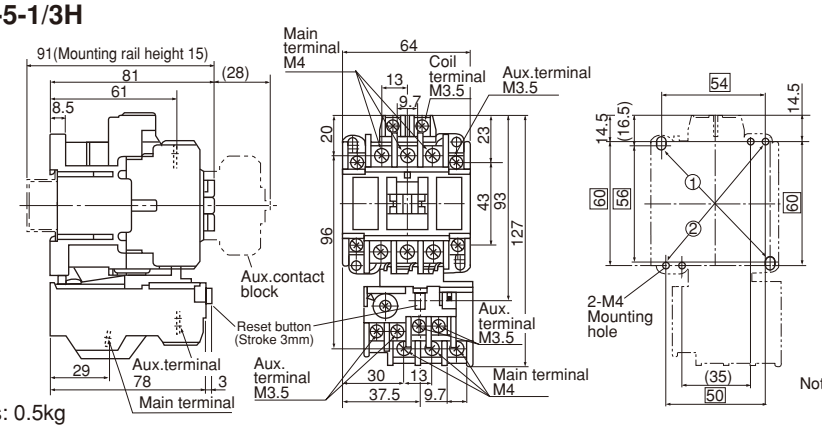

Mass: 0.5kg

■ Wiring diagrams

Auxiliary contact

1NO

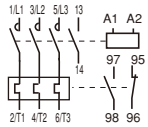

1NC

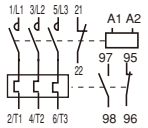

2NO

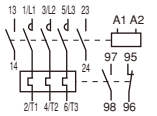

1NO+1NC

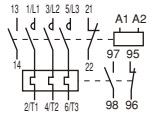

2NC

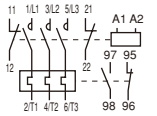

1NO

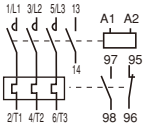

1NC

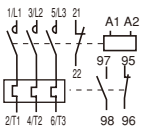

2NO

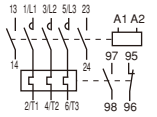

1NO+1NC

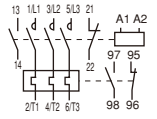

2NC

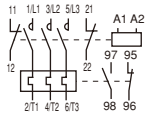

Note: Use the two mounting holes on a diagonal line to mount a contactor.
Mounting holes indicated by ① are compatible with those of SRC type.
Mounting holes indicated by ② are compatible with IEC standard

Magnetic Contactors and Starters
SC and SW series Standard type

■ Dimensions, mm
Starters/Open type

SW-5-1/3H

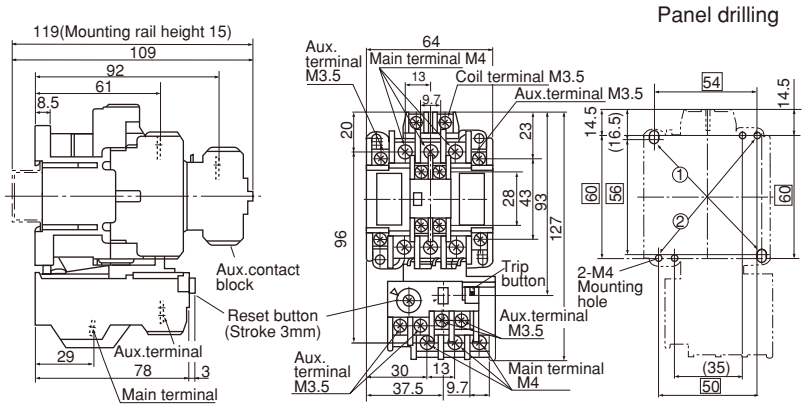

Mass: 0.52kg

SW-N1/3H, SW-N2/3H

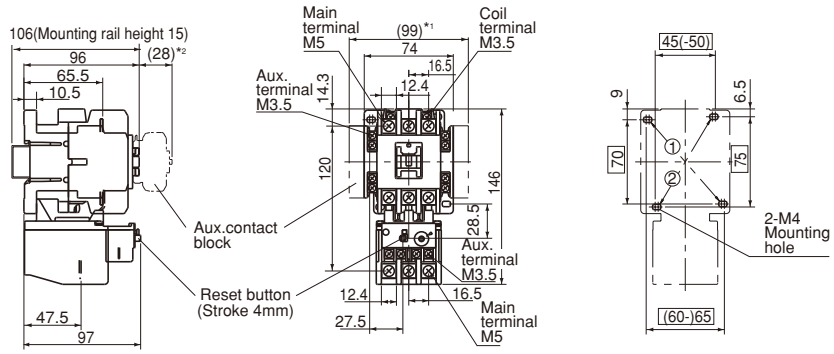

Mass: 0.77kg

SW-N2S/3H, SW-N3/3H

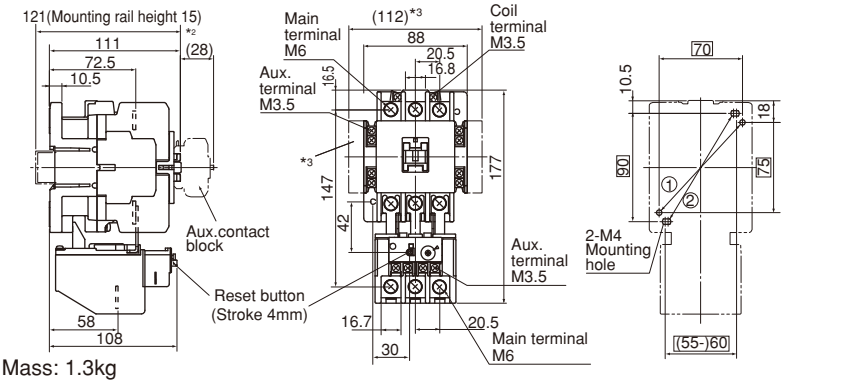

Mass: 1.3kg

SW-N4/3H

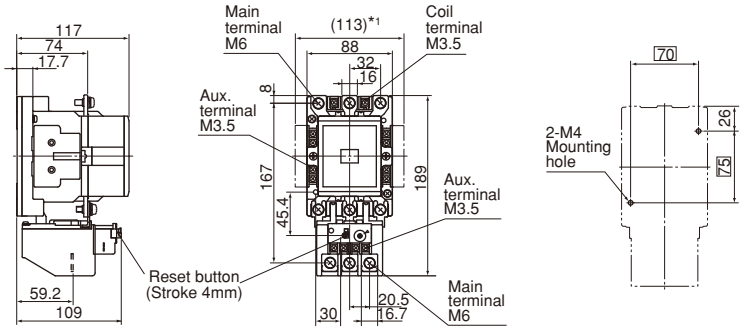

Mass: 1.7kg

■ Wiring diagrams
SW-5-1/3H

Auxiliary contact

2NC+2NO

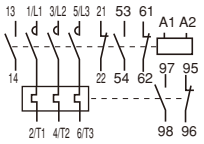

■ Wiring diagrams
SW-N1/3H to SW-N8/3H

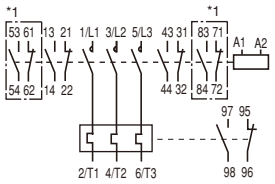

*1 In case of auxiliary contact 4NO+4NC

Note: • Use the two mounting holes on a diagonal line to mount a contactor.
Mounting holes indicated by ① are compatible with those of SRC type.
Mounting holes indicated by ② are compatible with IEC standard
*1 For two side mounting aux. contact blocks mounted
*2 For front mounting aux. contact blocks mounted

Fuji Electric FA Components & Systems Co., Ltd.
Information subject to change without notice

■ Dimensions, mm
Starters/Open type

SW-N5A/3H

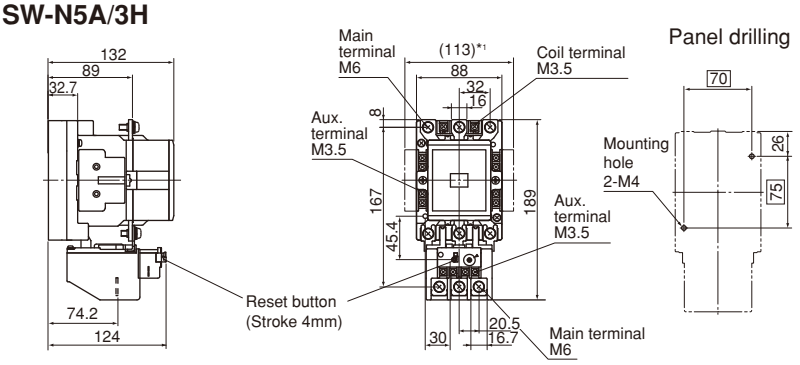

Mass: 1.7kg

SW-N6/3H

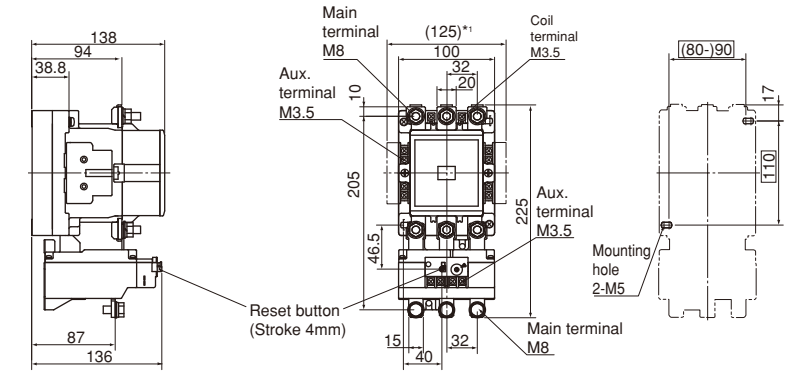

Mass: 3kg

SW-N7/3H

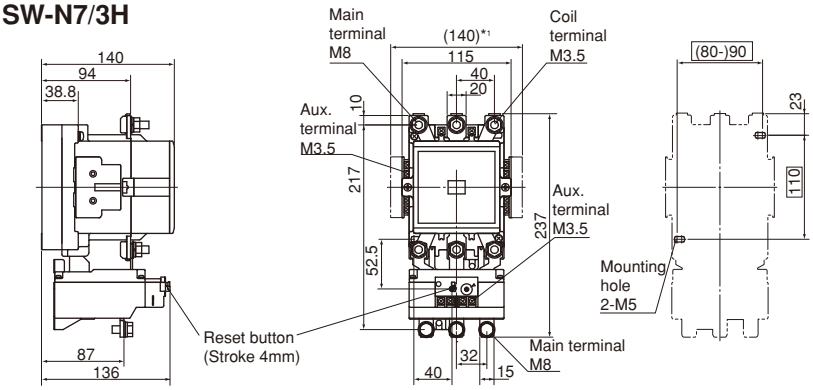

Mass: 3.3kg

SW-N8/3H

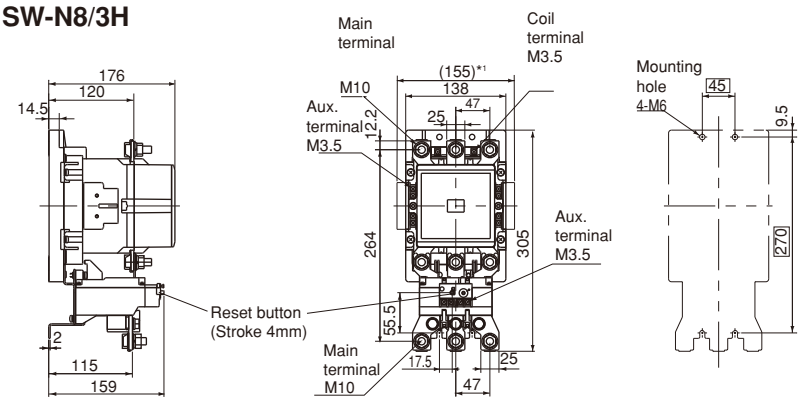

Mass: 6.1kg

Note: *1 For two side mounting aux. contact blocks mounted

Magnetic Contactors and Starters
SC and SW series Standard type

■ Dimensions, mm
Starters/Open type

SW-N10/3H

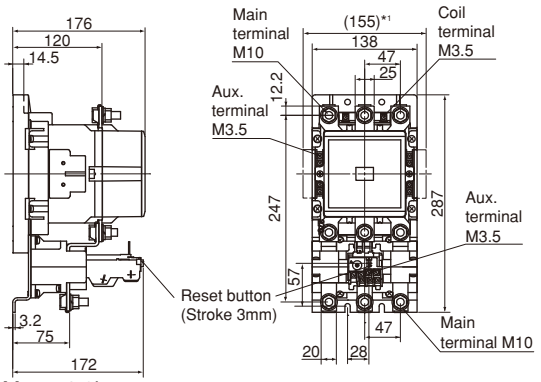

Mass: 6.8kg

Panel drilling

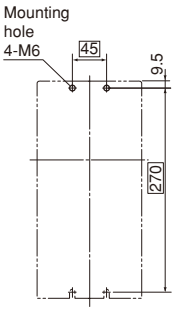

SW-N11/3H, SW-N12/3H

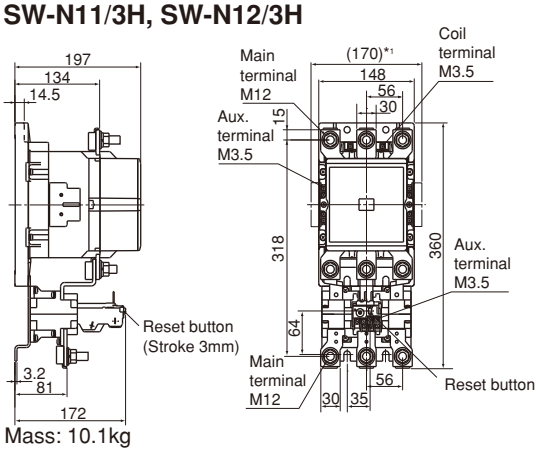

Mass: 10.1kg

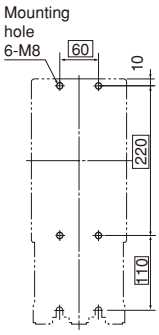

SW-N14/3H

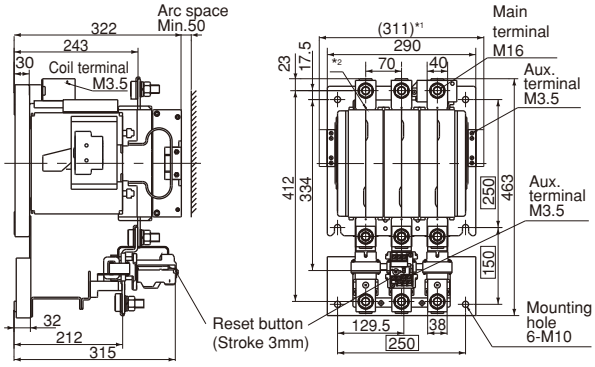

Mass: 37kg

Note: *1 For two side mounting aux. contact blocks mounted
*2 For front mounting aux. contact blocks mounted

■ Wiring diagrams
SW-N10/3H to SW-N14/3H

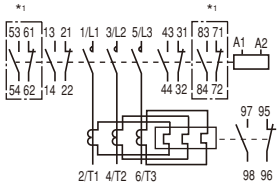

*1 In case of auxiliary contact 4NO+4NC

Starters/Enclosed type

KKD18-026

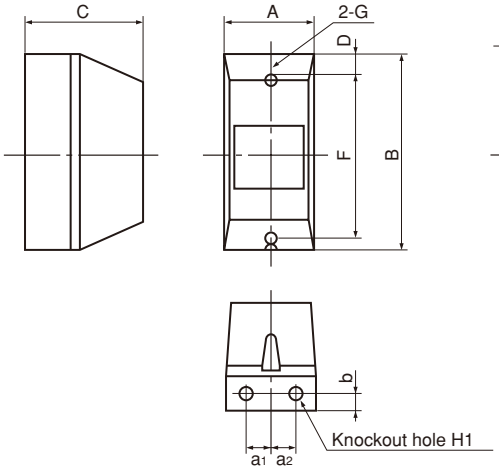

Fig. 1 Plastic enclosure

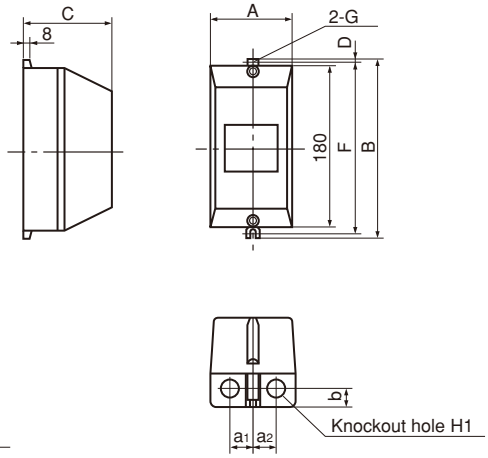

Fig. 2 Plastic enclosure

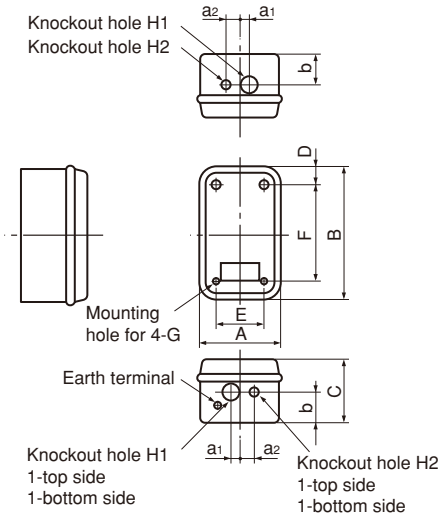

Fig. 3 Steel enclosure

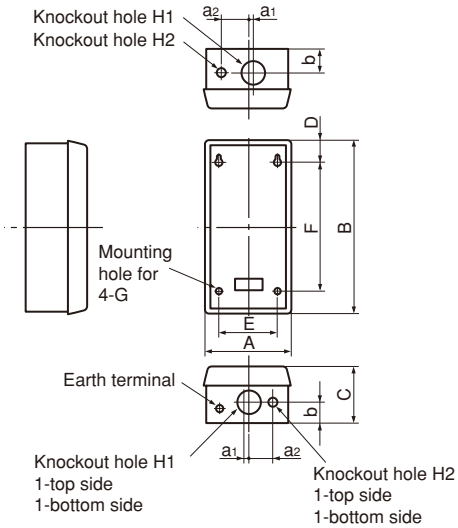

Fig. 4 Steel enclosure

Type	A	B	C	D	E	F	G	Lead hole H1	Lead hole H2	Lead hole a_1	Lead hole a_2	Lead hole b	Mass (kg)	Fig. No.
SW-03C/3H	76	165	94	14.5	–	135	M4	ϕ17	ϕ17	19	19	18.5	0.7	
SW-0C/3H	76	165	94	14.5	–	135	M4	ϕ17	ϕ17	19	19	18.5	0.7	1
SW-05C/3H	76	165	94	14.5	–	135	M4	ϕ17	ϕ17	19	19	18.5	0.72	
SW-4-0C/3H	90	200	94	5	–	190	M4	ϕ21	ϕ21	24	24	22.5	0.80	
SW-4-1C/3H	90	200	94	5	–	190	M4	ϕ21	ϕ21	24	24	22.5	0.80	2
SW-5-1C/3H	90	200	94	5	–	190	M4	ϕ21	ϕ21	24	24	22.5	0.83	
SW-N1C/3H	145	246	132	18	80	210	M6	ϕ28	ϕ28	Top:	20	60	2.0	
SW-N2C/3H	145	246	132	18	80	210	M6	ϕ28	ϕ28	Bottom:	27	60	2.0	
SW-N2SC/3H	175	320	145	35	110	250	M6	ϕ35	ϕ28	15	35	70	3	3
SW-N3C/3H	175	320	145	35	110	250	M6	ϕ35	ϕ28	15	35	70	3	
SW-N4C/3H	200	400	160	37	125	325	M8	ϕ43	ϕ28	20	40	80	4.4	
SW-N5AC/3H	200	400	160	37	125	325	M8	ϕ43	ϕ28	20	40	80	4.4	
SW-N6C/3H	225	450	180	50	150	350	M8	ϕ52	ϕ28	10	70	80	8.4	
SW-N7C/3H	280	560	210	55	175	450	M10	ϕ65	ϕ28	10	80	95	12.3	
SW-N8C/3H	335	670	225	85	200	500	M10	ϕ78	ϕ28	0	100	95	18.1	4
SW-N10C/3H	335	670	225	85	200	500	M10	ϕ78	ϕ28	0	100	95	18.8	
SW-N11C/3H	400	800	250	100	250	600	M10	ϕ105	ϕ28	0	150	100	24.6	
SW-N12C/3H	400	800	250	100	250	600	M10	ϕ105	ϕ28	0	150	100	24.6	

Note: Dimensions of enclosed type contactor SC-03C to SC-N12C are same as those of starters. Contact FUJI for mass.

Magnetic Contactors and Starters
SC and SW series Reversing standard type

Reversing standard type contactors and starters

■ Description

The reversing starter consists of two magnetic contactors and a thermal overload relay. They are suitable for across-the-line starting and reversing of 3-phase squirrel-cage rotor and slip-ring motors.
This starter is provided with a built-in "perfect interlock safety mechanism" which prevents the engagement of forward-reverse contactors simultaneously, as well as electrical interlock.
Where there is a danger of forward– reverse being engaged at the same time, i.e., in the case of power source switching, hoist or machine tool controls, etc. then this type is recommended. The action is simple and positive, and free from trouble in operation.

■ Operating mechanism

When one contactor begins to move the other contactor is locked in position. An arm is used to actuate each contactor so that there is no possibility of double engagement.

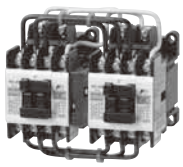

KKD06-062

SC-03RM

AF00-247

SW-N6RM/3H

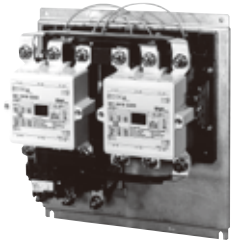

AF00-287

SW-N10RM/3H

■ Ratings of auxiliary contact and coil:

See pages A1-20 and A1-22.

■ Performance data:

Same as standard open type.
See page A1-22.

■ Ordering information

Specify the following:
1. Ordering code
2. Overload relay setting range code
3. Operating coil voltage code
4. Auxiliary contact arrangement as shown in the table below.
   Example: (2NO + 2NC) × 2

Mechanism principle (Explanation only)

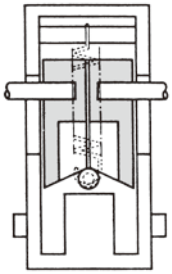

Both contactors open position

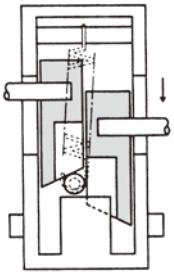

Forward contactor closed position

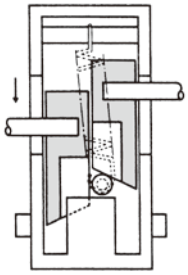

Reverse contactor closed position

■ Types and ratings

Max. motor capacity (kw) 200V 240V	380V 440V	Rated operation current (A) 200V 240V	380V 440V	Auxiliary contact	Contactor Open Type	Ordering code	Starter (3-element) Open Type	Ordering code	Enclosed Type	Ordering code
2.5	4	11	9	1NC×2*1	**SC-03RM**	SC11RA-■01	**SW-03RM/3H**	SC11RAN-■01T□D	**SW-03RMC/3H**	SC11MAN-■01T□D
3.5	5.5	13	12	1NC×2*1	**SC-0RM**	SC13RA-■01	**SW-0RM/3H**	SC13RAN-■01T□D	**SW-0RMC/3H**	SC13MAN-■01T□D
3.5	5.5	13	12	(1NO+1NC)×2*2	**SC-05RM**	SC14RA-■11	**SW-05RM/3H**	SC14RAN-■11T□D	**SW-05RMC/3H**	SC14MAN-■11T□D
4.5	7.5	18	16	1NC×2*1	**SC-4-0RM**	SC18RA-■01	**SW-4-0RM/3H**	SC18RAN-■01T□D	**SW-4-0RMC/3H**	SC18MAN-■01T□D
5.5	11	22	22	1NC×2*1	**SC-4-1RM**	SC19RA-■01	**SW-4-1RM/3H**	SC19RAN-■01T□D	**SW-4-1RMC/3H**	SC19MAN-■01T□D
5.5	11	22	22	(1NO+1NC)×2*3	**SC-5-1RM**	SC20RA-■11	**SW-5-1RM/3H**	SC20RAN-■11T□D	**SW-5-1RMC/3H**	SC20MAN-■11T□D
7.5	15	32	32	(2NO+2NC)×2*3	**SC-N1RM**	SC25BRA-■22	**SW-N1RM/3H**	SC25BRAN-■22T□D	**SW-N1RMC/3H**	SC25BMAN-■22T□D
11	18.5	40	40	(2NO+2NC)×2*3	**SC-N2RM**	SC35BRA-■22	**SW-N2RM/3H**	SC35BRAN-■22T□D	**SW-N2RMC/3H**	SC35BMAN-■22T□D
15	22	50	50	(2NO+2NC)×2*3	**SC-N2SRM**	SC50BRA-■22	**SW-N2SRM/3H**	SC50BRAN-■22T□D	**SW-N2SRMC/3H**	SC50BMAN-■22T□D
18.5	30	65	65	(2NO+2NC)×2*3	**SC-N3RM**	SC65BRA-■22	**SW-N3RM/3H**	SC65BRAN-■22T□D	**SW-N3RMC/3H**	SC65BMAN-■22T□D
22	40	80	80	(2NO+2NC)×2*3	**SC-N4RM**	SC80BRA-■22	**SW-N4RM/3H**	SC80BRAN-■22T□D	**SW-N4RMC/3H**	SC80BMAN-■22T□D
30	55	105	105	(2NO+2NC)×2*3	**SC-N5ARM**	SC93CRA-■22	**SW-N5ARM/3H**	SC93CRAN-■22T□D	**SW-N5ARMC/3H**	SC93CMAN-■22T□D
37	60	125	125	(2NO+2NC)×2*3	**SC-N6RM**	SC1CBRA-■22	**SW-N6RM/3H**	SC1CBRAN-■22T□D	**SW-N6RMC/3H**	SC1CBMAN-■22T□D
45	75	150	150	(2NO+2NC)×2*3	**SC-N7RM**	SC1FBRA-■22	**SW-N7RM/3H**	SC1FBRAN-■22T□D	**SW-N7RMC/3H**	SC1FBMAN-■22T□D
55	90	180	180	(2NO+2NC)×2*3	**SC-N8RM**	SC1JBRA-■22	**SW-N8RM/3H**	SC1JBRAN-■22T□D	**SW-N8RMC/3H**	SC1JBMAN-■22T□D
65	110	220	220	(2NO+2NC)×2*3	**SC-N10RM**	SC2CBRA-■22	**SW-N10RM/3H**	SC2CBRAN-■22T□D	**SW-N10RMC/3H**	SC2CBMAN-■22T□D
90	160	300	300	(2NO+2NC)×2*3	**SC-N11RM**	SC3ABRA-■22	**SW-N11RM/3H**	SC3ABRAN-■22T□D		
120	220	400	400	(2NO+2NC)×2*3	**SC-N12RM**	SC4ABRA-■22	**SW-N12RM/3H**	SC4ABRAN-■22T□D		
180	315	600	600	(2NO+2NC)×2*3	**SC-N14RM**	SC6ABRA-■22	**SW-N14RM/3H**	SC6ABRAN-■22T□D		

Notes: 1. ■ : Coil voltage code. □ : Thermal overload relay ampere setting range code, *See page A1-19.*
2. *1: Auxiliary contact 1NO×2 is available on request. However, these contactors are not electrically interlocked.
Be sure to arrange electrical interlock circuit externally to avoid short-circuit accidents.
*2: Auxiliary contact 2NC×2 is available on request.
*3: Auxiliary contact (3NO+3NC)×2 is available on request for frame size N1 and above.
Auxiliary contact (4NO+4NC)×2 is available on request for frame size N1 to N3.
3. Contactor with enclosure is available on request.

Fuji Electric FA Components & Systems Co., Ltd.
Information subject to change without notice

■ Dimensions, mm
Reversing contactors/Open type

SC-03RM, SC-0RM

Panel drilling

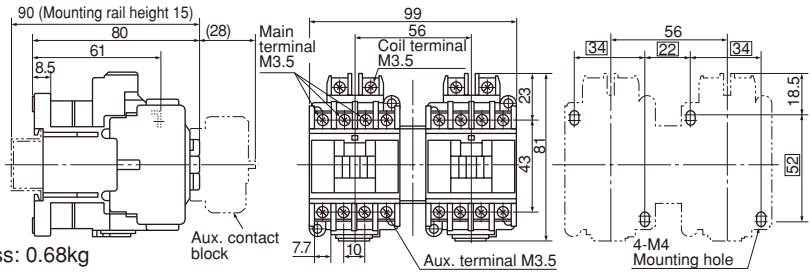

Mass: 0.68kg

SC-05RM

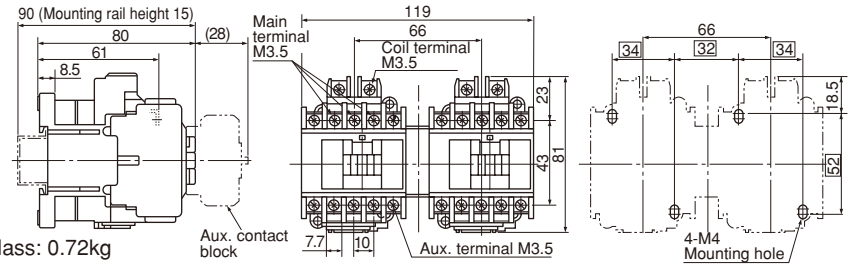

Mass: 0.72kg

SC-4-0RM, SC-4-1RM

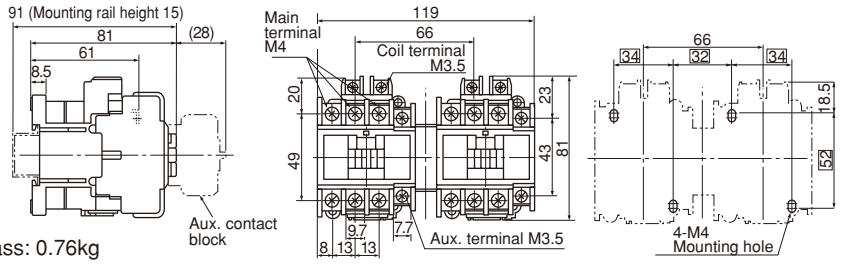

Mass: 0.76kg

SC-5-1RM

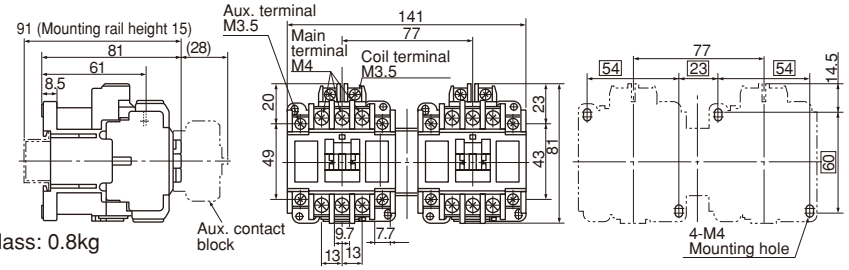

Mass: 0.8kg

SC-N1RM, SC-N2RM

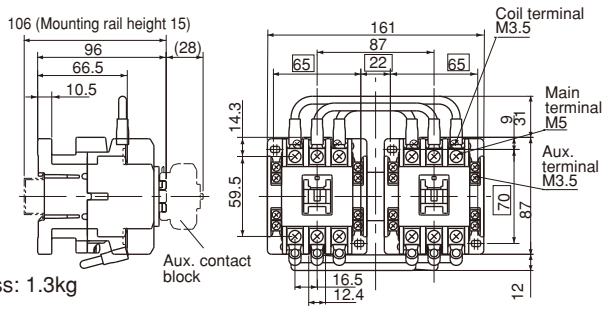

Mass: 1.3kg

■ Wiring diagrams

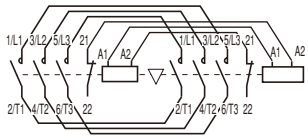

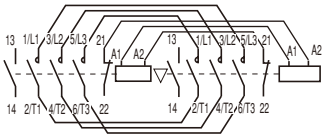

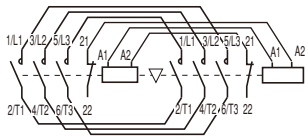

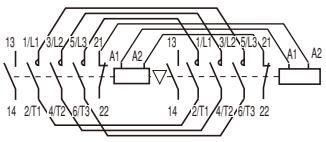

■ Wiring diagrams

SC-N1RM to SC-N3RM

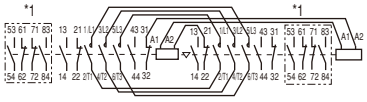

*1 In case of auxiliary contact 4NO+4NC

SC-N4RM to SC-N14RM

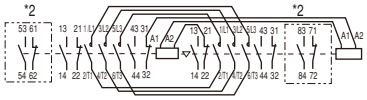

*2 In case of auxiliary contact 3NO+3NC

Magnetic Contactors and Starters
SC and SW series Reversing standard type

■ Dimensions, mm
Reversing contactors/Open type

SC-N2SRM, SC-N3RM

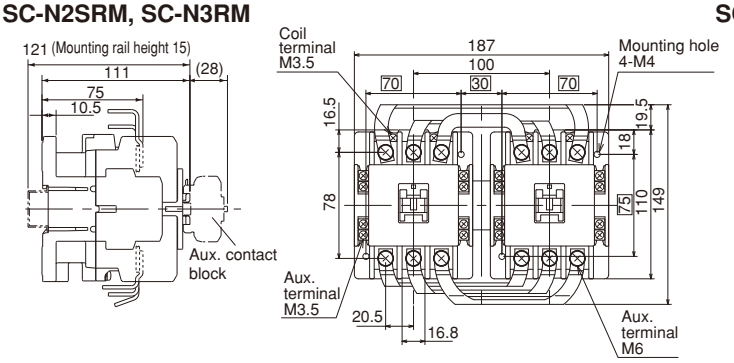

Mass: 2.3kg

SC-N7RM

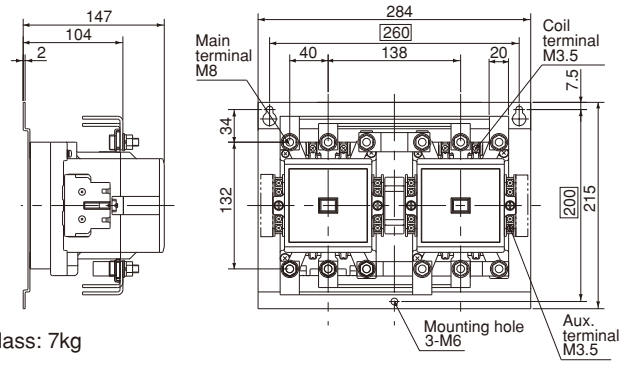

Mass: 7kg

SC-N4RM

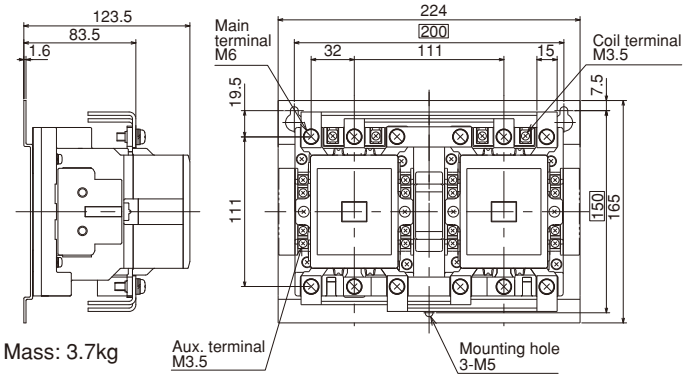

Mass: 3.7kg

SC-N8RM, SC-N10RM

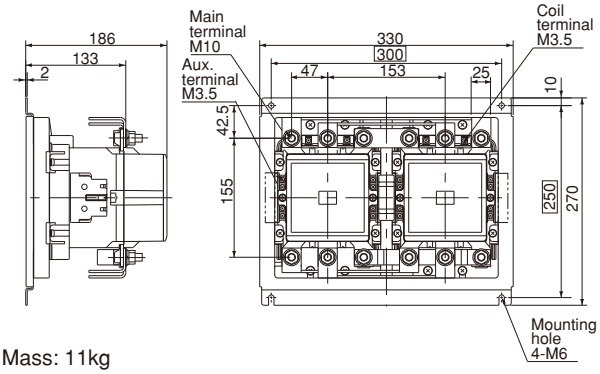

Mass: 11kg

SC-N5ARM

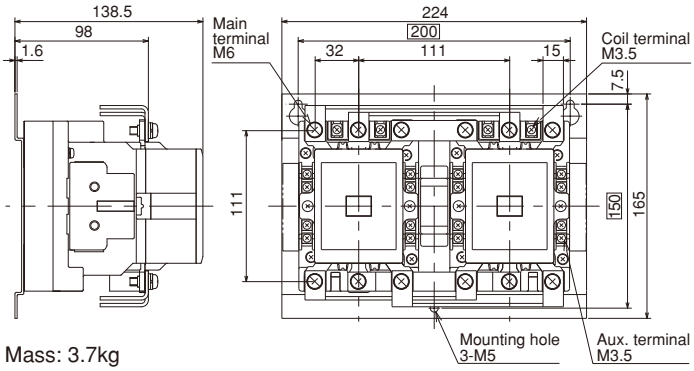

Mass: 3.7kg

SC-N11RM, SC-N12RM

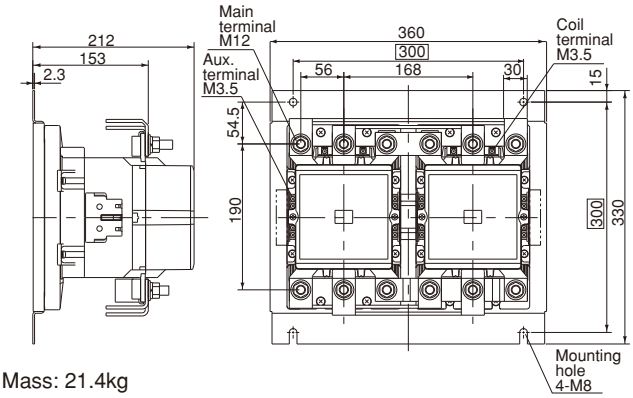

Mass: 21.4kg

SC-N6RM

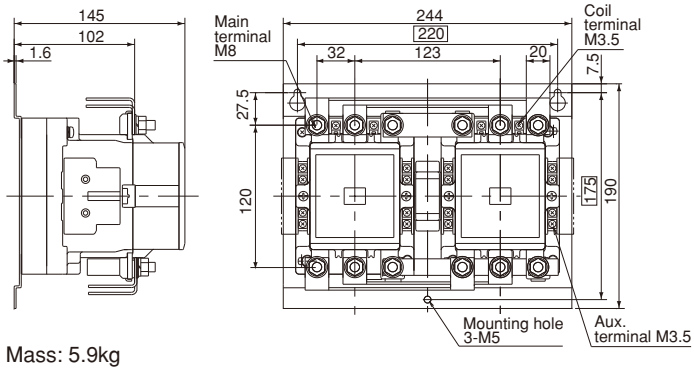

Mass: 5.9kg

SC-N14RM

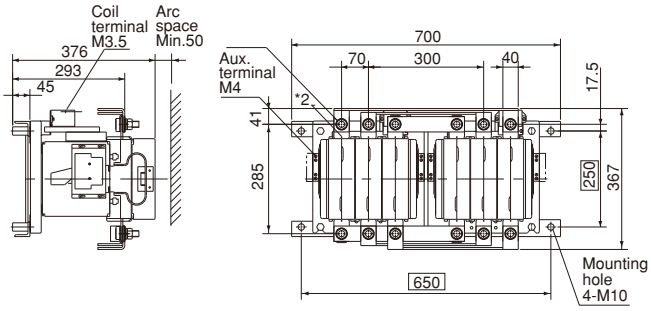

Mass: 80kg

*2 M4 tap for control circuit

Fuji Electric FA Components & Systems Co., Ltd.
Information subject to change without notice

■ Dimensions, mm
Reversing motor starters/Open type

■ Wiring diagrams

SW-03RM/3H, SW-0RM/3H

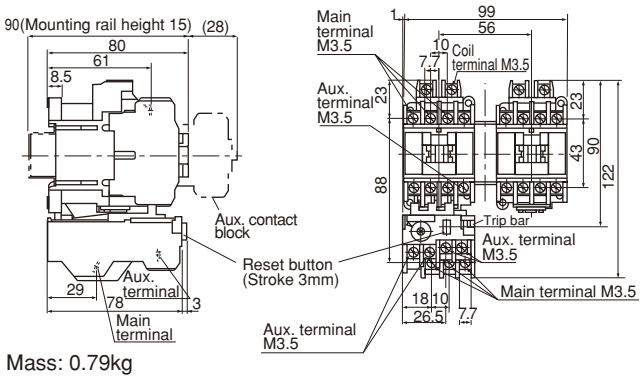

Panel drilling

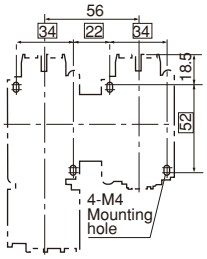

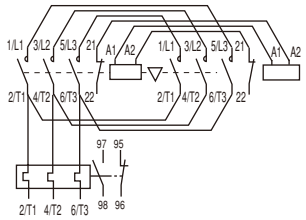

Mass: 0.79kg

SW-05RM/3H

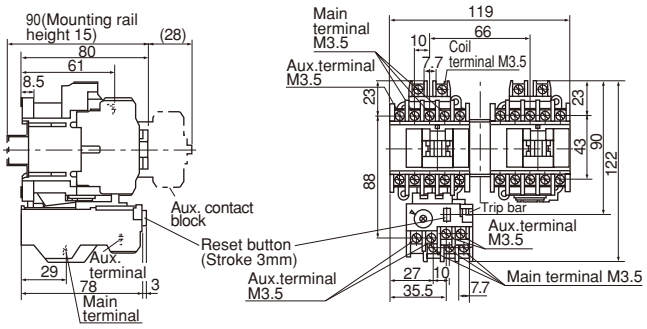

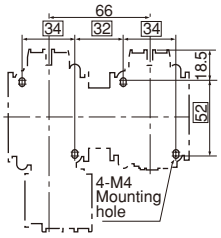

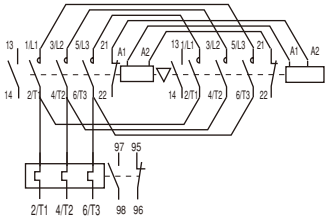

Mass: 0.83kg

SW-4-0RM/3H, SW-4-1RM/3H

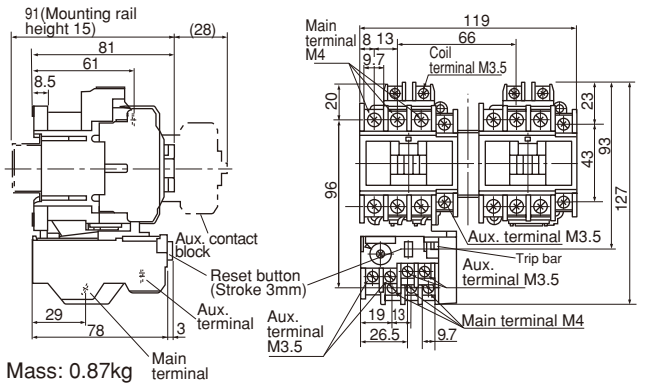

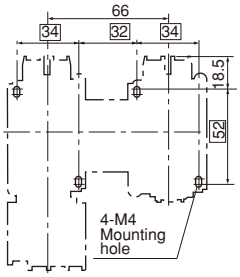

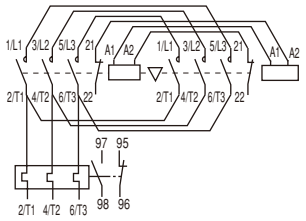

Mass: 0.87kg

SW-5-1RM/3H

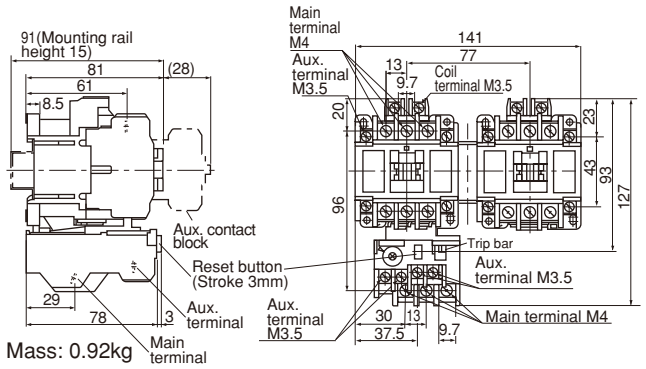

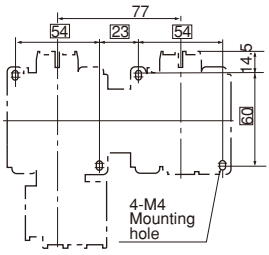

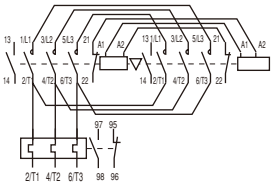

Mass: 0.92kg

■ Dimensions, mm
Reversing motor starters/Open type

SW-N1RM/3H, SW-N2RM/3H

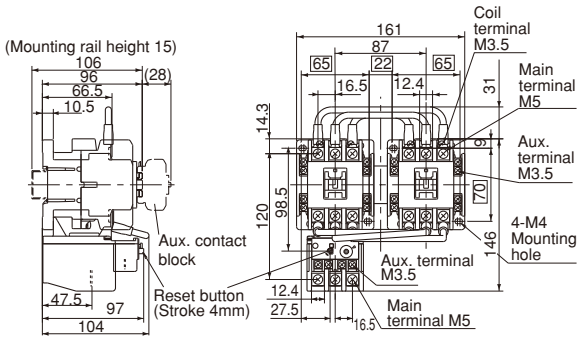

Mass: 1.5kg

SW-N6RM/3H

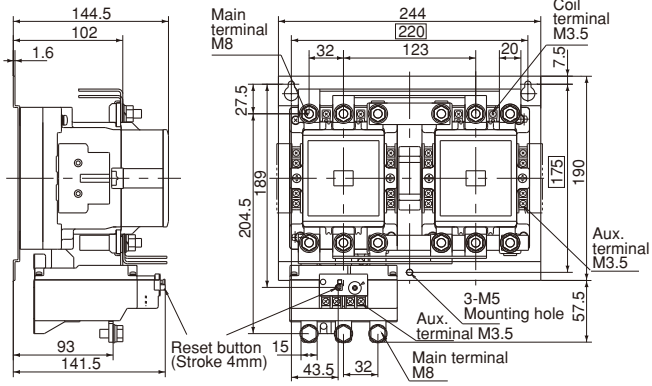

Mass: 6.5kg

SW-N2SRM/3H, SW-N3RM/3H

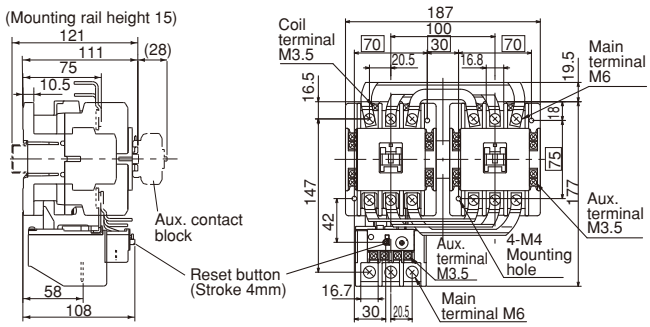

Mass: 2.6kg

SW-N7RM/3H

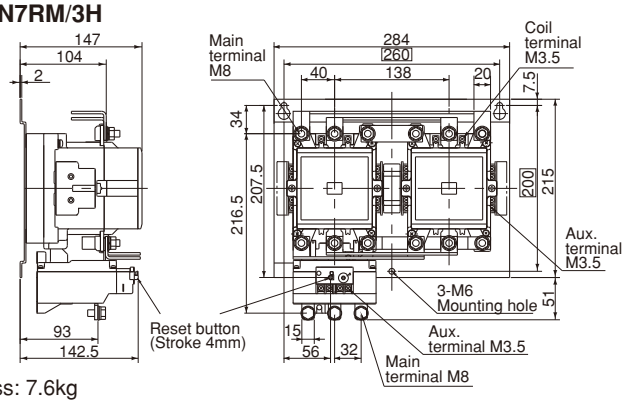

Mass: 7.6kg

SW-N4RM/3H

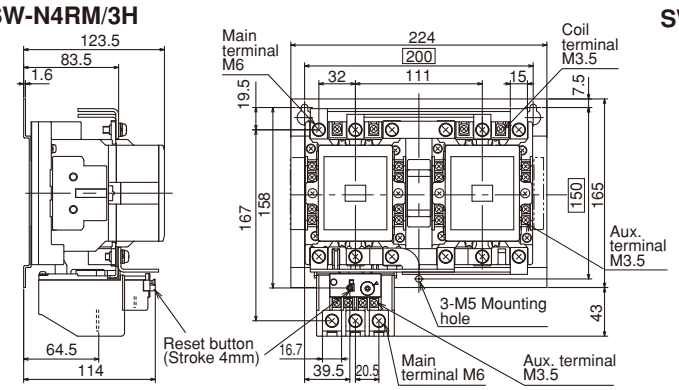

Mass: 4kg

SW-N8RM/3H

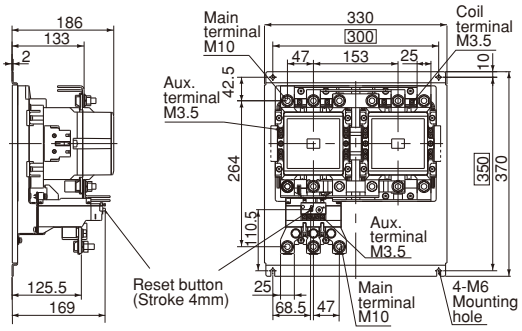

Mass: 12.2kg

SW-N5ARM/3H

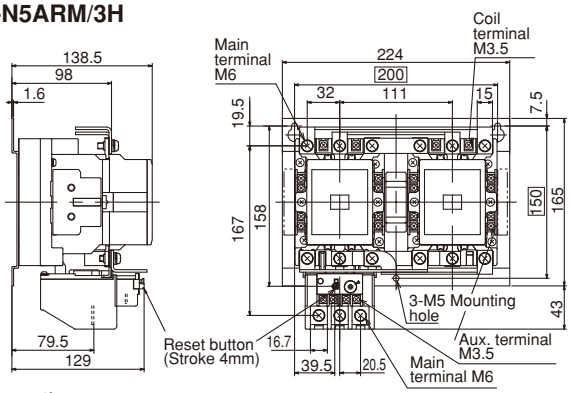

Mass: 4kg

SW-N10RM/3H

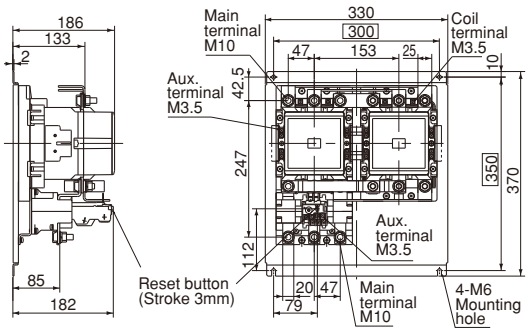

Mass: 12.9kg

■ Dimensions, mm
Reversing motor starters/Open type

SW-N11RM/3H, SW-N12RM/3H

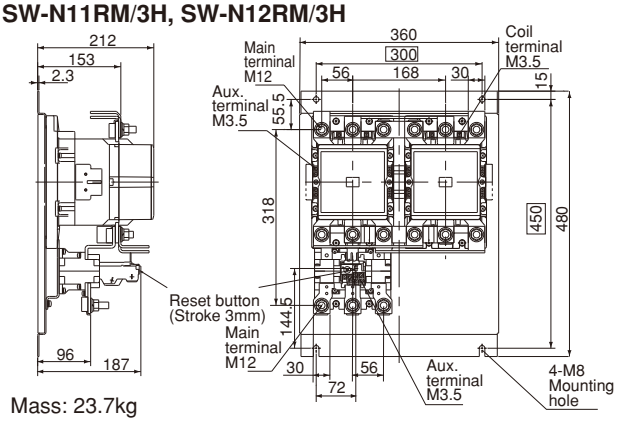

Mass: 23.7kg

SW-N14RM/3H

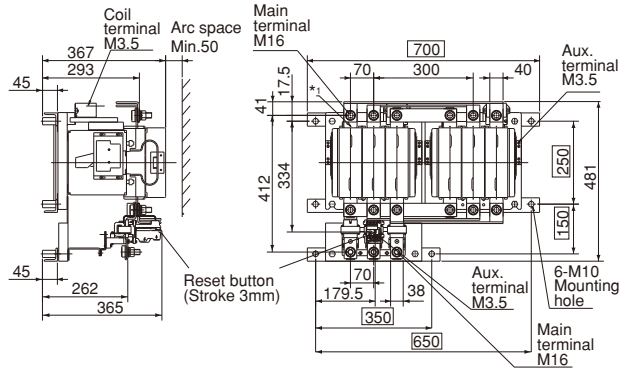

Mass: 85kg

*1 M4 tap for control circuit

■ Wiring diagrams
SW-N1RM/3H to SW-N8RM/3H

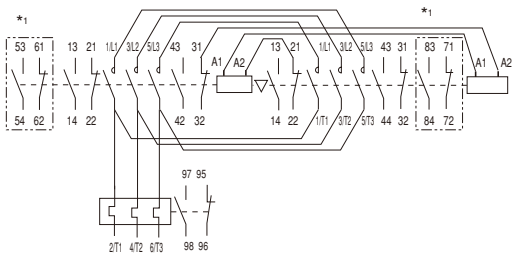

*1 In case of auxiliary contact 3NO+3NC

SW-N10RM/3H to SW-N12RM/3H

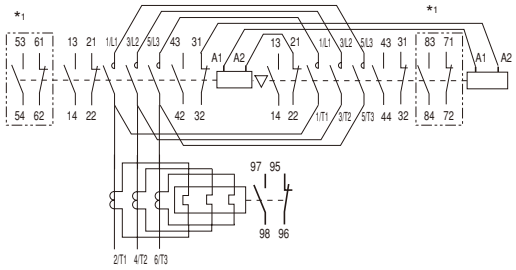

*1 In case of auxiliary contact 3NO+3NC

SW-N14RM/3H

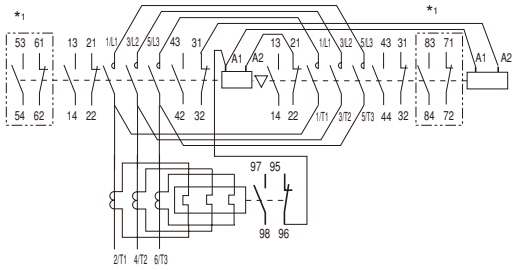

*1 In case of auxiliary contact 3NO+3NC

Magnetic Contactors and Starters
SC and SW series Reversing standard type

■ Dimensions, mm
Reversing motor starters/Enclosed type

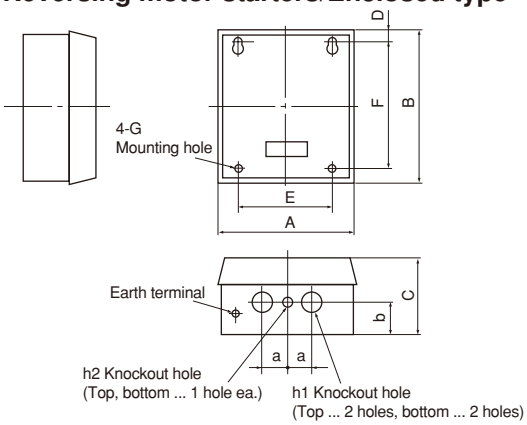

Type	A	B	C	D	E	F	G	h1	h2	a	b	Mass (kg) 3-element
SW-03RMC/3H	192	192	100	16	130	160	4-M6	ϕ22	–	65	65	1.9
SW-0RMC/3H	192	192	100	16	130	160	4-M6	ϕ22	–	65	65	1.9
SW-05RMC/3H	192	192	100	16	130	160	4-M6	ϕ22	–	65	65	1.9
SW-4-0RMC/3H	192	192	100	16	130	160	4-M6	ϕ22	–	65	65	1.95
SW-4-1RMC/3H	192	192	100	16	130	160	4-M6	ϕ22	–	65	65	1.95
SW-5-1RMC/3H	192	192	100	16	130	160	4-M6	ϕ22	–	65	65	2.0
SW-N1RMC/3H	254	250	131	20	185	210	4-M6	ϕ28	–	80	70	3.8
SW-N2RMC/3H	254	250	131	20	185	210	4-M6	ϕ28	–	80	70	3.8
SW-N2SRMC/3H	280	320	145	35	200	250	4-M6	ϕ35	ϕ28	55	70	6.6
SW-N3RMC/3H	280	320	145	35	200	250	4-M6	ϕ35	ϕ28	55	70	6.6
SW-N4RMC/3H	355	400	160	37.5	250	325	4-M8	ϕ43	ϕ28	65	80	10.7
SW-N5ARMC/3H	355	400	160	37.5	250	325	4-M8	ϕ43	ϕ28	65	80	11.4
SW-N6RMC/3H	400	450	180	50	300	350	4-M8	ϕ52	ϕ28	85	80	14.3
SW-N7RMC/3H	450	560	210	55	350	450	4-M10	ϕ65	ϕ28	90	95	21.5
SW-N8RMC/3H	500	670	225	85	400	500	4-M10	ϕ78	ϕ28	90	105	29.4
SW-N10RMC/3H	500	670	225	85	400	500	4-M10	ϕ78	ϕ28	90	105	32.4

Notes: • SW-5-1RMC/3H with aux. contact 2×2NO·2NC is not availale.
• Dimensions of enclosed type contactor SC-03RMC to SC-N10RMC/3H are same as those of starters. Contact FUJI for mass.

DC operated contactors and starters

Up to 37kW 440 Volts

■ Description

In most cases general purpose AC magnetic motor starters employ AC coils, and although "AC motor with AC controls" is the normal practice, in complicated controls troubles can be expected due to the instantaneous voltage drop or power failure in the AC power source. Thus, in some applications "AC motor with DC control" offers a better system.
FUJI manufactures two types of DC operated contactors. In one type the ON/OFF operation is carried out by a DC operating coil. The other type is operated by the SUPER MAGNET. The SC-03/G to N3/G types use the single coil system. They can be operated at full voltage. When requiring the DC operation for SC-N1 to N4 contactor, the contactor with SUPER MAGNET is substituted(SC-N1/SE to N4/SE).
AC/DC operated types with SUPER MAGNET
• SC-N1/SE to N4/SE, SW-N1/SE to N4/SE
• SC-N5 to N16, SW-N5/3H to 14/3H
These standard types employ the SUPER MAGNET.

■ Ordering information

Specify the following:
1. Ordering code
2. Operating coil voltage code
3. Contact arrangement:
   In the case of the frame size 0/G to 5-1/G, specify the contact arrangement.
4. Overload relay setting range code.

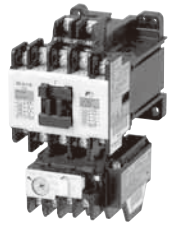
KKD05-286
SW-5-1/G3H

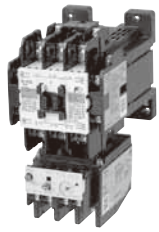
KKD05-289
SW-N2/G3H

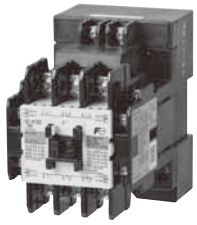
KKD06-026
SC-N1/SE

■ Coil ratings

Type	Coil voltage (V DC)	Power consumption Inrush (W)	Power consumption Sealed (W)	Operating characteristic Pick-up voltage (V)	Operating characteristic Drop-out voltage (V)
SC-03/G	12, 24, 48, 60,	7	7	10–15	3–7
SC-0/G	100, 110, 120	7	7	10–15	3–7
SC-05/G	200, 210, 220	7	7	10–15	3–7
SC-4-0/G		7	7	11–16	3–7
SC-4-1/G		7	7	11–16	3–7
SC-5-1/G		7	7	11–16	3–8
SC-N1/G		9	9	9–15	3–9
SC-N2/G		9	9	9–15	3–9
SC-N2S/G		12	12	9–15	3–8
SC-N3/G		12	12	9–15	3–8
SC-N4/G		20	20	10–15	3–8
SC-N5/G		20	20	10–15	3–8
SC-N1/SE	24, 48	145	2.4	16–19	4–12
SC-N2/SE	100–120 *1	145	2.4	16–19	4–12
SC-N2S/SE	200–240 *2	175	2.0	16–19	4–12
SC-N3/SE		175	2.0	16–19	4–12
SC-N4/SE		100	2.8	16–19	4–12
SC-N5		100	2.8	16–19	4–12

Notes: Operating coil voltage 24V DC for 03/G to N5/G
24V DC for N1/SE to N4/SE, N5
*1 The coil voltage from a DC power supply with single phase full-wave rectification will be 100 to 110 V.
*2 The coil voltage from a DC power supply with single phase full-wave rectification will be 200 to 220 V.

■ UL, CSA, TÜV and CCC approved:

See page A1-119, 127, 131.

■ Auxiliary contact

Same as standard type, *See page A1-20.*

■ Ratings

Max. motor capacity (kW) 200V 240V	380V 440V	Operational current (A) 200V 240V	380V 440V	Thermal current (A)	Auxiliary contact NO	NC	Contactor Type	Ordering code	Starter (3-element) Type	Ordering code
2.5	4	11	9	20	1	–*1	**SC-03/G**	**SC11AG-■10**	**SW-03/G3H**	**SC11AGN-■10T□D**
3.5	5.5	13	12	20	1	–*1	**SC-0/G**	**SC13AG-■10**	**SW-0/G3H**	**SC13AGN-■10T□D**
3.5	5.5	13	12	20	1	1*2	**SC-05/G**	**SC14AG-■11**	**SW-05/G3H**	**SC14AGN-■11T□D**
4.5	7.5	18	16	25	1	–*1	**SC-4-0/G**	**SC18AG-■10**	**SW-4-0/G3H**	**SC18AGN-■10T□D**
5.5	11	22	22	32	1	–*1	**SC-4-1/G**	**SC19AG-■10**	**SW-4-1/G3H**	**SC19AGN-■10T□D**
5.5	11	22	22	32	1	1*3	**SC-5-1/G**	**SC20AG-■11**	**SW-5-1/G3H**	**SC20AGN-■11T□D**
7.5	15	32	32	50	2	2	**SC-N1/G**	**SC25BAG-■22**	**SW-N1/G3H**	**SC25BAGN-■22T□D**
11	18.5	40	40	60	2	2	**SC-N2/G**	**SC35BAG-■22**	**SW-N2/G3H**	**SC35BAGN-■22T□D**
15	22	50	50	80	2	2	**SC-N2S/G**	**SC50BAG-■22**	**SW-N2S/G3H**	**SC50BAGN-■22T□D**
18.5	30	65	65	100	2	2	**SC-N3/G**	**SC65BAG-■22**	**SW-N3/G3H**	**SC65BAGN-■22T□D**
22	40	80	80	135	2	2	**SC-N4/G**	**SC80BAG-■22**	**SW-N4/G3H**	**SC80BAGN-■22T□D**
30	55	105	105	150	2	2	**SC-N5/G**	**SC93BAG-■22**	**SW-N5/G3H**	**SC93BAGN-■22T□D**
7.5	15	32	32	50	2	2	**SC-N1/SE**	**SC25BAS-■22**	**SW-N1/SE3H**	**SC25BASN-■22T□D**
11	18.5	40	40	60	2	2	**SC-N2/SE**	**SC35BAS-■22**	**SW-N2/SE3H**	**SC35BASN-■22T□D**
15	22	50	50	80	2	2	**SC-N2S/SE**	**SC50BAS-■22**	**SW-N2S/SE3H**	**SC50BASN-■22T□D**
18.5	30	65	65	100	2	2	**SC-N3/SE**	**SC65BAS-■22**	**SW-N3/SE3H**	**SC65BASN-■22T□D**
22	40	80	80	135	2	2	**SC-N4/SE**	**SC80BAS-■22**	**SW-N4/SE3H**	**SC80BASN-■22T□D**
30	55	105	105	150	2	2	**SC-N5**	**SC93BAA-■22**	**SW-N5/3H**	**SC93BAAN-■22T□D**

Notes: 1. ■ : Coil voltage code, □: Thermal overload relay ampere setting range code, *see page A1-19*
2. *1 Auxiliary contact 1NC is available. *2 Auxiliary contact 2NO or 2NC is available. *3 Auxiliary contact 2NO, 2NC, or 2NO+2NC is available. For enclosed type, 2NO+2NC is not available
3. Auxiliary contact 4NO+4NC is available on request for frame size N1 and above.

Magnetic Contactors and Starters
SC and SW series DC operated

■ Dimensions
DC operated contactors

SC-03/G, SC-0/G

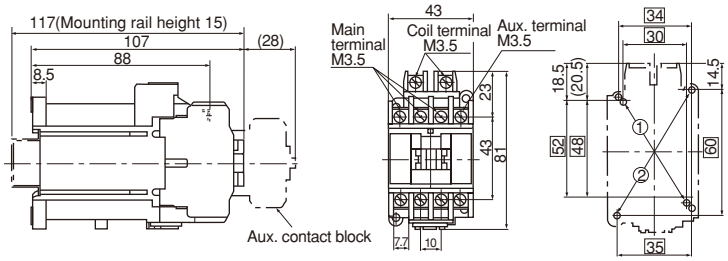

Mass:0.55kg

SC-05/G

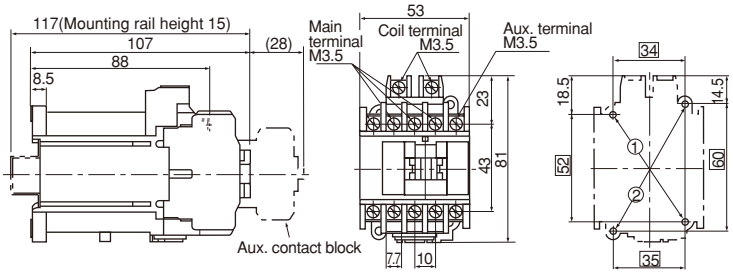

Mass:0.58kg

SC-4-0/G, SC-4-1/G

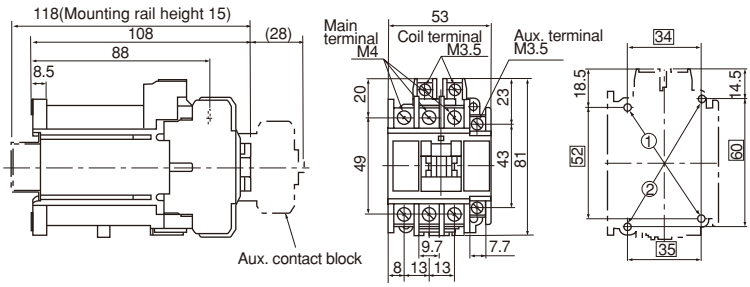

Mass:0.6kg

SC-5-1/G

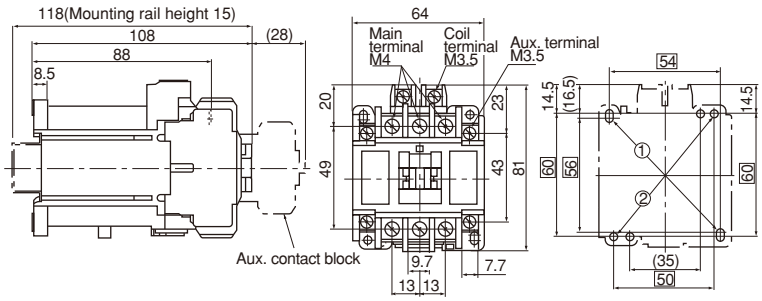

Mass:0.62kg

■ Wiring diagrams

Auxiliary contact

1NO

1NC

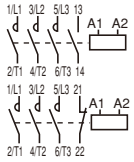

2NO

1NO+1NC

2NC

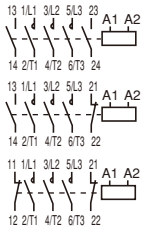

1NO

1NC

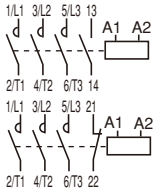

2NO

1NO+1NC

2NC

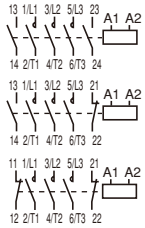

Note: Use the two mounting holes on a diagonal line to mount a contactor.
Mounting holes indicated by ① are compatible with those of SRC type.
Mounting holes indicated by ② are compatible with IEC standard

■ Dimensions
DC operated contactors

SC-N1/G, SC-N2/G

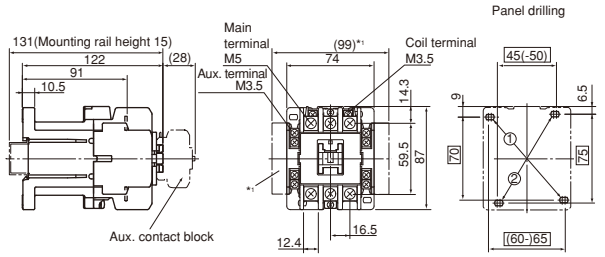

*1 For two side mounting aux. contact blocks mounted

Mass: 0.82kg

SC-N2S/G, SC-N3/G

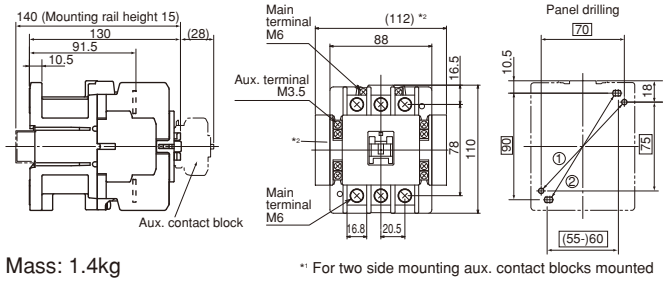

*1 For two side mounting aux. contact blocks mounted

Mass: 1.4kg

SC-N4/G, SC-N5/G

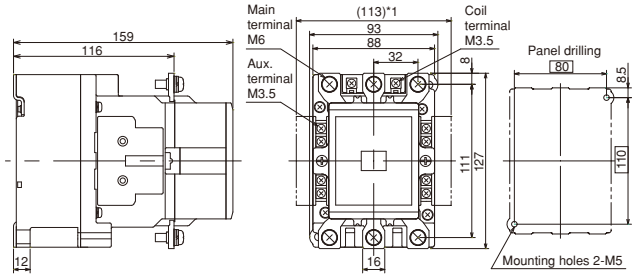

*1 For two side mounting aux. contact blocks mounted

Mass: 2.3kg

■ Wiring diagrams
SC-N1/G to SC-N5/G

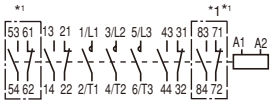

*1 In case of auxiliary contact 4NO+4NC

DC operated starters
SW-03/G3H, SW-0/G3H

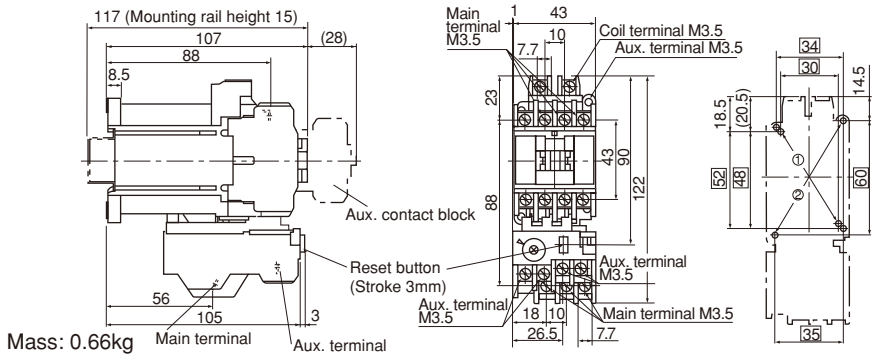

Mass: 0.66kg

■ Wiring diagrams

Auxiliary contact

1NO

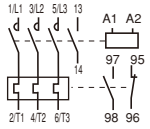

1NC

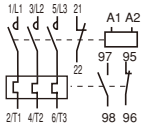

SW-05/G3H

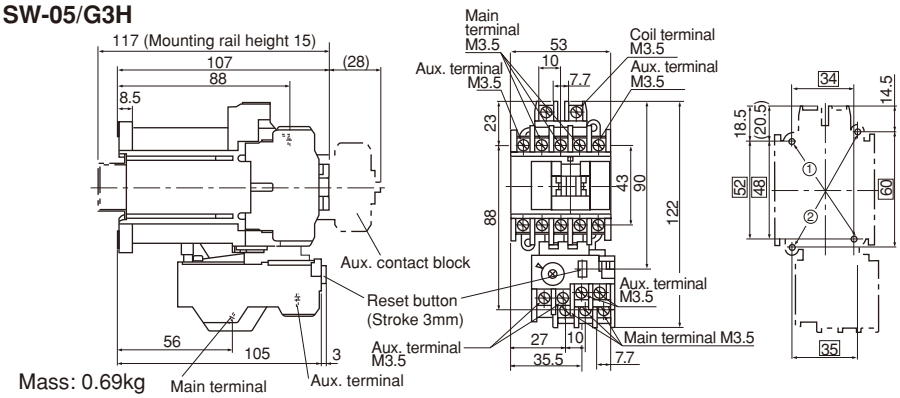

Mass: 0.69kg

2NO

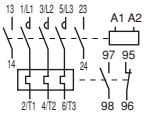

1NO+1NC

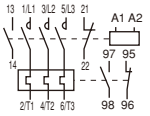

2NC

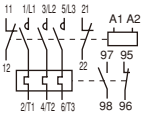

Note: Use the two mounting holes on a diagonal line to mount a contactor.
Mounting holes indicated by ① are compatible with those of SRC type.
Mounting holes indicated by ② are compatible with IEC standard

Magnetic Contactors and Starters
SC and SW series DC operated

■ Dimensions
DC operated starters

SW-4-0/G3H, SW-4-1/G3H

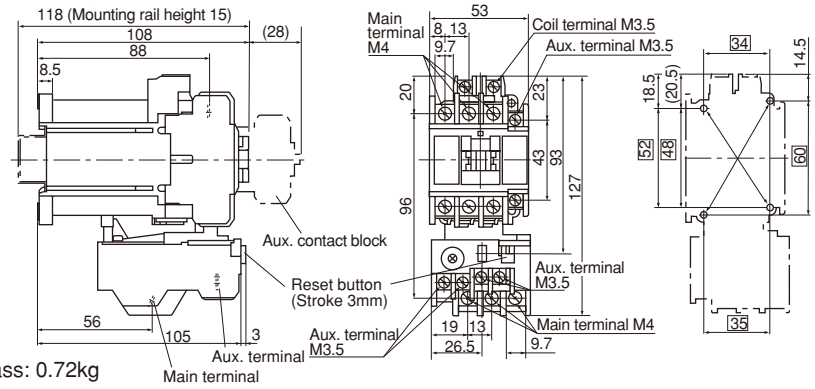

Mass: 0.72kg

SW-5-1/G3H

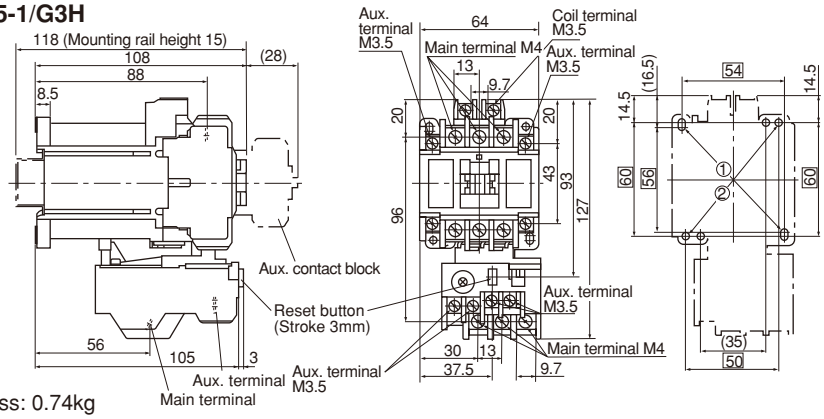

Mass: 0.74kg

■ Wiring diagrams

Auxiliary contact

1NO

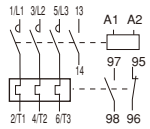

1NC

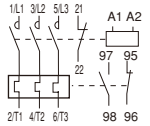

2NO

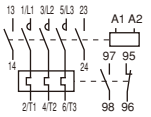

1NO+1NC

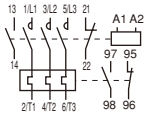

2NC

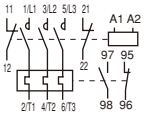

SW-N1/G3H, SW-N2/G3H

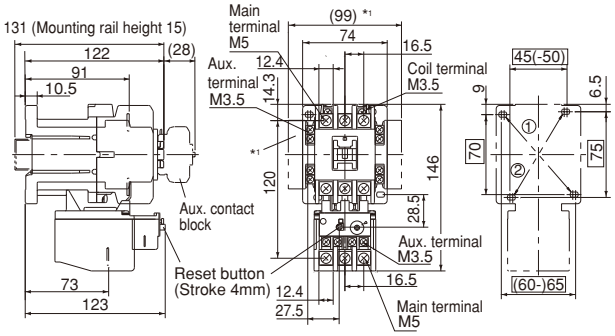

Mass: 1kg

SW-N4/G3H, SW-N5/G3H

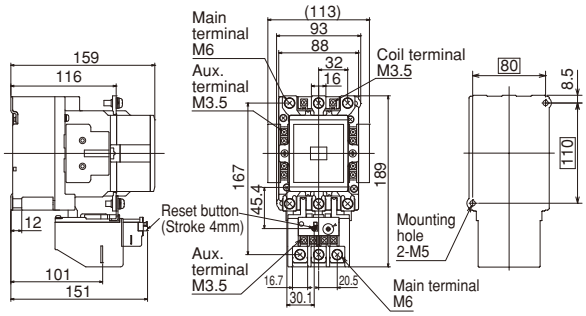

Mass: 2.6kg

SW-N2S/G3H, SW-N3/G3H

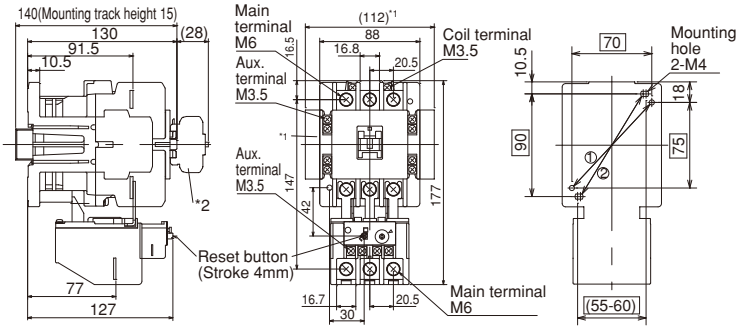

Mass: 1.6kg

■ Wiring diagrams
SW-N1/G3H to SW-N5/G3H

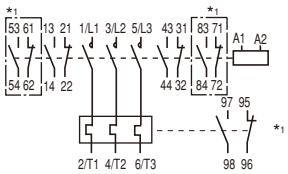

*1 In case of auxiliary contact 4NO+4NC

Note: • Use the two mounting holes on a diagonal line to mount a contactor.
Mounting holes indicated by ① are compatible with those of SRC type.
Mounting holes indicated by ② are compatible with IEC standard
*1 For two side mounting aux. contact blocks mounted
*2 For front mounting aux. contact blocks mounted

■ Dimensions
DC operated contactors

SC-N1/SE, SC-N2/SE

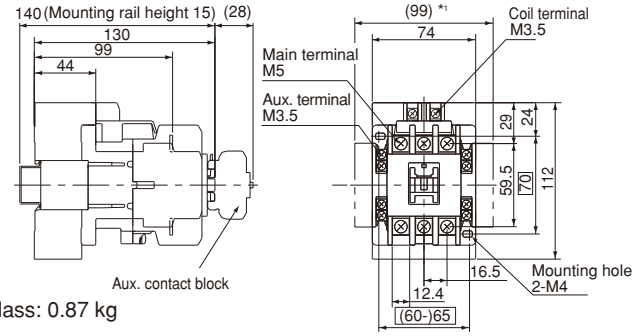

Mass: 0.87 kg

SC-N4/SE, SC-N5

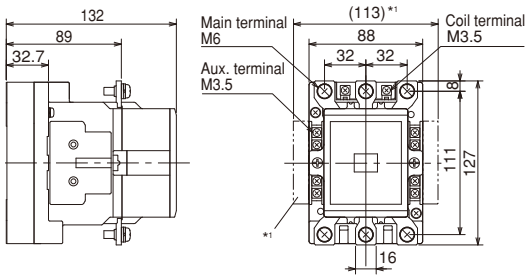

Mass: 1.8 kg

SC-N2S/SE, SC-N3/SE

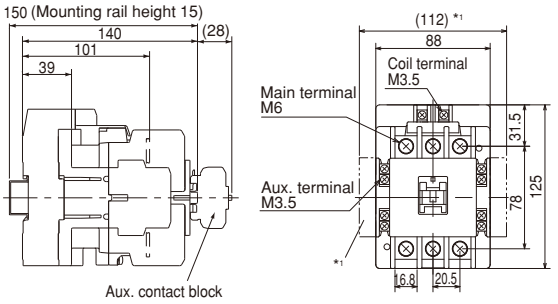

Mass: 1.3 kg

■ Wiring diagrams
SC-N1/SE to SC-N4/SE

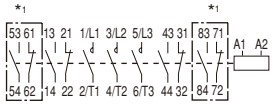

*1 In case of auxiliary contact 4NO+4NC

Dimension for SC-N5 to SC-N16 types

Same as standard open type

See page A1-27, A1-28

DC operated starters

SW-N1/SE3H, SW-N2/SE3H

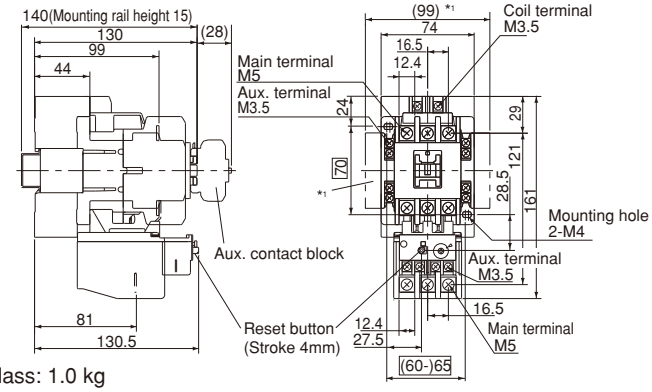

Mass: 1.0 kg

SW-N4/SE3H, SW-N5/3H

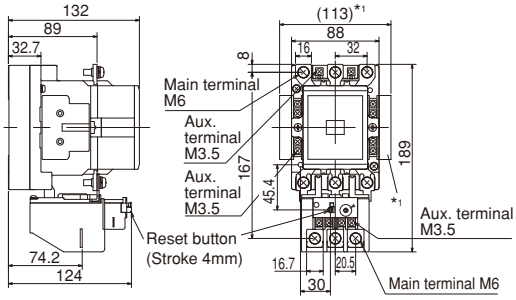

*1 In case of auxiliary contact 4NO+4NC

Mass: 2.1 kg

SW-N2S/SE3H, SW-N3/SE3H

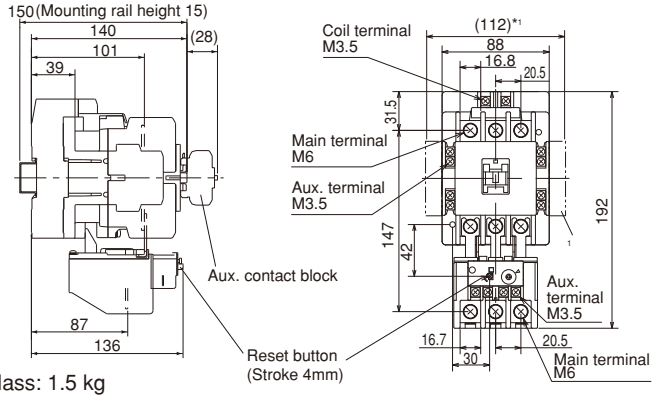

Mass: 1.5 kg

■ Wiring diagrams
SW-N1/SE3H to SW-N5/3H

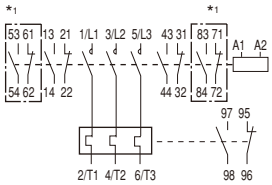

*1 In case of auxiliary contact 4NO+4NC

Dimension for SW-N6/3H to SW-N14/3H types

Same as standard open type

See page A1-31, A1-32

Note: *1 For two side mounting aux. contact blocks mounted

Magnetic Contactors and Starters
SC and SW series OFF-delay release

OFF-delay release type

■ Description

This type contactor consists of DC-operated contactor and off-delay release unit, and the contacts are released with a delay of 1-4 or 1-5 seconds after the coil has been de-energized.
When the standard type contactor suffers an instantaneous voltage drop in the AC power supply or a power failure takes place the operating coils are de-energized and the reclosing of the contacts must be carried out every time. The off-delay release contactor is so designed that in the event of a brief power outage the coil will not release the contacts and the power is maintained making reclosing action unnecessary.

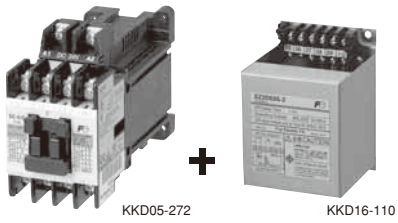

SC-0/G SZ1DE20

■ Combination of OFF-delay release units and contactors

Contactor Type	Ordering code	Starter (3-element) Type	Ordering code	OFF-delay release unit Type	Ordering code
SC-03/G	SC11AG-■10	SW-03/G3H	SC11AGN-■10T□D	**SZ1DE20-1**	SZ1DE20-1
SC-0/G	SC13AG-■10	SW-0/G3H	SC13AGN-■10T□D	**SZ1DE20-H**	SZ1DE20-H
SC-05/G	SC14AG-■11	SW-05/G3H	SC14AGN-■11T□D	**SZ1DE20-2**	SZ1DE20-2
SC-4-0/G	SC18AG-■10	SW-4-0/G3H	SC18AGN-■10T□D	**SZ1DE20-M**	SZ1DE20-M
SC-4-1/G	SC19AG-■10	SW-4-1/G3H	SC19AGN-■10T□D		
SC-5-1/G	SC20AG-■11	SW-5-1/G3H	SC20AGN-■11T□D		
SC-N1/G	SC25BAG-■22	SW-N1/G3H	SC25BAGN-■22T□D	**SZ2DE35-1**	SZ2DE35-1
SC-N2/G	SC35BAG-■22	SW-N2/G3H	SC35BAGN-■22T□D	**SZ2DE35-2**	SZ2DE35-2
SC-N2S/G	SC50BAG-■22	SW-N2S/G3H	SC50BAGN-■22T□D	**SZ2DE65-1**	SZ2DE65-1
SC-N3/G	SC65BAG-■22	SW-N3/G3H	SC65BAGN-■22T□D	**SZ2DE65-2**	SZ2DE65-2
SC-N4/SE	SC80BAS-■22	SW-N4/SE3H	SC80BASN-■22T□D	**SZ-N5/DE**	SZ2N5DE-□
SC-N5	SC93BAA-■22	SW-N5/3H	SC93BAAN-■22T□D	**SZ-N5/DE**	SZ2N5DE-□
SC-N6	SC1CBAA-■22	SW-N6/3H	SC1CBAAN-■22T□D	**SZ-N6/DE**	SZ2N6DE-□
SC-N7	SC1FBAA-■22	SW-N7/3H	SC1FBAAN-■22T□D	**SZ-N6/DE**	SZ2N6DE-□
SC-N8	SC1JBAA-■22	SW-N8/3H	SC1JBAAN-■22T□D	**SZ-N8/DE**	SZ2N8DE-□
SC-N10	SC2CBAA-■22	SW-N10/3H	SC2CBAAN-■22T□D	**SZ-N8/DE**	SZ2N8DE-□
SC-N11	SC3ABAA-■22	SW-N11/3H	SC3ABAAN-■22T□D	**SZ-N11/DE**	SZ2N11DE-□
SC-N12	SC4ABAA-■22	SW-N12/3H	SC4ABAAN-■22T□D	**SZ-N11/DE**	SZ2N11DE-□
SC-N14	SC6ABAA-■22	SW-N14/3H	SC6ABAAN-■22T□D	**SZ-N14/DE**	SZ2N14DE-□

Notes: 1. For contactor and starter.
Enter the coil voltage code in the ■ mark.
Enter the thermal overload relay ampere setting range code in the □ mark.
2. For off-delay release unit.
Enter the control voltage code in the □ mark.

● OFF-delay release unit ordering code

SZ 1DE20 – □

Basic type
Frame size
Control voltage
For SZ1DE20, SZ2DE35, SZ2DE65
1: 100V AC, 50/60Hz 2: 200V AC, 50/60Hz
H: 110V AC, 50/60Hz M: 220V AC, 50/60Hz
For SZ-N5/DE to N14/DE
1: 100-110V AC, 50/60Hz
2: 200-220V AC, 50/60Hz

Note: If OFF-delay release contactors (starters) having capacities of frame size 03 to N3 are required the DC operated contactors (starters) will be combined with the OFF-delay release unit.
When ordering make sure that the input voltage (AC) of the OFF-delay release unit is equal to the operating voltage (DC) of the contactors (starters).
Example:
SZ-N5/DE 100V AC 50Hz+SC-N5 100V DC
(OFF-delay release unit) + (Contactor)

■ Performance data

Frame	Hold time	Making/breaking capacity	Operating cycles per hour	Life expectancy (operations) Electrical	Mechanical
03/G to 5-1/G	1–5 sec.	10×Ie / 8×Ie	600	2 million*1	10 million
N1/G, N2/G	1–5 sec.	10×Ie / 8×Ie	600	2 million	10 million
N2S/G, N3/G	1–5 sec.	10×Ie / 8×Ie	600	2 million	5 million
N4/SE	1–4 sec.	10×Ie / 8×Ie	600	1 million	5 million
N5 to N11	1–4 sec.	10×Ie / 8×Ie	600	1 million	5 million
N12	1–4 sec.	10×Ie / 8×Ie	600	500,000	5 million
N14	1–4 sec.	10×Ie / 8×Ie	600	500,000	5 million

Ie: Rated operational current
Capacitor life: 100,000 operations
*1 Frame size 4–0: 1.5 million
Conforming to Class AC-3, IEC 60947-4-1

OFF-delay release unit Wiring diagrams

SZ1DE20-□
SZ2DE35-□
SZ2DE65-□

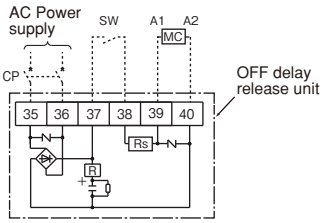

SZ-N5/DE to N14/DE

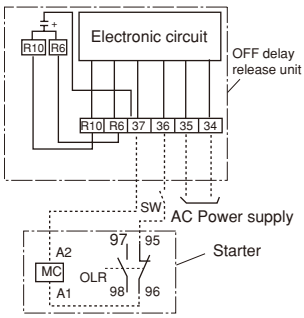

■ Dimensions, mm

SZ1DE20-□
SZ2DE35-□
SZ2DE65-□

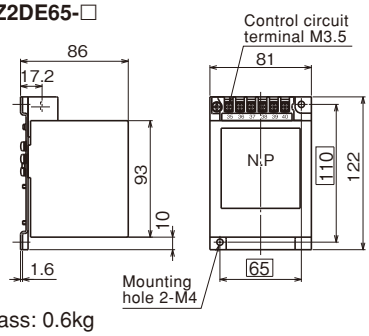

Mass: 0.6kg

SZ-N5/DE to N14/DE

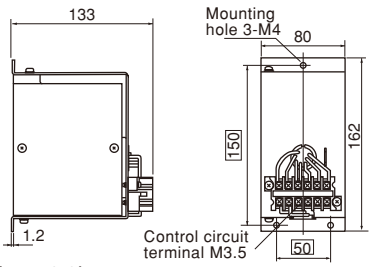

Mass: 0.8kg

Magnetic Contactors and Starters
SC and SW series With extra pick-up operating coil

Contactors and starters with extra pick-up operating coil

■ Description

Generally, if the operating coil voltage of the contactor is within 85%–110% of its rated value normal operation can be expected. However, should the power source have a low capacity or if the supply point is some distance away from the power source a voltage drop can be expected and voltage may fall below 85% of its rated value under motor starting or similar conditions. Direct-on-line starting under these circumstances may result in poor starter performance, contacts welding together and coils overheating. The FUJI U-type contactors are provided with an extra operating coil which performs correctly even if the voltage is only 75% of its rated value. This starter is recommended for use in locations where reduced voltage conditions are met.
Standard types for frame sizes N5 and above can be used as the contactor or starter with extra pick-up operating coil.
Enclosed type starters (03 to N4) are also available.

■ Ratings: *See page A1-20.*

■ Coil voltage: *See page A1-22.*

■ Dimensions:

Same as standard type.
See page A1-26, A1-27.

■ Thermal overload relay:

See page A1-87.

■ Ordering information

Specify the following:
1. Ordering code
2. Motor ratings: Voltage, frequency, capacity (kW) and full load current.
3. Operating coil voltage code

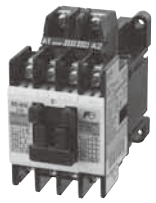

KKD11-016

SC-0/U

■ Coil characteristics

Contactor Type	Ordering code	Starter (3-element) Type	Ordering code	Aux. contact NO	NC	Power consumption Inrush (VA)	Sealed (VA)	Pick-up voltage (V) 200V 50Hz	220V 60Hz	Drop-out voltage (V) 200V 50Hz	220V 60Hz
SC-03/U	SC11AU-■10	**SW-03/U3H**	SC11AUN-■10T□D	1	– *1	120	15	93–115	102–124	58–88	66–96
SC-0/U	SC13AU-■10	**SW-0/U3H**	SC13AUN-■10T□D	1	– *1	120	15	93–115	102–124	58–88	66–96
SC-05/U	SC14AU-■11	**SW-05/U3H**	SC14AUN-■11T□D	1	1 *2	120	15	93–116	103–126	60–90	70–99
SC-4-0/U	SC18AU-■10	**SW-4-0/U3H**	SC18AUN-■10T□D	1	– *1	120	15	100–120	110–130	63–90	73–100
SC-4-1/U	SC19AU-■10	**SW-4-1/U3H**	SC19AUN-■10T□D	1	– *1	120	15	100–120	110–130	63–90	73–100
SC-5-1/U	SC20AU-■11	**SW-5-1/U3H**	SC20AUN-■11T□D	1	1 *2	120	15	99–121	110–130	64–96	74–102
SC-5-1/U	SC20AU-■22	**SW-5-1/U3H**	SC20AUN-■22T□D	2	2	120	15	99–121	110–130	64–96	74–102
SC-N1/U	SC25BAU-■22	**SW-N1/U3H**	SC25BAUN-■22T□D	2	2 *3	130	13	104–122	114–132	68–88	80–98
SC-N2/U	SC35BAU-■22	**SW-N2/U3H**	SC35BAUN-■22T□D	2	2 *3	130	13	104–122	114–132	68–88	80–98
SC-N2S/U	SC50BAU-■22	**SW-N2S/U3H**	SC50BAUN-■22T□D	2	2 *3	195	14.3	104–120	118–134	72–90	84–102
SC-N3/U	SC65BAU-■22	**SW-N3/U3H**	SC65BAUN-■22T□D	2	2 *3	195	14.3	104–120	118–134	72–90	84–102
SC-N4/U	SC80BAU-■22	**SW-N4/U3H**	SC80BAUN-■22T□D	2	2 *3	235	20	104–120	118–134	72–90	84–102

Notes: 1 The standard SC-N5 to SC-N16 types are provided with the SUPER MAGNET which holds without chattering even if the line voltage drops to 65% of its rated value, so preventing the troubles such as contact welding or coil burning.
2. *1 Auxiliary contact 1NC is available on request.
*2 Auxiliary contact 2NO or 2NC is available on request.
*3 Auxiliary contact 4NO+4NC is available on request
3. Enter the coil voltage code in the ■ mark.
Enter the thermal overload relay ampere setting range code in the □ mark.

■ Performance data

Type Contactor	Starter	Make and break capacity	Operating cycles per hour	Life expectancy (operations) Electrical	Mechanical
SC-03/U	**SW-03/U3H**	IEC60947-4-1 class AC-3	1800	2 million	2.5 million
SC-0/U	**SW-0/U3H**	Make: 10×Ie	1800	2 million	2.5 million
SC-05/U	**SW-05/U3H**	Break: 8×Ie	1800	2 million	2.5 million
SC-4-0/U	**SW-4-0/U3H**	(Ie : Operational current)	1800	2 million	2.5 million
SC-4-1/U	**SW-4-1/U3H**		1800	2 million	2.5 million
SC-5-1/U	**SW-5-1/U3H**		1800	2 million	2.5 million
SC-N1/U	**SW-N1/U3H**		1200	2 million	2.5 million
SC-N2/U	**SW-N2/U3H**		1200	1 million	1 million
SC-N2S/U	**SW-N2S/U3H**		1200	1 million	1 million
SC-N3/U	**SW-N3/U3H**		1200	1 million	1 million
SC-N4/U	**SW-N4/U3H**		1200	1 million	1 million

Magnetic Contactors and Starters
SC series Mechanical latch contacts

Mechanical latch contactors

Up to 315kW 440 Volts AC 3-phase

■ Description

Mechanical latch contactors are used where operating sequence continuity must be maintained regardless of any outside interruptions, such as voltage failure or instantaneous voltage drop. Typical applications are for electric furnaces, machine tool circuits, standby power supply and normal power changeover circuits in hospitals, schools and office buildings.
These contactors are provided with two coils. One is CC (Closing Coil) and the other is TC (Tripping Coil).
An interlocking circuit is provided between the CC coil and the TC coil.
Since a coil voltage is not applied during operation it is extremely quiet. Power consumption can also be saved.

AF88-801

SC-0/V

F88-1356

SC-5-1RM/V

■ Performance data

Frame size	Making capacity	Breaking capacity	Operating cycles per hour	Life expectancy (operations) Electrical	Mechanical
03/V to 5-1/V, 03/VG to 5-1/VG	10×Ie	8×Ie	1200	500,000	1 million
N1/VS to N3/VS	10×Ie	8×Ie	600	500,000	500,000
N4/VS to N12/VS	10×Ie	8×Ie	600	250,000	250,000
N14/VS	10×Ie	8×Ie	600	100,000	100,000

Notes: Ie: Rated operational current.
- Mechanical latch units cannot be sold separately. Such units are only sold attached to contactors.
- Do not detach mechanical latch units from contactors and do not make modifications such as attaching mechanical latch units to other contactors.

■ Types and ratings

• AC, AC/DC operated

Max. motor capacity (kW) 200V 240V	380V 440V	Rated operational current (A) 200V 240V	380V 440V	Rated thermal current Ith (A)	Non-reversing Type	Aux. contact NO	NC	Ordering code	Reversing Type	Aux. contact NO	NC	Ordering code
2.5	4	11	9	20	**SC-03/V**	–	–	SC11AV-■00	**SC-03RM/V**	–	–	SC11RV-■00
3.5	5.5	13	12	20	**SC-0/V**	–	–	SC13AV-■00	**SC-0RM/V**	–	–	SC13RV-■00
3.5	5.5	13	12	20	**SC-05/V**	1	–	SC14AV-■10	**SC-05RM/V**	2	–	SC14RV-■10
3.5	5.5	13	12	20		–	1	SC14AV-■01		–	2	SC14RV-■01
4.5	7.5	18	16	25	**SC-4-0/V**	–	–	SC18AV-■00	**SC-4-0RM/V**	–	–	SC18RV-■00
5.5	11	22	22	32	**SC-4-1/V**	–	–	SC19AV-■00	**SC-4-1RM/V**	–	–	SC19RV-■00
5.5	11	22	22	32	**SC-5-1/V**	1	–	SC20AV-■10	**SC-5-1RM/V**	2	–	SC20RV-■10
5.5	11	22	22	32		–	1	SC20AV-■01		–	2	SC20RV-■01
5.5	11	22	22	32		1	2	SC20AV-■12		2	4	SC20RV-■12
7.5	15	32	32	50	**SC-N1/VS**	2	2	SC25BAE-■22	**SC-N1RM/VS**	4	4	SC25BRE-■22
11	18.5	40	40	60	**SC-N2/VS**	2	2	SC35BAE-■22	**SC-N2RM/VS**	4	4	SC35BRE-■22
15	22	50	50	80	**SC-N2S/VS**	2	2	SC50BAE-■22	**SC-N2SRM/VS**	4	4	SC50BRE-■22
18.5	30	65	65	100	**SC-N3/VS**	2	2	SC65BAE-■22	**SC-N3RM/VS**	4	4	SC65BRE-■22
22	40	80	80	135	**SC-N4/VS**	1	2	SC80BAE-■12	**SC-N4RM/VS**	2	4	SC80BRE-■12
30	55	105	105	150	**SC-N5/VS**	1	2	SC93BAE-■12	**SC-N5RM/VS**	2	4	SC93BRE-■12
37	60	125	125	150	**SC-N6/VS**	1	2	SC1CBAE-■12	**SC-N6RM/VS**	2	4	SC1CBRE-■12
45	75	150	150	200	**SC-N7/VS**	1	2	SC1FBAE-■12	**SC-N7RM/VS**	2	4	SC1FBRE-■12
55	90	180	180	260	**SC-N8/VS**	1	2	SC1JBAE-■12	**SC-N8RM/VS**	2	4	SC1JBRE-■12
65	110	220	220	260	**SC-N10/VS**	1	2	SC2CBAE-■12	**SC-N10RM/VS**	2	4	SC2CBRE-■12
90	160	300	300	350	**SC-N11/VS**	1	2	SC3ABAE-■12	**SC-N11RM/VS**	2	4	SC3ABRE-■12
120	220	400	400	450	**SC-N12/VS**	1	2	SC4ABAE-■12	**SC-N12RM/VS**	2	4	SC4ABRE-■12
180	315	600	600	660	**SC-N14/VS**	1	2	SC6ABAE-■12	**SC-N14RM/VS**	2	4	SC6ABRE-■12

Notes: Since SC-N1/VS to SC-N14/VS are provided with the SUPER MAGNET they operate on both AC or DC.
Enter the coil rated voltage code in the ■ mark, *see page A1-19*

• DC operated

Max. motor capacity (kW) 200V 240V	380V 440V	Rated operational current (A) 200V 240V	380V 440V	Rated thermal current Ith (A)	Non-reversing Type	Aux. contact NO	NC	Ordering code	Reversing Type	Aux. contact NO	NC	Ordering code
2.5	4	11	9	20	**SC-03/VG**	–	–	SC11AD-■00	**SC-03RM/VG**	–	–	SC11RD-■00
3.5	5.5	13	12	20	**SC-0/VG**	–	–	SC13AD-■00	**SC-0RM/VG**	–	–	SC13RD-■00
3.5	5.5	13	12	20	**SC-05/VG**	1	–	SC14AD-■10	**SC-05RM/VG**	2	2	SC14RD-■10
3.5	5.5	13	12	20		–	1	SC14AD-■01		–	–	SC14RD-■01
4.5	7.5	18	16	25	**SC-4-0/VG**	–	–	SC18AD-■00	**SC-4-0RM/VG**	–	–	SC18RD-■00
5.5	11	22	22	32	**SC-4-1/VG**	–	–	SC19AD-■00	**SC-4-1RM/VG**	–	–	SC19RD-■00
5.5	11	22	22	32	**SC-5-1/VG**	1	–	SC20AD-■10	**SC-5-1RM/VG**	2	2	SC20RD-■10
5.5	11	22	22	32		–	1	SC20AD-■01		–	–	SC20RD-■01
5.5	11	22	22	32		1	2	SC20AD-■12		2	2	SC20RD-■12

Note: Enter the coil rated voltage code in the ■ mark, *see page A1-19*

Magnetic Contactors and Starters
SC series Mechanical latch contacts

■ Operating method

Closing

When the closing coil is energized the latch mechanism interlocks to latch and the NC contact connected in series with the closing coil opens and the coil is de-energized.

Tripping

When the tripping coil is energized the latch is released and tripping is carried out by means of the back spring. At this time the NO contact connected in series with the tripping coil opens.

■ Operating notes

- When carrying out a sequence operating check make sure that the load circuit is open.
- The electrical signal time for closing and tripping should be 0.3 sec. or more.
- Tripping coil is short time rated.
  Tripping coil: Max. 15 seconds
- In the cases of 03/V to N3/VS versions the contacts cannot be replaced. In the cases of those versions above N4/VS the contacts can be replaced.
- Both closing and tripping circuits should be electrically interlocked with each other.

■ Ordering information

Specify the following:

1. Ordering code
2. Auxiliary contact arrangement:
   In the case of the frame size 05/V, 05/VG, 5-1/V or 5-1/VG, specify the contact arrangement.
3. Closing and tripping coil
   For AC operated: Voltage and frequency
   For DC operated: Voltage

■ Coil characteristics

AC operated

Type	Power consumption Closing (VA)	Tripping (VA)	Coil voltage *
SC-03/V	95	150	100/100–110V AC 50/60Hz
SC-0/V	95	150	
SC-05/V	95	150	
SC-4-0/V	95	150	200/200–220V AC 50/60Hz
SC-4-1/V	95	150	
SC-5-1/V	95	150	
SC-N1/VS	100	140	100–110V AC 50/60Hz
SC-N2/VS	100	140	
SC-N2S/VS	115	140	
SC-N3/VS	115	140	200/220V AC 50/60Hz
SC-N4/VS	161	266	
SC-N5/VS	161	266	
SC-N6/VS	229	266	
SC-N7/VS	229	266	
SC-N8/VS	273	385	
SC-N10/VS	273	385	
SC-N11/VS	490	385	
SC-N12/VS	490	385	
SC-N14/VS	500	660	

Notes: *Other coil voltage can be supplied.
SC-03/V to 5-1/V: 24 to 220V AC 50/60Hz
SC-N1/VS to N12/VS: 24 to 220V AC 50/60Hz
SC-N14/VS: 100 to 220V AC 50/60Hz

DC operated

Type	Power consumption Closing (W)	Tripping (W)	Coil voltage *
SC-03/VG	7	150	100, 110V DC
SC-0/VG	7	150	
SC-05/VG	7	150	200, 220V DC
SC-4-0/VG	7	150	
SC-4-1/VG	7	150	
SC-5-1/VG	7	150	
SC-N1/VS	95	150	100–110V DC
SC-N2/VS	95	150	
SC-N2S/VS	110	150	200–220V DC
SC-N3/VS	110	150	
SC-N4/VS	153	198	
SC-N5/VS	153	198	
SC-N6/VS	216	198	
SC-N7/VS	216	198	
SC-N8/VS	260	294	
SC-N10/VS	260	294	
SC-N11/VS	515	294	
SC-N12/VS	515	294	
SC-N14/VS	500	660	

Notes: *Other coil voltage can be supplied.
SC-03/VG to 5-1/VG: 24 to 220V DC
SC-N1/VS to N12/VS: 24 to 220V DC
SC-N14/VS: 100 to 220V DC

■ Operating circuit

SC-03/V to 5-1/V
SC-03/VG to 5-1/VG

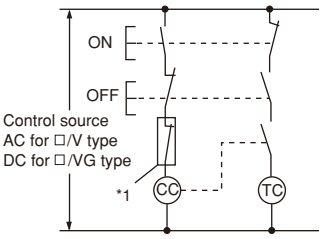

*1 NC contact for closing coil to be de-energized

SC-N1/VS to N3/VS

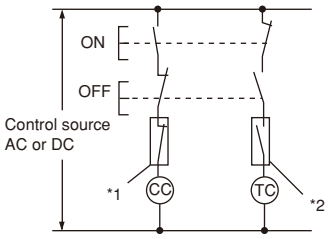

*1 NC contact for closing coil to be de-energized.
*2 NO contact for tripping coil to be de-energized.

SC-N4/VS to N14/VS

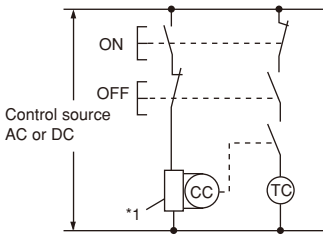

*1 Solid-state circuit for closing coil to be controlled.
(NC solid-state contact)

Magnetic Contactors and Starters
SC series Mechanical latch contacts

Mechanical latch type contactors

■ Dimensions, mm

SC-03/V to 5-1/V
SC-03/VG to 5-1/VG

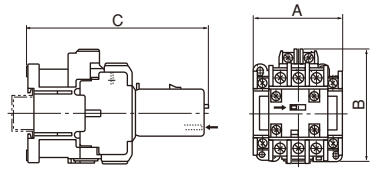

SC-N4/VS to N7/VS

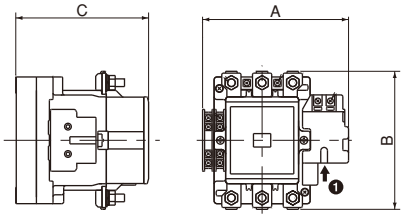

SC-N14/VS

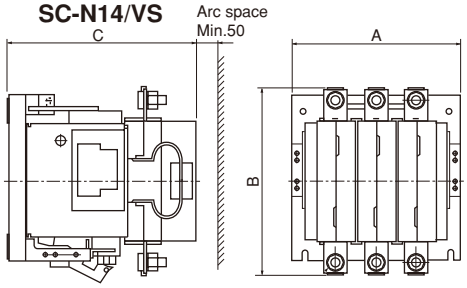

SC-N1/VS to N3/VS

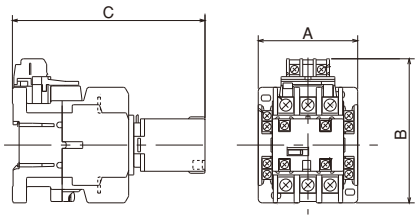

SC-N8/VS to N12/VS

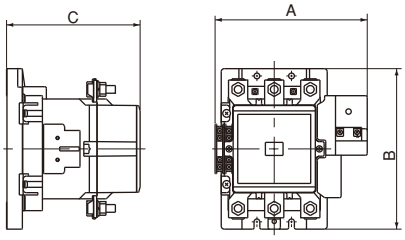

Dimensions for reference only.
Confirm before construction begins.

Type	A	B	C	Mass (kg)
SC-03/V, 0/V	43	81	128	0.43
SC-05/V	53	81	128	0.45
SC-4-0/V, 4-1/V	53	81	129	0.47
SC-5-1/V	64	81	129	0.49
SC-03/VG, 0/VG	43	81	155	0.66
SC-05/VG	53	81	155	0.69
SC-4-0/VG, 4-1/VG	53	81	156	0.71
SC-5-1/VG	64	81	156	0.73

Type	A	B	C	Mass (kg)
SC-N1/VS, N2/VS	74	108	143.5	0.75
SC-N2S/VS, N3/VS	88	130	158	1.25
SC-N4/VS,N5/VS	140	127	132	2.3
SC-N6/VS	152	144	138	2.9
SC-N7/VS	167.5	156	140	3.2
SC-N8/VS, N10/VS	199	209	177	5.7
SC-N11/VS, N12/VS	215.5	240	198	8.6
SC-N14/VS	290	332	325	37

■ Wiring diagrams

SC-03/V, 0/V, 4-0/V, 4-1/V
SC-03/VG, 0/VG, 4-0/VG, 4-1/VG

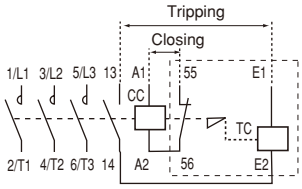

SC-05/V, 5-1/V SC-05/VG, 5-1/VG
(Aux. contact 1NO)

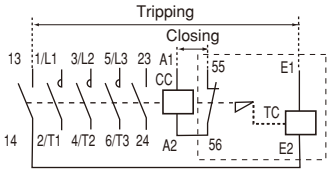

(Aux. contact 1NC)

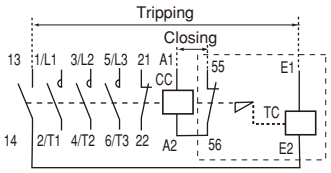

SC-5-1/V, /VG (Aux. contact 1NO+2NC)

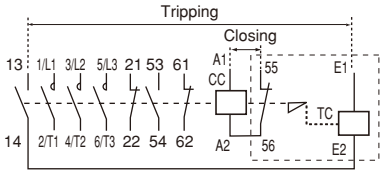

SC-N1/VS to N3/VS

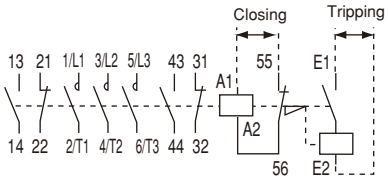

SC-N4/VS to N12/VS

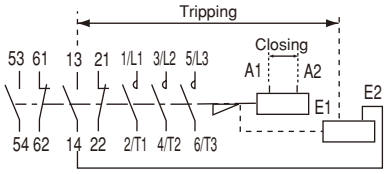

SC-N14/VS

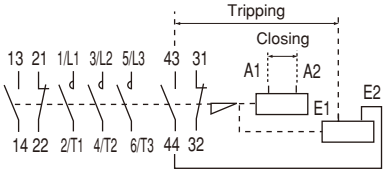

CC: Closing coil
TC: Tripping coil

Reversing mechanical latch contactors

■ Dimensions, mm

SC-03RM/V to 5-1RM/V
SC-03RM/VG to 5-1RM/VG

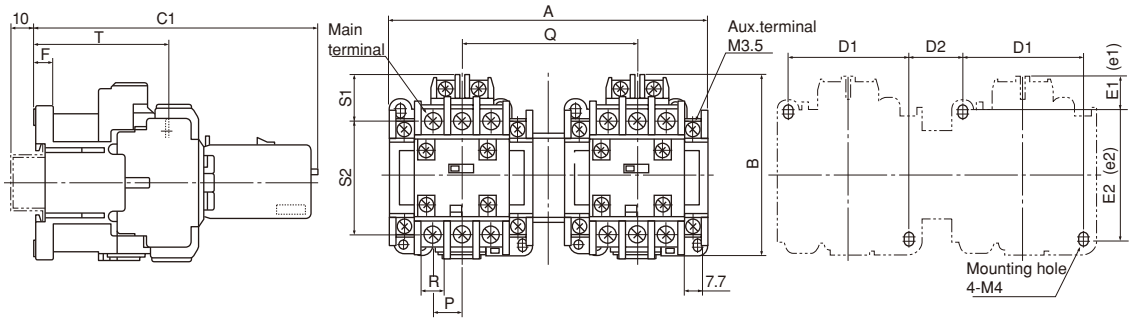

Type	Auxiliary contact	A	B	C1	D1	D2	E1(e_1)	E2(e_2)	F	P	Q	R	S1	S2	T	Main terminal	Mass (kg)
SC-03RM/V	–	99	81	128	34	22	18.5 (20.5)	52 (48)	8.5	10	56	7.7	23	43	61	M3.5	0.9
SC-0RM/V	–	99	81	128	34	22	18.5 (20.5)	52 (48)	8.5	10	56	7.7	23	43	61	M3.5	0.9
SC-05RM/V	2NO or 2NC	119	81	128	34	32	18.5 (20.5)	52 (48)	8.5	10	66	7.7	23	43	61	M3.5	0.94
SC-4-0RM/V	–	119	81	129	34	32	18.5 (20.5)	52 (48)	8.5	13	66	9.7	20	49	61	M4	0.98
SC-4-1RM/V	–	119	81	129	34	32	18.5 (20.5)	52 (48)	8.5	13	66	9.7	20	49	61	M4	0.98
SC-5-1RM/V	2NO or 2NC	141	81	129	54	23	14.5 (16.5)	60 (56)	8.5	13	77	9.7	20	49	61	M4	1.02
	2NO+4NC	165	81	129	54	23	14.5 (16.5)	60 (56)	8.5	13	77	9.7	20	49	61	M4	1.08
SC-03RM/VG	–	99	81	155	34	22	18.5 (20.5)	52 (48)	8.5	10	56	7.7	23	43	88	M3.5	1.36
SC-0RM/VG	–	99	81	155	34	22	18.5 (20.5)	52 (48)	8.5	10	56	7.7	23	43	88	M3.5	1.36
SC-05RM/VG	2NO or 2NC	119	81	155	34	32	18.5 (20.5)	52 (48)	8.5	10	66	7.7	23	43	88	M3.5	1.42
SC-4-0RM/VG	–	119	81	156	34	32	18.5 (20.5)	52 (48)	8.5	13	66	9.7	20	49	88	M4	1.46
SC-4-1RM/VG	–	119	81	156	34	32	18.5 (20.5)	52 (48)	8.5	13	66	9.7	20	49	88	M4	1.46
SC-5-1RM/VG	2NO or 2NC	141	81	156	54	23	14.5 (16.5)	60 (56)	8.5	13	77	9.7	20	49	88	M4	1.5
	2NO+4NC	165	81	156	54	23	14.5 (16.5)	60 (56)	8.5	13	77	9.7	20	49	88	M4	1.56

Fig. 1 SC-N1RM/VS to N3RM/VS

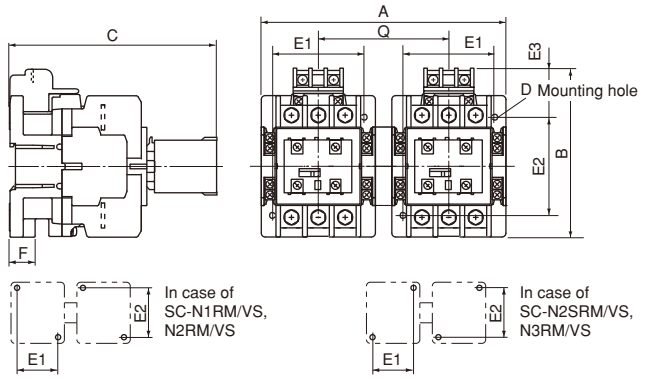

Fig. 2 SC-N4RM/VS to N12RM/VS

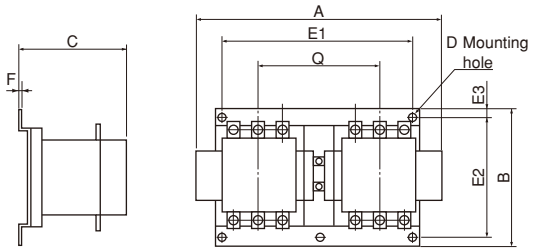

Fig. 3 SC-N14RM/VS

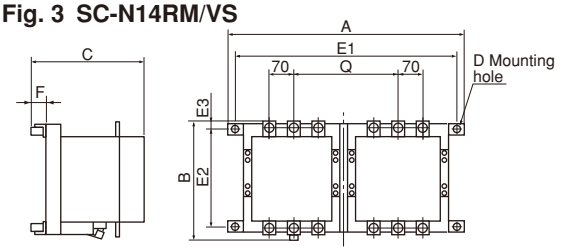

Type	A	B	C	D	E1	E2	E3	F	Q	Mass (kg)	Fig. No.
SC-N1RM/VS	161	108	143.5	4-M4	65	70	30	10.5	87	1.6	1
SC-N2RM/VS	161	108	143.5	4-M4	65	70	30	10.5	87	1.6	1
SC-N2SRM/VS	187	130	158	4-M4	70	75	38	10.5	100	2.6	1
SC-N3RM/VS	187	130	158	4-M4	70	75	38	10.5	100	2.6	1
SC-N4RM/VS	303	165	138.5	3-M5	200	150	7.5	1.6	135	5.0	2
SC-N5RM/VS	303	165	138.5	3-M5	200	150	7.5	1.6	135	5.0	2
SC-N6RM/VS	327	190	145	3-M5	220	175	7.5	1.6	147	6.7	2
SC-N7RM/VS	358	215	147	3-M6	260	200	7.5	2	162	8.1	2
SC-N8RM/VS	421	270	187	4-M6	300	250	10	2	177	13.0	2
SC-N10RM/VS	421	270	187	4-M6	300	250	10	2	177	13.0	2
SC-N11RM/VS	454	330	213	4-M8	300	300	15	2.3	192	21.4	2
SC-N12RM/VS	454	330	213	4-M8	300	300	15	2.3	192	21.4	2
SC-N14RM/VS	700	349	370	4-M10	650	250	41	45	324	80	3

Dimensions for reference only.
Confirm before construction begins.

A1

Reversing mechanical latch contactors

■ Wiring diagrams

SC-03RM/V, 0RM/V, 4-0RM/V, 4-1RM/V
SC-03RM/VG, 0RM/VG, 4-0RM/VG, 4-1RM/VG

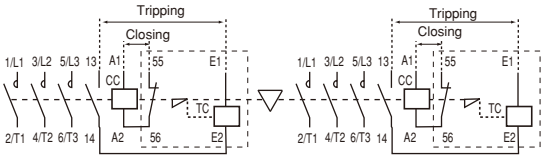

CC: Closing coil
TC: Tripping coil

SC-05RM/V, 5-1RM/V
SC-05RM/VG, 5-1RM/VG
Auxiliary contact: 1NO×2

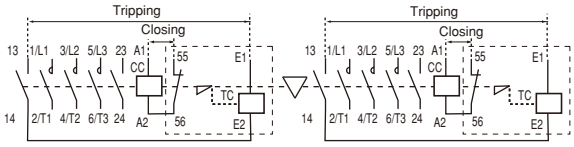

CC: Closing coil
TC: Tripping coil

SC-05RM/V, 5-1RM/V
SC-05RM/VG, 5-1RM/VG
Auxiliary contact: 1NC×2

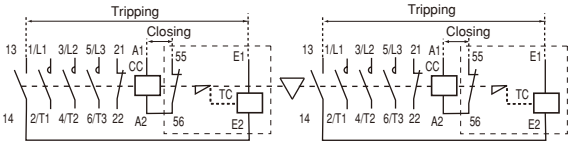

CC: Closing coil
TC: Tripping coil

SC-5-1RM/V
SC-5-1RM/VG
Auxiliary contact: 2×(1NO+2NC)

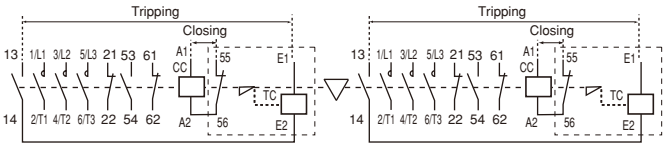

CC: Closing coil
TC: Tripping coil

SC-N1RM/VS to N3RM/VS

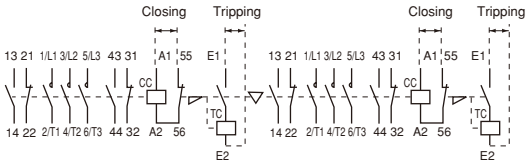

CC: Closing coil
TC: Tripping coil

SC-N4RM/VS to N12RM/VS

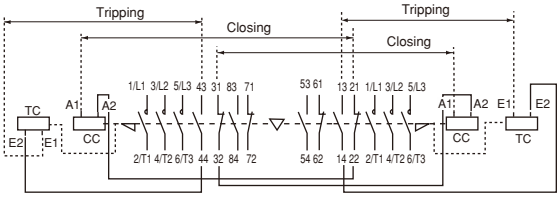

CC: Closing coil
TC: Tripping coil

SC-N14RM/VS

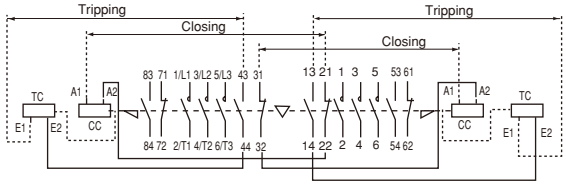

CC: Closing coil
TC: Tripping coil

Magnetic Contactors and Starters
SW series Heavy starting duty

Motor starters for heavy starting duty conditions

Up to 315kW 440 Volts 3-phase

■ Description

This starter is designed for applications to those loads where the inrush current at the moment of starting persists for a long period, such as with blowers, winders, fans and centrifugal separators whose inertia force is large. In these cases the inrush current could last up to 7-8 sec., and would cause a standard type starter to misstrip.
FUJI heavy load starters are highly suitable for such conditions and are provided with long time operating type thermal overload relays. In this type of overload relay the small-sized saturable core reactors are connected in parallel with the heater elements. These divert the inrush current at the time of starting.

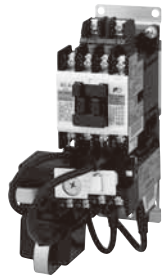

KKD09-115

SW-0/□L

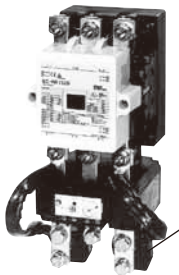

AF00-299

SW-N6/□L

■ Types and ratings

Type	Ordering code	Aux. contact NO	Aux. contact NC	Max. motor capacity (kW) 200V 240V	Max. motor capacity (kW) 380V 440V	Operational current (A) 200V 240V	Operational current (A) 380V 440V	Combined thermal over-load relay (3-element) Type
SW-03/3L	SC11AAF-■10T□	1	–	2.5	4	11	9	TR-0NL/3
SW-03/3L	SC11AAF-■01T□	–	1	2.5	4	11	9	TR-0NL/3
SW-0/3L	SC13AAF-■10T□	1	–	3.5	5.5	13	12	TR-0NL/3
SW-0/3L	SC13AAF-■01T□	–	1	3.5	5.5	13	12	TR-0NL/3
SW-05/3L	SC14AAF-■20T□	2	–	3.5	5.5	13	12	TR-0NL/3
SW-05/3L	SC14AAF-■11T□	1	1	3.5	5.5	13	12	TR-0NL/3
SW-05/3L	SC14AAF-■02T□	–	2	3.5	5.5	13	12	TR-0NL/3
SW-4-0/3L	SC18AAF-■10T□	1	–	4.5	7.5	18	16	TR-5-1NL/3
SW-4-0/3L	SC18AAF-■01T□	–	1	4.5	7.5	18	16	TR-5-1NL/3
SW-4-1/3L	SC19AAF-■10T□	1	–	5.5	11	22	22	TR-5-1NL/3
SW-4-1/3L	SC19AAF-■01T□	–	1	5.5	11	22	22	TR-5-1NL/3
SW-5-1/3L	SC20AAF-■20T□	2	–	5.5	11	22	22	TR-5-1NL/3
SW-5-1/3L	SC20AAF-■11T□	1	1	5.5	11	22	22	TR-5-1NL/3
SW-5-1/3L	SC20AAF-■02T□	–	2	5.5	11	22	22	TR-5-1NL/3
SW-5-1/3L	SC20AAF-■22T□	2	2	5.5	11	22	22	TR-5-1NL/3
SW-N1/3L	SC25BAAF-■22T□	2	2	7.5	15	32	32	TR-N2L/3
SW-N2/3L	SC35BAAF-■22T□	2	2	11	18.5	40	40	TR-N2L/3
SW-N2S/3L	SC50BAAF-■22T□	2	2	15	22	50	50	TR-N3L/3
SW-N3/3L	SC65BAAF-■22T□	2	2	18.5	30	65	65	TR-N3L/3
SW-N4/3L	SC80BAAF-■22T□	2	2	22	40	80	80	TR-N5L/3
SW-N5A/3L	SC93CAAF-■22T□	2	2	30	55	105	105	TR-N5L/3
SW-N6/3L	SC1CBAAF-■22T□	2	2	37	60	125	125	TR-N6L/3
SW-N7/3L	SC1FBAAF-■22T□	2	2	45	75	150	150	TR-N7L/3
SW-N8/3L	SC1JBAAF-■22T□	2	2	55	90	180	180	TR-N10L/3
SW-N10/3L	SC2CBAAF-■22T□	2	2	65	110	220	220	TR-N10L/3
SW-N11/3L	SC3ABAAF-■22T□	2	2	90	160	300	300	TR-N11L/3
SW-N12/3L	SC4ABAAF-■22T□	2	2	120	220	400	400	TR-N12L/3
SW-N14/3L	SC6ABAAF-■22T□	2	2	180	315	600	600	TR-N14L/3

Notes: 1. ■ Enter the operating coil voltage code.
2. □ Enter the thermal overload relay ampere setting range code.
3. Starters with 2-element overload relay are also available SW-□/2L.

■ Ordering information

Specify the following:
1. Ordering code
2. Overload relay setting range code
3. Operating coil voltage code
4. Auxiliary contact arrangement

■ Thermal overload relay:

See page A1-87.

■ Performance data:

Same as standard type
See page A1-22.

■ Ratings of coil and auxiliary contacts:

See pages A1-20, 22 and 23.

■ Wiring diagrams:

See page A1-29, 30 and 32.
Same as the standard types except thermal overload relays.

Magnetic Contactors and Starters
SW series Heavy starting duty

■ Dimensions, mm

SW-03/2L to 5-1/2L
SW-03/3L to 5-1/3L

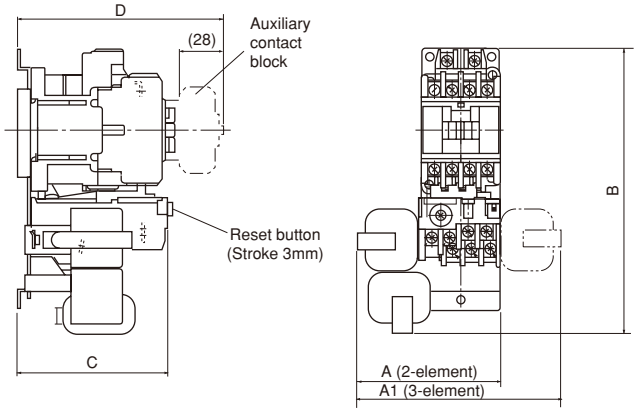

Type 2-element	3-element	A	A1	B	C	D *	Mass (kg) 2-element	3-element
SW-03/2L	**SW-03/3L**	79	115	157	83	113	0.62	0.72
SW-0/2L	**SW-0/3L**	79	115	157	83	113	0.62	0.72
SW-05/2L	**SW-05/3L**	84	120	157	84	114	0.64	0.74
SW-4-0/2L	**SW-4-0/3L**	88	124	157	83	114	0.66	0.76
SW-4-1/2L	**SW-4-1/3L**	88	124	157	83	114	0.66	0.76
SW-5-1/2L	**SW-5-1/3L**	89	124	157	83	114	0.69	0.79
SW-5-1/2L	**SW-5-1/3L**	89	124	157	83	114	0.71	0.81

C: Without front mounting auxiliary contact block
D: With front mounting auxiliary contact block
* Mounted auxiliary contacts 2NO+2NC

SW-N1/2L, N2/2L
SW-N1/3L, N2/3L

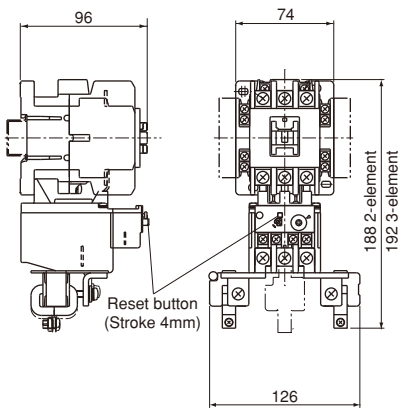

Mass: SW-N1/2L, N2/2L: 1.01kg
SW-N1/3L, N2/3L: 1.13kg

SW-N2S/2L to SW-N7/2L
SW-N2S/3L to SW-N7/3L

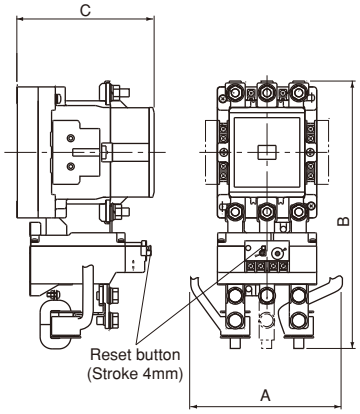

SW-N8/2L
SW-N8/3L

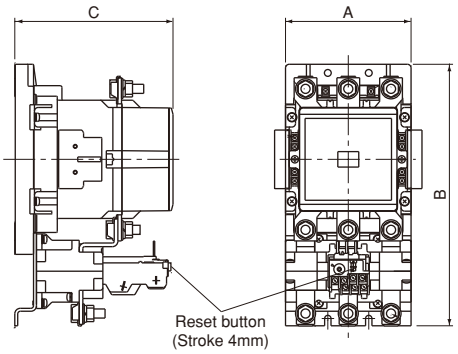

Note: SW-N10/2L, N11/2L, N12/2L and N14/2L, SW-N10/3L, N11/3L, N12/3L and N14/3L, have the same dimensions as SW-N10/3H, N11/3H, N12/3H and N14/3H, respectively.

Type 2-element	3-element	A	B 2-element	B 3-element	C	Mass (kg) 2-element	3-element
SW-N2S/2L	**SW-N2S/3L**	138	219	219	111	1.54	1.66
SW-N3/2L	**SW-N3/3L**	138(149)*	219(202)*	219(224)*	111	1.54	1.64
SW-N4/2L	**SW-N4/3L**	138(149)*	230(214)*	230(236)*	117	2.26	2.54
SW-N5A/2L	**SW-N5A/3L**	149	214	236	132	2.66	2.94
SW-N6/2L	**SW-N6/3L**	165	270	270	138	3.62	3.93
SW-N7/2L	**SW-N7/3L**	165	281	281	140	3.92	4.23
SW-N8/2L	**SW-N8/3L**	138	287	287	176	6.8	6.8

*( ) = In case of ampere setting range 45 to 65A

Dimensions for reference only. Confirm before construction begins.

Magnetic Contactors and Starters
SW series With quick operating overload relay

Motor starters with quick operating thermal overload relay

Up to 55kW 440 Volts 3-phase

■ Description

This motor starter is fitted with a quick operating type thermal overload relay which makes suitable for controlling submersible motor pumps and compressors. These motor windings are cooled by using liquid or other media.
Thus their overload capacity will be less than standard type motor. This also means that these motors cannot be protected by standard type overload relays since their operation would be rather slow. The starters are available in types ranging from SW-03/3Q to SW-N5/3Q. All thermal overload relays have 3-heater elements.

■ Features

- Thermal overload relays are designed to have similar starting characteristics to those of the motors. These relays will operate quicker than the standard type in the face of a locked rotor current. (Refer to the graph.)
- Compact with external dimensions similar to the standard type.
- The ampere setting dial of the overload relays is calibrated to an RC scale (Rated current). All that is necessary is to set a value equal to the full load current of the motor.

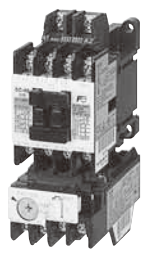

KK05-042

SW-0/3Q

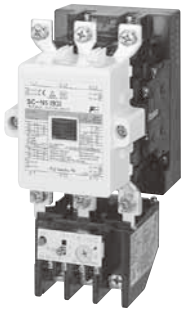

KK05-056

SW-N5/3Q

■ Operating characteristics

For explanation only

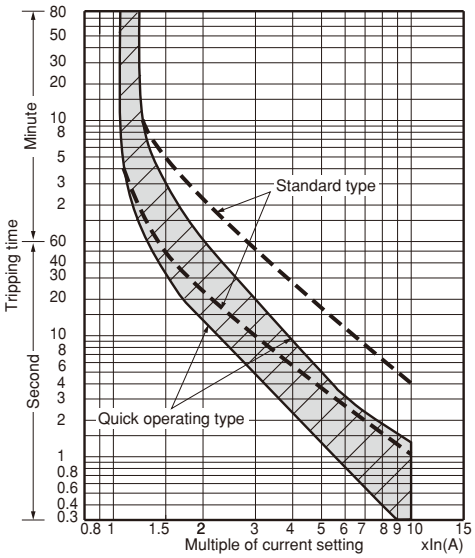

■ Ordering information

Specify the following:
1. Ordering code
2. Overload relay setting range code
3. Operating coil voltage code
4. Auxiliary contact arrangement

■ Performance data:

Same as standard types
See page A1-22.
Conforming to Class AC-3, IEC60947-4-1.

■ Ratings of coil and auxiliary contact:

See pages A1-20, 22 and 23.

■ Dimensions and wiring diagrams:

Same as standard types
See page A1-29, 30 and 31.

■ Thermal overload relay:

See page A1-87.

■ Ratings

Type	Ordering code	Max. motor capacity (kW) 200V 240V	Max. motor capacity (kW) 380V 440V	Rated operational current (A) 200V 240V	Rated operational current (A) 380V 440V	Auxiliary contact NO	Auxiliary contact NC	Combined thermal overload relay Type	Combined thermal overload relay Ordering code
SW-03/3Q	SC11AAS-■10T□	2.5	4	11	9	1	– *1	TR-0NQ	TR13SW-□
SW-0/3Q	SC13AAS-■10T□	3.5	5.5	13	12	1	– *1	TR-0NQ	TR13SW-□
SW-05/3Q	SC14AAS-■11T□	3.5	5.5	13	12	1	1 *2	TR-0NQ	TR13SW-□
SW-4-0/3Q	SC18AAS-■10T□	4.5	7.5	18	16	1	– *1	TR-5-1NQ	TR20SW-□
SW-4-1/3Q	SC19AAS-■10T□	4.5	7.5	18	16	1	– *1	TR-5-1NQ	TR20SW-□
SW-5-1/3Q	SC20AAS-■11T□	4.5	7.5	18	16	1	1 *3	TR-5-1NQ	TR20SW-□
SW-5-1/3Q	SC20AAS-■22T□	4.5	7.5	18	16	2	2	TR-5-1NQ	TR20SW-□
SW-N1/3Q	SC25BAAS-■22T□	7.5	15	32	32	2	2	TR-N2Q	TR35BSW-□
SW-N2/3Q	SC35BAAS-■22T□	11	18.5	40	40	2	2	TR-N2Q	TR35BSW-□
SW-N2S/3Q	SC50BAAS-■22T□	15	22	50	50	2	2	TR-N3Q	TR65BSW-□
SW-N3/3Q	SC65BAAS-■22T□	18.5	30	65	65	2	2	TR-N3Q	TR65BSW-□
SW-N4/3Q	SC80BAAS-■22T□	22	40	80	80	2	2	TR-N5Q	TR93BSW-□
SW-N5A/3Q	SC93CAAS-■22T□	30	55	105	105	2	2	TR-N5Q	TR93BSW-□

Notes: *1 Auxiliary contact 1NC is also available on request.
*2 Auxiliary contact 2NO or 2NC is also available on request.
*3 Auxiliary contact 2NO, 2NC or 2NO+2NC is also available on request.
Enter the coil voltage code in the ■ mark.
Enter the thermal overload relay ampere setting range code in the □ mark.

Magnetic Motor Starters
SW series With phase-loss protective device

Motor starters with phase-loss protective device

Up to 315 kW 440 Volts 3-phase

■ Description

These starters are provided with a FUJI TK type thermal overload relay. This has an phase-loss protection function as well as the ordinary overload protection.
These devices prevent damage due to single-phasing such as fuse melting, cable troubles or loosening through excessive vibration.
They are highly suitable for such applications as cooling fans or circulating pumps for power transformers.
The switches use FUJI SC series contactors which have a life expectancy of over 1 million operations and which makes them suitable for motor controls for industrial use.
Size range from 03 to N14 with capacities from 2.5kW to 180kW
220 Volts AC. Starters are available in both open- and enclosed-type versions.

Reversing motor starters with TK relays are also available.

■ Ordering information

Specify the following:
1. Ordering code
2. Overload relay setting range code
3. Operating coil voltage code
4. Auxiliary contact arrangement

■ Performance data:

Same as standard types.
See page A1-22.

■ Ratings of coil and auxiliary contacts:

See pages A1-20, 22 and 23.

■ Dimensions and wiring diagrams:

See pages A1-29, 30, 31 and 32.

■ Characteristics of TK relay:

See page A1-99.

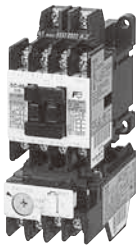

KK05-042

SW-0/2E

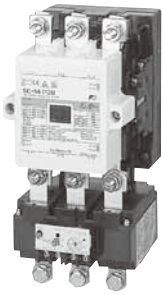

KK05-057

SW-N6/2E

■ Thermal overload relays with phase-loss protection

The TK thermal overload relay perfectly matches the heat characteristics of 3-phase squirrel-cage induction motors.
The heater element and phase-loss protective mechanism are built inside the enclosure.
The characteristics of the phase-loss mechanism co-ordinate with the temperature rise curve of the stator winding at the time of phase-loss.
When an phase-loss is produced during the full load operation of a 3-phase motor a current larger than the full load current will flow and operate the thermal overload relay. Under this load condition the standard type OL relay can provide adequate protection.
If the load is approx. 60% of the full load current the motor will continue a single phase running and the line current will become almost equal to the full load current.
However, since it will not reach the minimum operating point of OL relay the starter will not be tripped.
In the case of a delta winding motor a phase current of approx. 115% of the line full load current will flow in windings. This overcurrent results in a temperature rise in the motor windings and damage due to overheating can be expected.
FUJI TK thermal overload relays are provided with ADL mechanism which can correctly detect phase-loss under such medium load conditions. This sophisticated detecting mechanism can take corrective action quicker in the case of overload running.
The ADL mechanism operates on a dependable and simple level design.
It works as follows:—
The heater, in phase-loss, will be cool since no load current flows, while heater of other phases will heat up since a large current flows.
The difference in temperature between the cold and hot heater elements causes the shift lever to operate the Trip/Alarm contact.
The operating current range is 105%–120% of the rated current set on the dial.

Reversing motor starter with phase-loss protective device

■ Description

This reversing motor starter uses two contactors and TK type thermal overload relay. The TK relay is provided with a heater element and a built-in mechanism for phase-loss protection use, which match with the thermal characteristics of 3-phase squirrel-cage rotor motor. This eliminates the possibility of damage in the case of the motor overheating.

The TK relay also features manual tripping, a trip-free mechanism, MANUAL/AUTO selector lever, wide range dial ampere adjustment, ambient temperature compensator and 1NO•1NC trip/alarm contact, etc.
Starters can be supplied with either open type or provided with enclosures. The general purpose enclosure is made of pressed steel and is not provided with a pushbutton.

■ Types and ratings/Non-reversing

Max. motor capacity (kW) 200V 240V	380V 440V	Operational current (A) 200V 240V	380V 440V	Auxiliary contact Standard	Open Type	Ordering code	Enclosed Type	Ordering code	Combined thermald overload relay
2.5	4	11	9	1NO *1	**SW-03/2E**	SC11AAE-■10T□	**SW-03C/2E**	SC11CAE-■10T□	TK-0N
3.5	5.5	13	12	1NO *1	**SW-0/2E**	SC13AAE-■10T□	**SW-0C/2E**	SC13CAE-■10T□	TK-0N
3.5	5.5	13	12	1NO+1NC *2	**SW-05/2E**	SC14AAE-■11T□	**SW-05C/2E**	SC14CAE-■11T□	TK-0N
4.5	7.5	18	16	1NO *1	**SW-4-0/2E**	SC18AAE-■10T□	**SW-4-0C/2E**	SC18CAE-■10T□	TK-5-1N
5.5	11	22	22	1NO *1	**SW-4-1/2E**	SC19AAE-■10T□	**SW-4-1C/2E**	SC19CAE-■10T□	TK-5-1N
5.5	11	22	22	1NO+1NC *3	**SW-5-1/2E**	SC20AAE-■11T□	**SW-5-1C/2E**	SC20CAE-■11T□	TK-5-1N
7.5	15	32	32	2NO+2NC *4	**SW-N1/2E**	SC25BAAE-■22T□	**SW-N1C/2E**	SC25BCAE-■22T□	TK-N2
11	18.5	40	40	2NO+2NC *4	**SW-N2/2E**	SC35BAAE-■22T□	**SW-N2C/2E**	SC35BCAE-■22T□	TK-N2
15	22	50	50	2NO+2NC *4	**SW-N2S/2E**	SC50BAAE-■22T□	**SW-N2SC/2E**	SC50BCAE-■22T□	TK-N3
18.5	30	65	65	2NO+2NC *4	**SW-N3/2E**	SC65BAAE-■22T□	**SW-N3C/2E**	SC65BCAE-■22T□	TK-N3
22	40	80	80	2NO+2NC *4	**SW-N4/2E**	SC80BAAE-■22T□	**SW-N4C/2E**	SC80BCAE-■22T□	TK-N5
30	55	105	105	2NO+2NC *4	**SW-N5A/2E**	SC93CAAE-■22T□	**SW-N5AC/2E**	SC93CCAE-■22T□	TK-N5
37	60	125	125	2NO+2NC *4	**SW-N6/2E**	SC1CBAAE-■22T□	**SW-N6C/2E**	SC1CBCAE-■22T□	TK-N6
45	75	150	150	2NO+2NC *4	**SW-N7/2E**	SC1FBAAE-■22T□	**SW-N7C/2E**	SC1FBCAE-■22T□	TK-N7
55	90	180	180	2NO+2NC *4	**SW-N8/2E**	SC1JBAAE-■22T□	**SW-N8C/2E**	SC1JBCAE-■22T□	TK-N8
65	110	220	220	2NO+2NC *4	**SW-N10/2E**	SC2CBAAE-■22T□	**SW-N10C/2E**	SC2CBCAE-■22T□	TK-N10
90	160	300	300	2NO+2NC *4	**SW-N11/2E**	SC3ABAAE-■22T□	**SW-N11C/2E**	SC3ABCAE-■22T□	TK-N11
120	220	400	400	2NO+2NC *4	**SW-N12/2E**	SC4ABAAE-■22T□	**SW-N12C/2E**	SC4ABCAE-■22T□	TK-N12
180	315	600	600	2NO+2NC *4	**SW-N14/2E**	SC6ABAAE-■22T□	**SW-N14C/2E**	SC6ABCAE-■22T□	TK-N14

Notes: Enter the coil voltage code in the ■ mark.
Enter the thermal overload relay ampere setting range code in the □ mark.
*1 Auxiliary contact 1NC is available on request.
*2 Auxiliary contact 2NO or 2NC is available on request.
*3 Auxiliary contact 2NO, 2NC or 2NO+2NC is available on request. However, 2NO+2NC is not available for enclosed types.
*4 Auxiliary contact 4NO+4NC is available on request for frame sizes N1 and above.

■ Types and ratings/Reversing

Max. motor capacity (kW) 200V 240V	380V 440V	Operational current (A) 200V 240V	380V 440V	Auxiliary contact Standard	Open Type	Ordering code	Enclosed Type	Ordering code	Combined thermald overload relay
2.5	4	11	9	1NC × 2 *1	**SW-03RM/2E**	SC11RAE-■01T□	**SW-03RMC/2E**	SC11MAE-■01T□	TK-0N
3.5	5.5	13	12	1NC × 2 *1	**SW-0RM/2E**	SC13RAE-■01T□	**SW-0RMC/2E**	SC13MAE-■01T□	TK-0N
3.5	5.5	13	12	(1NO+1NC) × 2 *2	**SW-05RM/2E**	SC14RAE-■11T□	**SW-05RMC/2E**	SC14MAE-■11T□	TK-0N
4.5	7.5	18	16	1NC × 2 *1	**SW-4-0RM/2E**	SC18RAE-■01T□	**SW-4-0RMC/2E**	SC18MAE-■01T□	TK-5-1N
5.5	11	22	22	1NC × 2 *1	**SW-4-1RM/2E**	SC19RAE-■01T□	**SW-4-1RMC/2E**	SC19MAE-■01T□	TK-5-1N
5.5	11	22	22	(1NO+1NC) × 2 *3	**SW-5-1RM/2E**	SC20RAE-■11T□	**SW-5-1RMC/2E**	SC20MAE-■11T□	TK-5-1N
7.5	15	32	32	(2NO+2NC) × 2 *4	**SW-N1RM/2E**	SC25BRAE-■22T□	**SW-N1RMC/2E**	SC25BMAE-■22T□	TK-N2
11	18.5	40	40	(2NO+2NC) × 2 *4	**SW-N2RM/2E**	SC35BRAE-■22T□	**SW-N2RMC/2E**	SC35BMAE-■22T□	TK-N2
15	22	50	50	(2NO+2NC) × 2 *4	**SW-N2SRM/2E**	SC50BRAE-■22T□	**SW-N2SRMC/2E**	SC50BMAE-■22T□	TK-N3
18.5	30	65	65	(2NO+2NC) × 2 *4	**SW-N3M/2E**	SC65BRAE-■22T□	**SW-N3RMC/2E**	SC65BMAE-■22T□	TK-N3
22	40	80	80	(2NO+2NC) × 2 *4	**SW-N4RM/2E**	SC80BRAE-■22T□	**SW-N4RMC/2E**	SC80BMAE-■22T□	TK-N5
30	55	105	105	(2NO+2NC) × 2 *4	**SW-N5ARM/2E**	SC93CRAE-■22T□	**SW-N5ARMC/2E**	SC93CMAE-■22T□	TK-N5
37	60	125	125	(2NO+2NC) × 2 *4	**SW-N6RM/2E**	SC1CBRAE-■22T□	**SW-N6RMC/2E**	SC1CBMAE-■22T□	TK-N6
45	75	150	150	(2NO+2NC) × 2 *4	**SW-N7RM/2E**	SC1FBRAE-■22T□	**SW-N7RMC/2E**	SC1FBMAE-■22T□	TK-N7
55	90	180	180	(2NO+2NC) × 2 *4	**SW-N8RM/2E**	SC1JBRAE-■22T□	**SW-N8RMC/2E**	SC1JBMAE-■22T□	TK-N8
65	110	220	220	(2NO+2NC) × 2 *4	**SW-N10RM/2E**	SC2CBRAE-■22T□	**SW-N10RMC/2E**	SC2CBMAE-■22T□	TK-N10
90	160	300	300	(2NO+2NC) × 2 *4	**SW-N11RM/2E**	SC3ABRAE-■22T□	**SW-N11RMC/2E**	SC3ABMAE-■22T□	TK-N11
120	220	400	400	(2NO+2NC) × 2 *4	**SW-N12RM/2E**	SC4ABRAE-■22T□	**SW-N12RMC/2E**	SC3ABMAE-■22T□	TK-N12
180	315	600	600	(2NO+2NC) × 2 *4	**SW-N14RM/2E**	SC6ABRAE-■22T□	**SW-N14RMC/2E**	SC6ABMAE-■22T□	TK-N14

Notes: Enter the coil voltage code in the ■ mark.
Enter the thermal overload relay ampere setting range code in the □ mark.
*1 Auxiliary contact 1NO×2 is available on request. However, these contactors are not electrically interlocked. Be sure to arrange electrical interlock circuit externally to avoid short-circuit accidents.
*2 Auxiliary contact 2NC×2 is available on request.
*3 Auxiliary contact 2NC×2 or (2NO+2NC)×2 is available on request.
However, (2NO+2NC)×2 is not available for enclosed types.
*4 Auxiliary contact (3NO+3NC)×2 is available on request.

Magnetic Motor Starters
SW series With phase-loss and phase-sequence protective device

Motor starters with phase-loss and phase-sequence relays

Up to 315kW 440 Volts 3-phase

■ Description

These starters are fitted with TK type thermal overload relay and phase-sequence relay. The phase-sequence relay only permits engagement of the starter when the phase rotation is confirmed to be correct.
These switches are mainly used for construction site machinery, window shutters, machine tools, compressors, freezers, conveyors, underwater pumps, car washing machines, blowers and similar applications. They give excellent protection against damage and overheating resulting from phase-loss operation.

■ Ordering information

Specify the following:
1. Ordering code
   2E type motor starter and phase sequence relay QE-20N.
2. Overload relay setting range code
3. Operating coil voltage code

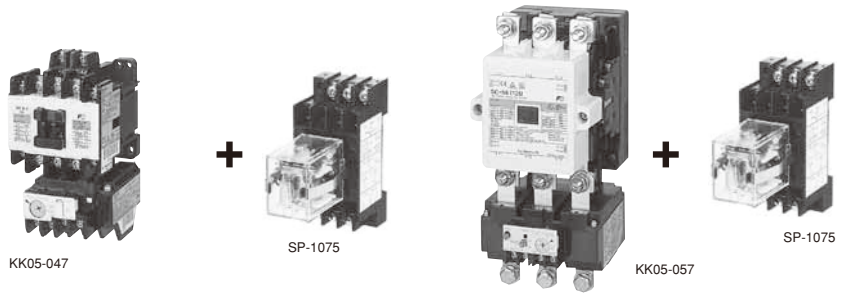

SW-5-1/2E **QE-20N** **SW-N6/2E** **QE-20N**

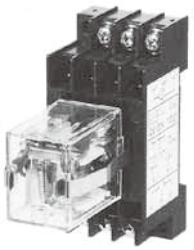

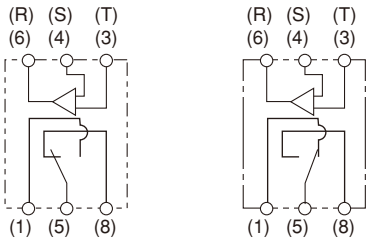

Phase sequence protective relay QE-20N

• Power off
• Phase-sequence is not correct.

Phase-sequence is correct.

■ Types and ratings

Max. motor capacity (kW) 200V 240V	380V 440V	Operational current (A) 200V 240V	380V 440V	Auxiliary contact Standard	Starter with 2E type thermal overload relay Type	Ordering code	Phase-sequence protective relay Type	Ordering code
2.5	4	11	9	1NO *1	**SW-03/2E**	SC11AAE-■10T□	200-220V:	
3.5	5.5	13	12	1NO *1	**SW-0/2E**	SC13AAE-■10T□	**QE-20N**	TQ1CPN
3.5	5.5	13	12	1NO + 1NC *2	**SW-05/2E**	SC14AAE-■10T□		
4.5	7.5	18	16	1NO *1	**SW-4-0/2E**	SC18AAE-■10T□	380-415V:	
5.5	11	22	22	1NO *1	**SW-4-1/2E**	SC19AAE-■10T□	**QE-40N**	TQ2CPN
5.5	11	22	22	1NO + 1NC *3	**SW-5-1/2E**	SC20AAE-■11T□		
5.5	11	22	22	2NO + 2NC	**SW-5-1/2E**	SC20AAE-■22T□		
7.5	15	32	32	2NO + 2NC *4	**SW-N1/2E**	SC25BAAE-■22T□		
11	18.5	40	40	2NO + 2NC *4	**SW-N2/2E**	SC35BAAE-■22T□		
15	22	50	50	2NO + 2NC *4	**SW-N2S/2E**	SC50BAAE-■22T□		
18.5	30	65	65	2NO + 2NC *4	**SW-N3/2E**	SC65BAAE-■22T□		
22	40	80	80	2NO + 2NC *4	**SW-N4/2E**	SC80BAAE-■22T□		
30	55	105	105	2NO + 2NC *4	**SW-N5A/2E**	SC93CAAE-■22T□		
37	60	125	125	2NO + 2NC *4	**SW-N6/2E**	SC1CBAAE-■22T□		
45	75	150	150	2NO + 2NC *4	**SW-N7/2E**	SC1FBAAE-■22T□		
55	90	180	180	2NO + 2NC *4	**SW-N8/2E**	SC1JBAAE-■22T□		
65	110	220	220	2NO + 2NC *4	**SW-N10/2E**	SC2CBAAE-■22T□		
90	160	300	300	2NO + 2NC *4	**SW-N11/2E**	SC3ABAAE-■22T□		
120	220	400	400	2NO + 2NC *4	**SW-N12/2E**	SC4ABAAE-■22T□		
180	315	600	600	2NO + 2NC *4	**SW-N14/2E**	SC6ABAAE-■22T□		

Notes: Enter the coil voltage code in the ■ mark.
Enter the thermal overload relay ampere setting range code in the □ mark.
*1 Auxiliary contact 1NC is available on request.
*2 Auxiliary contact 2NO or 2NC is available on request.
*3 Auxiliary contact 2NO or 2NC is available on request.
*4 Auxiliary contact 4NO+4NC is available on request for frame sizes N1 and above.

■ Performance data:

Same as standard types.
See page A1-22.

■ Ratings of coil and auxiliary contacts:

See pages A1-20, 22 and 23.

■ TK type thermal overload relays:

See page A1-102.

■ Thermal overload relays with phase-loss and phase-sequence protective relays

Motor starters with 3E relay are fitted with both TK type thermal overload and QE-20N type phase-sequence protective relays.
If the phase rotation of the power supply is not correct the relay will not permit the starter to be switched ON.
These starters provide motors with accurate and consistent protection under overcurrent, phase-loss and reverse-phase conditions.

■ Method of operation

The FUJI phase-sequence relay contacts 1–5 will close if the phase rotation of the power source is correct.
In case the rotation is incorrect the contacts 1–5 will remain open and the magnetic coil A1–A2 will not be energized.

■ Dimensions, mm

● **Starter with phase-loss protection**
SW-03/2E to N14/2E (Open)
Same as standard types.
See pages A1-29 to A1-32.

■ Wiring diagrams (example)

● **QE-20N, 20NL**
200–220V

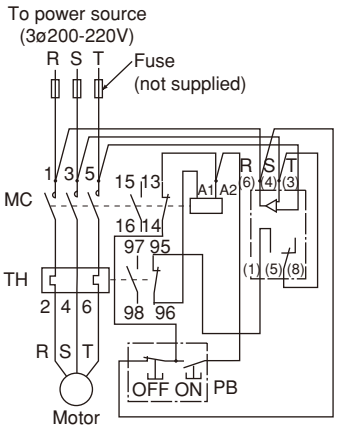

● **QE-40N**
380–415V

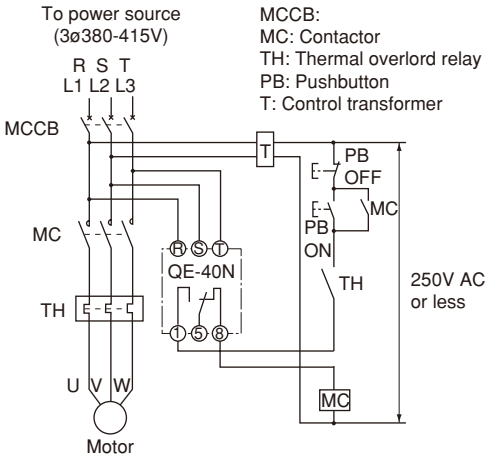

● **Phase-sequence protective relay**
QE-20N, 20NL

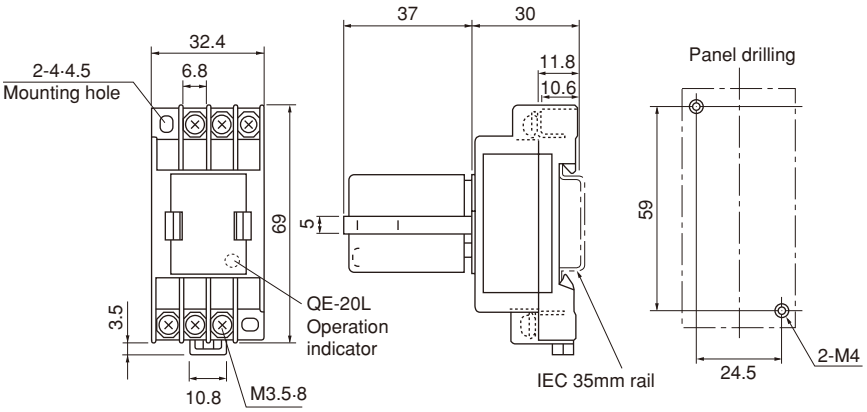

QE-40N

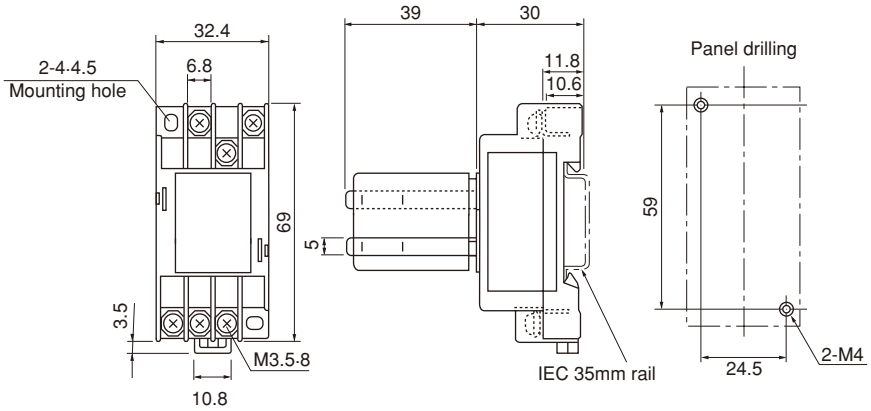

Dimensions for reference only. Confirm before construction begins.

Magnetic Motor Starters
SW series Enclosed with pushbuttons

SW-03P to N1P was discontinued.
The replacement model is FJ-B09WP to 32WP.
Please refer to the leaflet (62C9-E-0136).

Motor starters with on-off/reset pushbuttons

Up to 110kW 440 Volts

■ Description

It is provided with on-off push-buttons.
Its small size makes little demand on space.
The enclosure is a general purpose type and is made of pressed steel sheet. (Plastic enclosure for
SW-03P to SW-5-1P)
Compact, space-saving and easily mounted FUJI integral motor starters are highly reliable and efficient products to satisfy your application requirements.
They are used with single and 3-phase squirrel-cage induction motors.
Essentially consisting of a magnetic contactor and a thermal overload relay these units provide complete motor overload protection with the convenience of an outside reset button mounted on the front of the starter box.

● Contactors

FUJI integral motor starters use the SC series of contactors. All starters incorporate the usual FUJI features.
These include free-floating magnetic mechanisms, bounce damping devices, long-life low-maintenance silver alloy contacts and rapid heat-dispersing arc-quenchers. Starter exceed IEC specifications as far as service life is concerned.
Choice of FUJI equipment will ensure you reduced maintenance, inspection and labor costs and uninterrupted dependable service.
Available motor capacities are from 4kW to 110kW at 380 Volts.

● Thermal overload relays

Highly efficient heater elements and ambient temperature compensators give motors added protection and more uniform performance.
They are fitted with 3-pole heater elements, and resetting is carried out manually with the reset button.

■ Coil ratings:

See page A1-22.
Same as standard type starters.

KKD06-010

SW-0P/3H

■ Performance data:

- Operating cycle: 1,200 cycles per hours
- Life expectancy (operations)
  Mechanical: 250,000
  Electrical: 250,000

■ Thermal overload relay:

See page A1-87.
Same as standard type starters.

■ Ordering information

Specify the following:
1. Ordering code
2. Overload relay setting range code
3. Operating coil voltage code

■ Ratings

Max. motor capacity (kW) Single-phase 110V	3-phase 200V 240V	3-phase 380V 440V	Auxiliary contact Standard	With on-off/reset pushbutton Type	Ordering code	With on-off pushbutton Type	Ordering code	Combined thermal overload relay
0.4	2.5	4	1NO	**SW-03P/3H**	SC11PAN-■10T□D	–		TR-0N/3
0.5	3.5	5.5	1NO	**SW-0P/3H**	SC13PAN-■10T□D	–		TR-0N/3
0.5	3.5	5.5	1NO+1NC	**SW-05P/3H**	SC14PAN-■11T□D	–		TR-0N/3
0.6	4.5	7.5	1NO	**SW-4-0P/3H**	SC18PAN-■10T□D	–		TR-5-1N/3
0.8	5.5	11	1NO	**SW-4-1P/3H**	SC20PAN-■10T□D	–		TR-5-1N/3
0.8	5.5	11	1NO+1NC	**SW-5-1P/3H**	SC20PAN-■11T□D	–		TR-5-1N/3
1.2	7.5	15	2NO+2NC	**SW-N1PB/3H**	SC25BSAN-■22T□D	**SW-N1P/3H**	SC25BPAN-■22T□D	TR-N2/3
1.7	11	18.5	2NO+2NC	**SW-N2PB/3H**	SC35BSAN-■22T□D	**SW-N2P/3H**	SC35BPAN-■22T□D	TR-N2/3
–	15	22	2NO+2NC	**SW-N2SPB/3H**	SC50BSAN-■22T□D	**SW-N2SP/3H**	SC50BPAN-■22T□D	TR-N3/3
–	18.5	30	2NO+2NC	**SW-N3PB/3H**	SC65BSAN-■22T□D	**SW-N3P/3H**	SC65BPAN-■22T□D	TR-N3/3
–	22	40	2NO+2NC	**SW-N4PB/3H**	SC80BSAN-■22T□D	–		TR-N5/3
–	30	55	2NO+2NC	**SW-N5PB/3H**	SC93BSAN-■22T□D	–		TR-N5/3
–	37	60	2NO+2NC	**SW-N6PB/3H**	SC1CBSAN-■22T□D	–		TR-N6/3
–	55	90	2NO+2NC	**SW-N8PB/3H**	SC1JBSAN-■22T□D	–		TR-N8/3
–	65	110	2NO+2NC	**SW-N10PB/3H**	SC2CBSAN-■22T□D	–		TR-N10/3

Notes: 2-element is available on request.
Enter the coil voltage code in the ■ mark.
Enter the thermal overload relay ampere setting range code in the □ mark.

■ Wiring diagrams

SW-03P/3H, 0P/3H
SW-4-0P/3H, 4-1P/3H

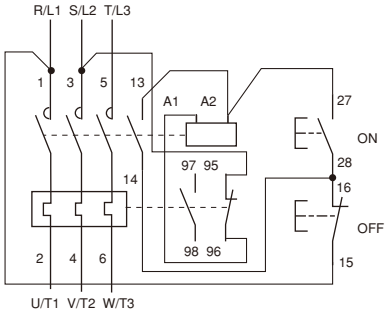

SW-05P/3H, 5-1P/3H

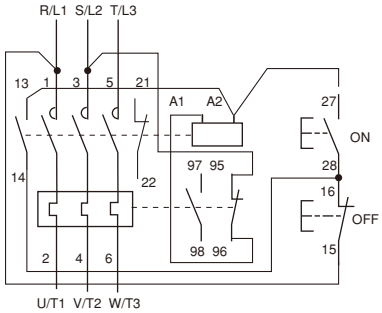

SW-N1PB/3H to N10PB/3H
SW-N1P/3H to N3P/3H

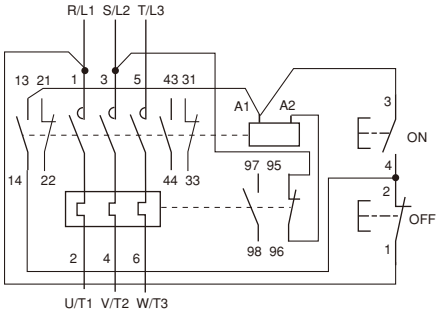

Fuji Electric FA Components & Systems Co., Ltd.
Information subject to change without notice

■ Dimensions, mm

SW-03P to SW-5-1P

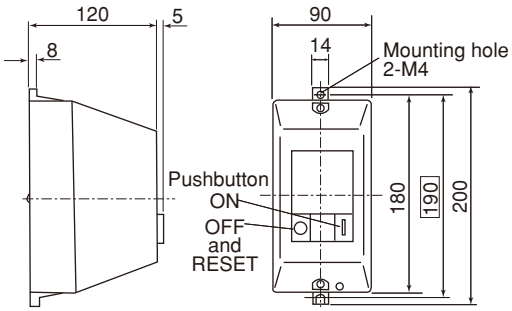

Type	Mass (kg)
SW-03P/3H	0.82
SW-0P/3H	0.82
SW-05P/3H	0.84
SW-4-0P/3H	0.86
SW-4-1P/3H	0.86
SW-5-1P/3H	0.89

Plastic enclosure

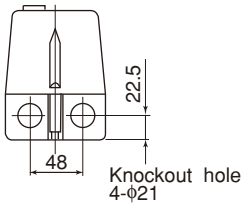

SW-N1PB to SW-N5PB
SW-N1P to SW-N3P

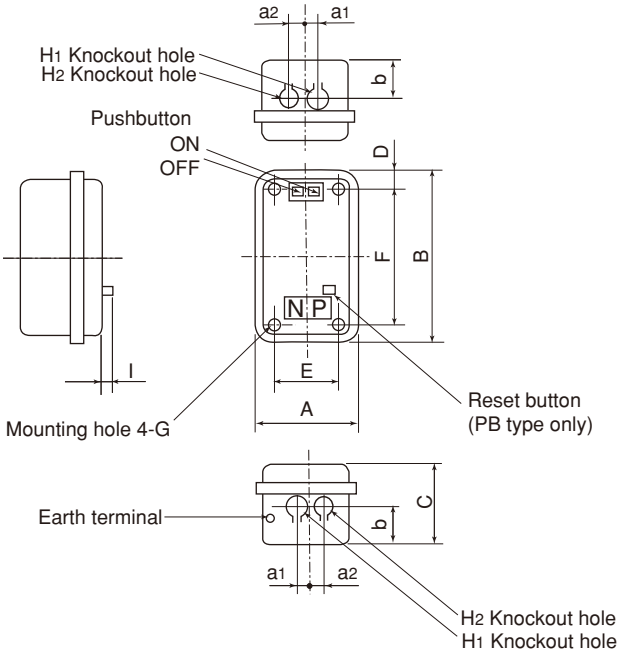

SW-N6PB to SW-N10PB

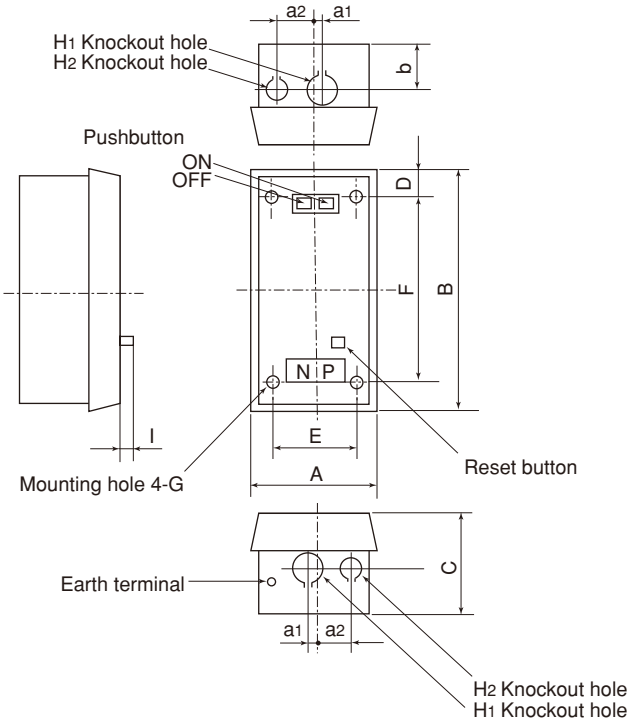

Type		A	B	C	D	E	F	G	H_1	H_2	I	a_1	a_2	b	Mass (kg) PB type	Mass (kg) P type
SW-N1PB/3H	**N1P/3H**	175	320	145	35	110	250	M6	ϕ35	ϕ28	12	15	35	70	2.6	2.5
SW-N2PB/3H	**N2P/3H**	175	320	145	35	110	250	M6	ϕ35	ϕ28	12	15	35	70	2.6	2.5
SW-N2SPB/3H	**N2SP/3H**	175	320	145	35	110	250	M6	ϕ35	ϕ28	12	15	35	70	3.2	3.1
SW-N3PB/3H	**N3P/3H**	175	320	145	35	110	250	M6	ϕ35	ϕ28	12	15	35	70	3.2	3.1
SW-N4PB/3H		200	400	160	37	125	325	M8	ϕ43	ϕ28	12	20	40	80	4.6	–
SW-N5PB/3H		200	400	160	37	125	325	M8	ϕ43	ϕ28	12	20	40	80	5.0	–
SW-N6PB/3H		225	450	180	50	150	350	M8	ϕ52	ϕ28	12	10	70	80	8.6	–
SW-N8PB/3H		335	670	225	85	200	500	M10	ϕ78	ϕ28	11	–	100	95	18.2	–
SW-N10PB/3H		335	670	225	85	200	500	M10	ϕ78	ϕ28	11	–	100	95	19.3	–

Mass: with 3-thermal element

Magnetic Motor Starters
SW series Dust-tight/light-corrosion resistance

Dust-tight/light-corrosion resistance starters

■ Description

When selecting a motor starter the operating conditions must be carefully considered. Attention must be given to such problems as dust, chemically aggressive atmosphere, water, oil and hazardous materials.
We can supply enclosures that meet the special needs of such industries as the cement and textile industries, where dust and lint can be expected, and the fertilizer, synthetic fiber, oil refining and electrochemical and metal-plating industries where corrosive gases and materials can affect the performance of electrical equipment.
A pressed metal enclosure designed for use in locations where dust, lint, fibers and similar airborne materials are present. The hingeless-type cover is provided with a corrosion-resistant rubber gasket and it is secured by screws. Knockout holes are situated at the top and bottom of the enclosure to accept conduit hubs or glands. This type is for indoor use.

The outside surface of the enclosure is treated with a special anti-corrosion coating. This type of case is recommended for cement and fertilizer plants and similar dusty locations. It is also suitable for oil refineries, breweries and metal-plating workshops and coastal areas where aggressive chemical conditions can be expected. This type of enclosure is not suitable for hazardous gas or hazardous dust locations.

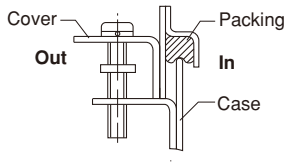

■ Ordering information

Specify the following:
1. Ordering code
2. Overload relay setting range code
3. Operating coil voltage code
4. Method of wiring works and size of conduit pipe
5. Type and density of gas

KKD18-027
SW-0LG/3H

■ Types and ratings: *See page A1-25.*

Same as standard enclosed type.

■ Performance data:

Same as standard type.
See page A1-22.

■ Ratings of coil and auxiliary contact:

See pages A1-20, 22 and 23.

■ Thermal overload relay:

See page A1-87.

■ Application for special atmosphere

Description	Standard type	Dust-tight/light corrosion res. (lg)
Dust-tight	–	○
Moisture-proof	○	○
Drip-proof	–	–
Splashing-proof	–	○
Rain-proof	–	–
Corrosion-resistant		
Light	○	○
Medium	–	○
Hazardous locations	–	–
Gas-tight	–	–

Note: ○ : Available
– : Not available

■ Dimensions, mm

SW-03LG to SW-5-1LG

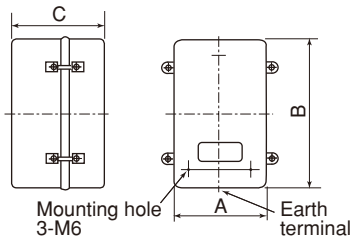

SW-N1LG to SW-N5ALG

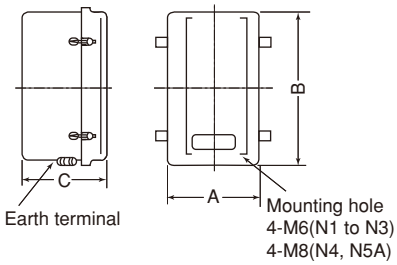

Dimensions for reference only. Confirm before construction begins.

SW-N6LG to N10LG

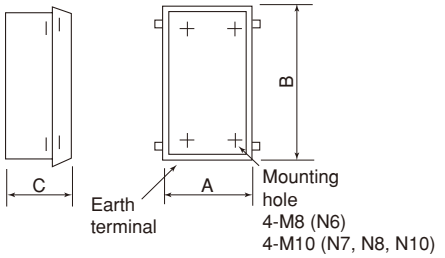

Type	Ordering code	Aux. contact	A	B	C	Mass (kg)
SW-03LG/3H	SC11LAN-■10T□D	1NO	120	195	117	1.4
SW-0LG/3H	SC13LAN-■10T□D	1NO	120	195	117	1.4
SW-05LG/3H	SC14LAN-■11T□D	1NO + 1NC	120	195	117	1.4
SW-4-0LG/3H	SC18LAN-■10T□D	1NO	120	195	117	1.5
SW-4-1LG/3H	SC19LAN-■10T□D	1NO	120	195	117	1.5
SW-5-1LG/3H	SC20LAN-■11T□D	1NO +1NC	120	195	117	1.5
SW-N1LG/3H	SC25BLAN-■22T□D	2NO + 2NC	145	246	135	2.0
SW-N2LG/3H	SC35BLAN-■22T□D	2NO + 2NC	145	246	135	2.0
SW-N2SLG/3H	SC50BLAN-■22T□D	2NO + 2NC	175	320	145	3.1
SW-N3LG/3H	SC65BLAN-■22T□D	2NO + 2NC	175	320	145	3.1
SW-N4LG/3H	SC80BLAN-■22T□D	2NO + 2NC	200	400	160	4.5
SW-N5ALG/3H	SC93CLAN-■22T□D	2NO + 2NC	200	400	160	4.5
SW-N6LG/3H	SC1CBLAN-■22T□D	2NO + 2NC	225	450	180	8.5
SW-N7LG/3H	SC1FBLAN-■22T□D	2NO + 2NC	280	588	210	12.3
SW-N8LG/3H	SC1JBLAN-■22T□D	2NO + 2NC	335	698	225	18.1
SW-N10LG/3H	SC2CBLAN-■22T□D	2NO + 2NC	335	698	225	18.8

■: Coil voltage code □: Thermal overload relay ampere setting range code

Resistance load magnetic contactors

■ Description

These single pole contactors are for exclusively resistive load use. They are provided with large and sturdy parallel plate terminals attached to the 3-pole standard contactors to make them suitable for large current ratings.
Typical applications are for industrial heating controls, PVA processing, solution vats, electric resistance furnaces, heat treatment facilities, drying kilns, farming, marine farming, lighting and similar purposes.

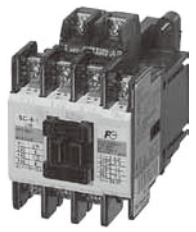
KK04-085

SC-4-1

+

AF88-510

SZ-SP2

■ Ordering information

Specify the following:
1. Ordering code
2. Operating coil voltage code
3. State clearly “with parallel plate terminals for attaching to contactor”.
4. Application and rated load current

■ Types and ratings

Operational current (A) 110V/220V	Auxiliary contact NO	NC	Making and breaking current	Operating cycles per hour	Life expectancy (operations) Electrical	Mechanical	Contactor Type	Ordering code	3-pole parallel terminal plate Type	Ordering code
25	1	–	1.5 × Ie	150	500,000	10 millions	**SC-03**	SC11AA-■10	**SZ-SP1**	SZ1SP1
30	1	–	1.5 × Ie	150	500,000	10 millions	**SC-0**	SC13AA-■10	**SZ-SP1**	SZ1SP1
30	1	1	1.5 × Ie	150	500,000	10 millions	**SC-05**	SC14AA-■11	**SZ-SP1**	SZ1SP1
40	1	–	1.5 × Ie	150	500,000	10 millions	**SC-4-0**	SC18AA-■10	**SZ-SP2**	SZ1SP2
50	1	–	1.5 × Ie	150	500,000	10 millions	**SC-4-1**	SC19AA-■10	**SZ-SP2**	SZ1SP2
50	1	1	1.5 × Ie	150	500,000	10 millions	**SC-5-1**	SC20AA-■11	**SZ-SP2**	SZ1SP2
50	2	2	1.5 × Ie	150	500,000	10 millions	**SC-5-1**	SC20AA-■22	**SZ-SP2**	SZ1SP2
100	2	2	1.5 × Ie	150	500,000	5 millions	**SC-N1**	SC25BAA-■22	**SZ-SP3**	SZ2SP3
125	2	2	1.5 × Ie	150	500,000	5 millions	**SC-N2**	SC35BAA-■22	**SZ-SP3**	SZ2SP3
200	2	2	1.5 × Ie	150	250,000	5 millions	**SC-N2S**	SC50BAA-■22	**SZ-SP4**	SZ2SP4
250	2	2	1.5 × Ie	150	250,000	5 millions	**SC-N3**	SC65BAA-■22	**SZ-SP4**	SZ2SP4
315	2	2	1.5 × Ie	150	250,000	5 millions	**SC-N4**	SC80BAA-■22	**SZ-SP5**	SZ2SP5
400	2	2	1.5 × Ie	150	250,000	5 millions	**SC-N5A**	SC93CAA-■22	**SZ-SP5**	SZ2SP5
400	2	2	1.5 × Ie	150	250,000	5 millions	**SC-N6**	SC1CBAA-■22	**SZ-SP6**	SZ2SP6
500	2	2	1.5 × Ie	150	250,000	5 millions	**SC-N7**	SC1FBAA-■22	**SZ-SP7**	SZ2SP7
630	2	2	1.5 × Ie	150	250,000	5 millions	**SC-N8**	SC1JBAA-■22	**SZ-SP8**	SZ2SP8
710	2	2	1.5 × Ie	150	250,000	5 millions	**SC-N10**	SC2ABAA-■22	**SZ-SP8**	SZ2SP8
900	2	2	1.5 × Ie	150	250,000	5 millions	**SC-N11**	SC3ABAA-■22	**SZ-SP9**	SZ2SP9
1000	2	2	1.5 × Ie	150	250,000	5 millions	**SC-N12**	SC4ABAA-■22	**SZ-SP9**	SZ2SP9
1600	2	2	1.5 × Ie	150	250,000	5 millions	**SC-N14**	SC6ABAA-■22	**SZ-SP10**	SZ2SP10
2100	2	2	1.5 × Ie	150	100,000	2,500,000	**SC-N16**	SC8ABAA-■22	**SZ-SP11**	SZ2SP11

Notes: 1. ■: Coil voltage code, *see page A1-18*
2. Ie: Rated operational current. Conforming to Class AC-1, IEC60947-4-1.

■ Dimensions, mm

SC-03 + SZ-SP1 to SC-5-1 + SZ-SP2

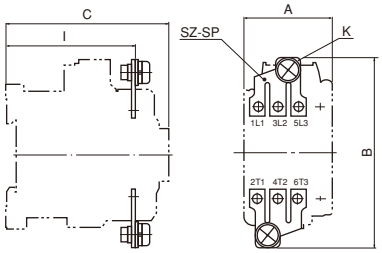

Type		A	B	C	I	K	Mass (g) *
SC-03+SZ-SP1		43	90	80	63	M6	25
SC-0+SZ-SP1		43	90	80	63	M6	25
SC-05+SZ-SP1		53	90	80	63	M6	25
SC-4-0+SZ-SP2		53	100	81	63	M6	35
SC-4-1+SZ-SP2		53	100	81	63	M6	35
SC-5-1+SZ-SP2	1NO•1NC	64	100	81	63	M6	35
	2NO•2NC	64	100	109	63	M6	35
SC-N1, N2+SZ-SP3		74	132	96	64	M8	110
SC-N2S, N3+SZ-SP4		88	174	111	75.5	M10	200
SC-N4+SZ-SP4		88	215	117	77	M12	320

SC-N1+SZ-SP3 to SC-N16+SZ-SP11

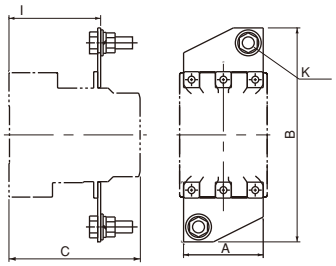

Type	A	B	C	I	K	Mass (g) *
SC-N5A+SZ-SP4	88	215	132	92	M12	320
SC-N6+SZ-SP6	100	300	138	98	M12×2	760
SC-N7+SZ-SP7	115	312	140	98	M12×2	800
SC-N8, N10+SZ-SP8	138	371	174	120	M12×2	1300
SC-N11, N12+SZ-SP9	153	420	195	135	M12×4	3000
SC-N14+SZ-SP10	290	525	328	246	M12×4	4400
SC-N16+SZ-SP11	290	525	328	246	M12×4	5900

*Mass: 3-pole parallel terminal plate only

Magnetic Contuctors
SC series With single button auxiliary contact

Magnetic contactors with single button auxiliary contact

■ Description

The SC-03H to N12H contactors are improved versions of the standard SC-03 to SC-N12 contactors.
The improvement consists of changing the auxiliary contact from a bifurcated to a single button type contact. This change increases the auxiliary contact rating.
The specifications, including the main contact rating and the expected electrical service life, are similar to that of the SC-03 to N12 types.
The options for the SC series, such as the coil surge suppressor and mechanical interlock can also be used.

■ Type number nomenclature

SC-□-H

- **With single button auxiliary contact**
- **Frame size**
  03, 0, 05, 4-0, 4-1, 5-1, N1, N2, N2S, N3, N4, N5A, N6, N7, N8, N10, N11, N12
- **Basic type**
  SC: Magnetic contactor

■ Performance data

Same as standard types

■ Ordering information

Specify the following:
1. Ordering code
2. Operating coil voltage code
3. Auxiliary contact arrangement code.

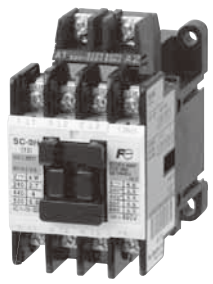

KKD06-036

SC-0H

■ Coil voltage

Same as standard type, *See page A1-22*

■ Ratings (Conforming to AC-3, IEC 60947-4-1)

Type	Ordering code	Max. motor capacity (kW) 3-phase 200V 240V	380V 440V	500V 550V	600V 660V	Rated operational current (A) 3-phase 200V 240V	380V 440V	500V 550V	600V 660V	Rated thermal current (A)	Auxiliary contact Standard
SC-03H	SC11AH-■10	2.5	4	4	4	11	9	7	5	20	1NO
SC-0H	SC13AH-■10	3.5	5.5	5.5	5.5	13	12	9	7	20	1NO
SC-05H	SC14AH-■11	3.5	5.5	5.5	5.5	13	12	9	7	20	1NO+1NC
SC-4-0H	SC18AH-■10	4.5	7.5	7.5	7.5	18	16	13	9	25	1NO
SC-4-1H	SC19AH-■10	5.5	11	11	7.5	22	22	17	9	32	1NO
SC-5-1H	SC20AH-■11	5.5	11	11	7.5	22	22	17	9	32	1NO+1NC
SC-5-1H	SC20AH-■22	5.5	11	11	7.5	22	22	17	9	32	2NO+2NC *
SC-N1H	SC25BAH-■11	7.5	15	15	11	32	32	24	15	50	2NO+2NC
SC-N2H	SC35BAH-■11	11	18.5	18.5	15	40	40	29	19	60	2NO+2NC
SC-N2SH	SC50BAH-■11	15	22	25	22	50	50	38	26	80	2NO+2NC
SC-N3H	SC65BAH-■11	18.5	30	37	30	65	65	60	38	100	2NO+2NC
SC-N4H	SC80BAH-■11	22	40	37	37	80	80	60	44	135	2NO+2NC
SC-N5AH	SC93CAH-■11	30	55	55	55	105	105	85	64	150	2NO+2NC
SC-N6H	SC1CBAH-■11	37	60	60	60	125	125	90	72	150	2NO+2NC
SC-N7H	SC1FBAH-■11	45	75	75	90	150	150	120	103	200	2NO+2NC
SC-N8H	SC1JBAH-■11	55	90	130	132	180	180	180	150	260	2NO+2NC
SC-N10H	SC2CBAH-■11	65	110	132	132	220	220	200	150	260	2NO+2NC
SC-N11H	SC3ABAH-■11	90	160	160	200	300	300	230	230	350	2NO+2NC
SC-N12H	SC4ABAH-■22	120	220	250	300	400	400	360	360	360	2NO+2NC

Notes: Enter the coil voltage code in the ■ mark
* With auxiliary contact block SZ-A11 (1NO+1NC)

■ Auxiliary contact ratings (Conforming to IEC 60947-5-1)

Type	Continuous current (A)	Make/break current (AC, A)	Rated operational current (A) AC Voltage (V)	AC-15 (Ind. load)	AC-12 (Res. load)	DC Voltage (V)	DC-13 (Ind. load)	DC-12 (Res. load)
SC-03H to SC5-1H	10	60	100–120	6	10	24	5	10
			200–240			48	1.5	5
		40	380–440	4	10	110	0.7	4
			500–550			220	0.27	1
SC-N1H to SC-N12H	10	60	100–120	6	10	24	10	10
			200–240			48	3	5
		40	380–440	4	10	110	1.5	2.5
		25	500–600	2.5	10	220	0.5	1

Magnetic Contactors and Starters
SC and SW series With quick connection terminals

Contactors and starters with quick connection terminals

■ Feature

- Easy wiring
  Wiring time is at least 50% shorter than previous type.
- Safety
  The finger protection feature protects the charging current part during maintenance and check (complying with EN60947-4-1, and IEC60947-4-1)
- International use
  The product and terminal structure comply with international safety standards.
  It complies with VGB4, DIN57106, VDE0106, and VDE Teil 100 which are recommendation for preventing the exposure of charging current part.

Quick connection terminal

- When one crimp terminal is used

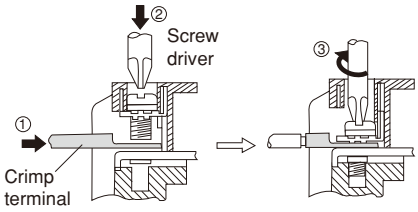

- When two crimp terminals are used

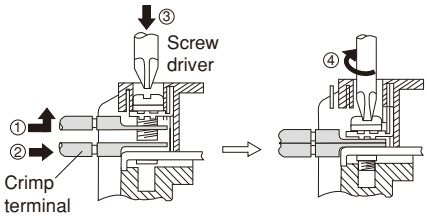

AF95-240

SW-0Y/3H

■ Types and rating

Max. motor capacity (kW) 3-phase AC-3 200V 240V	380V 440V	Rated operational corrent (A) 3-phase motor AC-3 200V 240V	380V 440V	Resistive load AC-1 200V 240V	380V 440V	Rated thermal current (A)	Auxiliary contact arrangement	Contactor Type	Starter 3-element Type
2.5	4	11	9	20	20	20	1NO 1NC	**SC-03Y10** **SC-03Y01**	**SW-03Y/3H10** **SW-03Y/3H01**
3.5	5.5	13	12	20	20	20	1NO 1NC	**SC-0Y10** **SC-0Y01**	**SW-0Y/3H10** **SW-0Y/3H01**
3.5	5.5	13	12	20	20	20	2NO 1NO,1NC 2NC	**SC-05Y20** **SC-05Y11** **SC-05Y02**	**SW-05Y/3H20** **SW-05Y/3H11** **SW-05Y/3H02**
5.5	11	22	22	32	32	32	2NO 1NO,1NC 2NC	**SC-5-1Y20** **SC-5-1Y11** **SC-5-1Y02**	**SW-5-1Y/3H20** **SW-5-1Y/3H11** **SW-5-1Y/3H02**

■ Ordering information

Specify the following:
1. Type number
2. Coil voltage (Contactor only)
3. Main circuit voltage (Starter only)
4. Thermal overload setting range code (Starter only)

See page A1-19.

■ Dimensions and panel drilling

Same as the standard types

■ Mass

Same as the standard types

■ Optional unit
Auxilliary contact blocks with quick connection terminals

Mounting	Thermal current (A)	Contact arrangement	Type
Front mounting	10	4NO 3NO+1NC 2NO+2NC	**SZ-A40Y** **SZ-A31Y** **SZ-A22Y**
		2NO 1NO+1NC 2NO	**SZ-A20Y** **SZ-A11Y** **SZ-A02Y**

AF95-246

SZ-A40Y, A31Y, A22Y

● Dimensions and contact arrangement diagrams

Same as the standard type auxiliary contact blocks.

See page A1-69.

■ Optional unit

Optional unit	Description	Type	Used with	Further information
Auxiliary contact block	**Front mounting** (Bifurcated)			*Page A1-69*
	4NO	**SZ-A40**	SC-03 to N3	
	3NO+1NC	**SZ-A31**		
	2NO+2NC	**SZ-A22**		
	2NO	**SZ-A20**		
	1NO+1NC	**SZ-A11**		
	2NC	**SZ-A02**		
	2NO+2NC (Overlapping)	**SZ-A222**		
	1NO+1NC (Overlapping)	**SZ-A111**		
	Front mounting (Single button)			
	4NO	**SZ-A40H**	SC-03 to N3	
	3NO+1NC	**SZ-A31H**		
	2NO+2NC	**SZ-A22H**		
	Side mounting(Bifurcated)			
	1NO+1NC	**SZ-AS1**	SC-03 to N3	
	1NO+1NC	**SZ-AS2**	SC-N4 to N12	
	1NO+1NC	**SZ-AS3N**	SC-N14 to N16	
	Side mounting(Single button)			
	1NO+1NC	**SZ-AS1H**	SC-03 to N3	
	1NO+1NC	**SZ-AS2H**	SC-N4 to N12	
	1NO+1NC	**SZ-AS3NH**	SC-N14, N16	
Auxiliary contact block with quick connection terminals	4NO	**SZ-A40Y**	SC-03Y, 0Y, 05Y, 5-1Y	*Page A1-65*
	3NO+1NC	**SZ-A31Y**		
	2NO+2NC	**SZ-A22Y**		
	2NO	**SZ-A20Y**		
	1NO+1NC	**SZ-A11Y**		
	2NC	**SZ-A02Y**		
Main circuit surge suppression unit	**Front mounting**	**SZ-ZM1**	SC-03 to 5-1	*Page A1-72*
		SZ-ZM3	SC-N1 to N3	
	Side mounting	**SZ-ZM2**	SC-03 to 5-1	
		SZ-ZM4	SC-N1 to N3	
Mechanical interlock unit		**SZ-RM**	SC-03 to N3	*Page A1-73*
Power connection kit for reversing		**SZ-RW1**	SC-03, 0	*Page A1-73*
		SZ-RW2	SC-05	
		SZ-RW3	SC-4-0, 4-1	
		SZ-RW4	SC-5-1	
		SZ-RW5	SC-N1, N2	
		SZ-RW6	SC-N2S, N3	
Coil drive unit for IC output	**Relay type**			*Page A1-70*
	Top mounting	**SZ-CD1**	SC-03 to 5-1	
		SZ-CD3	SC-N1 to N3	
	Left-side mounting	**SZ-CD5**	SC-N4 to N12	
	SSR type			
	Top mounting	**SZ-03/CD2-24**	SC-03 to 5-1	
		SZ-CD4	SC-N1 to N3	
	Left-side mounting	**SZ-CD6A**	SC-N4 to N12	
3-pole parallel plate terminal	(2 pcs/set)	**SZ-SP1**	SC-03, 0, 05	*Page A1-63*
		SZ-SP2	SC-4-0, 4-1, 5-1	
		SZ-SP3	SC-N1, N2	
		SZ-SP4	SC-N2S, N3	
		SZ-SP5	SC-N4, N5A	
		SZ-SP6	SC-N6	
		SZ-SP7	SC-N7	
		SZ-SP8	SC-N8, N10	
		SZ-SP9	SC-N11, N12	
		SZ-SP10	SC-N14	
		SZ-SP11	SC-N16	

Optional unit	Description	Type	Used with	Further information
Coil surge suppression unit	**Varistor**			*Page A1-71*
	24 to 48V AC/DC	**SZ-Z1**	SC-03 to 5-1, SC03/G to 5-1/G	
	100 to 250V AC/DC	**SZ-Z2**	SC-03 to 5-1, SC-03/G to 5-1/G	
	380 to 440V AC	**SZ-Z3**	SC-03 to 5-1	
	24 to 48V AC/DC(with LED)	**SZ-Z6**	SC-03 to 5-1, SC-03/G to 5-1/G	
	100 to 240V AC/DC(with LED)	**SZ-Z7**	SC-03 to 5-1, SC-03/G to 5-1/G	
	24 to 48V AC/DC	**SZ-Z31**	SC-N1 to N3, SC-N1/G to N3/G	
	100 to 250V AC/DC	**SZ-Z32**	SC-N1 to N3, SC-N1/G to N3/G	
	380 to 440V AC	**SZ-Z33**	SC-N1 to N3	
	24 to 48V AC/DC	**SZ-Z41**	SC-N4, N5A, SC-N4/G, N5/G	
	100 to 250V AC/DC	**SZ-Z42**	SC-N4, N5A, SC-N4/G, N5/G	
	380 to 440V AC	**SZ-Z43**	SC-N4, N5A	
	CR			
	24 to 48V AC/DC	**SZ-Z4**	SC-03 to 5-1, SC-03/G to 5-1/G	
	100 to 250V AC/DC	**SZ-Z5**	SC-03 to 5-1, SC-03/G to 5-1/G	
	24 to 48V AC/DC(with LED)	**SZ-Z8**	SC-03 to 5-1, SC-03/G to 5-1/G	
	100 to 240V AC/DC(with LED)	**SZ-Z9**	SC-03 to 5-1, SC-03/G to 5-1/G	
	24 to 48V AC	**SZ-Z34**	SC-N1 to N3	
	100 to 250V AC	**SZ-Z35**	SC-N1 to N3	
	24 to 48V DC	**SZ-Z36**	SC-N1/G to N3/G	
	100 to 250V DC	**SZ-Z37**	SC-N1/G to N3/G	
	24 to 48VAC	**SZ-Z44**	SC-N4, N5A	
	100 to 250V AC	**SZ-Z45**	SC-N4, N5A	
	24 to 48V DC	**SZ-Z46**	SC-N4/G, N5/G	
Fault detector unit	SPDT 100 to 120V AC	**SY-F-A3/M**	SC-03 to N16	*Contact FUJI*
	SPDT 200 to 240V AC	**SY-F-A4/M**		
Terminal cover	**For contactor**	**SZ-T1**	SC-03, 0	*Page A1-74*
		SZ-T2	SC-05	
		SZ-T3	SC-4-0, 4-1	
		SZ-T4	SC-5-1	
		SZ-T22	SC-N1, N2	
		SZ-T23	SC-N2S, N3	
	For contactor	**SZ-N4T**	SC-N4, N5A	
		SZ-N6T	SC-N6	
		SZ-N7T	SC-N7	
		SZ-N8T	SC-N8, N10	
		SZ-N11T	SC-N11, N12	
	For starter	**SZ-N4T, SZ-WN4T**	SW-N4/3H, N5A/3H	
		SZ-N6T, SZ-WN6T	SW-N6/3H	
		SZ-N7T, SZ-WN7T	SW-N7/3H	
		SZ-N8T, SZ-WN8T	SW-N8/3H	
		SZ-N8T, SZ-WN10T	SW-N10/3H	
		SZ-N11T, SZ-WN11T	SW-N11/3H, N12/3H	
	For reversing contactor	**SZ-N4RT1, T2**	SW-N4RM, N5ARM	
		SZ-N6RT1, T2	SW-N6RM	
		SZ-N7RT1, T2	SW-N7RM	
		SZ-N8RT1, T2	SW-N8RM, N10RM	
		SZ-N11RT1, T2	SW-N11RM, N12RM	

Magnetic Contactors and Starters
SC and SW series Optional unit

Optional unit	Description	Type	Used with	Further information
Terminal cover	**For thermal overload relay**	**SZ-T10**	SZ-HB	*Page A1-74*
		SZ-T11	SZ-HC	
		SZ-T12	TR-0N/3, TK-0N	
		SZ-T13	TR-5-1N/3, TK-5-1N	
		SZ-T14	TR-N2H/3, TK-N2H	
		SZ-T15	TR-N3H/3, TK-N3H	
		SZ-RN6T	TR-N6H/3, TKN6H	
		SZ-T16	TR-N2/3, TK-N2	
		SZ-T17	TR-N3/3, TK-N3	
	For auxiliary contact block			
	For 4-pole front mount	**SZ-T5**	SZ-A40, A31, A22, A222	
	For 2-pole front mount	**SZ-T6**	SZ-A20, A11, A02, A111	
	For 1-pole front mount	**SZ-T7**	SZ-AS1, AS2	
Insulation barrier	**For contactor**	**SZ-B1**	SC(SW)-N4 to N7, TR(TK)-N6H	*Page A1-75*
		SZ-B2	SC(SW)-N8 to N12, TR(TK)N10H/3 to N12H/3	
Off-delay release unit	100V AC 50/60Hz	**SZ1DE20-1**	SC-03/G to 5-1/G	*Page A1-46*
	110V AC 50/60Hz	**SZ1DE20-H**		
	200V AC 50/60Hz	**SZ1DE20-2**		
	220V AC 50/60Hz	**SZ1DE20-M**		
	100-110V AC, 50/60Hz	**SZ2DE35-1**	SC-N1/G, N2/G	
		SZ2DE65-1	SC-N2S/G, N3/G	
		SZ-N5/DE	SC-N4/SE, N5	
		SZ-N6/DE	SC-N6, N7	
		SZ-N8/DE	SC-N8, N10	
		SZ-N11/DE	SC-N11, N12	
		SZ-N14/DE	SC-N14	
	200-220V AC, 50/60Hz	**SZ2DE35-2**	SC-N1/G, N2/G	
		SZ2DE65-2	SC-N2S/G, N3/G	
		SZ-N5/DE	SC-N4/SE, N5	
		SZ-N6/DE	SC-N6, N7	
		SZ-N8/DE	SC-N8, N10	
		SZ-N11/DE	SC-N11, N12	
Live-section cover	**For contactor**	**SZ-JC1**	SC-03, 0	*Page A1-76*
		SZ-JC2	SC-05	
		SZ-JC3	SC-4-0, 4-1	
		SZ-JC4	SC-5-1	
		SZ-N1J	SC-N1, N2	
		SZ-N2SJ	SC-N2S, N3	
		SZ-N4J	SC-N4, N5A	
		SZ-N6J	SC-N6	
		SZ-N7J	SC-N7	
		SZ-N8J	SC-N8, N10	
		SZ-N11J	SC-N11, N12	
	For starter	**SZ-JW1**	SW-03/3H, 0/3H	
		SZ-JW2	SW-05/3H	
		SZ-JW3	SW-4-0/3H, 4-1/3H	
		SZ-JW4	SW-5-1/3H	
		SZ-WN1J	SW-N1/3H, N2/3H	
		SZ-WN2SJ	SW-N2S/3H, N3/3H	
		SZ-WN4J	SW-N4/3H, N5A/3H	
		SZ-WN6J	SW-N6/3H	
		SZ-WN7J	SW-N7/3H	
		SZ-WN8J	SW-N8/3H	
		SZ-WN10J	SW-N10/3H	
		SZ-WN11J	SW-N11/3H, N12/3H	
	For reversing starter	**SZ-WN4RJ**	SW-N4RM, N5ARM	
		SZ-WN6RJ	SW-N6RM	
		SZ-WN7RJ	SW-N7RM	
		SZ-WN8RJ	SW-N8RM	
		SZ-WN10RJ	SW-N10RM	
		SZ-WN11RJ	SW-N11RM, N12RM	

Auxiliary contact blocks SZ-A

■ Features

- Easy attaching of auxiliary contact block
  This contact block can be attached to magnetic motor starter and contactor with a snap-on fitting. Auxiliary contacts can be added easily at site.
  When a front mounting block is used, there is no need to enlarge contactor installation space. This helps to make the control panel smaller.
- Bifurcated contact is standard
  High reliable bifurcated contact makes it possible to input directly to electronic control circuits like programmable logic controllers.
- Auxiliary contact block with single button contacts is also available.
- Terminal number conforms to IEC standard

■ Standards

Except overlap and single button contact type

■ Performance

Operating frequency: 1800 times/hour
Mechanical durability: 10 million operations
Electrical durability:
500,000 operations (at 220V AC-15)

Type	Contact arrangement
Front mounting	
SZ-A40, A40H	4NO
SZ-A31, A31H	3NO+1NC
SZ-A22, A22H	2NO+2NC
SZ-A20	2NO
SZ-A11	1NO+1NC
SZ-A02	2NC
SZ-A111	1NO+1NC (Overlapping)
SZ-A222	2NO+2NC (Overlapping)
Side mounting	
SZ-AS1, AS1H	1NO+1NC
SZ-AS2, AS2H	1NO+1NC
SZ-AS3N, SZ-AS3NH	1NO+1NC

■ Caution on use

1. Front mounting auxiliary contact block and side mounting block cannot be attached to one contactor at the same time.
2. Only one front mounting block can be attached to one contactor.
3. Where mechanical latch unit is already attached, only side mounting auxiliary contact block can be attached.
4. Where interlock unit is already attached, side mounting auxiliary contact block can be attached on one side only.

KKD06-013
SZ-A22

KKD05-276
SZ-A11

AF00-258
SZ-AS1

■ Ratings

Type	Thermal current (A)	Make/break current (A)	Rated operational current (A)*2 AC voltage	Ind. load (AC-15)	Res. load (AC-12)	Minimum Voltage/ current
SZ-A□ **SZ-AS1** **SZ-AS2** **SZ-AS3N** **SZ-A□H** **SZ-AS1H** **SZ-AS2H** **SZ-AS3H** **SZ-AS3NH**	10	60 (60) 30 (60) 15 (40) 12 (40)*3	110V 220V 440V 550V	6 (6) 3 (6) 1.5 (4) 1.2 (4)*4	10 (10) 8 (10) 5 (10) 5 (10)	5V DC 3 mA (24 V DC 10mA)

Note: *1 Enter the contact arrangement code in the □ mark.
*2 DC ratings: Same as the auxiliary contact ratings of standard type contactors or contactors with single button contacts.
• ( ): In case of SZ-A□H (single button contact)
*3 25A in case of SZ-AZ2H and AS3NH.
*4 2.5A in case of SZ-AZ2H and AS3NH.

■ Dimensions, mm

SZ-A40, A40H, A31, A31H, A22, A22H, A222
SZ-A20, A11, A02, A111

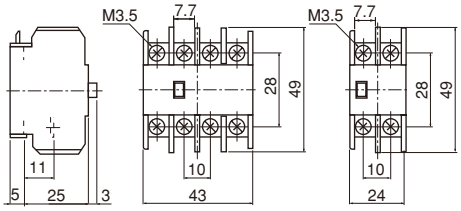

Mass: 36g Mass: 20g

SZ-AS3N, AS3NH

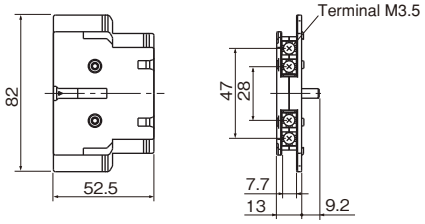

Mass: 38g

SZ-AS1, AS1H

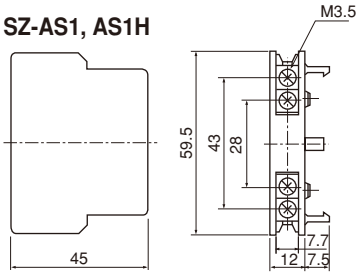

Mass: 28kg

SZ-AS2, AS2H

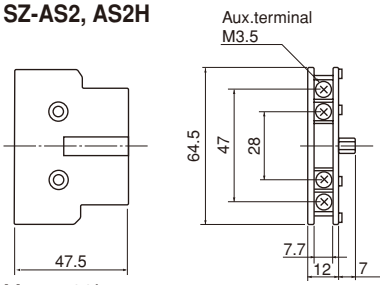

Mass: 33kg

■ Contact arrangement

SZ-A40, A40H
4NO
53 63 73 83
54 64 74 84

SZ-A20
2NO
53 63
54 64

SZ-AS1, AS2, AS3N, AS1H, AS2H, AS3NH
1NO+1NC
53 61
54 62
In cace of left side mounting

SZ-A31, A31H
3NO+1NC
53 61 73 83
54 62 74 84

SZ-A11
1NO+1NC
53 61
54 62

SZ-A22, A22H
2NO+2NC
53 61 71 83
54 62 72 84

SZ-A02
2NC
51 61
52 62

SZ-AS1, AS2, AS3N, AS1H, AS2H, AS3NH
1NO+1NC
71 83
72 84

SZ-A222
2NO+2NC
57 65 75 87
58 66 76 88

SZ-A111
1NO+1NC
57 65
58 66

In cace of right side mounting

Coil drive units for IC output SZ-CD

This unit is designed to carry out ON-OFF control for contactors with output (24V DC) from the electronic controller. It can be attached to a side or top of a contactor, thus saving on installation space.

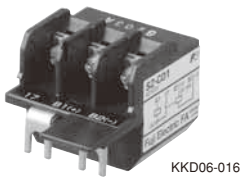

SZ-CD1

■ Features

- This unit operates at, 24V DC.
- Module type allows easy attachment and removal.
- SZ-CD5 and -CD6A can be installed individually and rail mounted.
- Surge suppression function (except SZ-CD5)
- This unit has a built-in surge suppression device (varistor) to protect electronic equipment from surges which occur when the coil is de-energized.

Type		Used with
SZ-CD1 **SZ-CD3** **SZ-CD5**	With relay output	SC-03 to 5-1 SC-N1 to N3 SC-N4 to N12
SZ-03/CD2-24 **SZ-CD4** **SZ-CD6A**	With SSR output	SC-03 to 5-1 SC-N1 to N3 SC-N4to N12

■ Specifications

Description		SZ-CD1	SZ-CD3, CD5	SZ-03/CD2-24,CD4,CD6A
Coil	Rated voltage Pick-up voltage (at 20°C) Drop-out voltage (at 20°C) Max. allowable voltage Power consumption	24V DC 85% or less of rated voltage Over 5% of rated voltage 130% or less of rated voltage 0.2W(8.3mA)	24V DC 85% or less of rated voltage Over 5% of rated voltage 130% or less of rated voltage 0.2W(8.3mA)	24V DC 70% or less of rated voltage Over 5% of rated voltage 110% or less of rated voltage 0.36W(15mA) (SZ-CD6A: 0.372W(15.5mA))
Contact	Output device Max. make/break voltage Operating time(ms)	Relay output 250V AC, 110V DC 2-5	Relay output 250V AC 2-5(SZ-CD5: 3-6)	SSR output 100-240V AC 1 or less (SZ-CD6A: 2 or less)

■ Dimensions, mm

SZ-CD1,03/CD2-24 (Top mount)

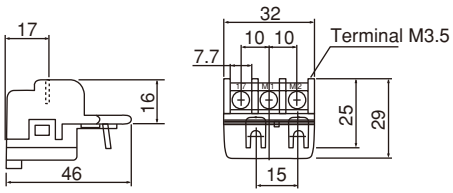

Mass: 26g

SZ-CD3,CD4 (Top mount)

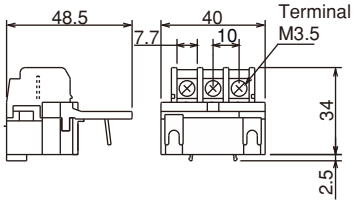

Mass: 28g

SZ-CD5,CD6A (Side mount)

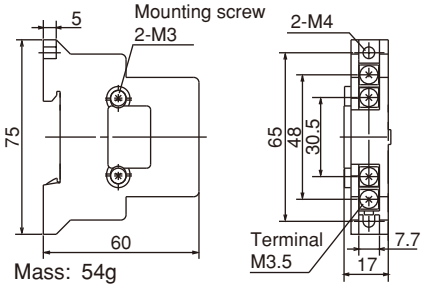

Mass: 54g

■ Wiring diagrams

SZ-CD1 **SZ-03/CD2-24**

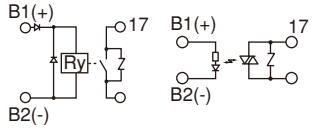

SZ-CD3 **SZ-CD4**

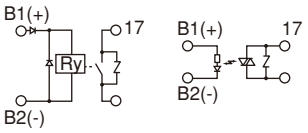

SZ-CD5 **SZ-CD6A**

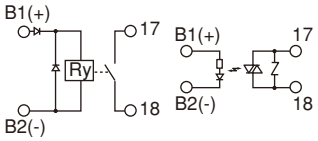

Coil surge suppression units SZ-Z

■ Description

This unit suppresses coil surge voltage due to contactor ON-OFF operations. This unit can be easily connected to contactor coil terminals.
Varistor types cut the peak value of surge voltages and CR types suppress rapid increases of surge voltage.
Standard type contactors SC-N6 to N16 are provided with surge suppression devices.

Coil surge suppression unit (for SC-03 to 5-1, SC-N1 to N5A)

Type	Device	Coil voltage	Used with
SZ-Z1	Varistor	24–48V AC/DC	SC-03 to 5-1
SZ-Z2	Varistor	100–250V AC/DC	SC-03/G to 5-1/G
SZ-Z3	Varistor	380–440V AC	
SZ-Z4	CR	24–48V AC/DC	
SZ-Z5	CR	100–250V AC/DC	
SZ-Z6 *	Varistor	24–48V AC/DC	
SZ-Z7 *	Varistor	100–250V AC/DC	
SZ-Z8 *	CR	24–48V AC/DC	
SZ-Z9 *	CR	100–250V AC/DC	
SZ-Z31	Varistor	24–48V AC/DC	SC-N1 to N3
SZ-Z32	Varistor	100–250V AC/DC	SC-N1/G to N3/G
SZ-Z33	Varistor	380–440V AC	SC-N1 to N3
SZ-Z34	CR	24–48V AC	SC-N1 to N3
SZ-Z35	CR	100–250V AC	
SZ-Z36	CR	24–48V DC	SC-N1/G to N3/G
SZ-Z37	CR	100–250V DC	
SZ-Z41	Varistor	24–48V AC/DC	SC-N4, N5A
SZ-Z42	Varistor	100–250V AC/DC	SC-N4/G, N5/G
SZ-Z43	Varistor	380–440V AC	SC-N4, N5A
SZ-Z44	CR	24–48V AC	
SZ-Z45	CR	100–250V AC	
SZ-Z46	CR	24–48V DC	SC-N4/G, N5/G

Note: * With LED operating indicator

KKD06-021

SZ-Z4

■ Dimensions, mm

SZ-Z1 to Z5
SZ-Z24, Z25

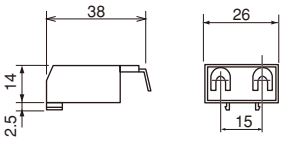

Mass: 14g

SZ-Z6 to Z9

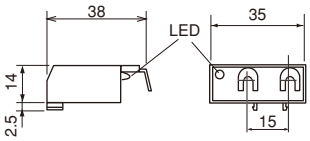

Mass: 16g

SZ-Z31 to Z37

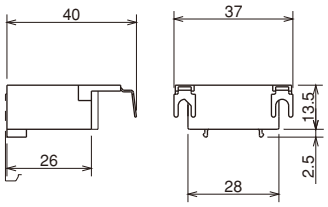

Mass: 15g

SZ-Z41 to Z46

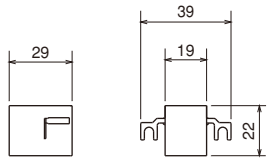

Mass: 15g

■ Characteristics(coil rated 200V AC)

● Without coil surge suppression unit
When current through a coil is interrupted, the sudden change of coil current, induces an abrupt surge voltage due to the coil inductance. The surge voltage sometimes produces noise which can damage or cause adjacent electronic devices to malfunction.

SC-0 (0.1msec/div, 1000V/div)
200V AC coil

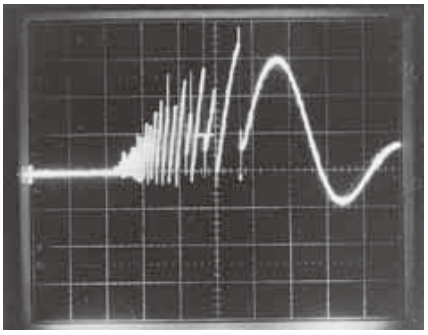

CP-487

● With coil surge suppression unit Varistor type
A surge voltage that exceeds a certain value causes a current to flow through the varistor connected in parallel with the coil, thereby suppressing peaks of the surge voltage. This surge suppression unit can be used in both AC and DC circuits.

SC-0+SZ-Z2 (2msec/div, 200V/div)
200V AC coil

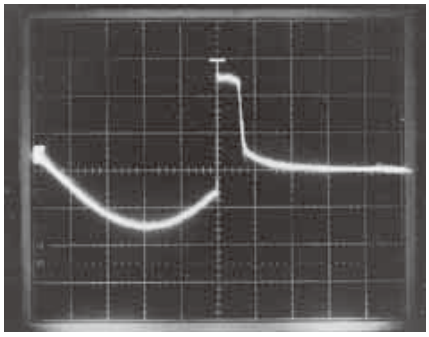

CP-489

● With coil surge suppression unit CR type
A CR (Capacitor-resistor) circuit connected in parallel with the coil suppresses the abrupt increase of surge voltage (dv/dt characteristics) by lowering the surge voltage oscillation frequency.
This surge suppression unit can be used in both AC and DC circuits.

SC-0+SZ-Z5 (2msec/div, 200V/div)
200V AC coil

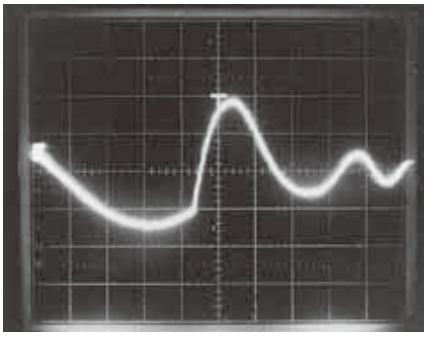

CP-488

Main circuit surge suppression units SZ-ZM

■ Description

This unit consists of delta connected capacitor (C) and resistor (R). When contactor is energized or de-energized, a surge voltage is generated from motor circuit. This unit suppresses this surge voltage and protects electronic equipment from malfunction or damage.
Space saving, front mounting type (SZ-ZM1) and side mounting type (SZ-ZM2), which allows simultaneous use of other front mounting optional unit.
Screw and DIN rail are mountable to each single unit.

Type	Mounting	Voltage	CR constant	Used with
SZ-ZM1 **SZ-ZM2**	Front Side	250V AC 50/60Hz	C=0.22μF R=100Ω	SC-03 to SC-5-1
SZ-ZM3 **SZ-ZM4**	Front Side	250V AC 50/60Hz	C=0.33μF R=47Ω	SC-N1 to SC-N3

Note: SZ-ZM1 is not applicable to SC-5-1 with auxiliary contact 2NO+2NC.

Type	Mounting	Used with
SZ-ZMH	Screw, Mounting rail	SZ-ZM2, ZM4

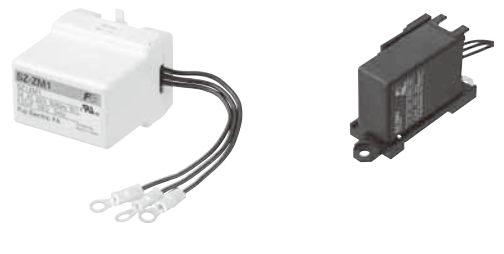

KKD06-022 KKD12-076

SZ-ZM1 **SZ-ZM2 + SZ-ZMH**

■ Performance

Dielectric strength: 230% × Rated voltage, 1min. between terminals
2 × Rated voltage + 1,000V, between terminals and case
Insulation resistance: 2,000MΩ or more
Capacitance tolerance: ±10% or less at 1kHz

■ Characteristics (200V AC 2.2kW motor)

● **With surge suppression unit**
(5μsec/div 200V/div)

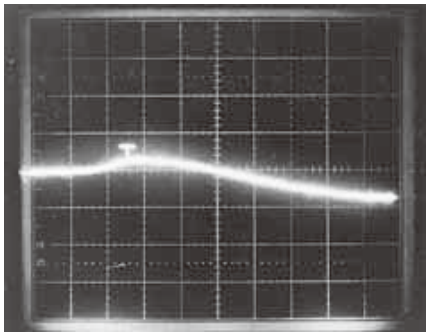

CP-486

● **Without surge suppression unit**
(5μsec/div 200V/div)

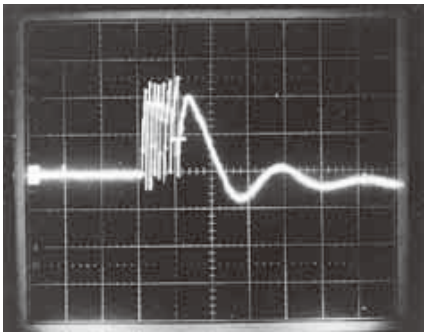

CP-485

■ Wiring example

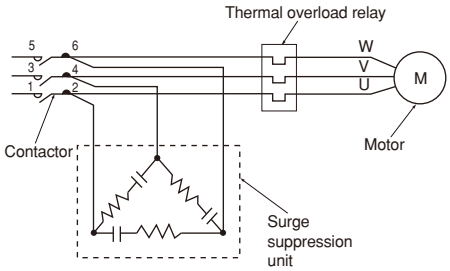

■ Dimensions, mm

SZ-ZM1, ZM3

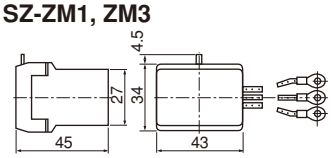

Mass: 60g

SZ-ZM2, ZM4

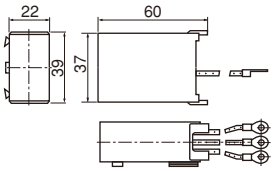

Mass: 60g

SZ-ZMH

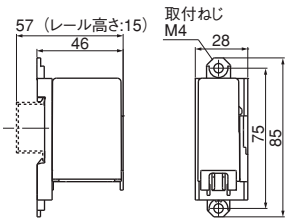

■ Mounting methods

● **Front mounting/SZ-ZM1, ZM3**

Set the unit on the contactor and slide it in direction ②.
Make sure that the unit's hook is in the mounting slot.
To detach the unit, push up on the units's hook and move the unit in the reverse of direction ②.
Connect the 3 lead wires of the unit to the contactor's load side terminals 2, 4 and 6. Wires can be connected to any of the terminals 2, 4 or 6.

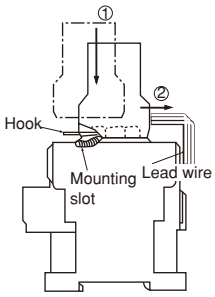

● **Side mounting /SZ-ZM2, ZM4**

Push the protruding portions of the unit into the mounting slots of the contactor.
Connect the 3 lead wires of the unit to the contactor's load side terminals 2, 4 and 6. Wires can be connected to any of the terminals 2,4 or 6.

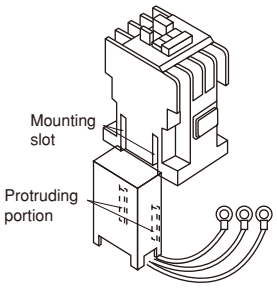

Mechanical interlock units and power connection kit for reversing

This SZ-RM unit consists of an interlock block, which mechanically prevents the simultaneous engagement of forward and reverse contactors, and a connector block.
A reversing contactor can be easily assembled with this unit at site.
An interlock mechanism prevents the engagement of 2 contactors at the same time.

Interlock unit		Power connection kit for reversing	
Type	Used with	Type	Used with
SZ-RM	SC-03 to N3	**SZ-RW1**	SC-03, SC-0
		SZ-RW2	SC-05
		SZ-RW3	SC-4-0, SC-4-1
		SZ-RW4	SC-5-1
		SZ-RW5	SC-N1, SC-N2
		SZ-RW6	SC-N2S, SC-N3

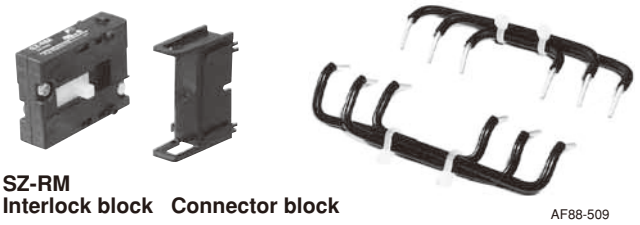

■ Mounting methods

1. Position an interlock block between two contactors so that the tall, square projections ① on the movable portions on either side of the interlock block fit into the square holes ② on the sides of the contactors. The short, round projections ③ on the sides of the interlock block should fit into the round holes ④ on the sides of the contactors.

2. Insert the guides ⑤ on the ends of the connector block into the slots ⑥ in the sides of the contactors and push the connector block in between the contactors until the frames ⑦ of the projecting windows on the ends of the connector block catch firmly on the hook-like projections ⑧ on the interlock block.

3. After connecting the contactors to each other, make sure that they operate smoothly by pressing down the movable manual operator one at a time.

4. To separate the contactors, insert the end of a flat-bladed screwdriver under the frame ⑦ of one of the projecting windows on the connector block and lift it up and over the hook-like projection ⑧ on the interlock block. While lifting up on the frame ⑦ , push against the connector block to eject it from between the contactors.

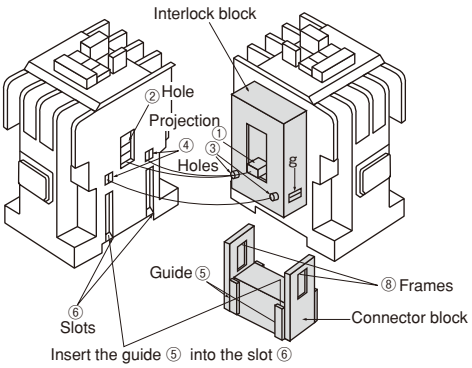

■ Dimensions, mm

Interlock block

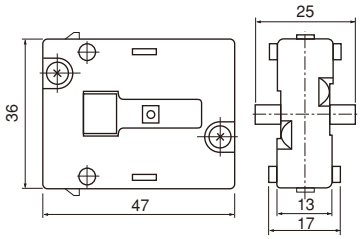

Mass: 18g

Connector block

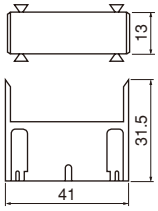

Mass: 4.2g

Power connection kit for reversing

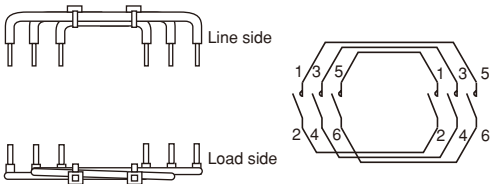

Cautions on attaching interlock unit to SC-03 and SC-0

Insert the protruded portion of the interlock unit into the upper (not lower) part of two slots on the side of the contactor by pressing the manual operator of the contactor.

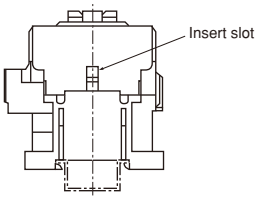

Magnetic Contactors and Starters
SC and SW series Optional unit

Terminal covers

The SZ-T type terminal cover conforms to DIN 57106 and VDE 0106 Teil 100 requirements regarding worker safety. The cover increases safety during maintenance and inspection.

Description	Type	Used with
For contactor	**SZ-T1** **SZ-T2** **SZ-T3** **SZ-T4** **SZ-T22** **SZ-T23** **SZ-N4T** **SZ-N6T** **SZ-N7T** **SZ-N8T** **SZ-N11T**	SC-03, 0, SH-4 SC-05, SH5 SC-4-0, 4-1 SC-5-1 SC-N1, N2 SC-N2S, N3 SC-N4, N5A SC-N6 SC-N7 SC-N8, N10 SC-N11, N12
For starter	**SZ-T1** **SZ-T12**	SW-03/3H, 0/3H
	SZ-T2 **SZ-T12**	SW-05/3H
	SZ-T3 **SZ-T13**	SW-4-0/3H, 4-1/3H
	SZ-T4 **SZ-T13**	SW-5-1/3H
	SZ-T22 **SZ-T16**	SW-N1/3H, N2/3H
	SZ-T23 **SZ-T17**	SW-N2S/3H, N3/3H
	SZ-N4T **SZ-WN4T**	SW-N4/3H, N5A/3H
	SZ-N6T **SZ-WN6T**	SW-N6/3H
	SZ-N7T **SZ-WN7T**	SW-N7/3H
	SZ-N8T **SZ-WN8T**	SW-N8/3H
	SZ-N8T **SZ-WN10T**	SW-N10/3H
	SZ-N11T **SZ-WN11T**	SW-N11/3H, N12/3H
For auxiliary contact block	**SZ-T5** **SZ-T6** **SZ-T7**	SZ-A40, A31, A22, A222 SZ-A40H, A31H, A22H SZ-A20, A11, A02, A111 SZ-AS1, AS2, AS3N SZ-AS1H, AS2H, AS3NH
For thermal overload relay on-contactor mounting	**SZ-T12** **SZ-T13** **SZ-T16** **SZ-T17**	TR-0N, TK-0N TR-5-1N, TK-5-1N TR-N2, TK-N2 TR-N3, TK-N3
For thermal overload relay overload relay mounting	**SZ-T14** **SZ-T15** **SZ-RN6T**	TR-N2H, TK-N2H TR-N3H, TK-N3H TR-N6H, TK-N6H
Thermal overload relay base unit for separate mounting	**SZ-T10** **SZ-T11**	SZ-HB SZ-HC
For coil drive unit	**SZ-T7**	SZ-CD5, SZ-CD6A

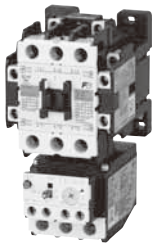
KKD08-121

SW-N1 + SZ-T22 + SZ-T16

KK05-080

SC-N6 + SZ-N6T + SZ-N6T

Description	Type	Used with
For reversing contactor	**SZ-T1** **SZ-T2** **SZ-T3** **SZ-T4** **SZ-T22** **SZ-T23**	SC-03RM, 0RM SC-05RM SC-4-0RM, 4-1RM SC-5-1RM SC-N1RM, N2RM SC-N2SRM, N3RM
	SZ-N4RT1 **SZ-N4RT2**	SC-N4RM, N5ARM
	SZ-N6RT1 **SZ-N6RT2**	SC-N6RM
	SZ-N7RT1 **SZ-N7RT2**	SC-N7RM
	SZ-N8RT1 **SZ-N8RT2**	SC-N8RM, N10RM
	SZ-N11RT1 **SZ-N11RT2**	SC-N11RM, N12RM
For reversing starter	**SZ-T1** **SZ-T12**	SW-03RM, 0RM
	SZ-T2 **SZ-T12**	SW-05RM
	SZ-T3 **SZ-T13**	SW-4-0RM, 4-1RM
	SZ-T4 **SZ-T13**	SW-5-1RM
	SZ-T22 **SZ-T16**	SW-N1RM, N2RM
	SZ-T23 **SZ-T17**	SW-N2SRM, N3RM

■ Contactors and starters with terminal cover

Contactors, starters, industrial relays, and thermal overload relays with a terminal cover are also available as the finger-protected type for the European market. Suffix the code /T at the end of the type number, when ordering, for this type.

Example
SC-03/T type: Contactor **SC-03**+Terminal cover **SZ-T1**
SW-03/3HT type: Starter **SW-03/3H**+Terminal cover **SZ-T1+SZ-T12**

Fuji Electric FA Components & Systems Co., Ltd.
Information subject to change without notice

Terminal covers (Continued)

■ Dimensions, mm

Contactors

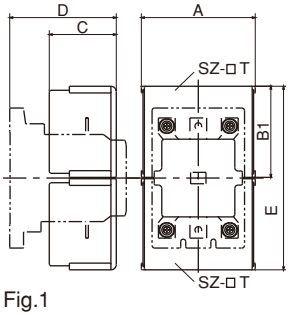

Fig.1

Starters

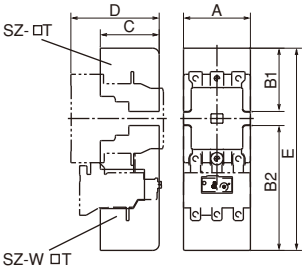

Fig.2

Reversing contactors

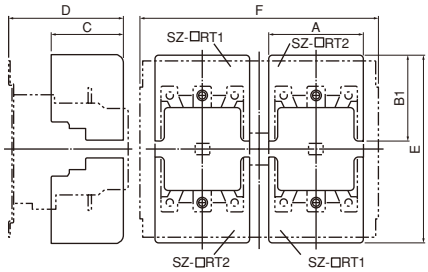

Fig.3

Type Line side	Load side	A	B1	B2	C	D	E	F	Fig. No.
SZ-N4T	**SZ-N4T**	97.5	90	—	91.5	119*1	199	—	1
SZ-N6T	**SZ-N6T**	100	94.5	—	88	132	210	—	1
SZ-N7T	**SZ-N7T**	115	104	—	89	134	228	—	1
SZ-N8T	**SZ-N8T**	138	126.5	—	100	161	274	—	1
SZ-N11	**SZ-N11T**	164	165.5	—	116	181	352	—	1
SZ-N4T	**SZ-WN4T**	97.5	90	143.5	91.5	119*1	252.5	—	2
SZ-N6T	**SZ-WN6T**	100	94.5	186.5	88	132	302	—	2
SZ-N7T	**SZ-WN7T**	115	104	193	89	134	317	—	2
SZ-N8T	**SZ-WN8T**	170	136	237	100	159	375	—	2
SZ-N8T	**SZ-WN10T**	170	136	228	100	159	366	—	2
SZ-N11T	**SZ-WN11T**	185	175	304	116	175	481	—	2
SZ-N4RT1	**SZ-N4RT2**	97.5	90	—	91.5	124*2	199	230	3
SZ-N6RT1	**SZ-N6RT2**	100	94.5	—	88	140	210	250	3
SZ-N7RT1	**SZ-N7RT2**	115	104	—	89	144	228	290	3
SZ-N8RT1	**SZ-N8RT2**	138	126.5	—	100	174	277	330	3
SZ-N11RT1	**SZ-N11RT2**	164	165.5	—	116	196	352	360	3

Note: *1 134 for SC-N5A, SW-N5A *2 139 for SC-N5ARM

■ Mounting methods

SZ-N4T, SZ-WN4T

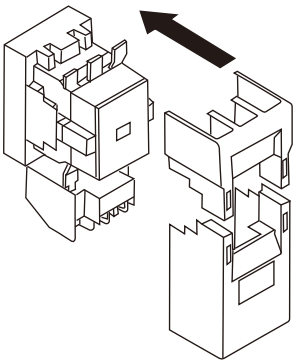

SZ-N6T to N11T, SZ-WN6T to WN11T

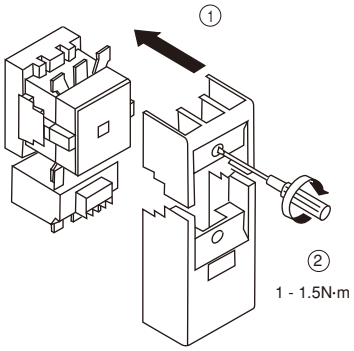

Insulation barriers for SC-N4 to N12

■ Features

These optional insulation barriers, prevent accidental short-circuits caused by metallic objects falling onto the terminals

SW-N6+SZ-B1

Description	Type	Used with
For contactor	**SZ-B1**	SC-N4, N5A, N6, N7
	SZ-B2	SC-N8, N10, N11, N12
For starter	**SZ-B1**	SW-N4/3H, N5A/3H, N6/3H, N7/3H
	SZ-B2	SW-N8/3H, N10/3H, N11/3H, N12/3H
For thermal overload relay	**SZ-B1**	TR-N6H, TK-N6H
	SZ-B2	TR-N10H, N12H, TK-N10H, N12H

■ Dimensions, mm

SZ-B1

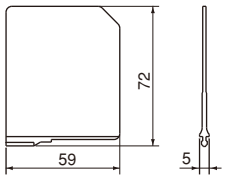

SZ-B2

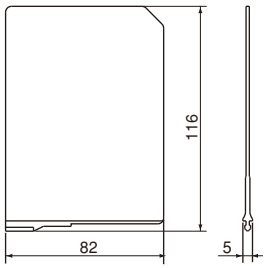

■ Mounting methods

Contactors

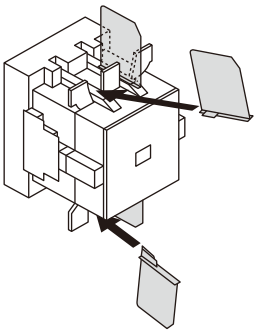

Starters

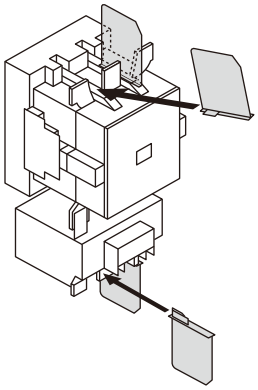

Thermal overload relays

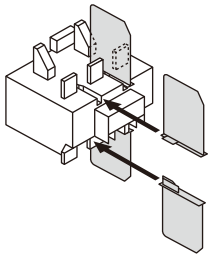

Magnetic Contactors and Starters
SC and SW series Optional unit

Live-section cover

The live-section cover completely encloses the front of a contactor or starter for increased worker safety during maintenance and inspection.

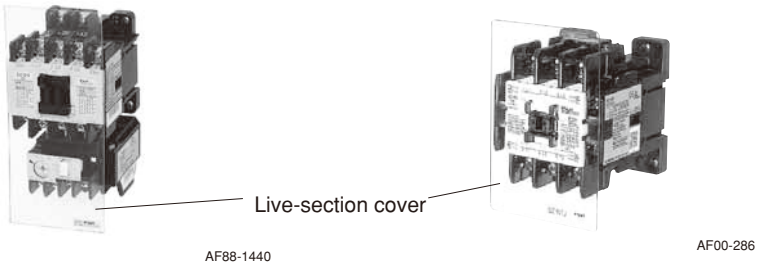

SW-5-1/3H+SZ-JW4 SC-N2+SZ-N1J

■ Dimensions, mm

- **Contactors**
- **Starters**

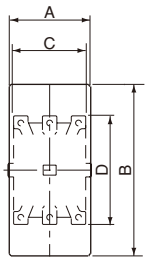

Fig. 1

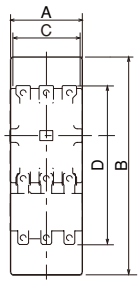

Fig. 2

■ Starters (reversing)

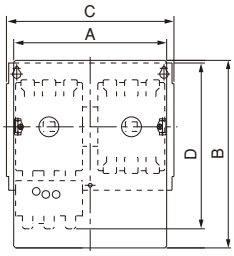

Fig. 3

■ Mounting methods

SZ-JC1 to JC4, SZ-N1J, N2SJ, SZ-JW1 to JW4 , SZ-WN1J, WN2SJ

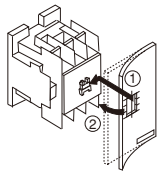

SZ-N4J to N11J, SZ-WN4J to WN1

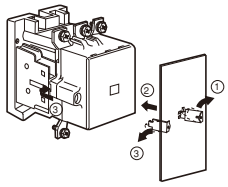

For contactor (Non-reversing)

Cover type	Contactor Type	Fig. No.	Live-section cover A	Live-section cover B	Contactor C	Contactor D
SZ-JC1	SC-03, 0	1	43	97	43	81
SZ-JC2	SC-05	1	53	97	53	81
SZ-JC3	SC-4-0, 4-1	1	53	100	53	81
SZ-JC4	SC-5-1	1	64	100	64	81
SZ-N1J	SC-N1, N2	1	74	120	74	87
SZ-N2SJ	SC-N2S, N3	1	88	140	88	110
SZ-N4J	SC-N4, N5A	1	93	192	88	127
SZ-N6J	SC-N6	1	106	214	100	144
SZ-N7J	SC-N7	1	120	233	115	156
SZ-N8J	SC-N8, N10	1	138	265	138	209
SZ-N11J	SC-N11, N12	1	160	336	148	240

For starter (Non-reversing)

Cover type	Starter Type	Fig. No.	Live-section cover A	Live-section cover B	Contactor C	Contactor D
SZ-JW1	SW-03/3H, 0/3H	2	44	140	44	122
SZ-JW2	SW-05/3H	2	53	140	53	122
SZ-JW3	SW-4-0/3H, 4-1/3H	2	53	145	53	127
SZ-JW4	SW-5-1/3H	2	64	145	64	127
SZ-WN1J	SW-N1/3H, N2/3H	2	74	175	74	146
SZ-WN2SJ	SW-N2S/3H, 3/3H	2	88	205	88	177
SZ-WN4J	SW-N4/3H, N5A/3H	2	93	254	88	189
SZ-WN6J	SW-N6/3H	2	106	281	100	225
SZ-WN7J	SW-N7/3H	2	120	300	115	237
SZ-WN8J	SW-N8/3H	2	138	347	138	305
SZ-WN10J	SW-N10/3H	2	138	347	138	287
SZ-WN11J	SW-N11/3H, N12/3H	2	160	423	148	360

For starter (reversing)

Cover type	Starter Type	Fig. No.	Live-section cover A	Live-section cover B	Contactor C	Contactor D
SZ-WN4RJ	SW-N4RM/3H, N5ARM/3H	3	204	254	230	208
SZ-WN6RJ	SW-N6RM/3H	3	229	281	250	247.5
SZ-WN7RJ	SW-N7RM/3H	3	258	300	290	266
SZ-WN8RJ	SW-N8RM/3H	3	291	347	330	370
SZ-WN10RJ	SW-N10RM/3H	3	291	347	330	370
SZ-WN11RJ	SW-N11RM/3H, N12RM/3H	3	328	423	360	480

Note: Side mounting types with 4NO + 4NC auxiliary contacts are available. Add the suffix "/4" to the type number when ordering.

2-pole DC magnetic contactors

Up to 55kW 220 Volts DC
Operational current up to 290 Amps 220 Volts DC

■ Description

These highly efficient SB series DC magnetic contactors are improved versions of the SC-N series contactors.
The magnetic assembly in these improved units is now the SUPER MAGNET so that these contactors will operate on both AC and DC power supplies and power consumption is minimized.

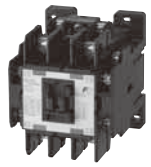

KKD12-088

SB-N2

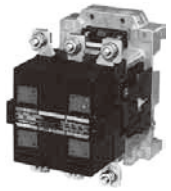

SK-437

SB-10N
SB-10NB

■ Features

- DC motor control
  5.5kW to 55kW (at 220V DC)
- Circuit voltage: Max. 550V DC
  Rated thermal current: Max. 360A
- A special magnetic blow-out device ensures improved interrupting performance.
- The main contact arrangement is 2NO. 2NO+1NC types are also available. The 1NC is used for Dynamic Brake circuits.
- The SUPER MAGNET system permits these contactors to operate on both AC and DC power supplies*.
- Auxiliary contacts can be supplied up to 4NO+4NC arrangement (2NO+2NC for standard products).

Note: * The SB-N2 (N2B) operates only on AC. The SB-N2/SE (N2B/SE) is provided with a SUPER MAGNET and operates on both AC and DC power supplies.

JEM 1038
DC2: For shunt-wound motors:
Starting, switching off during running. The starting current is less than 2.5 times the rated current.
DC4: For series-wound motors:
Starting, switching off during running. The starting current is less than 2.5 times the rated current.

■ Ordering code system

For SB-N2

S	B	3	5	C	A	A	—	E	2	2
①	②	③	④	⑤	⑦	⑥		⑧	⑨	⑩

For SB-N2 to N10

S	B	8	5	B	B	A	—	2	2	2
①	②	③	④	⑤	⑥	⑦		⑧	⑨	⑩

① Product category

Description	Code
Contactor and starter	S

② Series category

Description	Code
SB series	B

③④ Frame size

Frame size	Code ③	Code ④
N2	3	5
5N	8	5
6N	1	C
10N	2	A
11N	2	K

⑤ Version

Description	Code
Non-reversing, open	
Standard (N2)	C
Standard (5N to 10N)	B
UL approved	1

⑥ Coil specification

Description		Code
Standard	AC operating coil	A
	DC operating coil	G
	Both AC and DC operating coil	B
With SUPER MAGNET	Both AC and DC operating coil	S

⑦ Main contact

Contact arrangement	Code
2NO	A
2NO + 1NC	B
2NC	C
1NO + 2NC	D

⑧ Coil voltage

● AC coil/SB-N2

Operating coil voltage 50Hz	60Hz	Code
24V	24 — 26V	E
48V	48 — 52V	C
100V	100 — 110V	1
100 — 110V	110 — 120V	H
110 — 120V	120 — 130V	K
200V	200 — 220V	2
200 — 220V	220 — 240V	M
220 — 240V	240 — 260V	P
346 — 380V	380 — 420V	S
380 — 400V	400 — 440V	4
415 — 440V	440 — 480V	T
480 — 500V	500 — 550V	5

● AC and DC coil/SB-5N to 11N

Operating coil voltage AC 50/60Hz	DC	Code
24 — 25V	24V	E
48 — 50V	48V	F
100 — 127V	110 — 110V	1
200 — 250V	200 — 220V	2
265 — 347V	—	3
380 — 450V	—	4
460 — 575V	—	5

● DC coil/SB-N2/G

Operating coil voltage DC	Code
12V	B
24V	E
48V	F
100V	1
110V	H
200V	2
220V	M

● SUPER MAGNET/SB-N2/SE

Operating coil voltage AC 50/60Hz	DC	Code
24 — 25V	24V	E
48 — 50V	48V	F
100 — 127V	100V	1
200 — 250V	200V	2

⑨⑩ Auxiliary contact

Contact arrangement	Code ⑨	Code ⑩
2NO + 2NC	2	2
3NO + 3NC	3	3
4NO + 4NC	4	4

DC Magnetic Contactors
SB series

■ Types and ratings

Max. motor capacity (kW)			Rated operational current (A)			Rated thermal current	Auxiliary contact		With 2NO main contacts		With 2NO+1NC* main contacts	
110V	220V	440V	110V	220V	440V	(A)	NO	NC	Type	Ordering code	Type	Ordering code
3.7	5.5	7.5	40	35	20	60	2	2	**SB-N2**	SB35CAA-■22	**SB-N2B**	SB35CBA-■22
7.5	15	22	85	85	60	120	2	2	**SB-5N**	SB85BBA-■22	**SB-5NB**	SB85BBB-■22
11	22	30	125	120	80	160	2	2	**SB-6N**	SB1CBBA-■22	**SB-6NB**	SB1CBBB-■22
22	37	45	240	200	120	270	2	2	**SB-10N**	SB2ABBA-■22	**SB-10NB**	SB2ABBB-■22
30	55	75	320	290	200	360	2	2	**SC-11N**	SB2KBBA-■22	**SB-11NB**	SB2KBBB-■22

Notes: • Conforming to class DC2 and DC4, JEM 1038
• Auxiliary contact 4NO+4NC is available on request.
* For SB-N2B and SB-N2B/SE, 2NC or 1NO+2NC main contacts are also available.
■: Coil voltage code

Auxiliary contact

Type	Rated thermal current (A)	Making and breaking current (AC, A)	Rated operational current (A)					
			AC circuit Volts	AC-15 (ind.)	AC-12 (res.)	DC curcuit Volts	DC-13 (ind.)	DC-12 (res.)
SB-N2	10	60	100 to 120	6	10	24	3	5
		30	200 to 240	3	8	48	1.5	3
		15	380 to 440	1.5	5	110	0.55	2.5
		12	500 to 600	1.2	5	220	0.27	1
SB-5N to 11N **SB-5NB to 11NB**	10	60	110V	6	10	24V	5	10
			220V	6	10	48V	1.5	5
		40	440V	4	10	110V	0.55	2.5
		25	550V	2.5	10	220V	0.27	1

Note: For DC-13 (inductive load) time constant is 100ms or less.

■ NC contact ratings

Type	Rated thermal current (A)	Dynamic brake*		
		Making current (A)	Operating cycles per hour	Time rating (sec)
SB-N2, N2/G	50	60	600	3
SB-N2/SE	50	60		
SB-5NB	100	130		
SB-6NB	100	190		
SB-10NB	160	360		
SB-11NB	200	480		

Note: * Braking condition: No voltage

■ Performance data

NO contacts (2-pole in series)

Frame size	Making and braking capacity	Operating cycles per hour	Life expectancy (operations)	
			Electrical	Mechanical
SB-N2 to SB-11N	4 × Ie	1200	500,000	2.5 million

Ie: Rated operational current

Fuji Electric FA Components & Systems Co., Ltd.
Information subject to change without notice

■ Dimensions, mm

SB-N2

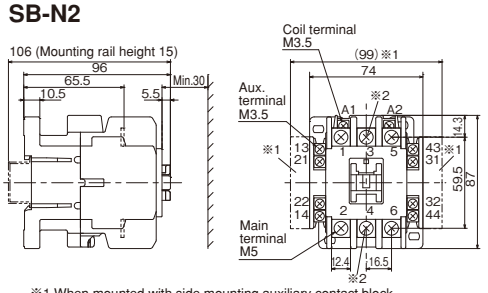

※1 When mounted with side mounting auxiliary contact block
※2 There's no terminal for No.3 or No.4 in case of 2A contact
Note: Be sure to mount by two diagonal mounting holes.
① (60～) 65×70: convertible with SB−2N,2NB. ② 45 (-50) ×75: mounting hole for IEC.

Mass: 0.59kg

SB-N2/G

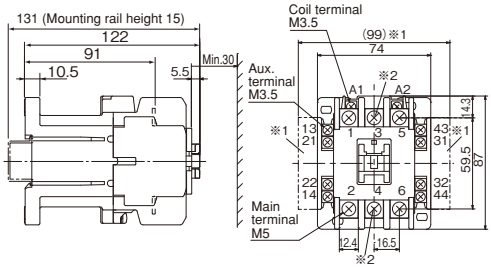

※1 When mounted with side mounting auxiliary contact block
※2 There's no terminal for No.3 or No.4 in case of 2A contact
Note: Be sure to mount by two diagonal mounting holes.

Mass: 0.85kg

SB-N2/SE

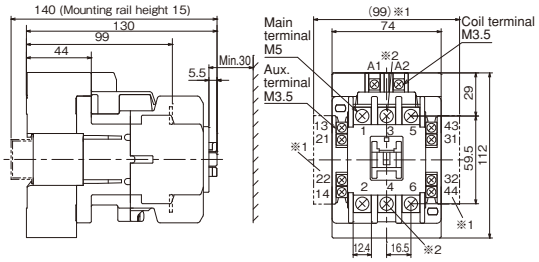

※1 When mounted with side mounting auxiliary contact block
※2 There's no terminal for No.3 or No.4 in case of 2A contact
Note: Be sure to mount by two diagonal mounting holes.
① (60～) 65×70: convertible with SB-2N/SE, 2NB/SE.

Mass: 0.87kg

SB-5N, SB-5NB, SB-6N, SB-6NB

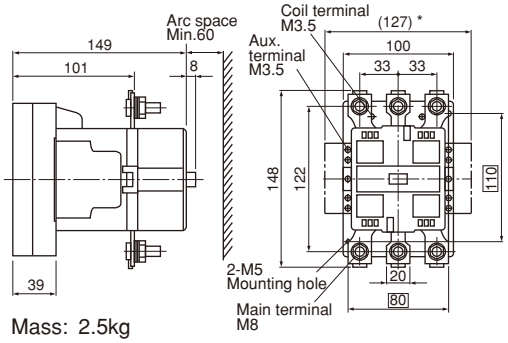

Mass: 2.5kg

SB-10N, SB-10NB

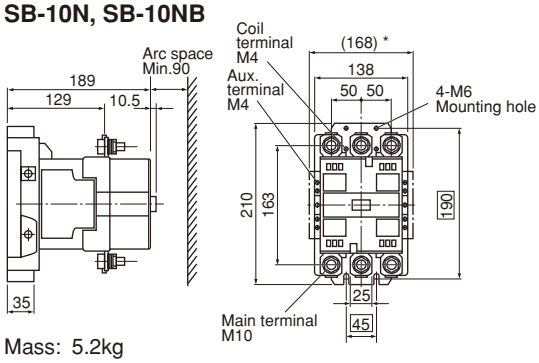

Mass: 5.2kg

SB-11N, SB-11NB

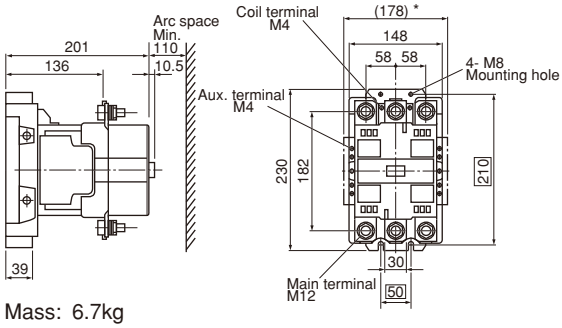

Mass: 6.7kg

Note: * For two side-mounted aux.contact blocks

■ Wiring diagrams

Main contact 2NO (SB-N2)

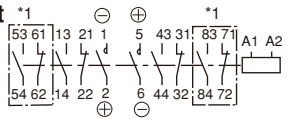

Main contact 2NC (SB-N2B)

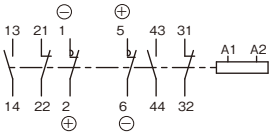

Main contact 2NO (SB-5N to 10N)

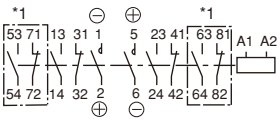

Main contact 2NO+1NC (SB-N2)

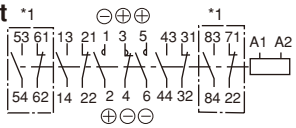

Main contact 1NO+2NC (SB-N2B)

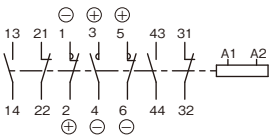

Main contact 2NO+1NC (SB-5NB to 10NB)

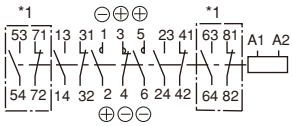

*1 In case of auxiliary contact 4NO+4NC

■ Handling notes

1. The main contacts are marked for positive and negative polarities. Do not confuse the polarities when connecting.
2. Be sure to install the contactors upright.
3. Allow adequate arcing space.

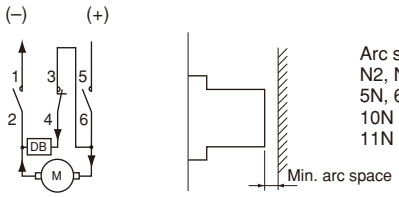

Arc space, mm

N2, N2/G, N2/SE	: 30
5N, 6N	: 60
10N	: 90
11N	: 110

■ Ordering information

Specify the following:

1. Type number or ordering code

Magnetic Contactors and Starters
FC and FW series

Magnetic contactors FC series

■ Description

FUJI FC series contactors are designed for use in consumer products and light industrial machinery and equipment. They are recommended for applications which call for economy, easy handling and reliability. Typical applications include air conditioners, show cases, industrial washing machines, heaters, pumps, fans, compressors, dryers and vending machines. They are available in sizes ranging from FC-0UL to 4UL and up to 30kW at 440 Volts AC.

■ Features

- Small size, light weight
- Budget priced
- Long service life
  Electrical life expectancy: 250,000 operations. Good for 7 years service if they are operated 100 times a day.
- Scrubbing action
  The contacts are self-cleaning by a scrubbing action during operation and are made of a silver alloy.
- Highly reliable operating coil
  Pick-up voltage
  75% of rated voltage
- Self-lifting terminals
  Easy to wire

■ Construction

FC-0UL, 0SUL

- Their small size permits them to be mounted in positions where space is limited and they can be mounted in a variety of directions.
- The standard terminals are screw-type. Printed board type and tab terminals are also available.

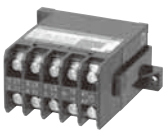

Screw type
FC-0UL 0SUL

Tab terminal type
FC-0TUL

Printed boad type
FC-0A

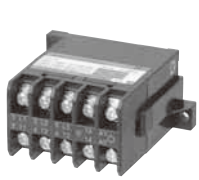

FC-0UL

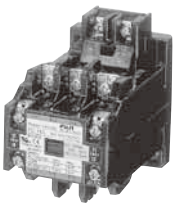

FC-1UL

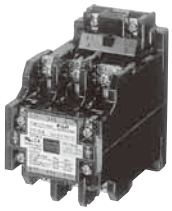

FC-3UL

- The contact section is housed inside the molded frame and is totally enclosed. The dust-tight construction keeps contact performance at a high level and results in a long trouble-free service life.

FC-1UL to 4UL

- FUJI self-lifting terminals make connection work simple.
- Their free floating design results in quiet operation and eliminates chattering and bouncing.
- The magnetic yokes have been given a rust preventing treatment.
- Coil power consumption is low.

■ Ordering information

Specify the following:
1. Ordering code
2. Operating coil voltage code
3. Auxiliary contact arrangement:
   In the case of type FC-0UL, 0A and 0TUL, specify the contact arrangement.

■ Types and ratings (IEC60947-4-1)

Motor capacity (kW) AC-3 3-phase 200V 240V	380V 440V	Operational current (A) AC-3 3-phase 200V 240V	380V 440V	Operational current (A) AC-1 *2	Auxiliary contact NO	NC	Non-reversing Open Type	Ordering code
3	2.5	12	6	20	1	–	**FC-0UL**	SF12B1A-■10
3	2.5	12	6	20	–	1	**FC-0UL**	SF12B1A-■01
3.5	4.5	15	10	20	1	–	**FC-0SUL**	SF15B1A-■10
3.5	4.5	15	10	20	–	1	**FC-0SUL**	SF15B1A-■01
5.5	5.5	20	13	30	1	1*1	**FC-1UL**	SF20B1A-■11
7.5	7.5	27	18	30	1	1*1	**FC-1SUL**	SF26B1A-■11
11	11	40	26	45	1	1*1	**FC-2SUL**	SF38B1A-■11
15	18.5	52	40	60	1	1*1	**FC-3UL**	SF50B1A-■11
18.5	30	65	65	80	1	1*1	**FC-4UL**	SF65B1A-■11
1.5	–	8	–	8	1	–	**FC-0A**	SF08BBA-■10
1.5	–	8	–	8	–	1	**FC-0A**	SF08BBA-■01
3	2.5	12	6	20	1	–	**FC-0TUL**	SF12B3A-■10
3	2.5	12	6	20	–	1	**FC-0TUL**	SF12B3A-■01
3.5	4.5	15	10	20	1	–	**FC-0STUL**	SF15B3A-■10
3.5	4.5	15	10	20	–	1	**FC-0STUL**	SF15B3A-■01
3	2.5	12	6	20	1	–	**FC-0/GUL**	SF12B1G-■10
3	2.5	12	6	20	–	1	**FC-0/GUL**	SF12B1G-■01
3.5	4.5	15	10	20	1	–	**FC-0S/GUL**	SF15B1G-■10
3.5	4.5	15	10	20	–	1	**FC-0S/GUL**	SF15B1G-■01
3	2.5	12	6	20	1	–	**FC-0T/GUL**	SF12B3G-■10
3	2.5	12	6	20	–	1	**FC-0T/GUL**	SF12B3G-■01
3.5	4.5	15	10	20	1	–	**FC-0ST/GUL**	SF15B3G-■10
3.5	4.5	15	10	20	–	1	**FC-0ST/GUL**	SF15B3G-■01
1.5	–	8	–	8	1	–	**FC-0A/G**	SF08BBG-■10
1.5	–	8	–	8	–	1	**FC-0A/G**	SF08BBG-■01

Notes: *1 Auxiliary contact arrangement 2NO or 2NC is available.
Cable connection: FC-0A: P. C. board
FC-0TUL, 0STUL: With flat connection tabs
Other types: With screw-type terminals
*2 Thermal current (A)
■: Coil voltage code, *see page A1-81*.

Fuji Electric FA Components & Systems Co., Ltd.
Information subject to change without notice

■ Ordering code system

● Contactor

SF	35	B	1	A	—	E	22
①②	③④		⑤	⑥		⑧	⑨⑩

● Starter

SF	35	B	A	A	N	—	E	22	TB	D
①②	③④		⑤	⑥	⑦		⑧	⑨⑩	⑪	⑫

① Product category

Description	Code
Contactor and starter	S

② Series category

Description	Code
F series	F

③④ Frame size

Frame size	Code	
	③	④
0, 0T	1	2
0A	0	8
0S, 0ST	1	5
1	2	0
1S	2	6
2S	3	5
3	5	0
4	6	5

⑤ Version

Description	Code
Non-reversing, open	
Contactor	
Standard	1
With tab terminal	T
Starter	
Standard	A
Non-reversing, enclosed	
Standard	C
With ON-OFF pushbutton (plastic enclosure)	P
With ON-OFF pushbutton (steel enclosure)	S
With ON-OFF pushbutton and lamp (plastic enclosure)	K

⑥ Coil specification

Description	Code
AC operating coil	A
DC operating coil	G

⑦ Type of thermal overload relay

Description	No. of element	Code
Standard	2, 3	N
Quick operating	3	S
Open-phase protection	3	E

⑧ Coil voltage

● **AC coil**

Operating coil voltage 50Hz	60Hz	Code
24V	24 — 26V	E
48V	48 — 52V	F
100V	100 — 110V	1
100 — 110V	110 — 120V	H
110 — 120V	120 — 130V	K
200V	200 — 220V	2
200 — 220V	220 — 240V	M
220 — 240V	240 — 260V	P
346 — 380V	380 — 420V	S
380 — 400V	400 — 440V	4
415 — 440V	440 — 480V	T

● **DC coil**

Operating coil voltage	Code
24V DC	E
48V DC	F
60V DC	G
100V DC	1
110V DC	H
200V DC	2
220V DC	M

⑨⑩ Auxiliary contact

Frame size 0 to 4

Contact arrangement	Code	
	⑨	⑩
1NO	1	0
1NC	0	1
2NO	2	0
1NO + 1NC	1	1
2NC	0	2

⑪ Thermal overload relay ampere setting range

Ampere setting range (A)	Code	Ampere setting range (A)	Code	Ampere setting range (A)	Code
0.1 — 0.15	TA	1.4 — 2.2	TM	7 — 11	TV
0.15 — 0.24	TC	1.7 — 2.6	TN	8 — 16	TV
0.24 — 0.36	TE	2.2 — 3.4	TP	9 — 13	TW
0.36 — 0.54	TG			12 — 18	TX
				13 — 20	TA*1
				18 — 26	TB
				20 — 26	TC*2
0.48 — 0.72	TH	2.8 — 4.2	TR	24 — 36	TE
0.64 — 0.96	TJ	4 — 6	TS	28 — 40	TF
0.8 — 1.2	TK	5 — 8	TT	34 — 50	TG
0.95 — 1.45	TL	6 — 9	TU	45 — 67	TJ

Note: *1 For FW-1S: X *2 For FW-1S: Y

⑫ No. of heater element

Description	Code
2-element	Blank
3-element	D

Magnetic Contactors and Starters
FC and FW series

■ Auxiliary contact ratings (IEC 60947-4-1)

Frame size	Rated thermal current (A)	Voltage (V AC)	Making & breaking capacity (A)	Rated operational current (A) Inductive	Rated operational current (A) Resistive
0, 0A, 0T 0S	8	110	40	4	8
		220	40	4	8
		440	20	2	8
1, 1S, 2S 3, 4	10	110	100	10	10
		220	60	6	10
		440	60	6	10

■ Performance data

Frame size	Making capacity (A)	Breaking capacity (A)	Operating cycles per hour	Life expectancy (operations) Electrical	Life expectancy (operations) Mechanical
0 to 1S	10 × Ie	10 × Ie	600	250,000	1 million
2S to 4	10 × Ie	10 × Ie	600	250,000	1 million

Ie: Rated operational current

■ Coil ratings

Frame size	Power consumption Inrush (VA)	Power consumption Sealed (VA)	Voltage and frequency *	Wiring	Operating voltage range
0, 0A, 0T, 0S	23	6	200V 50Hz	A B	0.75 to 1.1 times rated coil voltage
1, 1S	75	11			
2S	125	14			
3	125	14			
4	200	14.3			

Notes: * Other voltages between 24V and 440V AC are available.
DC operated type FC-0/G and FC-0T/G are also available.
Coil voltage: 24, 48, 60, 100, 120 , 200, 210 and 220V DC

FC-2SUL, 3UL

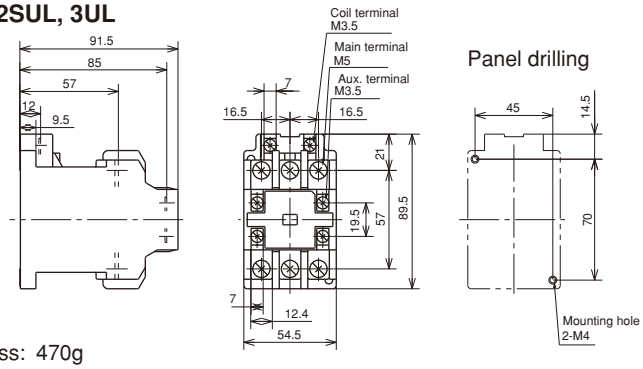

Mass: 470g

FC-4UL

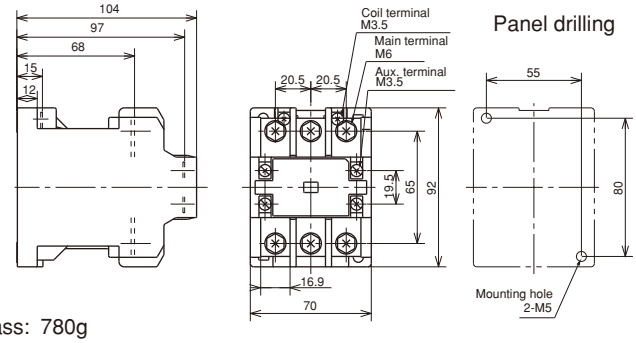

Mass: 780g

■ Dimensions, mm

FC-0UL, 0SUL

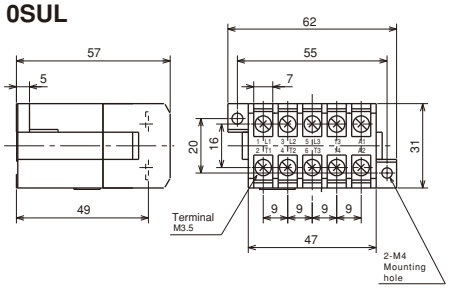

Mass: 160g

FC-0TUL, 0ST/UL

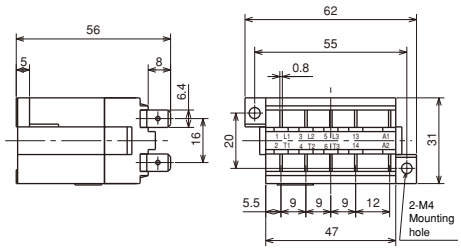

Mass: 160g

FC-0A

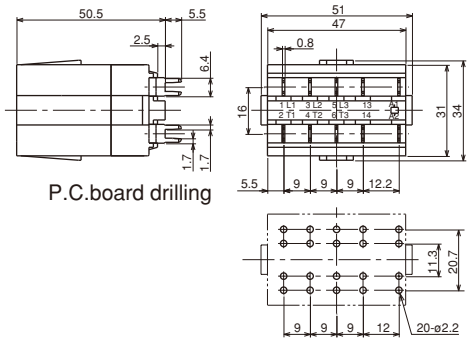

Mass: 140g

FC-1UL, 1SUL

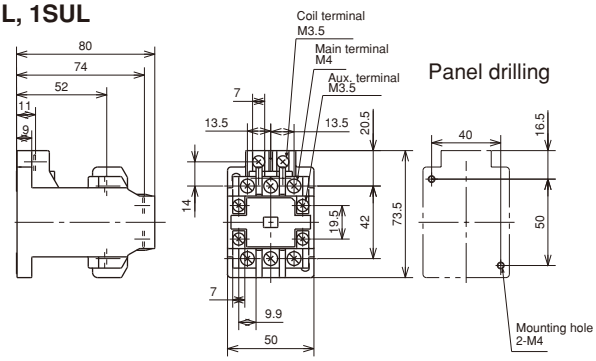

Mass: 320g

■ Wiring diagrams

FC-0UL, 0A, 0TUL, 0SUL, 0STUL

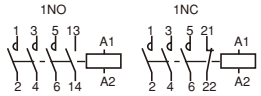

FC-1UL, 1SUL, 2SUL, 3UL, 4UL

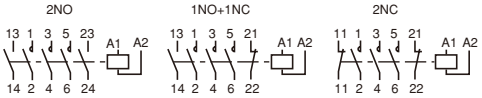

Fuji Electric FA Components & Systems Co., Ltd.
Information subject to change without notice

Non-reversing motor starters FW series

Up to 30kW 440 Volts 3-phase

■ Description

The FUJI FW-series starters are primarily designed for domestic and light industrial use, and can be expected to have a service life of over seven years under conditions where they are operated over 100 times a day.
Typical applications are air condition-ers, industrial washing machines, boiler and other pumps, fans, compressors, dryers.
The FC contactor can be supplied separately. They are simple, compact and reasonably priced, yet highly efficient and dependable. The thermal overload relay is fitted with elements that compensate for changes in ambient temperature, so stabilizing operations in spite of the season.

Note: In case of F series, contacts and operating coil cannot be replaced at site.

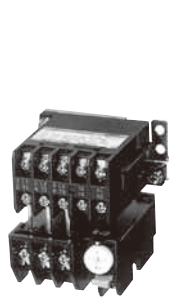
AF97-691
FW-0

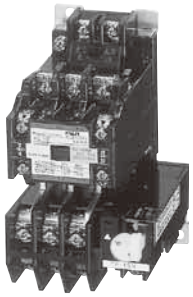
KK01-205
FW-1S

KK01-200
FW-□C

■ Ordering information

Specify the following:
1. Ordering code
2. Operating coil voltage code
3. Overload relay setting range code

■ Thermal overload relay:

See page A1-87.

■ Types and ratings

Motor capacity (kW) 3-phase 200V 240V	380V 440V	Operational current (A) 3-phase 200V 240V	380V 440V	Aux. contact NO	NC	Open 3-element Type	Ordering code	Enclosed 3-element Type	Ordering code	Combined thermal overload relay Type
3	2.5	12	6	1	–*1	**FW-0/3H**	SF12BAAN-■10T□D	**FW-0C/3H**	SF12BCAN-■10T□D	TR-0/3
3.5	4.5	15	10	1	–*1	**FW-0S/3H**	SF15BAAN-■10T□D	**FW-0SC/3H**	SF15BCAN-■10T□D	TR-0/3
5.5	5.5	20	13	1	1*2	**FW-1/3H**	SF20BAAN-■11T□D	**FW-1C/3H**	SF20BCAN-■11T□D	RCa3737-1CNF/3
7.5	7.5	27	18	1	1*2	**FW-1S/3H**	SF26BAAN-■11T□D	**FW-1SC/3H**	SF26BCAN-■11T□D	TR-1SN/3
11	11	40	26	1	1*2	**FW-2S/3H**	SF35BAAN-■11T□D	**FW-2SC/3H**	SF35BCAN-■11T□D	TR-2NF/3
15	18.5	52	40	1	1*2	**FW-3/3H**	SF50BAAN-■11T□D	**FW-3C/3H**	SF50BCAN-■11T□D	TR-2NF/3
18.5	30	65	65	1	1*2	**FW-4/3H**	SF65BAAN-■11T□D	**FW-4C/3H**	SF65BCAN-■11T□D	TR-3N/3

Notes: *1 Auxiliary contact arrangement 1NC is available.
*2 Auxiliary contact arrangement 2NO or 2NC is available.
Conforming to IEC 60947-4-1 AC-3.
■: Coil voltage code, see page A1-81.
□: Thermal overload relay ampere setting range code, *see page A1-81*.

■ Coil ratings

Frame size	Power consumption (max.) Inrush (VA)	Sealed (VA)	Voltage and frequency *
0, 0S	23	6	200V AC
1, 1S	75	11	50Hz
2S	125	14	
3	125	14	
4	200	14.3	

Notes: * Other voltages between 24V and 440V AC are available.
DC operated type FC-0/G and FC-0T/G are also available.
Coil voltage: 24, 48, 60, 100, 120 , 200, 210 and 220V DC

Wiring example

100V/100-110V
50Hz/60Hz

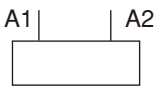

■ Performance data

Frame size	Making & breaking capacity	Operating cycles per hour	Durability (operations) Electrical	Mechanical
0, 0S, 1, 1S	10 × Ie	600	250,000	1,000,000
2S, 3, 4	10 × Ie	600	250,000	1,000,000

Ie: Rated operational current (Amps).

■ Auxiliary contact ratings

Frame size	Rated thermal current (A)	Voltage (V AC)	Making & breaking capacity (A)	Rated operational current A) Inductive (cosϕ=0.65)	Resistive (cosϕ=0.95)
0, 0S	8	200-240	40	4	8
		380-440	20	2	8
1, 1S, 2S	10	200-240	60	6	10
3, 4		380-440	60	6	10

■ Dimensions, mm

● Open type
FW-0/3H, FW-0S/3H

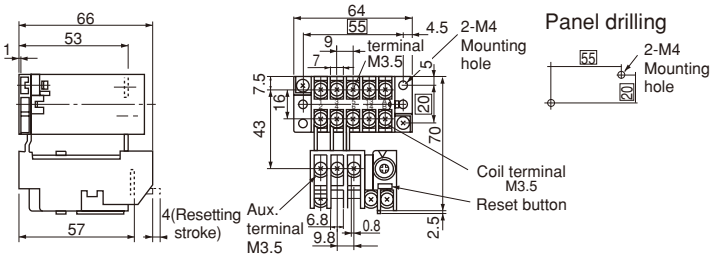

Mass: 0.29kg (with 3-thermal element)

FW-1/3H, FW-1S/3H, 2S/3H, 3/3H, 4/3H

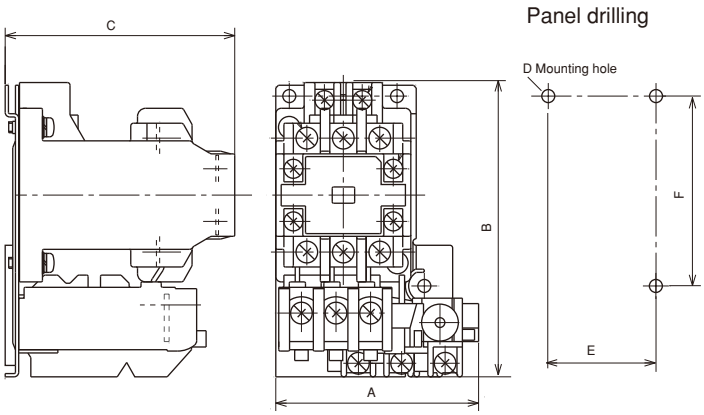

Type	A	B	C	D	E	F	Mass (kg)
FW-1/3H	75	108.5	85	2-M4	50	70	0.49
FW-1S/3H	68	121	90	2-M4	40	110	0.55
FW-2S/3H	78	138.5	91.5	2-M4	45	70	0.71
FW-3/3H	78	138.5	91.5	2-M4	45	70	0.71
FW-4/3H	90	175	109	3-M5	75	160	1.3

Mass: With 3-thermal element

Dimensions for reference only. Confirm before construction begins.

● Enclosed type
FW-0C, 0SC, 1C

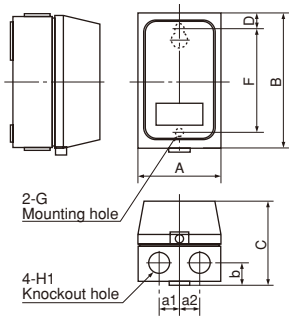

FW-1SC, 2SC, 3C, 4C

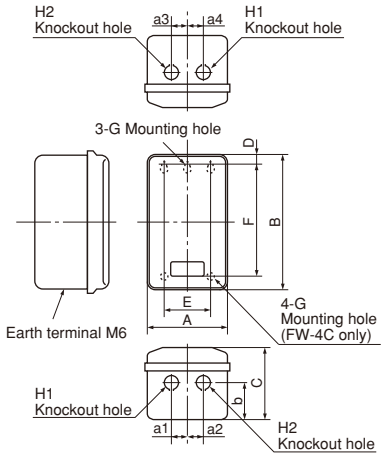

Type	A	B	C	D	E	F	G
FW-0C, 0SC*	71	120	79	15	–	90	ø5.3
FW-1C	94	166	95	15.5	–	135	ø5.5
FW-1SC	120	195	115	21.5	80	150	ø7
FW-2SC, 3C	130	230	124	20	80	190	ø7
FW-4C	175	320	145	35	110	250	ø7

Type	H1	H2	a1	a2	a3	a4	b	Mass(kg)
FW-0C, 0SC*	ø17	–	17.5	17.5	17.5	17.5	20	0.25
FW-1C	ø22	–	20	20	20	20	24	0.7
FW-1SC	ø22	ø22	22.5	22.5	20	20	35	1.5
FW-2SC, 3C	ø28	ø28	27	27	20	20	52	2
FW-4C	ø35	ø28	15	35	35	15	70	3.7

Note: * The enclosure dimensions given here are based on a "TR-0 thermal overload relay and 2-elements" being incorporated in the case. The temperature rise inside the enclosure may sometimes become a problem if a 3-element is used instead of a 2-element. In this case the FW-0P (Enclosure with pushbuttons) is recommended.

■ Wiring diagrams

FW-0/3H, 0S/3H

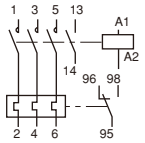

FW-1S/3H to 4/3H

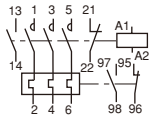

FW-1/3H

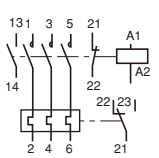

Example
FW-2S/3H

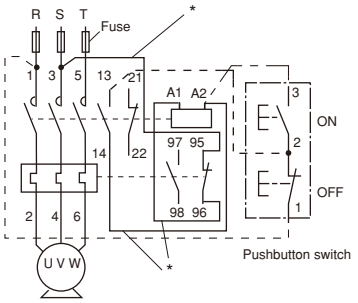

Note: * Open type: Wirings from 3 to 95 , A2 to 14 and A1 to 96 are not connected at factory. Connect the wires at site.

Thermal overload relays for FW series

Type*1 (3-element)	Setting current (3-element)*1 Range (A)	Ordering code	Range (A)	Ordering code	Reset	Contact
TR-0/3	0.24–0.36	TB13DW-E	4–6	TB13DW-S	Manual *2	SPDT
	0.48–0.72	TB13DW-H	5–8	TB13DW-T		
	0.8–1.2	TB13DW-K	6–9	TB13DW-U		
	0.95–1.45	TB13DW-L	7–11	TB13DW-V		
	1.4–2.2	TB13DW-M	9–13	TB13DW-W		
	1.7–2.6	TB13DW-N				
	2.8–4.2	TB13DW-R				
RCa3737-1CNF/3	4–8	TC20DF-S			Manual	
	8–16	TC20DF-V				
	12–18	TC20DF-X				
TR-1SN/3	13–20	TR26DW-X			Manual and auto	1NO+1NC
	20–26	TR26DW-Y				
TR-2NF/3	12–18	TR35DW-X	28–40	TR35DW-F	Manual and auto	
	18–26	TR35DW-B	34–50	TR35DW-G		
	24–36	TR35DW-E				
TR-3N/3	24–36	TR65DW-E	34–50	TR65DW-G	Manual and auto	
	28–40	TR65DW-F	45–67	TR65DW-J		

Notes: *1 2-element is also available on request.
*2 Auto reset type is available on request. Specify “Auto reset“ when ordering.

Maximum setting ranges at 380–440V AC for starter use

TR-0/3	4–6A	**TR-2N/3**	18–26A (for FW-2S/3H)
RCa3737-1CNF/3	8–16A		34–50A (for FW-3/3H)
TR-1SN/3	13–20A	**TR-3N/3**	45–67A (for FW-4/3H)

■ Characteristic curves (Cold start)

TR-0/3

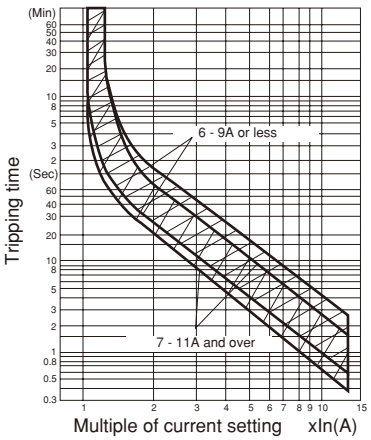

RCa3737-1CNF/3

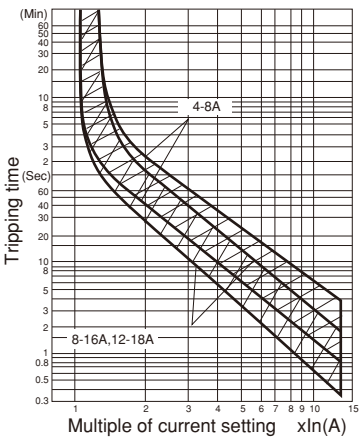

TR-1SN/3

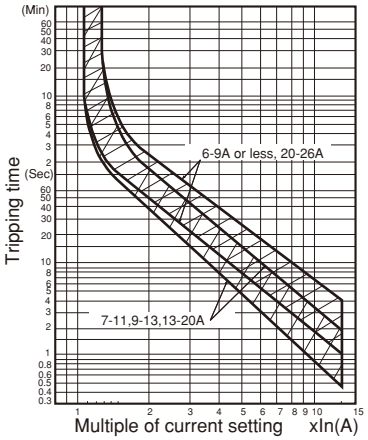

TR-2NF/3

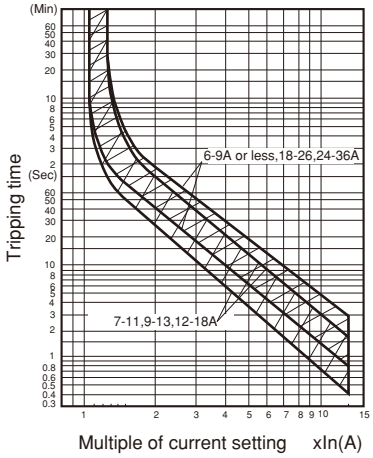

TR-3N/3

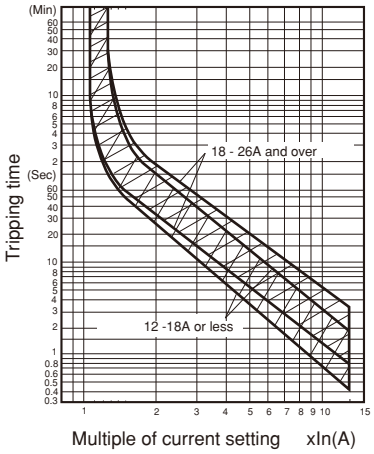

Magnetic Contactors and Starters
FW series With pushbuttons

Magnetic motor starters with pushbuttons

Up to 4.5kW 440 Volts 3-phase

■ Description

FW series magnetic motor starter is provided with square-shaped ON-OFF pushbuttons. Internal wirings are connected. The starter is housed in a plastic enclosure. The two operating buttons are color-coded; green for ON and red for OFF. Thermal overload relay is fitted with 2 or 3-element and is of manual reset type.

KK01-198

FW-0P/3H

KKD07-354

FW-1P/3H

■ Ordering information

Specify the following:
1. Ordering code
2. Operating coil voltage
3. Main circuit voltage.
4. Overload relay setting range code

See page A1-85.

■ Performance data

Same as FW series. *See page A1-83.*

■ Characteristic curves (Cold start)

See page A1-85.

■ Types and ratings

Max. motor capacity (kW) 3-phase 200-240V	380-440V	Operational current (A) 200-240V	380-440V	2-thermal element Type	Ordering code	3-thermal element Type	Ordering code
3.0	2.5	12	6	**FW-0P**	SF12BPAN-■10T□	**FW-0P/3H**	SF12BPAN-■10T□D
3.5	4.5	15	10	**FW-0SP**	SF15BPAN-■10T□	**FW-0SP/3H**	SF15BPAN-■10T□D
5.5	5.5	20	13	**FW-1P**	SF20BPAN-■11T□	**FW-1P/3H**	SF20BPAN-■11T□D
3.0	2.5	12	6	**FW-0PL**	SF12BKAN-■10T□	**FW-0PL/3H**	SF12BKAN-■10T□D
3.5	4.5	15	10	**FW-0SPL**	SF15BKAN-■10T□	**FW-0SPL/3H**	SF15BKAN-■10T□D

Notes; Auxiliary contact 1NC is available on request. (0P)
Conforming to IEC 60947-4-1 AC-3.
■: Enter the operating coil voltage code.
□: Enter the thermal overload relay ampere setting range code.

■ Thermal overload relay

Type	Setting range (A)	Contact	Starter type
TR-0 (2 or 3-element)	0.24–0.36, 0.48–0.72, 0.8–1.2, 0.95–1.45 1.4–2.2, 1.7–2.6, 2.8–4.2, 4–6, 5–8, 6–9 7–11, 9–13	SPDT 95 — 96 — 98	FW-0P, FW-0P/3H, FW-0PL, FW-0PL/3H, FW-0SP, FW-0SP/3H
TR-5-1N (2 or 3-element)	4–6, 5–8, 6–9, 7–11, 9–13, 12–18	SPDT 95 — 96 97 — 98	FW-1P, FW-1P/3H

Note: Maximum setting ranges at 440V AC for starter use:
TR-0: 4-6A, RCa3737-1CNF: 8-16A

■ Dimensions, mm

FW-0P, 0PL, 0SP, 0SPL

Plastic enclosure

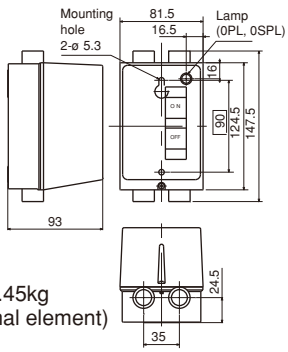

Mass: 0.45kg
(3-thermal element)

FW-1P

Plastic enclosure

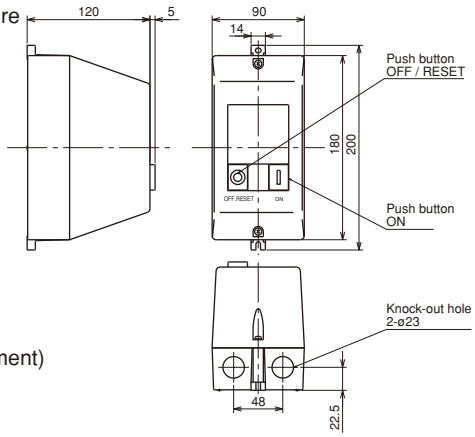

Mass: 0.92kg
(3-thermal element)

■ Wiring diagrams

FW-0P/3H, 0PL/3H, 0SP/3H, 0SPL/3H

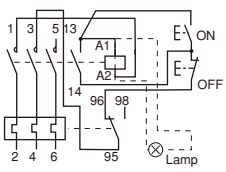

FW-1P/3H

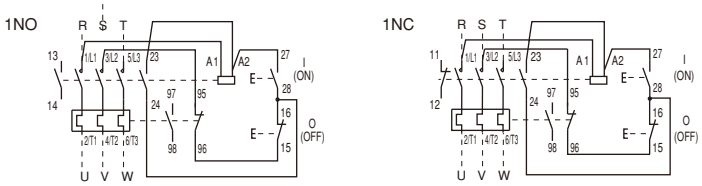

Fuji Electric FA Components & Systems Co., Ltd.
Information subject to change without notice

Standard type thermal overload relays

■ Description

• Highly reliable thermal overload relays
FUJI thermal overload relays are designed to provide overload protection to meet the thermal characteristics of low voltage induction motors.
Adjustable thermal overload relays give motors positive overcurrent protection. The starter contacts cannot be held closing under overload conditions. However, once the bimetal element has cooled, the reset button can be depressed and the motor can be restarted in the normal manner.
Ordinarily this reset is carried out manually but the starter can be changed over to 'automatic reset' by means of a screw-driver.
• FUJI thermal overload relay is subjected to stringent testing in the factory to check performance and actual values are calibrated with the markings on the adjustable dial. Consequently, they provide a positive protection.
• Relays are also provided with ambient temperature compensators, so that their performance will be maintained in spite of temperature changes. The ambient temperature is regulated for 20°C.
• The heater elements are available for either 2- or 3-pole use.

Long time operating type
In the case of loads having large inertia moments such as blowers, winders or centrifuges the starting time is extended. This will cause the standard-type thermal overload relay to operate during starting so isolating the motor.
If necessary FUJI will supply thermal relays with saturable reactors. (Time-delay type).

Quick operating type overload relays
The windings of submersible pump and compressor motors normally have a smaller overload capacity than those of standard motors, since they are generally cooled by the water and other medium being pumped. Q type overload relays will operate more quickly than the standard type in the face of a locked rotor current.

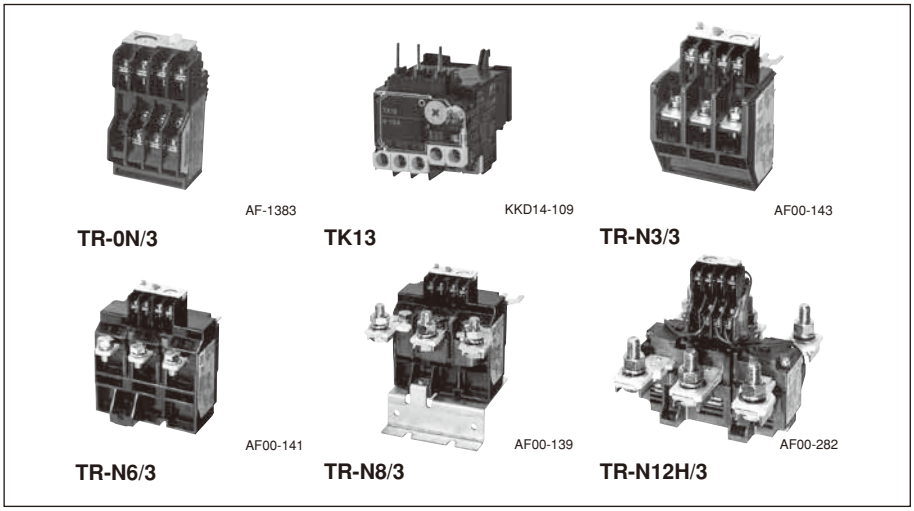

■ Features

- Isolated NO and NC contacts can be used with different potentials.
- Gold-flashed silver contact assures high contact reliability (TR-0N/3 to N14/3).
- Stable operating characteristics protect motors from burnout due to overload or locked rotor currents.
- Easy setting of current value with a calibrated dial.
- Both manual and auto reset available. A manual trip button is provided to facilitate sequence testing.
- Mechanical trip indication
- Trip-free mechanism is provided.
- Reset release button and trip indicator are optional accessories.

■ Warning

All FUJI thermal overload relays have been tested and calibrated at the factory.
They should not be tampered with or stripped down at the job site since this would affect their accuracy. A special feature of the FUJI starter series is the ease by which the relay current ratings can be varied to match the requirements of the load.
The changeover is effected by simply turning a dial to the new value required. The range of adjustment is approximately 100%–125%–150% and details are given overleaf.

■ Ordering information

Specify the following:
1. Ordering code
2. Setting range code
See page A1-88.

■ Type number nomenclature

[TR/TK-0N to N14]

TR–0N□H/3A

Basic type
TR: Standard type
TK: With phase-loss protective device

Frame size
0N to N14

Operation
Blank: Standard operation
L: Long time operation
Q: Quick operation

Reset
Blank: Manual reset
A: Auto reset

No. of heater elements
Blank: 2-element (TR)
3-element (TK, TR-Q)
3: 3-element (TR)

Mounting
Blank: On-contactor mounting
H: Separate mounting

[TK13, TK26]

TK 13 Q H A

Basic type
TK: 2E Thermal ralay with phase-loss protective device

Frame size
13, 26

Operation
Blank: Standard operation
L: Long time operation
Q: Quick operation
※ Slow operation type only manufactured for single installation

Reset
Blank: Manual reset
A: Auto reset

Mounting
Blank: On-contactor mounting
H: Separate mounting

Thermal Overload Relays
TR series

■ Ordering code system

T R 2 0 B N W — T A
① ② ③④ ⑤ ⑥ ⑦ ⑧ ⑨

① Product category

Description	Code
Thermal overload relay	T

② Series category

Description	Code
TR-N□ series	R

③④ Frame size

Frame size	Code ③	Code ④
0N	1	3
5-1N	2	0
N2	3	5
N3	6	5
N5	9	3
N6	1	C
N7	1	F
N8	1	J
N10	2	C
N12	4	A
N14	6	A

⑤ Index

Type	Code
TR-0N, 5-1N	Blank
TR-N2 to N14	B

⑥ Version

Description	No. of element	Code
Standard	2	N
	3	D
Long time operation	2	L
	3	F
Quick operation	3	S
With phase-loss	3	E

⑦ Mounting

Description	Code
On-contactor mounting	W
Separate mounting	H

⑨ Reset

Description	Code
Manual reset	Blank
Auto reaet	A

⑧ Thermal overload relay ampere setting range

Ampere setting range (A)	Code	Ampere setting range (A)	Code
0.1 — 0.15	A	9 — 13	W
0.13 — 0.2	B	12 — 18	X
0.15 — 0.24	C	16 — 22	Q
0.2 — 0.3	D	18 — 26	B
0.24 — 0.36	E	24 — 36	E
0.3 — 0.45	F	28 — 40	F
0.36 — 0.54	G	32 — 42	I
0.48 — 0.72	H	34 — 50	G
0.64 — 0.96	J		
0.8 — 1.2	K	45 — 65	J
		48 — 68	O
0.95 — 1.45	L	53 — 80	L
1.4 — 2.2	M	65 — 95	M
1.7 — 2.6	N	85 — 105	I
2.2 — 3.4	P	85 — 125	N
2.8 — 4.2	R	110 — 160	P
4 — 6	S	125 — 185	R
5 — 8	T	160 — 240	S
6 — 9	U	200 — 300	T
7 — 11	V	240 — 360	U
		300 — 450	V
		400 — 600	W

TK 13 Q H A — 009
① ② ③ ④ ⑤ ⑥

① Product category

Description	Code
2E Thermal ralay with phase-loss protective device	TK

② Frame size

Description	Code
13	13
26	26

③ Operation

Description	Code
Standard operation	Blank
Long time operation	L
Quick operation	Q

※ Slow operation type only manufactured for single installation

④ Mounting

Description	Code
On-contactor mounting	Blank
Separate mounting	H

⑤ Reset

Description	Code
Manual reset	Blank
Auto reaet	A

⑧ Thermal overload relay ampere setting range

Ampere setting range (A)	Code	Ampere setting range (A)	Code
0.1 — 0.15A	P10	2.2 — 3.4A	2P2
0.13 — 0.2A	P13	2.8 — 4.2A	2P8
0.18 — 0.27A	P18	4 — 6A	004
0.24 — 0.36A	P24	5 — 7.5A	005
0.34 — 0.52A	P34	6 — 9A	006
0.48 — 0.72A	P48	7 — 10.5A	007
0.64 — 0.96A	P64	9 — 13A	009
0.8 — 1.2A	P80	12 — 18A	012
0.95 — 1.45A	P95	16 — 22A	016
1.1 — 1.65A	1P1	20 — 26A	020
1.4 — 2.1A	1P4		
1.7 — 2.6A	1P7		

Ordering example

① Thermal overload relay ..... T
① TR-□N series ..... R
③④ Frame size: 5-1N 20
⑤ Index ..... Blank
⑥ Standard type, 3-element ..... D
⑦ On-contactor mounting ..... W
—
⑧ Ampere setting range 4-6A ..... S
⑨ Auto reset ..... A

TR20DW-SA

① Thermal overload relay ..... T
① TR-N□ series ..... R
③④ Frame size: N3 65
⑤ Index ..... B
⑥ With phase-loss protection ..... E
⑦ On-contactor mounting ..... W
—
⑧ Ampere setting range 24-36A ..... E
⑨ Manual reset ..... Blank

TR65BEW-E

Fuji Electric FA Components & Systems Co., Ltd.
Information subject to change without notice

■ Features

● Manual trip

These relays can be manually tripped for sequence inspection by pressing manual trip bar (TR-0N/3, TR-5-1N/3).
A sequence inspection will be performed when the test button is pulled out. When the test button is pressed in, only the NC contact will turn OFF. The original status will be restored when the test button is then released.(TR-N2/3 to N8/3)

● Trip-free mechanism

Even if the reset button is carelessly pressed, this relay trips without trouble (Trip-free mechanism).

● Easy visual checking of operating status

Trip indicator and manual trip bar permit visual check of tripping status.

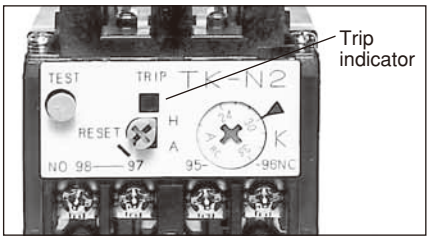

● Dial ampere setting

The setting dial uses a RC (Rated Current) marking which is set to the motor full load current.

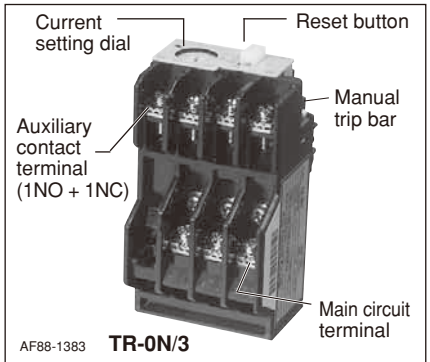

AF88-1383 **TR-0N/3**

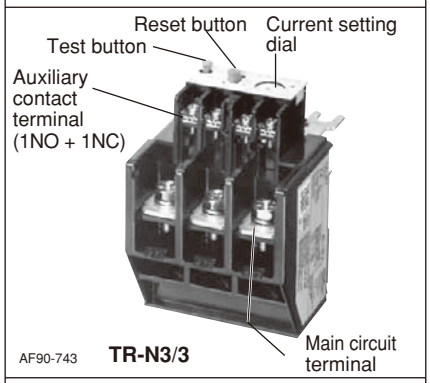

AF90-743 **TR-N3/3**

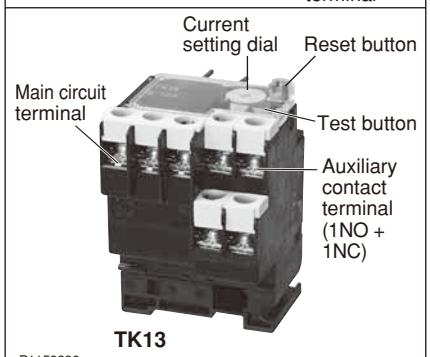

TK13

P1159280

■ Versatile optional accessories

Trip indicator

AF00-291

Reset release

AF00-585

Base unit for separate mounting

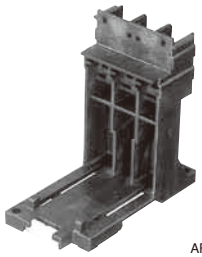

AF00-159

■ Optional accessories

Description		Type	Ordering code	Used with thermal overload relay
Reset release You can reset these relays remotely on the front panels of switchboards.	Lead length 300 mm 500 mm 700 mm	**SZ-R1** **SZ-R2** **SZ-R3**	TZ1R1 TZ1R2 TZ1R3	TR-0N/3, TR-5-1N/3, TK-0N, TK-5-1N TK13, TK26 TR-N10 to N14, TK-N10 to N14
	Lead length 300 mm 500 mm 700 mm	**SZ-R4** **SZ-R5** **SZ-R6**	TZ2R4 TZ2R5 TZ2R6	TR-N2/3 to N8/3, TK-N2 to N8
Trip indicator Easier checking of trip status	100–110V AC 50/60Hz 200–220V AC 50/60Hz	**SZ-L100** **SZ-L200**	TZ1L100 TZ1L200	TR-0N/3, TR-5-1N/3, TK-0N, TK-5-1N TR-N10 to N14, TK-N10 to N14
	100–110V AC 50/60Hz 200–220V AC 50/60Hz	**SZ-L100N2** **SZ-L200N2**	TZ2L100N2 TZ2L200N2	TR-N2/3 to N8/3, TK-N2 to N8
Dial cover For protection against the current setting being changed in error		**SZ-DA**	SZ1DA	TR-0N/3, TR-5-1N/3, TK-0N, TK-5-1N TR-N2/3 to N14/3, TK-N2 to N14
Base unit for separate mounting The unit can be screw-mounted and rail-mounted.		**SZ-HB**	TZ1HB	TR-0N/3, TK-0N
		SZ-HC	TZ1HC	TR-5-1N/3, TK-5-1N
		SZ-HD	TZ2HD	TR-N2/3, TK-N2
		SZ-HE	TZ2HE	TR-N3/3, TK-N3
		TZ1H13N	TZ1H13N	TK13
		TZ1H26N	TZ1H26N	TK26
Terminal cover		**SZ-T10**	SZ1T10	Base unit for separate mounting SZ-HB
		SZ-T11	SZ1T11	Base unit for separate mounting SZ-HC
		SZ-T14	SZ2T14	For separate mounting TR-N2H/3, TK-N2H
		SZ-T15	SZ2T15	For separate mounting TR-N3H/3, TK-N3H
		SZ-RN6T	SZ2RN6T	For separate mounting TR-N6H/3, TK-N6H
		SZ-T12	TZ1T12	TR-0N/3, TK-0N
		SZ-T13	TZ1T13	TR-5-1N/3, TK-5-1N
		SZ-T16	SZ2T16	TR-N2/3, TK-N2
		SZ-T17	SZ2T17	TR-N3/3, TK-N2

Thermal Overload Relays
TR series Standard type

■ Selection guide/Standard type

On-contactor mounting	3-element	**TR-0N/3** (TR13DW)		**TK13** (TK13)		**TR-5-1N/3** (TR20DW)		**TK26** (TK26)		**TR-N2/3** (TR35BDW)		**TR-N3/3** (TR65BDW)
	2-element	**TR-0N** (TR13NW)		–		**TR-5-1N** (TR20NW)		–		**TR-N2** (TR35BNW)		**TR-N3** (TR65BNW)
Separate mounting	3-element	**TR-0NH/3** (TR13DH)		**TK13H** (TK13H)		**TR-5-1NH/3** (TR20DH)		**TK26H** (TK26H)		**TR-N2H/3** (TR35BDH)		**TR-N3H/3** (TR65BDW)
	2-element	**TR-0NH** (TR13NH)		–		**TR-5-1NH** (TR20NH)		–		**TR-N2H** (TR35BNH)		**TR-N3H** (TR65BNW)
Contactor to be combined		SC-03	SC-0 SC-05	SC-03	SC-0 SC-05	SC-4-0	SC-4-1 SC-5-1	SC-4-0	SC-4-1 SC-5-1	SC-N1	SC-N2	SC-N2S	SC-N3
Ampere setting range (A)		0.1 – 0.15 : A	0.1 – 0.15 : A	0.1 – 0.15 : P10		0.1 – 0.15 : A	0.1 – 0.15 : A	0.1 – 0.15 : P10					
		0.13 – 0.2 : B	0.13 – 0.2 : B	0.13 – 0.2 : P13		0.13 – 0.2 : B	0.13 – 0.2 : B	0.13 – 0.2 : P13					
		0.15 – 0.24 : C	0.15 – 0.24 : C			0.15 – 0.24 : C	0.15 – 0.24 : C						
		0.2 – 0.3 : D	0.2 – 0.3 : D	0.18 – 0.27 : P18		0.2 – 0.3 : D	0.2 – 0.3 : D	0.18 – 0.27 : P18					
		0.24 – 0.36 : E	0.24 – 0.36 : E	0.24 – 0.36 : P24		0.24 – 0.36 : E	0.24 – 0.36 : E	0.24 – 0.36 : P24					
		0.3 – 0.45 : F	0.3 – 0.45 : F	0.34 – 0.52 : P34		0.3 – 0.45 : F	0.3 – 0.45 : F	0.34 – 0.52 : P34					
		0.36 – 0.54 : G	0.36 – 0.54 : G	0.48 – 0.72 : P48		0.36 – 0.54 : G	0.36 – 0.54 : G	0.48 – 0.72 : P48					
		0.48 – 0.72 : H	0.48 – 0.72 : H	0.64 – 0.96 : P64		0.48 – 0.72 : H	0.48 – 0.72 : H	0.64 – 0.96 : P64					
		0.64 – 0.96 : J	0.64 – 0.96 : J	0.8 – 1.2 : P80		0.64 – 0.96 : J	0.64 – 0.96 : J	0.8 – 1.2 : P80					
		0.8 – 1.2 : K	0.8 – 1.2 : K	0.95 – 1.45 : P95		0.8 – 1.2 : K	0.8 – 1.2 : K	0.95 – 1.45 : P95					
		0.95 – 1.45 : L	0.95 – 1.45 : L	1.1 – 1.65 : 1P1		0.95 – 1.45 : L	0.95 – 1.45 : L	1.1 – 1.65 : 1P1					
Specify the setting range code when ordering.		1.4 – 2.2 : M	1.4 – 2.2 : M	1.4 – 2.1 : 1P4		1.4 – 2.2 : M	1.4 – 2.2 : M	1.4 – 2.1 : 1P4					
		1.7 – 2.6 : N	1.7 – 2.6 : N	1.7 – 2.6 : 1P7		1.7 – 2.6 : N	1.7 – 2.6 : N	1.7 – 2.6 : 1P7					
		2.2 – 3.4 : P	2.2 – 3.4 : P	2.2 – 3.4 : 2P2		2.2 – 3.4 : P	2.2 – 3.4 : P	2.2 – 3.4 : 2P2					
		2.8 – 4.2 : R	2.8 – 4.2 : R	2.8 – 4.2 : 2P8		2.8 – 4.2 : R	2.8 – 4.2 : R	2.8 – 4.2 : 2P8					
		4 – 6 : S	4 – 6 : S	4 – 6 : 004		4 – 6 : S	4 – 6 : S	4 – 6 : 004		4 – 6 : S	4 – 6 : S		
		5 – 8 : T	5 – 8 : T	5 – 7.5 : 005		5 – 8 : T	5 – 8 : T	5 – 7.5 : 005		5 – 8 : T	5 – 8 : T		
		6 – 9 : U	6 – 9 : U	6 – 9 : 006		6 – 9 : U	6 – 9 : U	6 – 9 : 006		6 – 9 : U	6 – 9 : U		
		7 – 11 : V	7 – 11 : V	7 – 10.5 : 007		7 – 11 : V	7 – 11 : V	7 – 10.5 : 007		7 – 11 : V	7 – 11 : V	7 – 11 : V	7 – 11 : V
			9 – 13 : W	9 – 13 : 009		9 – 13 : W	9 – 13 : W	9 – 13 : 009		9 – 13 : W	9 – 13 : W	9 – 13 : W	9 – 13 : W
						12 – 18 : X	12 – 18 : X	12 – 18 : 012		12 – 18 : X	12 – 18 : X	12 – 18 : X	12 – 18 : X
							16 – 22 : Q	16 – 22 : 016					
										18 – 26 : B	18 – 26 : B	18 – 26 : B	18 – 26 : B
										24 – 36 : E	24 – 36 : E	24 – 36 : E	24 – 36 : E
												28 – 40 : F	28 – 40 : F
											32 – 42 : I		
												34 – 50 : G	34 – 50 : G
												45 – 65 : J	45 – 65 : J
													65 – 95* : M
													85 – 105* : I

On-contactor mounting	3-element	**TR-N5/3** (TR80BDW)		**TR-N6/3** (TR1CBDW)	**TR-N7/3** (TR1FBDW)	**TR-N8/3** (TR1JBDW)	**TR-N10/3** (TR2CBDW)	**TR-N12/3** (TR4ABDW)		**TR-N14/3** (TR8ABDW)
	2-element	**TR-N5** (TR80BNW)		**TR-N6** (TR1CBNW)	**TR-N7** (TR1FBNW)	**TR-N8** (TR1JBNW)	**TR-N10** (TR2CBNW)	**TR-N12** (TR4ABNW)		**TR-N14** (TR8ABNW)
Separate mounting	3-element	–		**TR-N6H/3** (TR1CBDW)	–	–	**TR-N10H/3** (TR2CBDH)	**TR-N12H/3** (TR4ABDH)		**TR-N14H/3** (TR8ABDH)
	2-element	–		**TR-N6H** (TR1CBNW)	–	–	**TR-N10H** (TR2CBNH)	**TR-N12H** (TR4ABNH)		**TR-N14H** (TR8ABNH)
Contactor to be combined		SC-N4	SC-N5A	SC-N6	SC-N7	SC-N8	SC-N10	SC-N11	SC-N12	SC-N14
Ampere setting range (A)	**Code B**	18 – 26	18 – 26							
	E	24 – 36	24 – 36							
	F	28 – 40	28 – 40							
	G	34 – 50	34 – 50							
	J	45 – 65	45 – 65	45 – 65	45 – 65					
	L	53 – 80	53 – 80	53 – 80	53 – 80					
	M		65 – 95	65 – 95	65 – 95	65 – 95				
	I		85 – 105							
	N			85 – 125	85 – 125	85 – 125	85 – 125			
	P			110 – 160*	110 – 160	110 – 160	110 – 160	110 – 160	110 – 160	
	R					125 – 185	125 – 185	125 – 185	125 – 185	
	S						160 – 240	160 – 240	160 – 240	
	T							200 – 300	200 – 300	
	U								240 – 360	240 – 360
	V								300 – 450	300 – 450
	W									400 – 600

Notes:
- TR-N10/3 to N14/3 types are provided with CTs.
- Max. setting ranges of these starters are as shown in the table on the right.
- When ordering the thermal overload relays for starter use, select the applicable setting range.

( ): Basic ordering code (When ordering phase-loss protective type, enter the version code E instead of D)

* : Separate mounting only

Motor starter	Maximum applicable heater range (A) 200–240V	380–440V
SW-03/3H	7–11 (7-10.5)	6–9
SW-4-0/3H	12–18	12–18
SW-N1/3H	24–36	24–36
SW-N2S/3H	34–50	34–50
SW-N4/3H	53–80	53–80
SW-N6/3H	85–125	85–125

( ): in case of TK13 type

Fuji Electric FA Components & Systems Co., Ltd.
Information subject to change without notice

■ Selection guide/Long time operating type

On-contactor mounting	3-element	–		–		–		–		**TR-N2L/3** (TR35BFW)		**TR-N3L/3** (TR65BFW)	
	2-element	–		–		–		–		**TR-N2L** (TR35BLW)		**TR-N3L** (TR65BLW)	
Separate mounting	3-element	**TR-0NLH/3** (TR13FH)		**TK13LH** (TK13LH)		**TR-5-1NLH/3** (TR20FH)		**TK26LH** (TK26LH)		**TR-N2LH/3** (TR35BFH)		**TR-N3LH/3** (TR65BFH)	
	2-element	**TR-0NLH** (TR13LH)		–		**TR-5-1NLH** (TR20LH)		–		**TR-N2LH** (TR35BLH)		**TR-N3LH** (TR65BLH)	
Contactor to be combined		SC-03	SC-0 SC-05	SC-03	SC-0 SC-05	SC-4-0	SC-4-1 SC-5-1	SC-4-0	SC-4-1 SC-5-1	SC-N1	SC-N2	SC-N2S	SC-N3
Ampere setting range (A)				0.24 – 0.36 : P24				0.24 – 0.36 : P24					
				0.34 – 0.52 : P34				0.34 – 0.52 : P34					
				0.48 – 0.72 : P48				0.48 – 0.72 : P48					
				0.64 – 0.96 : P64				0.64 – 0.96 : P64					
				0.8 – 1.2 : P80				0.8 – 1.2 : P80					
		0.95 – 1.45 : L	0.95 – 1.45 : L	0.95 – 1.45 : P95		0.95 – 1.45 : L	0.95 – 1.45 : L	0.95 – 1.45 : P95					
				1.1 – 1.65 : 1P1				1.1 – 1.65 : 1P1					
		1.4 – 2.2 : M	1.4 – 2.2 : M	1.4 – 2.1 : 1P4		1.4 – 2.2 : M	1.4 – 2.2 : M	1.4 – 2.1 : 1P4					
		1.7 – 2.6 : N	1.7 – 2.6 : N	1.7 – 2.6 : 1P7		1.7 – 2.6 : N	1.7 – 2.6 : N	1.7 – 2.6 : 1P7					
		2.2 – 3.4 : P	2.2 – 3.4 : P	2.2 – 3.4 : 2P2		2.2 – 3.4 : P	2.2 – 3.4 : P	2.2 – 3.4 : 2P2					
		2.8 – 4.2 : R	2.8 – 4.2 : R	2.8 – 4.2 : 2P8		2.8 – 4.2 : R	2.8 – 4.2 : R	2.8 – 4.2 : 2P8					
		4 – 6 : S	4 – 6 : S	4 – 6 : 004		4 – 6 : S	4 – 6 : S	4 – 6 : 004		4 – 6 : S	4 – 6 : S		
		5 – 8 : T	5 – 8 : T	5 – 7.5 : 005		5 – 8 : T	5 – 8 : T	5 – 7.5 : 005		5 – 8 : T	5 – 8 : T		
		6 – 9 : U	6 – 9 : U	6 – 9 : 006		6 – 9 : U	6 – 9 : U	6 – 9 : 006		6 – 9 : U	6 – 9 : U		
		7 – 11 : V	7 – 11 : V	7 – 10.5 : 007		7 – 11 : V	7 – 11 : V	7 – 10.5 : 007		7 – 11 : V	7 – 11 : V	7 – 11 : V	7 – 11 : V
			9 – 13 : W	9 – 13 : 009		9 – 13 : W	9 – 13 : W	9 – 13 : 009		9 – 13 : W	9 – 13 : W	9 – 13 : W	9 – 13 : W
						12 – 18 : X	12 – 18 : X	12 – 18 : 012		12 – 18 : X	12 – 18 : X	12 – 18 : X	12 – 18 : X
										18 – 26 : B	18 – 26 : B	18 – 26 : B	18 – 26 : B
											24 – 36 : E	24 – 36 : E	24 – 36 : E
												28 – 40 : F	28 – 40 : F
												34 – 50 : G	34 – 50 : G
													45 – 65 : J
													53 – 80* : L
													65 – 95* : M

On-contactor mounting	3-element	**TR-N5L/3** (TR80BFW)		**TR-N6L/3** (TR1CBFW)	**TR-N7L/3** (TR1FBFW)	**TR-N10L/3** (TR2CBFW)		**TR-N12L/3** (TR4ABFW)		**TR-N14L/3** (TR8ABFW)
	2-element	**TR-N5L** (TR80BLW)		**TR-N6L** (TR1CBLW)	**TR-N7L** (TR1FBLW)	**TR-N10L** (TR2CBLW)		**TR-N12L** (TR4ABLW)		**TR-N14L** (TR8ABLW)
Separate mounting	3-element	–		**TR-N6LH/3** (TR1CBFH)	–	**TR-N10LH/3** (TR2CBFH)		**TR-N12LH/3** (TR4ABFH)		**TR-N14LH/3** (TR8ABFH)
	2-element	–		**TR-N6LH** (TR1CBLH)	–	**TR-N10LH** (TR2CBLH)		**TR-N12LH** (TR4ABLH)		**TR-N14LH** (TR8ABLH)
Contactor to be combined		SC-N4	SC-N5A	SC-N6	SC-N7	SC-N8	SC-N10	SC-N11	SC-N12	SC-N14
Ampere setting range (A)	**Code B**	18 – 26	18 – 26							
	E	24 – 36	24 – 36							
	F	28 – 40	28 – 40							
	G	34 – 50	34 – 50							
	J	45 – 65	45 – 65	45 – 65	45 – 65					
	L	53 – 80	53 – 80	53 – 80	53 – 80					
Specify the setting range code when ordering.	**M**		65 – 95	65 – 95	65 – 95					
	N			85 – 125	85 – 125	85 – 125	85 – 125			
	P			110 – 160*	110 – 160	110 – 160	110 – 160	110 – 160	110 – 160	
	R					125 – 185	125 – 185	125 – 185	125 – 185	
	S						160 – 240	160 – 240	160 – 240	
	T							200 – 300	200 – 300	
	U								240 – 360	240 – 360
	V								300 – 450	300 – 450
	W									400 – 600
	W									400 – 600

Notes: Maximum setting ranges of the these starters are as shown in the table below.
Select the applicable setting range when ordering the thermal overload relays for starter use.

( ): Basic ordering code
* : Separate mounting only

Motor starter	Maximum applicable heater range (A) 200–240V	380–440V
SW-03/2L, 3L	7–11 (7-10.5)	6–9
SW-N2S/2L, 3L	34–50	34–50
SW-N4/2L, 3L	53–80	53–80
SW-N6/2L, 3L	85–125	85–125

( ): in case of TK13 type

Thermal Overload Relays
TR series Quick operating type

■ Selection guide/Quick operating type

On-contactor mounting	3-element	**TR-0NQ** (TR13SW)		**TK13Q** (TK13Q)		**TR-5-1NQ** (TR20SW)		**TK26Q** (TK26Q)		**TR-N2Q** (TR35BSW)	
Separate mounting	3-element	–		**TK13QH** (TK13QH)		–		**TK26QH** (TK26QH)		–	
Contactor to be combined		SC-03	SC-0 SC-05	SC-03	SC-0 SC-05	SC-4-0	SC-4-1 SC-5-1	SC-4-0	SC-4-1 SC-5-1	SC-N2S	SC-N3
Rated operational current (A)	200–240V	11	13	11	13	18	22	18	22	27	39
	380–440V	9	12	9	12	16	22	16	22	30	37
Ampere setting range (A)		1.4 – 2.2 : M	1.4 – 2.2 : M	1.4 – 2.1 : 1P4		1.4 – 2.2 : M	1.4 – 2.2 : M	1.1 – 1.65: 1P1			
		1.7 – 2.6 : N	1.7 – 2.6 : N	1.7 – 2.6 : 1P7		1.7 – 2.6 : N	1.7 – 2.6 : N	1.4 – 2.1 : 1P4			
		2.2 – 3.4 : P	2.2 – 3.4 : P	2.2 – 3.4 : 2P2		2.2 – 3.4 : P	2.2 – 3.4 : P	1.7 – 2.6 : 1P7			
		2.8 – 4.2 : R	2.8 – 4.2 : R	2.8 – 4.2 : 2P8		2.8 – 4.2 : R	2.8 – 4.2 : R	2.2 – 3.4 : 2P2			
		4 – 6 : S	4 – 6 : S	4 – 6 : 004		4 – 6 : S	4 – 6 : S	2.8 – 4.2 : 2P8			
		5 – 8 : T	5 – 8 : T	5 – 7.5 : 005		5 – 8 : T	5 – 8 : T	4 – 6 : 004			
		6 – 9 : U	6 – 9 : U	6 – 9 : 006		6 – 9 : U	6 – 9 : U	5 – 7.5 : 005			
Specify the setting range code when ordering.		7 – 11 *1 : V	7 – 11 *1 : V	7 – 10.5: 007		7 – 11 *1 : V	7 – 11 *1 : V	6 – 9 : 006			
			9 – 13 *1 : W	9 – 13 : 009		9 – 13 *1 : W	9 – 13 *1 : W	7 – 10.5: 007			
						12 – 18 *1 : X	12 – 18 *1 : X	9 – 13 : 009		12 – 18 : X	12 – 18 : X
								12 – 18 : 012		18 – 26 : B	18 – 26 : B
											24 – 36 : E

On-contactor mounting	3-element	**TR-N3Q** (TR65BSW)		**TR-N5Q** (TR80SW)	
Separate mounting	3-element	**TR-N3Q** (TR65BSW)		–	
Contactor to be combined		SC-N2S	SC-N3	SC-N4	SC-N5A
Rated operational current (A)	200–240V	52	52	52	105
	380–440V	48	48	48	105
Ampere setting range (A)	**Code** **B**	18–26	18–26	18–26	18–26
	E	24–36	24–36	24–36	24–36
	F	28–40	28–40	28–40	28–40
	G	34–50	34–50	34–50	34–50
Specify the setting range code when ordering.	**J**		45–65	45–65	45–65
	L		53–80*2	53–80	53–80
	M		65–95*2		65–95

Notes: *1 Thermal overload relay with phase-loss protection is available with *1 marked setting ranges of TR-0NQ, TR-5-1NQ and all setting ranges of TR-N2Q to N5Q.
Type numbers are TK-0NQ, TK-5-1NQ, TK-N2Q to N5Q. The setting ranges of these TK-□Q type relays are as same as those of the above setting ranges.
*2 Separate mounting only.
( ) Basic ordering code

■ Ratings of auxiliary contact

Type	Rated thermal current (A)	Rated voltage (V)	Rated AC operational current (A)	Rated DC operational current (A)
TR-0N, 5-1N TR-0N/3, 5-1N/3 TK-0N, 5-1N TR-0NQ, 5-1NQ	3	24 100-120 200-240 380-440 500-600	3 (0.3)* 2.5 (0.3)* 2 (0.3)* 1 (0.3)* 0.6 (0.3)*	1.1 (0.3)* 0.28 0.14 – –
TR-N2 to N8 TR-N2/3 to N8/3 TK-N2 to N8 TR-N2Q to N5Q TK13, TK26 TK13Q, TK26Q	5	24 100-120 200-240 380-440 500-600	3 (0.5)* 2.5 (0.5)* 2 (0.5)* 1 (0.5)* 0.6 (0.5)*	1.1(0.3)* 0.28 0.14 – –
TR-N10 to N14 TR-N10/3 to N14/3 TK-N10 to N14	5	24 100-120 200-240 380-440 500-600	3 (0.3)* 2.5 (0.3)* 2 (0.3)* 1 (0.3)* 0.6 (0.3)*	1.1(0.3)* 0.28 0.14 – –

Notes: Conforming to Class AC-15, DC-13, IEC, JIS, and JEM.
( )* NO contact of auto reset type.

Fuji Electric FA Components & Systems Co., Ltd.
Information subject to change without notice

■ Dimensions, mm

Standard and quick operating types

TR-0N/3, TR-0NQ

On-contactor mounting

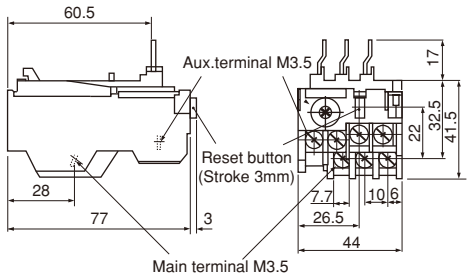

TR-5-1NH/3

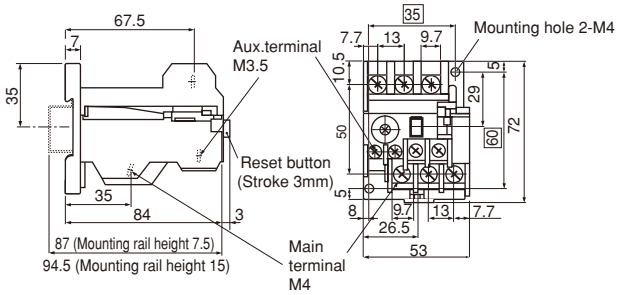

TR-0NH/3

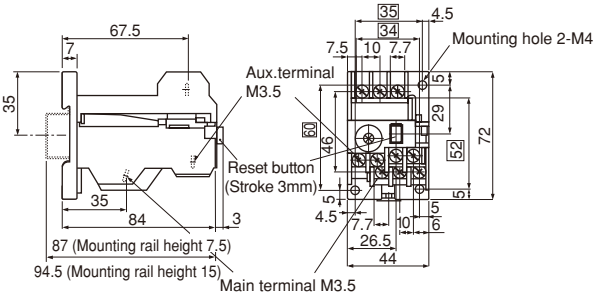

TK26, TK26Q

On-contactor mounting

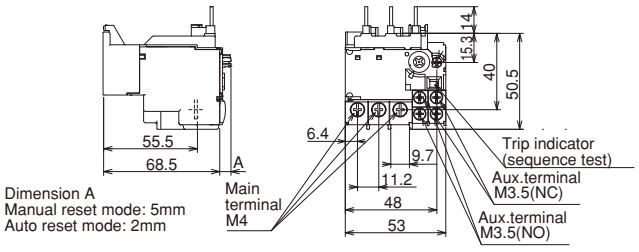

TK13, TK13Q

On-contactor mounting

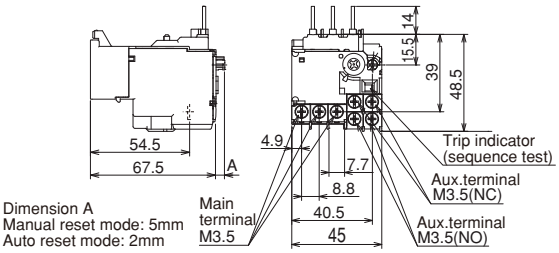

TK26H, TK26HQ

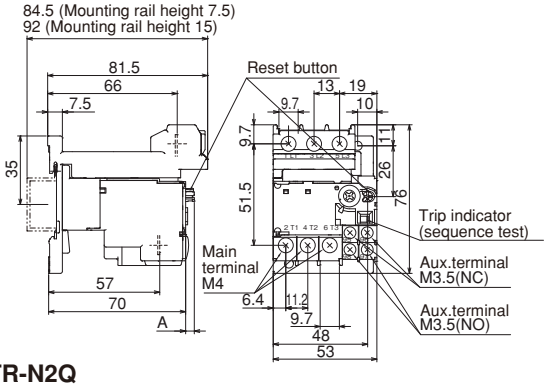

TK13H, TK13HQ

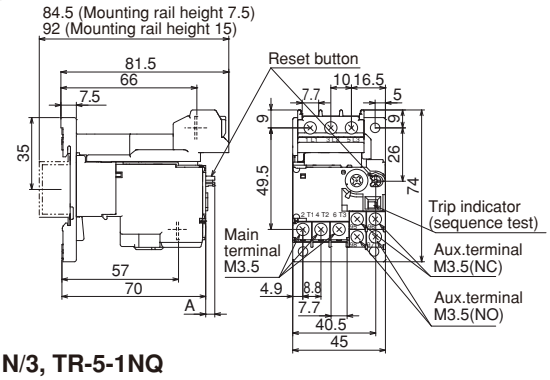

TR-N2/3, TR-N2Q

On-contactor mounting

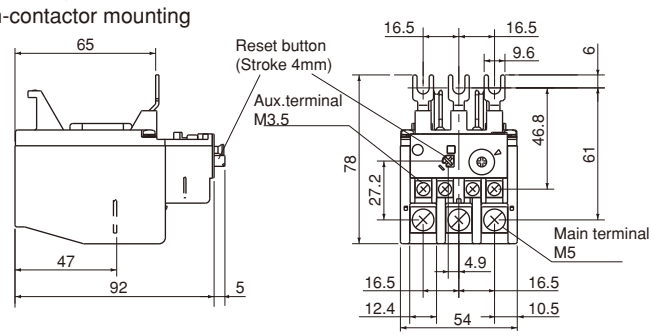

TR-5-1N/3, TR-5-1NQ

On-contactor mounting

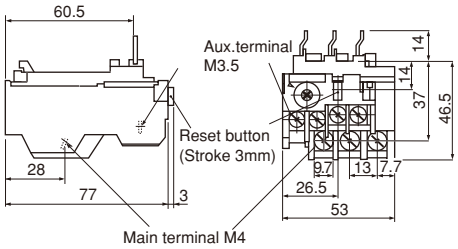

TR-N2H/3

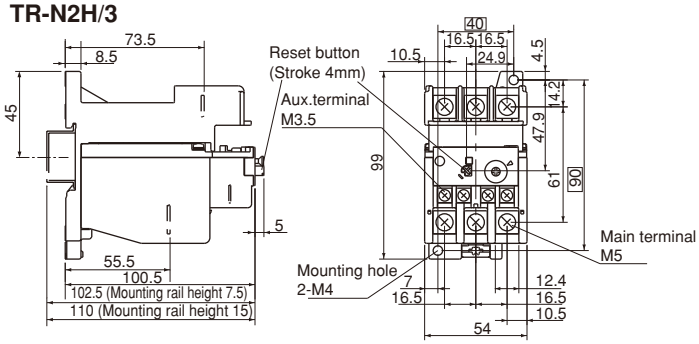

☐ : Mounting pitch

Mass: *See page A1-96.*

■ Dimensions, mm

Standard and quick operating types

TR-N3/3, TR-N3Q
On-contactor mounting

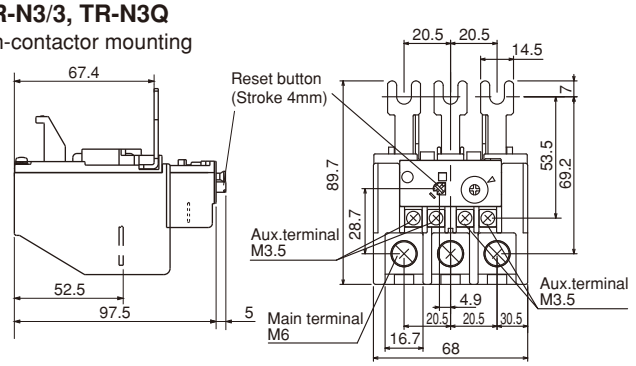

TR-N7/3
On-contactor mounting

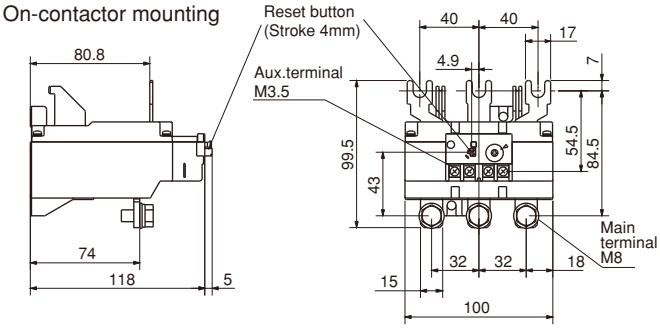

TR-N3H/3

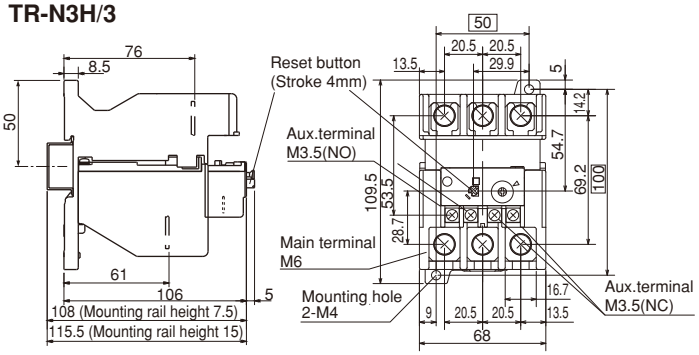

TR-N8/3
On-contactor mounting

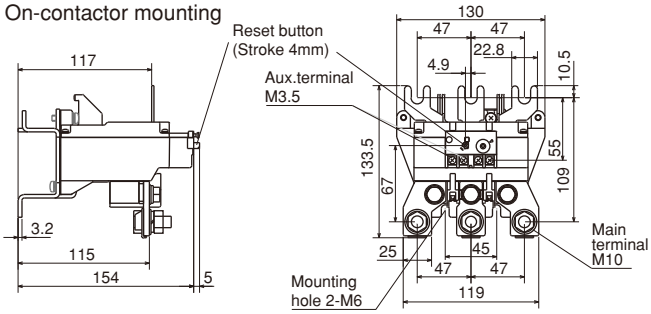

TR-N5/3, TR-N5Q
On-contactor mounting

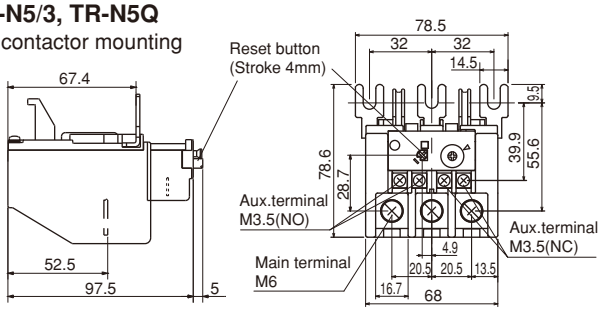

TR-N10/3
On-contactor mounting

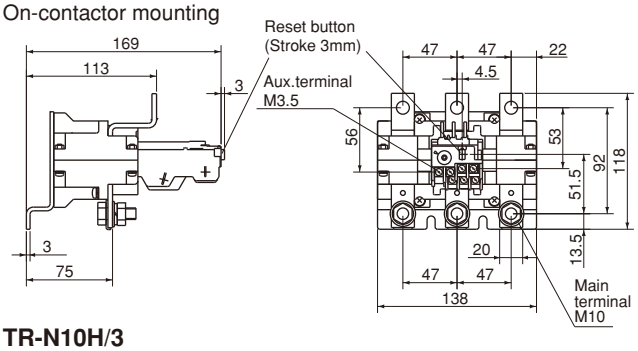

TR-6N/3
On-contactor mounting

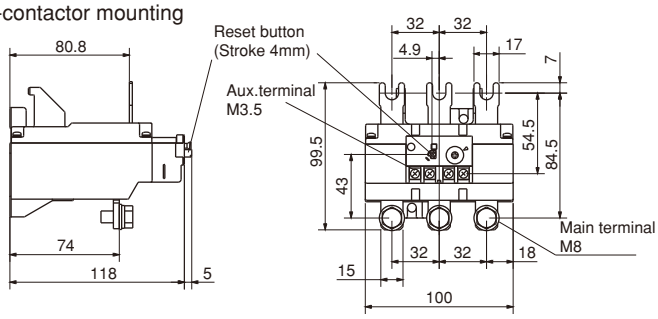

TR-N10H/3

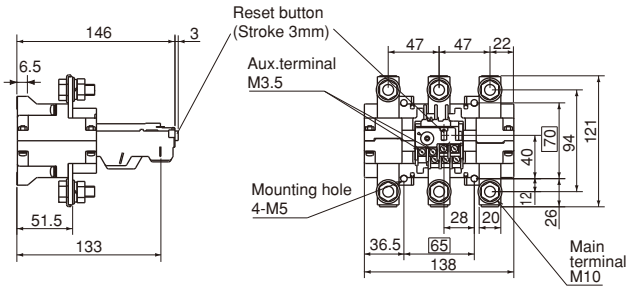

TR-N6H/3

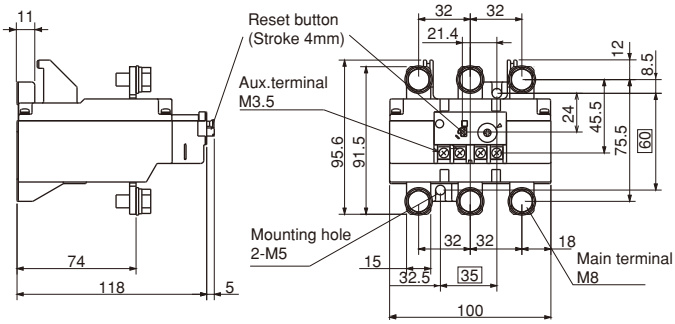

TR-N12/3
On-contactor mounting

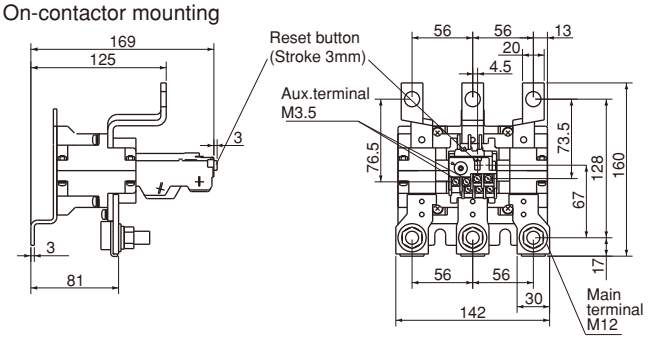

Mass: *See page A1-96.*

■ Dimensions, mm

Standard and quick operating types

TR-N12H/3

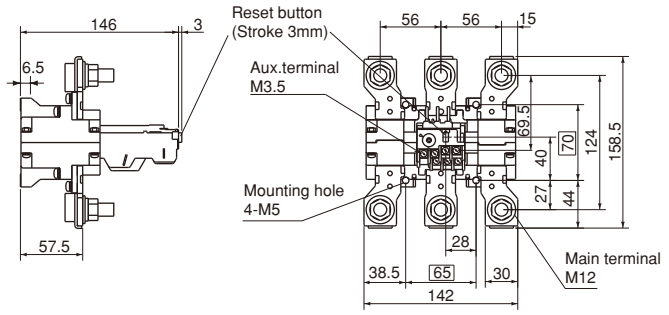

TR-N14H/3

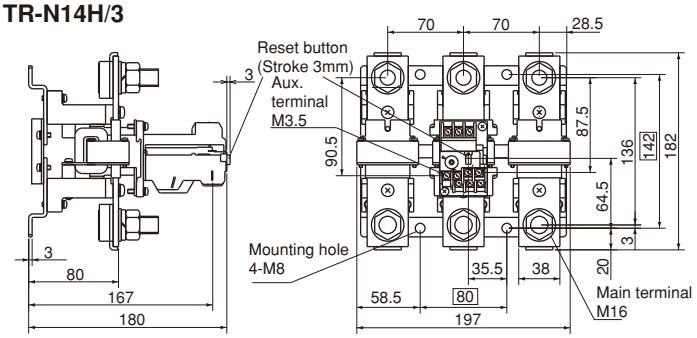

TR-N14/3

On-contactor mounting

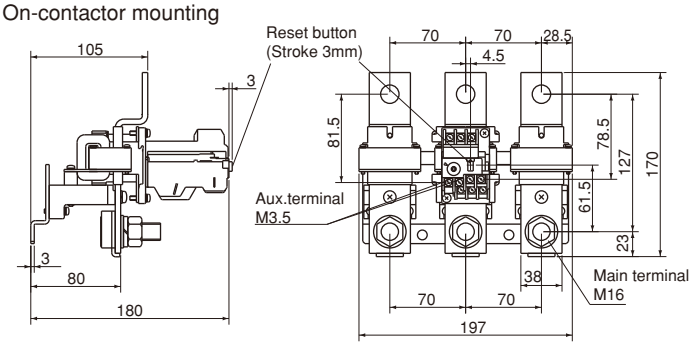

■ Dimensions, mm

Base unit for separate mounting

SZ-HB

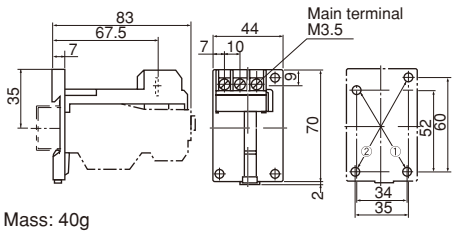

Mass: 40g

SZ-HE

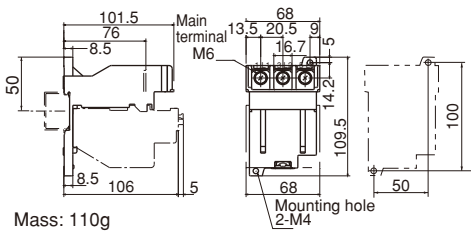

Mass: 110g

SZ-HC

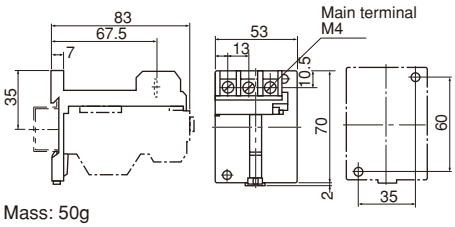

Mass: 50g

TZ1H13N

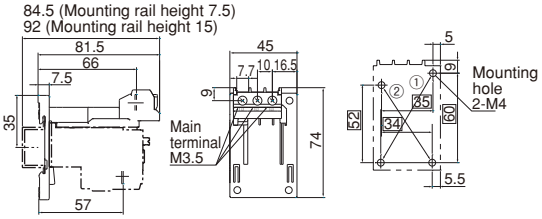

Mass: 30g

SZ-HD

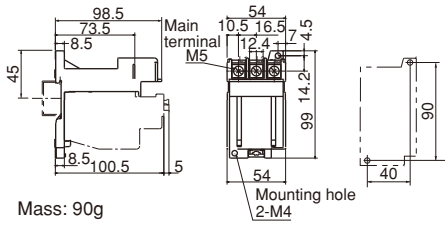

Mass: 90g

TZ1H26N

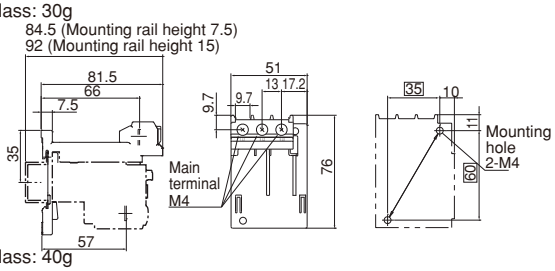

Mass: 40g

Mass: *See page A1-96.*

■ Mass/Standard and quick operating types

On-contactor mounting		Separate mounting		On-contactor mounting		Separate mounting	
Type	Mass	Type	Mass	Type	Mass	Type	Mass
TR-0N	0.09kg	**TR-0NH**	0.13kg	**TR-N7**	0.61kg	–	
TR-0N/3	0.10kg	**TR-0NH/3**	0.14kg	**TR-N7/3**	0.61kg		
TR-0NQ	0.10kg						
TK13	0.11kg	**TK13H**	0.13kg				
TK13Q	0.11kg	**TK13QH**	0.13kg				
TR-5-1N	0.11kg	**TR-5-1NH**	0.16kg	**TR-N8**	1.2kg	–	
TR-5-1N/3	0.12kg	**TR-5-1NH/3**	0.17kg	**TR-N8/3**	1.2kg		
TR-5-1NQ	0.12kg						
TK26	0.11kg	**TK26H**	0.15kg				
TK26Q	0.11kg	**TK26QH**	0.15kg				
TR-N2, N2/3	0.2kg	**TR-N2H**	0.29kg	**TR-N10**	1.85kg	**TR-10NH**	1.5kg
TR-N2Q	0.2kg	**TR-N2H/3**	0.29kg	**TR-N10/3**	1.85kg	**TR-10NH/3**	1.5kg
TR-N3, N3/3	0.27kg	**TR-N3H, N3H/3**	0.38kg	**TR-N12, N12/3**	2.3kg	**TR-12NH, 12NH/3**	2.25kg
TR-N3Q	0.27kg						
TR-N5, N5/3	0.27kg	–		**TR-N14, N14/3**	3.5kg	**TR-14NH, 14NH/3**	4kg
TR-N5Q	0.27kg						
TR-N6, N6/3	0.61kg	**TR-N6H, N6H/3**	0.67kg	–		–	

■ Dimensions, mm

Long time operating type

TR-0NLH, 0NLH/3

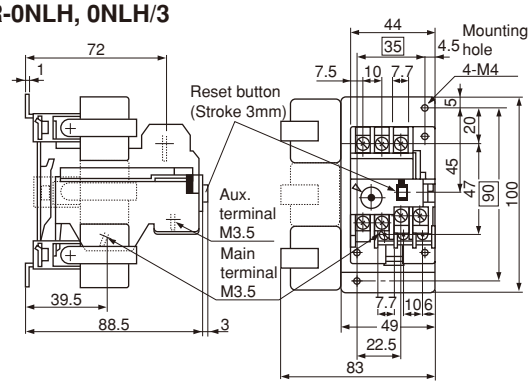

TK26LH

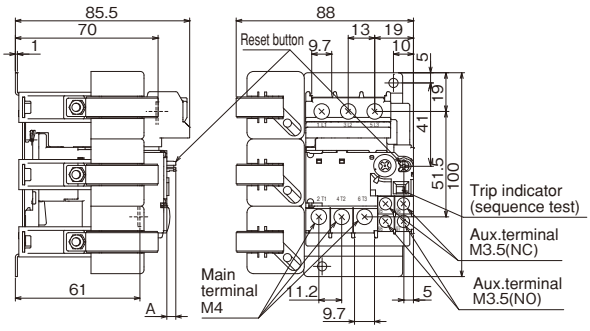

TK13LH

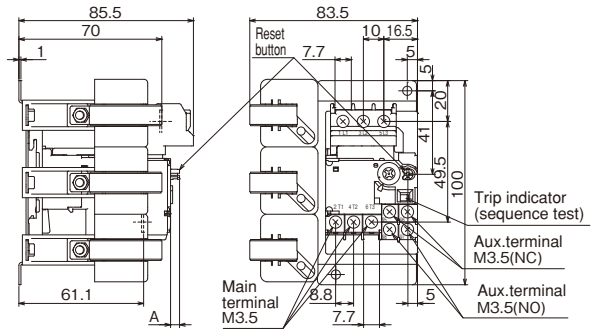

TR-N2L, N2L/3

On-contactor mounting

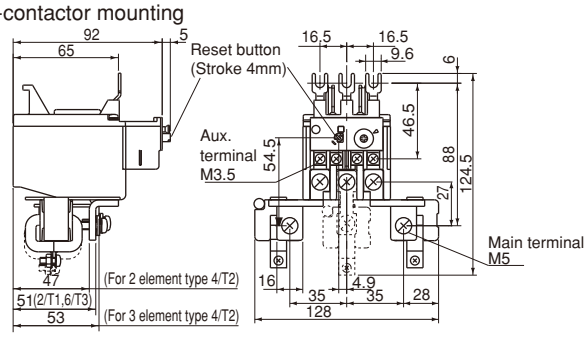

TR-5-1NLH, 5-1NLH/3

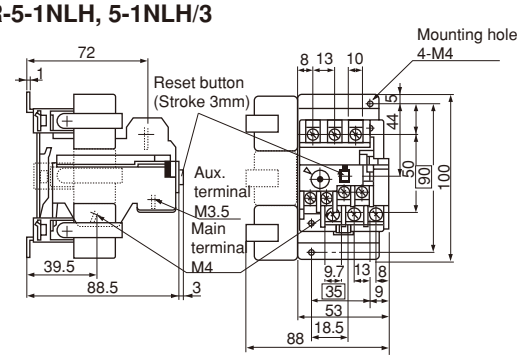

TR-N2LH, N2LH/3

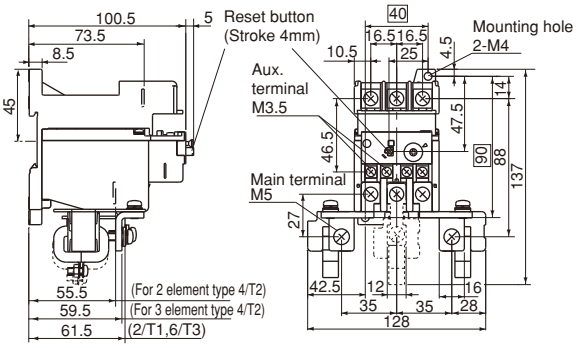

□ : Mounting pitch

Mass: *See page A1-97.*

Information subject to change without notice

■ Dimensions, mm

Long time operating type
TR-N3L, N3L/3

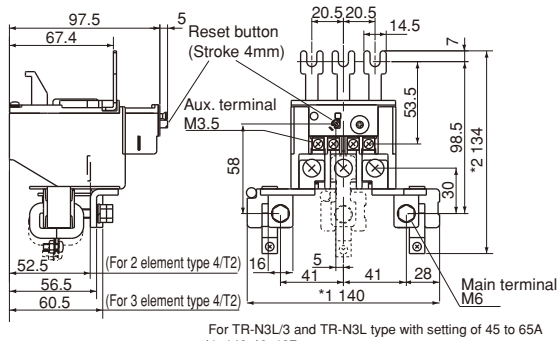

For TR-N3L/3 and TR-N3L type with setting of 45 to 65A
*1: 149, *2: 137

TR-N6L, N6L/3
On-contactor mounting

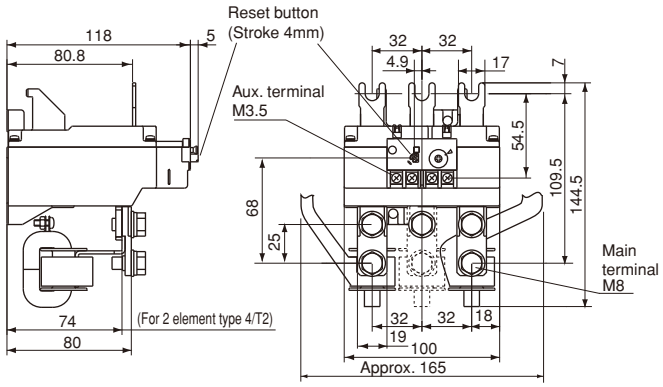

TR-N3LH, N3LH/3
On-contactor mounting

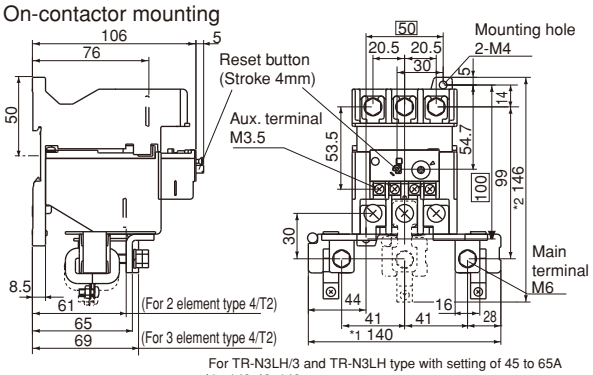

For TR-N3LH/3 and TR-N3LH type with setting of 45 to 65A
*1: :149, *2: 149

TR-N6LH, N6LH/3

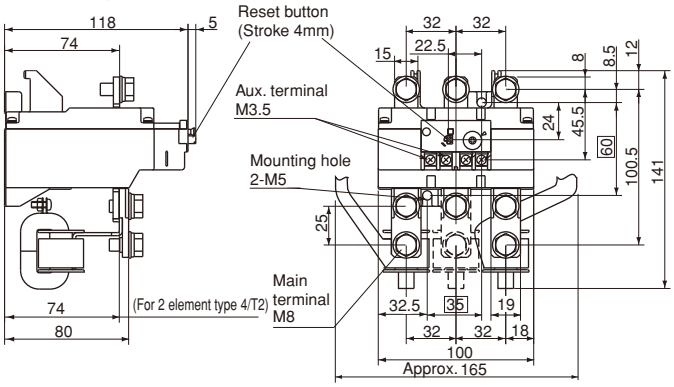

TR-N5L, N5LH/3
On-contactor mounting

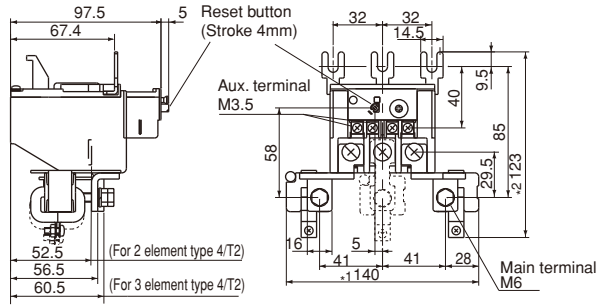

For TR-N3LH/3 and TR-N3LH type with setting of 45 to 65A
*1: 149, *2: 126

TR-N7L, N7L/3
On-contactor mounting

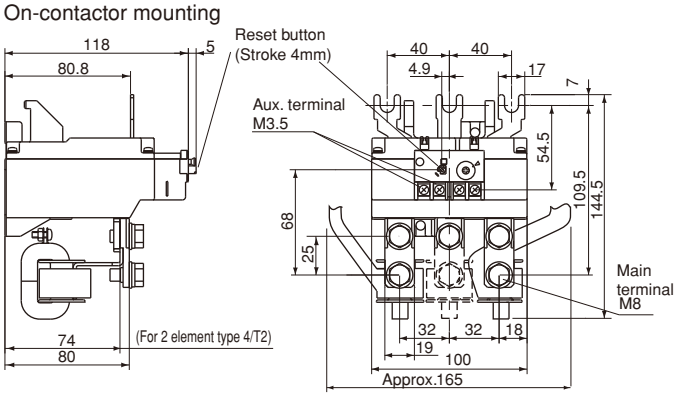

Note: TR-N10L, N10LH, N12NL, N12LH, N14L and N14LH types have the same dimensions as standard types. *See pages A1-94, 95.*

■ Mass/Standard and quick operating types

On-contactor mounting		Separate mounting		On-contactor mounting		Separate mounting	
Type	Mass	Type	Mass	Type	Mass	Type	Mass
–		**TR-0NLH**	0.4kg	**TR-N6L**	1.54kg	**TR-N6LH**	1.6kg
		TR-0NLH/3	0.5kg	**TR-N6L/3**	1.85kg	**TR-N6LH/3**	1.91kg
		TK13LH	0.42kg				
–		**TR-5-1NLH**	0.42kg	**TR-N7L**	1.54kg	–	
		TR-5-1NLH/3	0.52kg	**TR-N7L/3**	1.85kg		
		TK26LH	0.45kg				
TR-N2L	0.56kg	**TR-N2LH**	0.65kg	**TR-N7L**	1.85kg	**TR-N10LH**	1.5kg
TR-N2L/3	0.68kg	**TR-N2LH/3**	0.77kg	**TR-N7L/3**	1.85kg	**TR-N10LH/3**	1.5kg
TR-N3L	0.63kg	**TR-N3LH**	0.74kg	**TR-N12L**	2.3kg	**TR-N12LH**	2.25kg
TR-N3L/3	0.77kg	**TR-N3LH/3**	0.74kg	**TR-N12L/3**	2.3kg	**TR-N12LH/3**	1.5kg
TR-N5L	0.63kg	–		**TR-N14L**	3.5kg	**TR-N14LH**	4kg
TR-N5L/3	0.63kg			**TR-N14L/3**	3.5kg	**TR-N14LH/3**	4kg

Thermal Overload Relays
TR series

■ Dimensions, mm

Optional accessories
Trip indicator

SZ-L100
SZ-L200

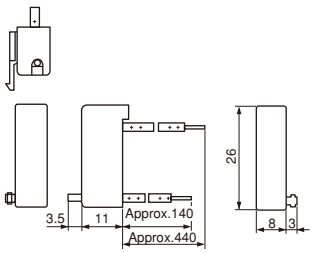

SZ-L100N2
SZ-L200N2

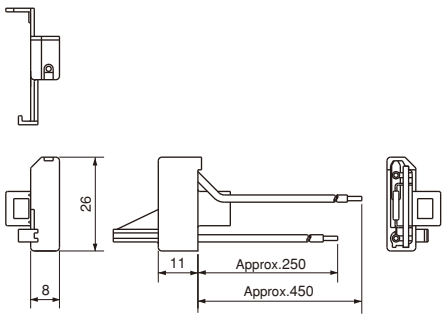

Reset release button

SZ-R1
SZ-R2
SZ-R3

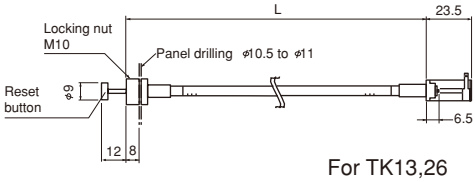

For TK13,26

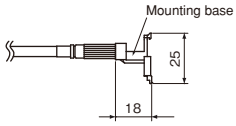

Type	L
SZ-R1	300
SZ-R1	500
SZ-R1	700

SZ-R4
SZ-R5
SZ-R6

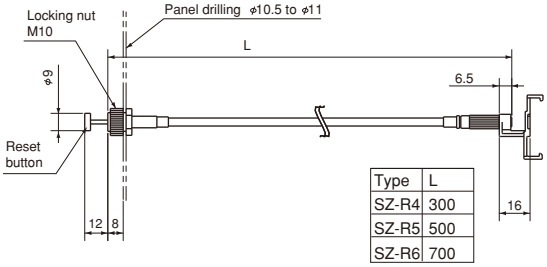

Type	L
SZ-R4	300
SZ-R5	500
SZ-R6	700

Dial cover
SZ-DA

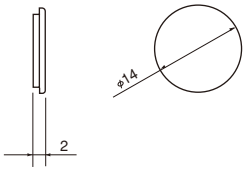

■ Characteristic curves

These curves show cold starting characteristics.

● Standard type

TR-0N, 5-1N,
TR-0N/3, 5-1N/3,
TR-0NH, 5-1NH,
TR-0NH/3, 5-1NH/3

(Trip Class 10)

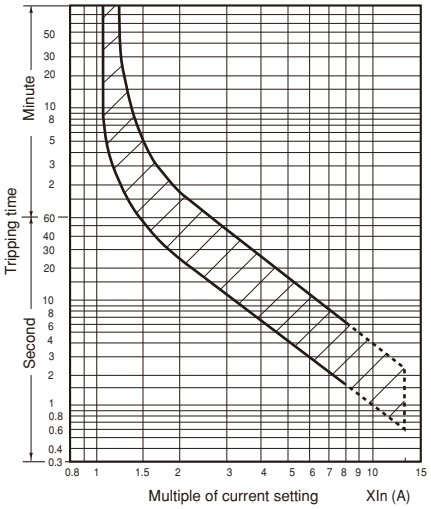

TK13
TK26

(Trip Class 10)

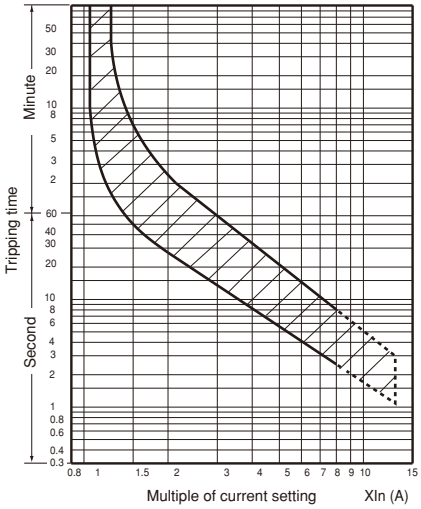

TR-N2 to N8
TR-N2/3 to N8/3
TR-N2H, N3H, N6H
TR-N2H/3, N3H/3, N6H/3

(Trip Class 10)

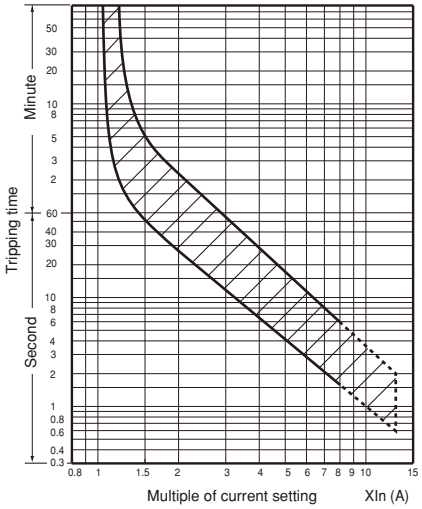

TR-N10 to N14,
TR-N10/3 to N14/3,
TR-N10H to N14H
TR-N10H/3 to N14H/3

(Trip Class 20)

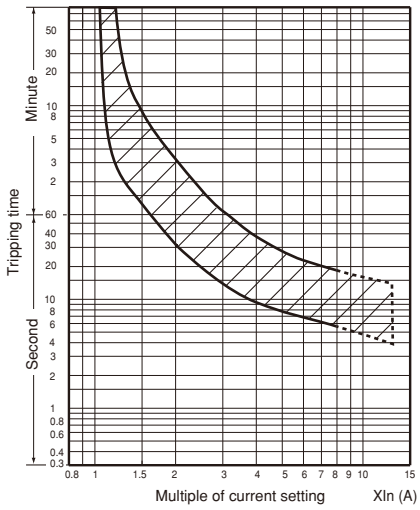

■ Wiring diagrams

● Standard type

TR-0N to N8
TR-0N/3 to N8/3
TR-0NH, 5-1NH, N2H, N3H, N6H
TR-0NH/3, 5-1NH/3, N2H/3, N3H/3, N6H/3
TK13, TK26, TK13H, TK26H

2-element

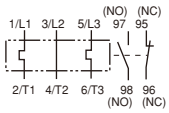

3-element

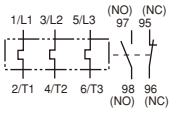

TR-N10 to N14
TR-N10/3 to N14/3
TR-N10H to N14H
TR-N10H/3 to N14H/3

2-element
(with CTs)

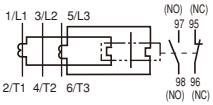

3-element
(with CTs)

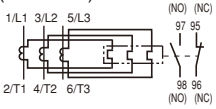

Thermal Overload Relays
TR series

■ Characteristic curves

These curves show cold starting characteristics.

● **Long time operating type** (When setting at the center dial current)

TR-0NL, 5-1NL
TR-0NL/3, 5-1NL/3
TR-0NLH, 5-1NLH
TR-0NLH/3, 5-1NLH/3

(Trip Class 30)

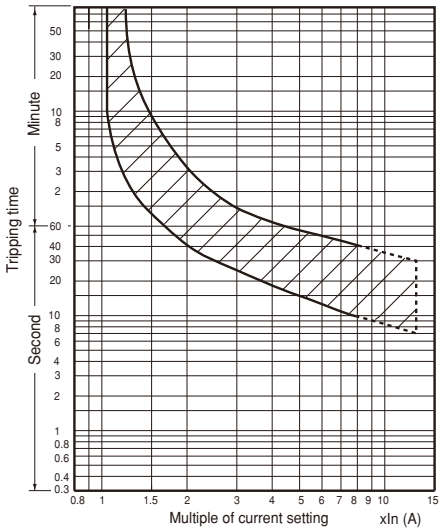

TK13LH
TK26LH

(Trip Class 30)

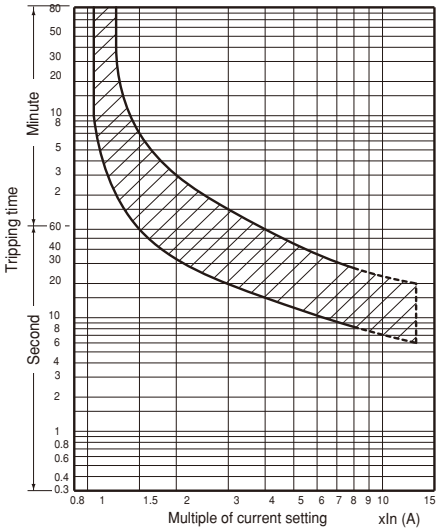

TR-N2L to N7L
TR-N2L/3 to N7L/3
TR-N2LH, N3LH, N6LH
TR-N2LH/3, N3LH/3, N6LH/3

(Trip Class 20)

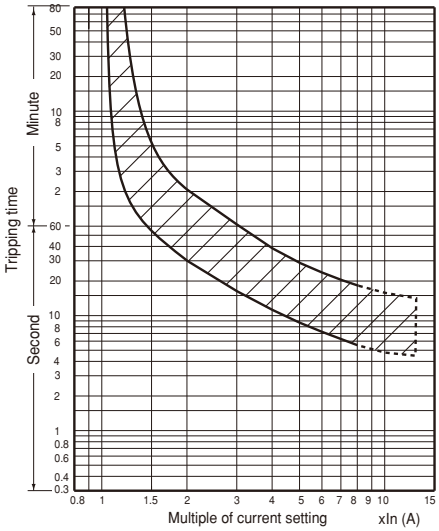

TR-N10L to N14L
TR-N10L/3 to N14L/3
TR-N10LH to N14LH
TR-N10LH/3 to N14LH/3

(Trip Class 30)

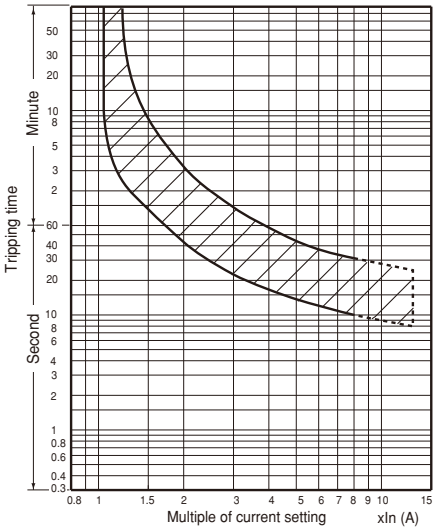

Fuji Electric FA Components & Systems Co., Ltd.
Information subject to change without notice

■ Characteristic curves

These curves show cold starting characteristics.

● Quick operating type

TR-0NQ, 5-1NQ

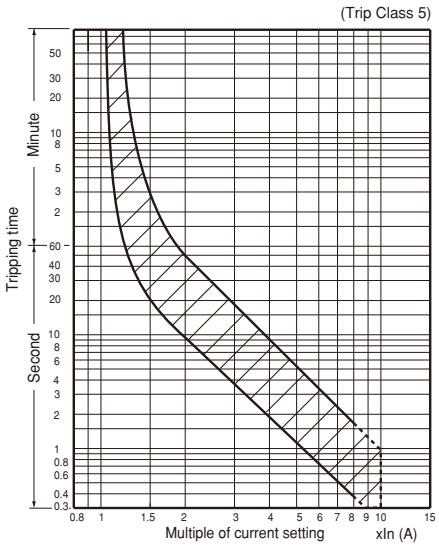

TK13LH
TK26LH

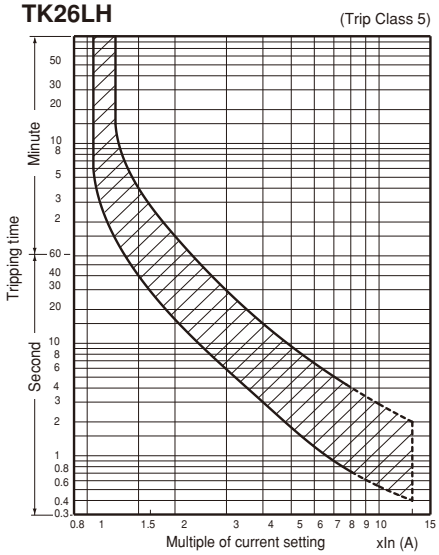

TR-N2Q, N3Q, N5Q

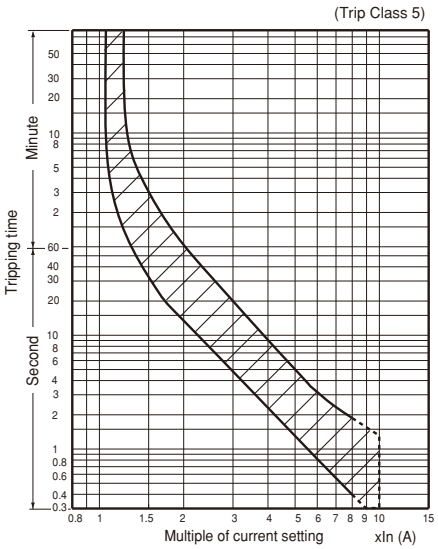

■ Wiring diagrams

● Long time operating type

TR-0NL to N7L
TR-0NL/3 to N7L/3
TR-0NLH, 5-1NLH, N2LH, N3LH, N6LH
TR-0NLH/3, 5-1NLH/3, N2LH/3, N3LH/3, N6LH/3
TK13HL, TK26HL

2-element

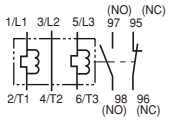

3-element

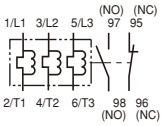

TR-N10L to N14L
TR-N10L/3 to N14L/3
TR-N10LH to N14LH
TR-N10LH/3 to N14LH/3

2-element (with CTs)

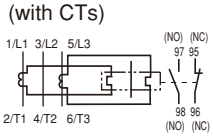

3-element (with CTs)

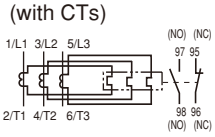

● Quick operating type

TR-0NQ, 5-1NQ
TR-N2Q, N3Q, N5Q
TK13Q, TK26Q

3-element

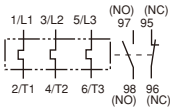

Thermal Overload Relays
TK series With phase-loss protective device

Thermal overload relays with phase-loss protective device

■ Description

FUJI TK series consists of a 3-heater element thermal overload relay and an phase-loss protective device. These two elements are assembled to make the relay unit. The overload relay characteristics are designed to meet the thermal characteristics of a squirrel-cage motors at the time of overload. A FUJI ADL mechanism is also provided to protect from phase-loss. This ADL mechanism is incorporated with the overload relay.
The characteristics are coordinated with the temperature rise curve in stator winding at the time of motor phase-loss. They respond quickly to overloads.
Other features include the following.

TK-5-1N AF88-1380

TK-26 KKD14-114

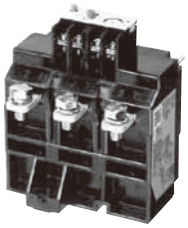

TK-N6 AF00-141

A trip-free mechanism, wide-range dial ampere adjustment, manual/auto reset chageover lever, operating indicator, and ambient temperature compensators.
Types are available ranging from TK-0N to TK-N14.

■ Ordering information

Specify the following:
1. Ordering code
See pages A1-88.

■ Characteristics

The operating characteristics of a thermal overload relays represents its tripping time and response current starting from cold or hot state.

Cold starting characteristics
In cold starting, tripping time is measured from the time when the temperature of the thermal overload relay is equal to the ambient temperature.

Hot starting characteristics
In hot starting, tripping time is measured from the time when the thermal overload relay reaches the steady state after non-tripping current flows two hours.

Standard	When all poles are equally energized			When all poles are not equally energized			Ambient temp.
	Operating limit Non-Tripping	Operating limit tripping	Overload (hot start)	Locked rotor (cold start)	Phase-loss protection	Operating limit Non-tripping	Tripping Hot start	
IEC 60947-4-1	105% Ie	120% Ie (2h max.)	class 10A 150% Ie 2min max.	class 10A 720% Ie 2 to 10s max.	Not provided	3-phase: 105% Ie	2-phase: 132% Ie	20˚C
			class 10 150% Ie 4min max.	class 10 720% Ie 4 to 10s max.			1-phase: 0 2h max.	
			class 20 150% Ie 8min max.1-phase:	class 20 720% Ie 6 to 20s max.	Provided	2-phase: 100% Ie	2-phase: 115% Ie	
			class 30 150% Ie 12min max.	class 30 720% Ie 9 to 30s max. *		1-phase: 90% Ie	1-phase: 0 2h max.	

Fuji Electric FA Components & Systems Co., Ltd.
Information subject to change without notice

TK-0N, 5-1N
TK-0NH, 5-1NH

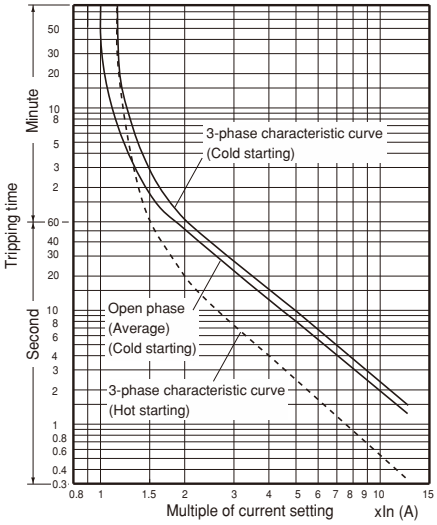

TK13LH
TK26LH

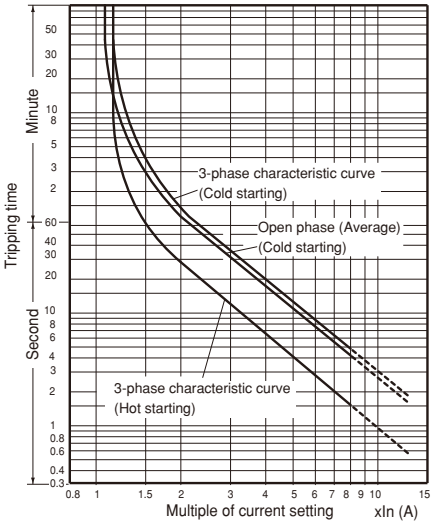

TK-N2, N3, N5, N6, N7, N8
TK-N2H, N3H, N6H

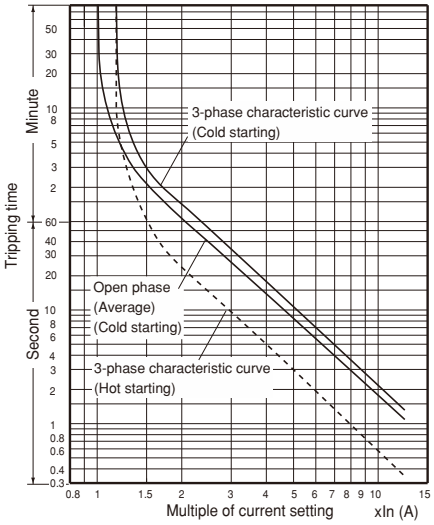

TK-N10, N12, N14
TK-N10H, N12H, N14H

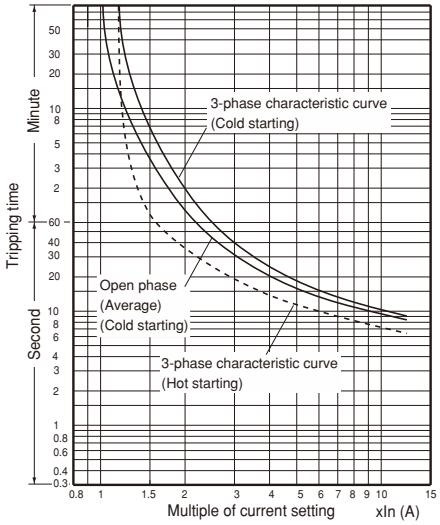

■ Dimensions, mm

TK-0N to N14 types:
Same as standard types
See pages A1-93 to A1-95.

■ Wiring diagrams

TK-0N to N14 types:
Same as standard 3-heater element types
See pages A1-99.

■ Ratings of auxiliary contact

Same as standard types.
See Page A1-92.

Solid-state Contactors
SS series General use

Solid-state contactors
General use

■ Description

Solid-state contactors (SSC) are required in cases where contacts must have long life because contacts are frequently made and broken, and where contactor noise must be eliminated. Single-and 3-pole solid-state contactors incorporate thyristors as making and breaking elements in the main circuit.

■ Features

- **Operation indicator provided**
  An operation indicator LED (red) is provided as a standard feature for all models, so you can easily check whether a control voltage is applied to the SSC.
- **Long service life, optimum for highly frequent switching**
  The solid-state contactor utilizes high-performance semiconductor switch elements to include the functions and features of conventional magnetic contactors. The SSC, featuring long life, low-noise, and high-speed response, is suitable for highly frequent switching of various types of loads, such as motors and heaters.

Single-pole type **3-pole type**

KKD05-253
SS101

AF91-622
SS1501

KKD06-043
SS083

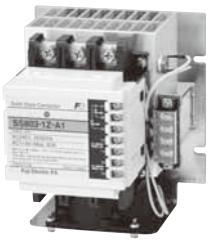
KKD06-045
SS803

- **Built-in surge suppressor**
  Varistors and C-R circuits are included so that surge voltage due to SSC switching and lightening can be suppressed to protect the control and main circuits.
- **AC and DC operation**
  The AC and DC operated type SSCs are available, either of which can be selected as required.
- **SSC with zero-cross switching function**
  The SSC is also available with a zero-cross switching function to enable load current switching at the point where the line voltage is near zero to suppress excessive inrush current in the load circuit.
- **Built-in auxiliary contact**
  An auxiliary contact module using semiconductor switches or relay contacts is included. Therefore an auxiliary output signal can easily be obtained without using a separate auxiliary devices.

■ Standards

■ Specifications

Single-pole types
● Main circuit 240V AC, SS101 to SS501
AC control voltage

Type		**SS101-5Z-A3 SS101-5Z-A4**	**SS201-5Z-A3 SS201-5Z-A4**	**SS301-5Z-A3 SS301-5Z-A4**	**SS401-5Z-A3 SS401-5Z-A4**	**SS501-5Z-A3 SS501-5Z-A4**
Ordering code		SS101-5ZA3 SS101-5ZA4	SS201-5ZA3 SS201-5ZA4	SS301-5ZA3 SS301-5ZA4	SS401-5ZA3 SS401-5ZA4	SS501-5ZA3 SS501-5ZA4
Main circuit	Rated voltage	100 — 240V AC 50/60Hz				
	Rated thermal current (A)*	10	20	30	40	50
	Max. heater capacity (kW) Single phase 200V AC	2	4	6	8	10
	Number of elements	Single-pole, 1-element				
Control circuit	Isolation method	Photocoupler				
	Control voltage Vn	A3: 100 — 120V AC, A4: 200 —240V AC				
	Pick-up voltage Drop-out voltage	85% Vn or less 35% Vn and over				
	Operating time (at 100% Vn) Release time(at 100% Vn)	30ms or less 30ms or less				
Auxiliary circuit		–				

Note: * The values are the maximum ratings of type with cooling fin that apply at an ambient temperature not exceeding 40°C.

■ Specifications

Single-pole types

● Main circuit 240V AC, SS701 to SS2001
AC control voltage

Type		SS701-1Z-A3 SS701-1Z-A4	SS1001-1Z-A3 SS1001-1Z-A4	SS1501-1Z-A3 SS1501-1Z-A4	SS2001-1Z-A3 SS2001-1Z-A4
Ordering code		SS701-1ZA3 SS701-1ZA4	SS1A1-1ZA3 SS1A1-1ZA4	SS1F1-1ZA3 SS1F1-1ZA4	SS2A1-1ZA3 SS2A1-1ZA4
Main circuit	Rated voltage	100 — 240V AC 50/60Hz			
	Rated thermal current (A)*	70	100	150	200
	Max. heater capacity (kW) Single phase 200V AC	14	20	30	40
	Number of elements	Single-pole, 1-element			
Control circuit	Isolation method	Photocoupler			
	Control voltage Vn	A3: 100 — 120V AC, A4: 200 —240V AC			
	Pick-up voltage Drop-out voltage	85% Vn or less 35% Vn and over			
	Operating time (at 100% Vn) Release time (at 100% Vn)	30ms or less 30ms or less			
Auxiliary circuit	Output Rated current and voltage	Thyristor 1NO A3: 50mA, 120V AC A4: 50mA, 240V AC			

Note: * The values are the maximum ratings of type with cooling fin that apply at an ambient temperature not exceeding 40°C.

● Main circuit 240V AC, SS101 to SS2001
DC control voltage

Type		SS101-3Z-D3	SS201-3Z-D3	SS301-3Z-D3	SS401-3Z-D3	SS501-3Z-D3
Ordering code		SS101-3ZD3	SS201-3ZD3	SS301-3ZD3	SS401-3ZD3	SS501-3ZD3
Main circuit	Rated voltage	100 — 240V AC 50/60Hz				
	Rated thermal current (A)*	10	20	30	40	50
	Max. heater capacity (kW) Single phase 200V AC	2	4	6	8	10
	Number of elements	Single-pole, 1-element				
Control circuit	Isolation method	Photocoupler				
	Control voltage Vn	5 — 24V DC				
	Pick-up voltage Drop-out voltage	3.5V or less 1V and over				
	Operating time (at 100% Vn) Release time (at 100% Vn)	15ms or less 15ms or less				
Auxiliary circuit		–				

Type		SS701-3Z-D3	SS1001-3Z-D3	SS1501-3Z-D3	SS2001-3Z-D3
Ordering code		SS701-3ZD3	SS1A1-3ZD3	SS1F1-3ZD3	SS2A1-3ZD3
Main circuit	Rated voltage	100 — 240V AC 50/60Hz			
	Rated thermal current (A)*	70	100	150	200
	Max. heater capacity (kW) Single phase 200V AC	14	20	30	40
	Number of elements	Single-pole, 1-element			
Control circuit	Isolation method	Photocoupler			
	Control voltage Vn	5 — 24V DC			
	Pick-up voltage Drop-out voltage	3.5V or less 1V and over			
	Operating time (at 100% Vn) Release time (at 100% Vn)	15ms or less 15ms or less			
Auxiliary circuit		–			

Note: * The values are the maximum ratings of type with cooling fin that apply at an ambient temperature not exceeding 40°C.

Solid-state Contactors
SS series General use

■ Specifications

Single-pole types

● Main circuit 480V AC, SS701H to SS2001H

AC control voltage

Type		SS701H-1Z-A3 SS701H-1Z-A4	SS1001H-1Z-A3 SS1001H-1Z-A4	SS1501H-1Z-A3 SS1501H-1Z-A4	SS2001H-1Z-A3 SS2001H-1Z-A4
Ordering code		SS701H-1ZA3 SS701H-1ZA4	SS1A1H-1ZA3 SS1A1H-1ZA4	SS1F1H-1ZA3 SS1F1H-1ZA4	SS2A1H-1ZA3 SS2A1H-1ZA4
Main circuit	Rated voltage	200 - 480V AC 50/60Hz			
	Rated thermal current (A)*	70	100	150	200
	Max. heater capacity (kW) Single phase 400V AC	28	40	60	80
	Number of elements	Single-pole, 1-element			
Control circuit	Isolation method	Photocoupler			
	Control voltage Vn	A3: 100 – 120V AC, A4: 200 – 240V AC			
	Pick-up voltage Drop-out voltage	85% Vn or less 35% Vn and over			
	Operating time (at 100% Vn) Release time (at 100% Vn)	30ms or less 30ms or less			
Auxiliary circuit	Output Rated current and voltage	Thyristor 1NO A3: 50mA, 120V AC A4: 50mA, 240V AC			

DC control voltage

Type		SS701H-3Z-D3	SS1001H-3Z-D3	SS1501H-3Z-D3	SS2001H-3Z-D3
Ordering code		SS701H-3ZD3	SS1A1H-3ZD3	SS1F1H-3ZD3	SS2A1H-3ZD3
Main circuit	Rated voltage	200 - 480V AC 50/60Hz			
	Rated thermal current (A)*	70	100	150	200
	Max. heater capacity (kW) Single phase 400V AC	28	40	60	80
	Number of elements	Single-pole, 1-element			
Control circuit	Isolation method	Photocoupler			
	Control voltage Vn	5 — 24V DC			
	Pick-up voltage Drop-out voltage	3.5V or less 1V and over			
	Operating time (at 100% Vn) Release time (at 100% Vn)	15ms or less 15ms or less			
Auxiliary circuit		–			

Note: * The values are the maximum ratings of type with cooling fin that apply at an ambient temperature not exceeding 40°C.

3-pole unit type

● Main circuit 240V AC, SS03 to SS120

Type *1		SS □■-1(Z)-A3, A4, D5		SS □■-1(Z)-A1, D2					
Ordering code *1		SS □■-1M(Z)A3, A4, D5		SS □■-1M(Z)A1, D2					
Main circuit	Rated voltage	100 - 240V AC 50/60Hz		100 - 240V AC 50/60Hz					
	Rated thermal current (A)	3	8	20	30	40	50	80	120
	Max. heater capacity (kW) Max. motor capacity (kW) *2 Motor full load current (A) 3-phase 200V AC	1.0 0.2 1.8	2.5 0.4 3.2	6.9 0.75 4.8	10.3 1.5 8	13.8 2.2 11.1	17.3 3.7 17.4	27.7 7.5 34	41.5 7.5 34
	Number of elements	3-pole, 2 or 3-element *3							
Control circuit	Isolation method	Photocoupler							
	Control voltage (Vn)	A3: 100–120V AC 50/60Hz A4: 200–240VAC 50/60Hz D5: 12–24V DC		A1: 100–120/200–240V AC 50/60Hz D2: 12/24V DC					
	Pick-up voltage Drop-out voltage	85% Vn or less 8V or less(D5) 30% Vn and over 1V and over(D5)		85% Vn or less 30% Vn and over					
	Operating time (at 100% Vn) Release time (at 100% Vn)	30ms or less 30ms or less							
Auxiliary circuit	Output AC operated DC operated	Thyristor 1NO Transistor 1NO						Thyristor 2NO Transistor 2NO	
	Rated current and voltage AC operated DC operated	50mA, 240V AC 0.1A, 24V DC		0.2A, 240V AC 0.2A, 24V DC					

Note: *1, *2, *3 *see page A1-107.*

Fuji Electric FA Components & Systems Co., Ltd. Information subject to change without notice

■ Specifications

3-pole unit types

● Main circuit 240V AC, SS03 to SS120

Type *1		SS □■-3(Z)-D5, D6		SS □■-3(Z)-D3					
Ordering code *1		SS □■-3M(Z)D5, D6		SS □■-3M(Z)D3					
Main circuit	Rated voltage	100 - 240V AC 50/60Hz							
	Rated thermal current (A)	3	8	20	30	40	50	80	120
	Max. heater capacity (kW) Max. motor capacity (kW) *2 Motor full load current (A) 3-phase 200V AC	1.0 0.2 1.8	2.5 0.4 3.2	6.9 1.5 8	10.3 2.2 11.1	13.8 3.7 17.4	17.3 5.5 26	27.7 7.5 34	41.5 7.5 34
	Number of elements	3-pole, 2 or 3-element *3							
Control circuit	Isolation method	Photocoupler							
	Control voltage (Vn)	D5: 12–24V DC D6: 5V DC		D3: 5–24V DC					
	Pick-up voltage Drop-out voltage	D5: 8V or less D6: 4V or less D5, D6: 1V and over		D3: 3.5V or less D3: 1.5V and over					
	Operating time (at 100% Vn) Release time (at 100% Vn)	5ms or less (SS□-3Z: 15ms or less) 15ms or less							
Auxiliary circuit	AC operated type DC operated type	— —							

Notes: *1 Replace the □ mark by rated thermal current code (03 to 200), and the ■ mark by the number of elements (2 or 3). *See page A1-127,128.*
*2 Maximum ratings when SSC is used with cooling fin (SX1-□) at temperature of 40˚C or less.
Motor starting current: 6 times full-load current, Motor starting time: 0.25s or less.
*3 2-element types are supplied in 3-pole with current carrying parts omitted from center pole.

● Main circuit 480V AC, SS30H to SS120H

Type *1		SS □■H-1(Z)-A1, D2				SS □■H-3(Z)-D3			
Ordering code *1		SS □■H-1M(Z)A1, D2				SS □■H-3M(Z)D3			
Main circuit	Rated voltage	200 - 480V AC 50/60Hz				200 - 480V AC 50/60Hz			
	Rated thermal current (A)	30	50	80	120	30	50	80	120
	Max. heater capacity (kW) Max. motor capacity (kW) *2 Motor full load current (A) 3-phase 400V AC	20.7 7.5 17	34.6 11 24	55.4 22 48	83.0 22 48	20.7 7.5 17	34.6 11 24	55.4 22 48	83.0 22 48
	Number of elements	3-pole, 2 or 3-element *3				3-pole, 2 or 3-element *3			
Control circuit	Isolation method	Photocoupler				Photocoupler			
	Control voltage (Vn)	A1: 100–120/200–240V AC 50/60Hz D2: 12/24V DC				5–24V DC			
	Pick-up voltage Drop-out voltage	85% Vn or less 30% Vn and over				3.5V or less 1.5V and over			
	Operating time (at 100% Vn) Release time (at 100% Vn)	30ms or less 30ms or less				5ms or less (SS□H-3Z: 15ms or less) 15ms or less			
Auxiliary circuit	Output AC operated DC operated	Thyristor 2NO Transistor 2NO				—			
	Rated current and voltage AC operated DC operated	0.2A, 240V AC 0.2A, 24V DC				—			

Notes: *1 Replace the □ mark by rated thermal current code (03 to 200), and the ■ mark by the number of elements (2 or 3). *See page A1-127,128.*
*2 Maximum ratings when SSC is used with cooling fin (SX1-□) at temperature of 40˚C or less.
Motor starting current: 6 times full-load current, Motor starting time: 0.25s or less.
*3 2-element types are supplied in 3-pole with current carrying parts omitted from center pole.

Solid-state Contactors
SS series General use

■ Specifications

3-pole independent type

● Main circuit 240V AC, SS03-4 to SS120-4

Type *1		SS□■-4(Z)-A3	SS □■-4(Z)-A4	SS □■-4(Z)-D3	SS □■-4(Z)-D5	SS □■-4(Z)-D6
Ordering code *1		SS □■-4M(Z)A3	SS □■-4M(Z)A4	SS □■-4M(Z)D3	SS □■-4M(Z)D5	SS □■-4M(Z)D6
Main circuit	Rated voltage	100 - 240V AC 50/60Hz			100 - 240V AC 50/60Hz	
	Rated thermal current (A)	20 30 40 50 80 120			3 8	3 8
	Max. heater capacity (kW) Single phase 200V AC	4 6 8 10 16 24			0.6 1.6	0.6 1.6
	Number of elements	3-pole, 2 or 3-element *3				
Control circuit	Isolation method	Photocoupler				
	Control voltage (Vn)	100–120V AC	200–240V AC	5–24V DC	12–24V DC	5V DC
	Pick-up voltage Drop-out voltage	85% Vn or less 30%Vn and over		3.5V or less 1.5V and over	8V or less 1V and over	4V or less 1V and over
	Operating time (at 100% Vn) Release time (at 100% Vn)	30ms or less 30ms or less		5ms or less (D3: SS□■-4Z: 15ms or less) 15ms or less		
Auxiliary circuit		—				

● Main circuit 480V AC, SS30H-4 to SS120H-4

Type *1		SS □■H-4(Z)-A3	SS □■H-4(Z)-A4	SS □■H-4(Z)-D3
Ordering code *1		SS □■H-4M(Z)A3	SS □■H-4M(Z)A4	SS □■H-4M(Z)D3
Main circuit	Rated voltage	200 - 480V AC 50/60Hz		
	Rated thermal current (A)	30 50 80 120		
	Max. heater capacity (kW) Single phase 400V AC	12 20 32 48		
	Number of elements	3-pole, 2 or 3-element *3		
Control circuit	Isolation method	Photocoupler		
	Control voltage (Vn)	100–120V AC	200–240V AC	5–24V DC
	Pick-up voltage Drop-out voltage	85% Vn or less 30% Vn and over		3.5V or less 1.5V and over
	Operating time (at 100% Vn) Release time (at 100% Vn)	30ms or less 30ms or less		5ms or less (SS□■H-4Z: 15ms or less) 15ms or less
Auxiliary circuit		—		

Notes: *1 Replace the □ mark by rated thermal current code (03 to 200) and the ■ mark by the number of elements (2 or 3). *See page A1-127, 128.*
*2 Maximum ratings when SSC is used with cooling fin (SX1-□) at temperature of 40˚C or less.
*3 2-element types are supplied in 3-pole with current carrying parts omitted from center pole.

Fuji Electric FA Components & Systems Co., Ltd.
Information subject to change without notice

● 3-pole AC operated

Type Main circuit 240V AC: **Blank** 480V AC: **H**		Control circuit 3-pole unit type: **1**						3-pole independent type: **4**			
		Zero-cross function Provided: **Z**			Not provided: **Blank**			Provided: **Z**		Not provided: **Blank**	
3-pole 2-element	3-pole 3-element	Control voltage: 100-120V AC/200-220V AC: **A1**, 100-120V AC: **A3**, 200-240V AC: **A4**									
		A1	A3	A4	A1	A3	A4	A3	A4	A3	A4
		With cooling fin: F						With cooling fin: F			
SS032	SS033		●	●		●	●				
SS082	SS083		●	●		●	●				
SS202	SS203	●			●			●	●	●	●
SS302	SS303	●			●			●	●	●	●
SS302H	SS303H	●			●			●	●	●	●
SS402	SS403	●			●			●	●	●	●
SS502	SS503	●			●			●	●	●	●
SS502H	SS503H	●			●			●	●	●	●
SS802	SS803	●			●			●	●	●	●
SS802H	SS803H	●			●			●	●	●	●
SS1202	SS1203	●			●			●	●	●	●
SS1202H	SS1203H	●			●			●	●	●	●

Note: ● Available

● 3-pole DC operated

Type Main circuit 240V AC: **Blank** 480V AC: **H**		Control circuit 3-pole unit type: **1**				3-pole unit type: **3**						3-pole independent type: **4**					
		Zero-cross function **Z**		**Blank**		Provided: **Z** **Z**			**Blank**			Not provided: **Blank** **Z**			**Blank**		
3-pole 2-element	3-pole 3-element	Control voltage: 12/24V DC: **D2**, 5-24V DC: **D3**, 12-24V DC: **D5**, 5V DC: **D6**															
		D2	D5	D2	D5	D3	D5	D6	D3	D5	D6	D3	D5	D6	D3	D5	D6
		With cooling fin: F										With cooling fin: F					
SS032	SS033		●		●		●	●		●	●		●	●		●	●
SS082	SS083		●		●		●	●		●	●		●	●		●	●
SS202	SS203	●		●		●			●			●			●		
SS302	SS303	●		●		●			●			●			●		
SS302H	SS303H	●		●		●			●			●			●		
SS402	SS403	●		●		●			●			●			●		
SS502	SS503	●		●		●			●			●			●		
SS502H	SS503H	●		●		●			●			●			●		
SS802	SS803	●		●		●			●			●			●		
SS802H	SS803H	●		●		●			●			●			●		
SS1202	SS1203	●		●		●			●			●			●		
SS1202H	SS1203H	●		●		●			●			●			●		

Note: ● Available

Solid-state Contactors
SS series General use

■ Type number nomenclature

• Single-pole type

SS 70 1 □ – 1 Z – A3

Basic type

Rated thermal current
10: 10A 70: 70A
20: 20A 100: 100A
30: 30A 150: 150A
40: 40A 200: 200A
50: 50A

No. of main circuit elements
1: Single pole 1-element

Rated voltage of main circuit
Blank: 100–240V AC
H: 200–480V AC

Control voltage
A3: 100–120V AC
A4: 200–240V AC
D3: 5–24V DC

Zero-cross function
Z: Provided

Control circuit

	Isolation method	Voltage detector	Auxiliary contact	Applicable contactor	
1	Photocoupler	Provided	Provided	SS701 to 2001	240V AC
				SS701H to 2001H	480V AC
3	Photocoupler	Not provided	Not provided	SS101 to 2001	240V AC
				SS701H to 2001H	480V AC
5	Photocoupler	Not provided	Not provided	SS101 to 501	240V AC

• 3-pole type

SS 20 2 □ – 1 Z – A3 / F / T

Basic type

Rated thermal current
03: 3A *1 80: 80A
08: 8A *2 120: 120A
20: 20A
30: 30A
40: 40A
50: 50A

No. of main circuit elements
2: 3-pole 2-element
3: 3-pole 3-element

Rated voltage of main circuit
Blank: 100–240V AC
H: 200–480V AC

Terminal cover
Blank: Not provided
T: Provided (only for SS032 to SS502, SS033 to SS503 of main circuit voltage 200V)

Shipping form
F: Contactor and cooling fin set
F-A3: Contactor and cooling fin set *3
F-A4: Contactor and cooling fin set *4
F-D5: Contactor and cooling fin set *5
Blank: Contactor only
(Cooling fin sold separatry)

Control voltage
A1: 100–120/200–220V AC
A3: 100–120V AC
A4: 200–240V AC
D2: 12/24V DC
D3: 5–24V DC
D5: 12–24V DC
D6: 5V DC

Zero-cross function
Blank: Not provided
Z: Provided

Control circuit

	Control method		Isolation method	Voltage detector	Auxiliary contact
	3-pole unit	3-pole independent			
1	○		Photocoupler	Provided	Provided
3	○		Photocoupler	Not provided	Not provided
4		○	Photocoupler	Not provided	Not provided

Notes: *1 Type SS03□ can carry the rated thermal current even if no cooling fin is fitted.
*2 Type SS08□ is shipped with a cooling fin fitted to the main body even if /F is not suffixed to the type number.
*3 Suffix code applicable only to type SS80□ and type SS120□. Fan rated operating voltage: 100–120V AC, 50/60Hz.
*4 Suffix code applicable only to type SS80□ and type SS120□. Fan rated operating voltage: 200–240V AC, 50/60Hz.
*5 Suffix code applicable only to type SS80□ and type SS120□. Fan rated operating voltage: 24V DC.

■ Ordering code system

S S 8 0 3 H — 1 Z A 1 F A 3
① ② ③④ ⑤ ⑥ ⑦ ⑧ ⑨ ⑩ ⑪ ⑫ ⑬

① Product category

Description	Code
Contactor	S

② Series category

Description	Code
Solid-state contactor	S

③④ Framesize

Frame size	Code ③	Code ④
03	0	3
08	0	8
10	1	0
20	2	0
30	3	0
40	4	0
50	5	0
70	7	0
80	8	0
100	1	A
120	1	C
150	1	F
200	2	A

⑤ No. of main circuit elements

No. of elements	Code
Single pole, 1-element	1
3-pole, 2-element	2
3-pole, 3-element	3

⑥ Rated voltage of main circuit

Rated voltage	Code
100 - 240V AC	Blank
200 - 480V AC	H

⑦ Control circuit

● 3-pole type

Control method	Insolation method	Voltage detector	Auxiliary contact	Code
3-pole unit	Photocoupler	Provided	Provided	1
3-pole unit	Photocoupler	Not provided	Not provided	3
3-pole independent	Photocoupler	Not provided	Not provided	4

● Single-pole type

Control method	Insolation method	Voltage detector	Auxiliary contact	Code
Single-pole	Photocoupler	Provided	Provided	1
	Photocoupler	Not provided	Not provided	3
	Photocoupler	Not provided	Not provided	5

⑧ Zero-cross function

Zero-cross function	Code Single-pole	Code 3-pole
Not provided	Blank	M
Provided	Z	Z

⑨⑩ Control voltage

Description	Code ⑨	Code ⑩
100-120V/200-240V AC	A	1
100-120V AC	A	3
200-240V AC	A	4
12/24V DC	D	2
5-24 V DC	D	3
12-24V DC	D	5
5V DC	D	6

⑪ Shipping form

Description	Code Single-pole	Code 3-pole
Cooling fin set	Blank	F
Contactor only	Not provided	Blank

⑫⑬ Cooling fan voltage

Cooling fin control voltage	Code ⑫	Code ⑬
100-120V AC	A	3
200-240V AC	A	4
12-24V DC	D	5

■ Versions

Single-pole type

● Main circuit 240V AC

Control voltage	Voltage detector	Auxiliary contact	Zero-cross function	Rated thermal current 10A	20A	30A	40A	50A
100 –120V AC	–	–	●	SS101-5Z-A3	SS201-5Z-A3	SS301-5Z-A3	SS401-5Z-A3	SS501-5Z-A3
200 –240V AC	–	–	●	SS101-5Z-A4	SS201-5Z-A4	SS301-5Z-A4	SS401-5Z-A4	SS501-5Z-A4
5 –24V DC	–	–	●	SS101-3Z-D3	SS201-3Z-D3	SS301-3Z-D3	SS401-3Z-D3	SS501-3Z-D3

Control voltage	Voltage detector	Auxiliary contact	Zero-cross function	Rated thermal current 70A	100A	150A	200A
100 –120V AC	●	●	●	SS701-1Z-A3	SS1A1-1Z-A3	SS1F1-1Z-A3	SS2A1-1Z-A3
200 –240V AC	●	●	●	SS701-1Z-A4	SS1A1-1Z-A4	SS1F1-1Z-A4	SS2A1-1Z-A4
5 –24V DC	–	–	●	SS701-3Z-D3	SS1A1-3Z-D3	SS1F1-3Z-D3	SS2A1-3Z-D3

● Main circuit 480V AC

Control voltage	Voltage detector	Auxiliary contact	Zero-cross function	Rated thermal current 70A	100A	150A	200A
100 –120V AC	●	●	●	SS701H-1Z-A3	SS1A1H-1Z-A3	SS1F1H-1Z-A3	SS2A1H-1Z-A3
200 –240V AC	●	●	●	SS701H-1Z-A4	SS1A1H-1Z-A4	SS1F1H-1Z-A4	SS2A1H-1Z-A4
5 –24V DC	–	–	●	SS701H-3Z-D3	SS1A1H-3Z-D3	SS1F1H-3Z-D3	SS2A1H-3Z-D3

Note: ● Provided – Not provided

Solid-state Contactors
SS series General use

■ Versions

3-pole type

● Main circuit 240V AC

Rated thermal current		3A	8A	20A	30A	40A	50A	80A	120A
AC control voltage *1	2-element	SS032-1M□	SS082-1M□	SS202-1M□F SS202-4M□F	SS302-1M□F SS302-4M□F	SS402-1M□F SS402-4M□F	SS502-1M□F SS502-4M□F	SS802-1M□F■ SS802-4M□F■	SS1C2-1M□F■ SS1C2-4M□F■
	(With zero-cross function)	SS032-1Z□	SS082-1Z□	SS202-1Z□F SS202-4Z□F	SS302-1Z□F SS302-4Z□F	SS402-1Z□F SS402-4Z□F	SS502-1Z□F SS502-4Z□F	SS802-1Z□F■ SS802-4Z□F■	SS1C2-1Z□F■ SS1C2-4Z□F■
	3-element	SS033-1M□	SS083-1M□	SS203-1M□F SS203-4M□F	SS303-1M□F SS303-4M□F	SS403-1M□F SS403-4M□F	SS503-1M□F SS503-4M□F	SS803-1M□F■ SS803-4M□F■	SS1C3-1M□F■ SS1C3-4M□F■
	(With zero-cross function)	SS033-1Z□	SS083-1Z□	SS203-1Z□F SS203-4Z□F	SS303-1Z□F SS303-4Z□F	SS403-1Z□F SS403-4Z□F	SS503-1Z□F SS503-4Z□F	SS803-1Z□F■ SS803-4Z□F■	SS1C3-1Z□F■ SS1C3-4Z□F■
DC control voltage *2	2-element	SS032-1M□ SS032-3M□ SS032-4M□	SS082-1M□ SS082-3M□ SS082-4M□	SS302-1M□F SS302-3M□F SS302-4M□F	SS302-1M□F SS302-3M□F SS302-4M□F	SS402-1M□F SS402-3M□F SS402-4M□F	SS502-1M□F SS502-3M□F SS502-4M□F	SS802-1M□F■ SS802-3M□F■ SS802-4M□F■	SS1C2-1M□F■ SS1C2-3M□F■ SS1C2-4M□F■
	(With zero-cross function)	SS032-1Z□ SS032-3Z□ SS032-4Z□	SS082-1Z□ SS082-3Z□ SS082-4Z□	SS302-1Z□F SS302-3Z□F SS302-4Z□F	SS302-1Z□F SS302-3Z□F SS302-4Z□F	SS402-1Z□F SS402-3Z□F SS402-4Z□F	SS502-1Z□F SS502-3Z□F SS502-4Z□F	SS802-1Z□F■ SS802-3Z□F■ SS802-4Z□F■	SS1C2-1Z□F■ SS1C2-3Z□F■ SS1C2-4Z□F■
	3-element	SS033-1M□ SS033-3M□ SS033-4M□	SS083-1M□ SS083-3M□ SS083-4M□	SS203-1M□F SS203-3M□F SS203-4M□F	SS303-1M□F SS303-3M□F SS303-4M□F	SS403-1M□F SS403-3M□F SS403-4M□F	SS503-1M□F SS503-3M□F SS503-4M□F	SS803-1M□F■ SS803-3M□F■ SS803-4M□F■	SS1C3-1M□F■ SS1C3-3M□F■ SS1C3-4M□F■
	(With zero-cross function)	SS033-1Z□ SS033-3Z□ SS033-4Z□	SS083-1Z□ SS083-3Z□ SS083-4Z□	SS203-1Z□F SS203-3Z□F SS203-4Z□F	SS303-1Z□F SS303-3Z□F SS303-4Z□F	SS403-1Z□F SS403-3Z□F SS403-4Z□F	SS503-1Z□F SS503-3Z□F SS503-4Z□F	SS803-1Z□F■ SS803-3Z□F■ SS803-4Z□F■	SS1C3-1Z□F■ SS1C3-3Z□F■ SS1C3-4Z□F■

Note: Enter the cooling fan voltage code in the ■ mark, *see page A1-128.*

● Main circuit 480V AC

Rated thermal current		30A	50A	80A	120A
AC control voltage *1	2-element	SS302H-1M□F SS302H-4M□F	SS502H-1M□F SS502H-4M□F	SS802H-1M□F■ SS802H-4M□F■	SS1C2H-1M□F■ SS1C2H-4M□F■
	(With zero-cross function)	SS302H-1Z□F SS302H-4Z□F	SS502H-1Z□F SS502H-4Z□F	SS802H-1Z□F■ SS802H-4Z□F■	SS1C2H-1Z□F■ SS1C2H-4Z□F■
	3-element	SS303H-1M□F SS303H-4M□F	SS503H-1M□F SS503H-4M□F	SS803H-1M□F■ SS803H-4M□F■	SS1C3H-1M□F■ SS1C3H-4M□F■
	(With zero-cross function)	SS303H-1Z□F SS303H-4Z□F	SS503H-1Z□F SS503H-4Z□F	SS803H-1Z□F■ SS803H-4Z□F■	SS1C3H-1Z□F■ SS1C3H-4Z□F■
DC control voltage *2	2-element	SS302H-1M□F SS302H-3M□F SS302H-4M□F	SS502H-1M□F SS502H-3M□F SS502H-4M□F	SS802H-1M□F■ SS802H-3M□F■ SS802H-4M□F■	SS1C2H-1M□F■ SS1C2H-3M□F■ SS1C2H-4M□F■
	(With zero-cross function)	SS302H-1Z□F SS302H-3Z□F SS302H-4Z□F	SS502H-1Z□F SS502H-3Z□F SS502H-4Z□F	SS802H-1Z□F■ SS802H-3Z□F■ SS802H-4Z□F■	SS1C2H-1Z□F■ SS1C2H-3Z□F■ SS1C2H-4Z□F■
	3-element	SS303H-1M□F SS303H-3M□F SS303H-4M□F	SS503H-1M□F SS503H-3M□F SS503H-4M□F	SS803H-1M□F■ SS803H-3M□F■ SS803H-4M□F■	SS1C3H-1M□F■ SS1C3H-3M□F■ SS1C3H-4M□F■
	(With zero-cross function)	SS303H-1Z□F SS303H-3Z□F SS303H-4Z□F	SS503H-1Z□F SS503H-3Z□F SS503H-4Z□F	SS803H-1Z□F■ SS803H-3Z□F■ SS803H-4Z□F■	SS1C3H-1Z□F■ SS1C3H-3Z□F■ SS1C3H-4Z□F■

Note: Enter the cooling fan voltage code in the ■ mark, *see page A1-128.*

Notes:
Control voltage (*Refer to page A1-128, 129.*)

*1 Replace the □ mark in the order number by the control voltage codes shown below.

A1	100–120/200–240V AC
A3	100–120V AC
A4	200–240V AC

*2 Replace the □ mark in the order number by the control voltage codes shown below.

D2	12/24V DC
D3	5–24V DC
D5	12–24V DC
D6	5V DC

■ Dimensions, mm

Single-pole type

● **SS101**

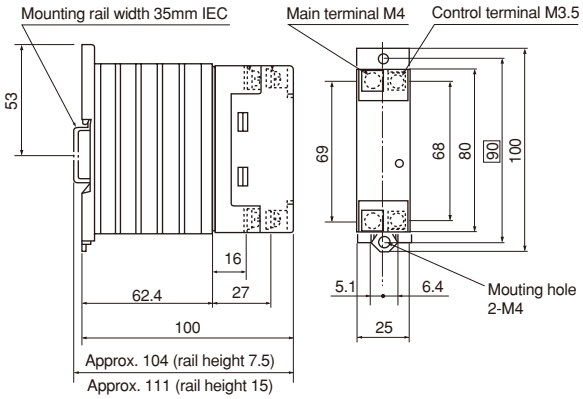

● **SS201**

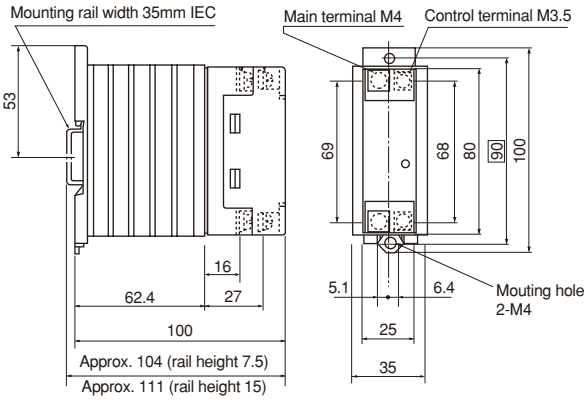

● **SS301, 401**

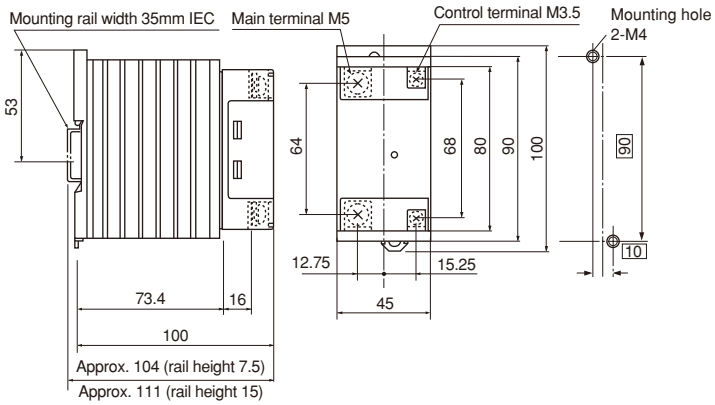

● **SS501**

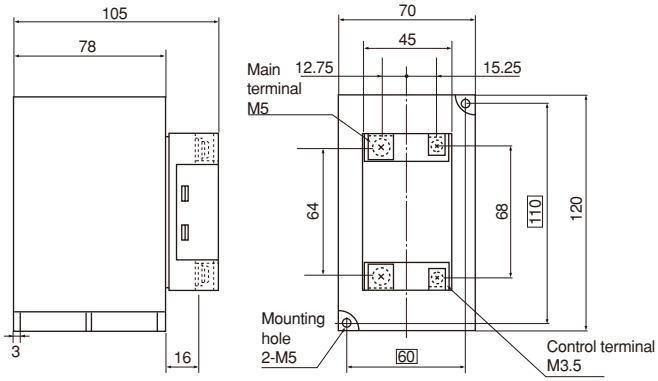

Mass:
SS101: 0.22kg SS401: 0.36kg
SS201: 0.24kg SS501: 0.66kg
SS301: 0.36kg

● **SS701**

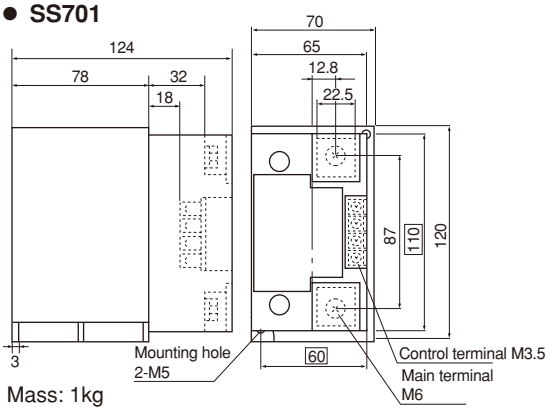

Mass: 1kg

□ Mounting hole dimensions

● **SS1001**

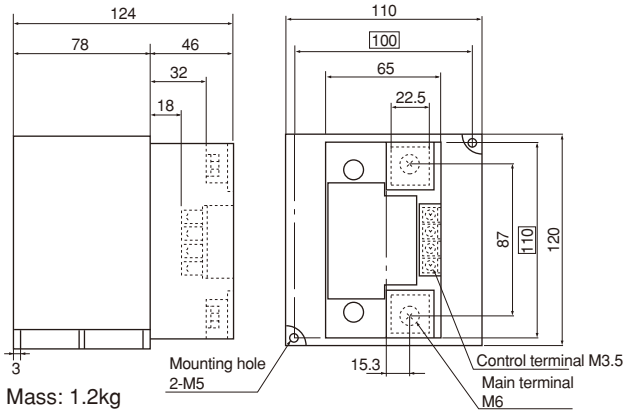

Mass: 1.2kg

■ Wiring diagram

● **SS101 to SS501**

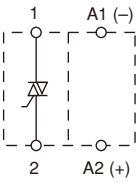

Input
A3: 100–120V AC
A4: 200–240V AC
D3: 5–24V DC

Solid-state Contactors
SS series General use

■ Dimensions, mm

Single-pole type

● **SS1501**

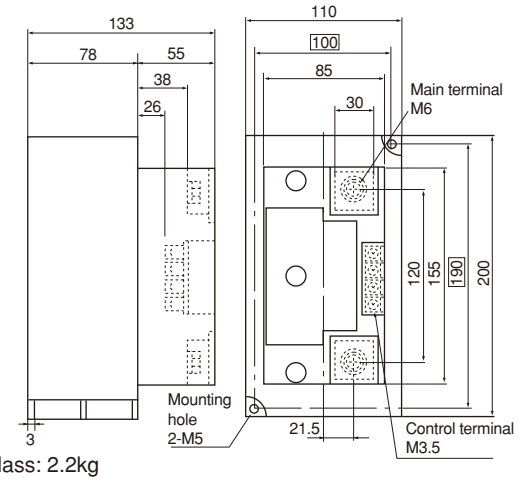

Mass: 2.2kg

● **SS2001**

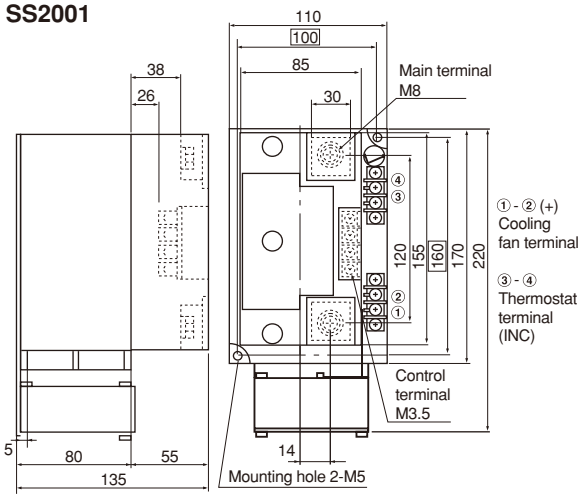

Mass: 2.9kg

Mounting hole dimensions

■ Wiring diagrams

● **SS701 to SS1501**
SS701H to SS1501H

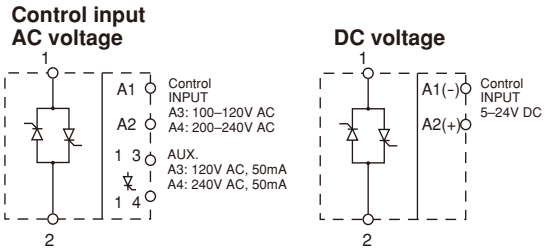

● **SS2001, SS2001H**

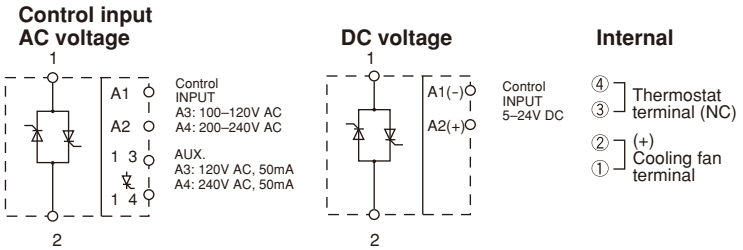

Single pole type solid-state contactor Application example

●Drive system

•Driven by relay contact

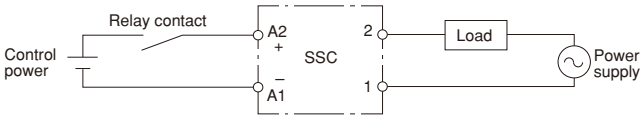

•Driven by NPN transistor

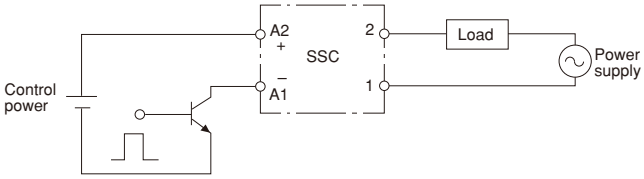

•Driven by PNP transistor

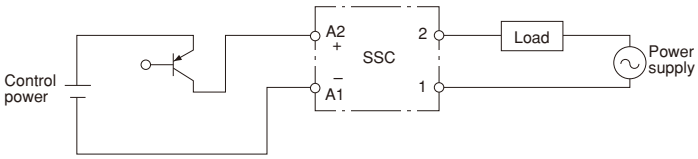

●Connection to load

•Heater control

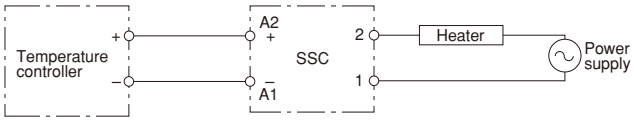

•Incandescent lamp

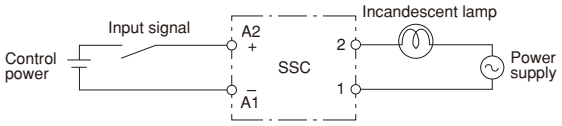

•3-phase motor

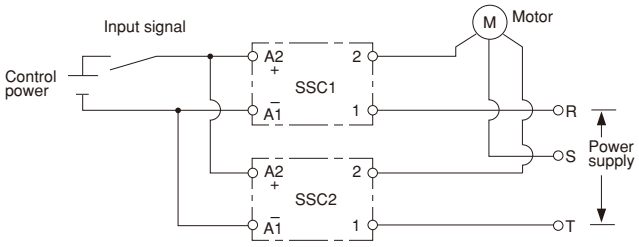

Fuji Electric FA Components & Systems Co., Ltd.
Information subject to change without notice

■ Dimensions, mm

3-pole unit type

● **SS03** (Rail mounting only)

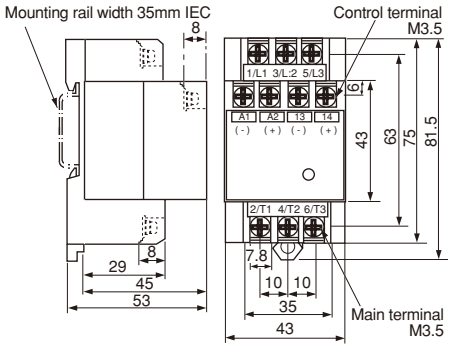

Mass: Approx. 0.18kg

● **SS08**

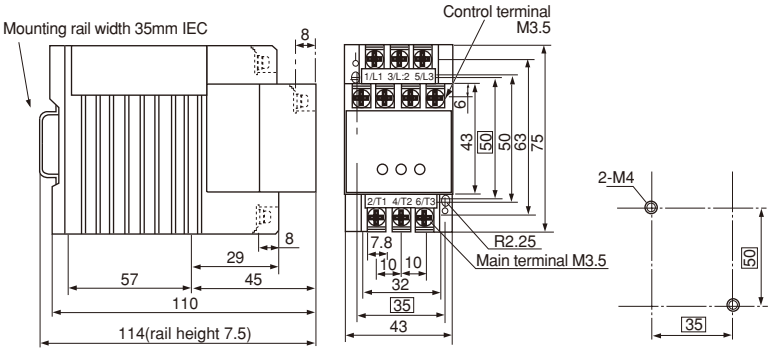

Mass: Approx. 0.3kg

● **SS202, 203, 302**

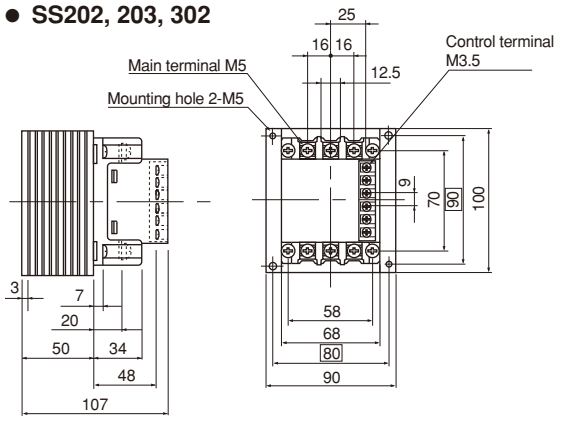

Mass: Approx. 0.77kg

● **SS303, 403**

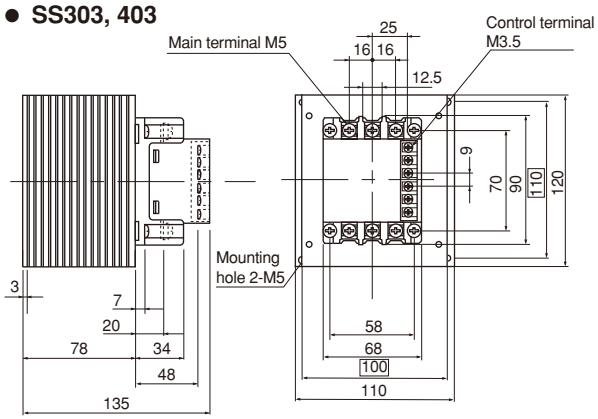

Mass: Approx. 1.1kg

● **SS402**

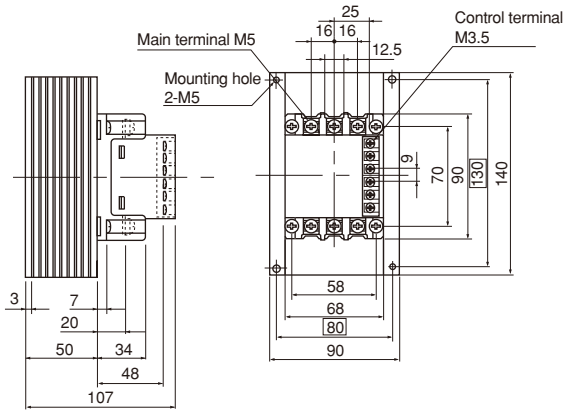

Mass: Approx. 0.99kg

● **SS502**

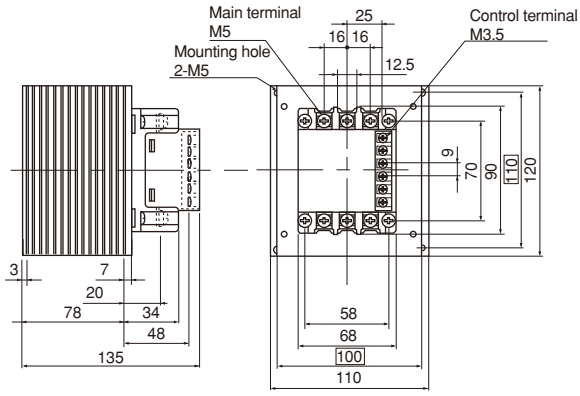

Mass: Approx. 1.1kg

▭ Mounting hole dimensions

■ Dimensions, mm

● **SS503**

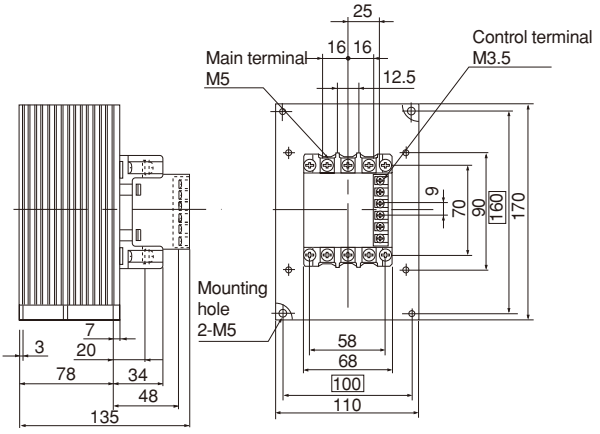

Mass: Approx. 1.6kg

● **SS802, 803, 802H, 803H**

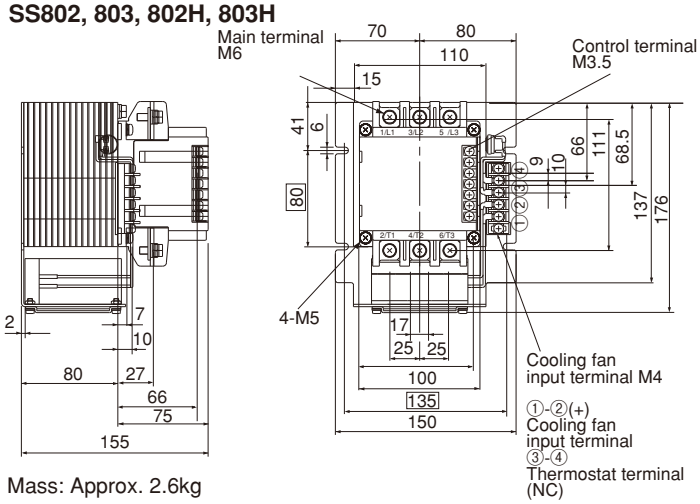

Mass: Approx. 2.6kg

● **SS1202, 1203, 1202H, 1203H**

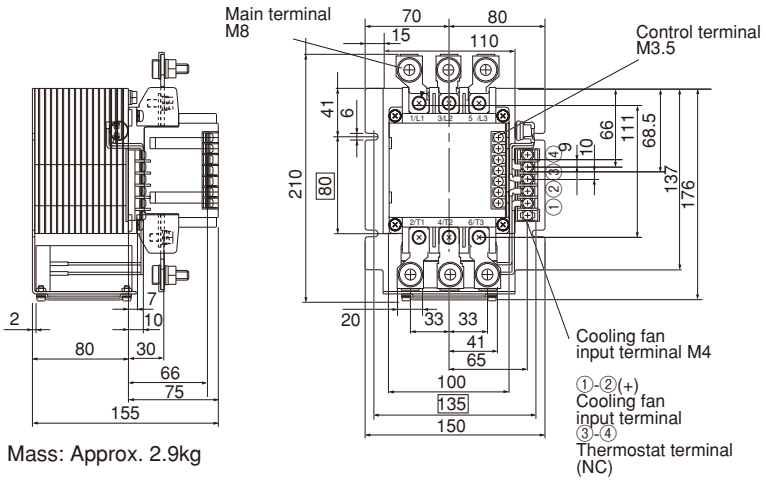

Mass: Approx. 2.9kg

● **SS302H, 303H**

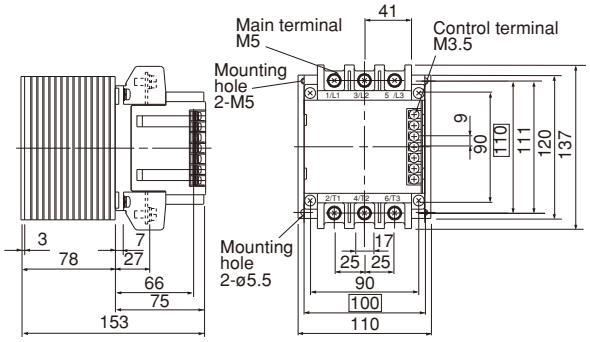

Mass: Approx. 1.8kg

● **SS502H**

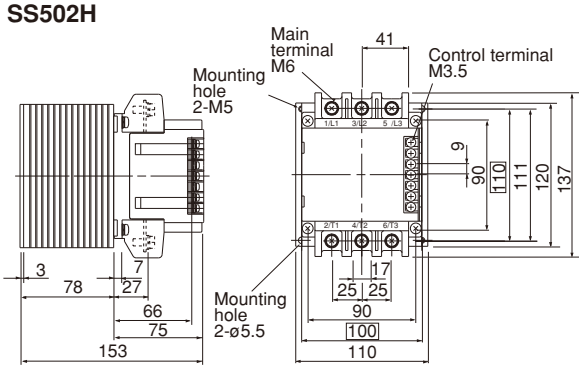

Mass: Approx. 1.8kg

● **SS503H**

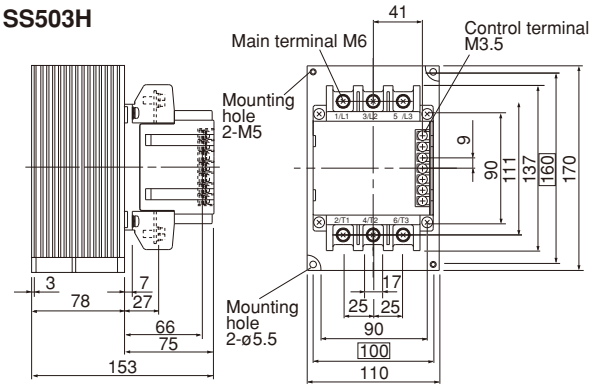

Mass: Approx. 2.2kg

▭ Mounting hole dimensions

■ Dimensions, mm/Cooling fins

● **SX1-D10, SX1-D14**

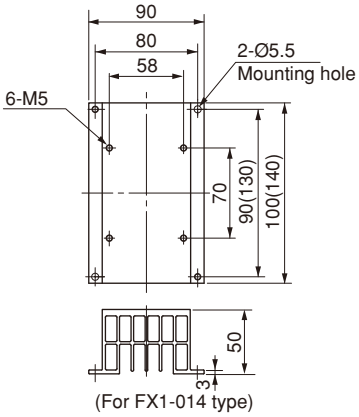

● **SX1-E12**

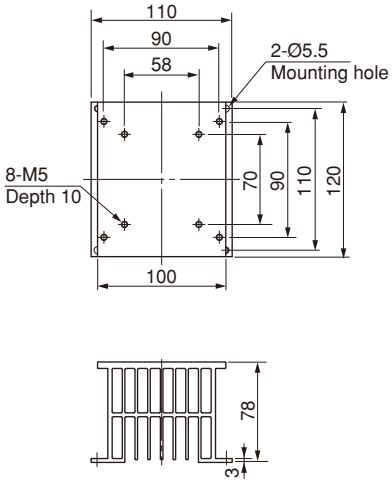

● **SX1-E17**

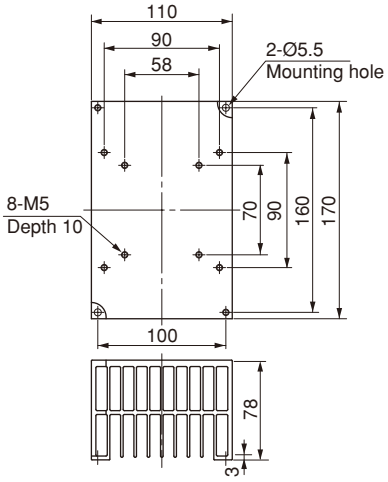

● **SX1-C12**

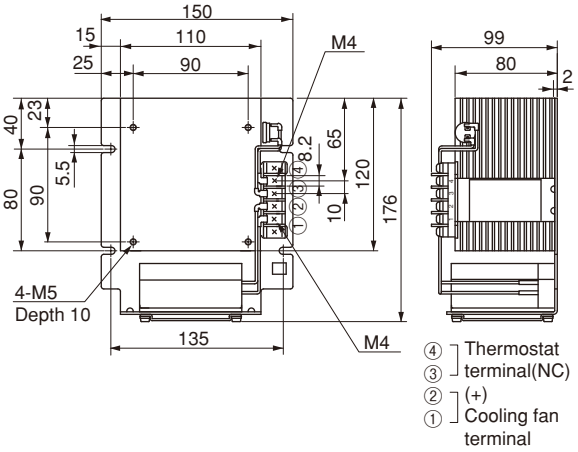

Type	Used with	Mass (kg)
SX1-D10	SS202, SS203, SS302	Approx. 0.36
SX1-D14	SS402	Approx. 0.53
SX1-E12	SS302H, SS303, SS303H SS403, SS502, SS502H	Approx. 0.82
SX1-E17	SS503, SS503H	Approx. 1.16
SX1-C12-A3 100–120V AC 50/60Hz **SX1-C12-A4** 200–240V AC 50/60Hz **SX1-C12-D5** 24V DC	SS802, SS802H, SS803 SS803H, SS1202, SS1202H SS1203, SS1203H	Approx. 2.2

■ Wiring diagrams

● **SS03, SS08/2-element**

A1, A2, A3, C3, COM: Control terminals
13, 14: Aux.terminals

SS032-1□-A□
SS082-1□-A□

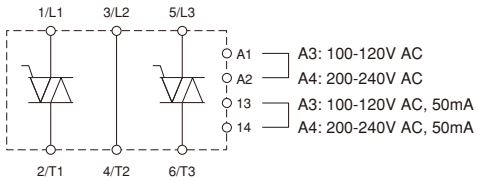

SS032-3□-D6
SS082-3□-D6

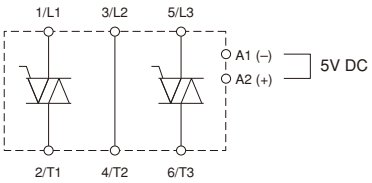

SS032-1□-D5
SS082-1□-D5

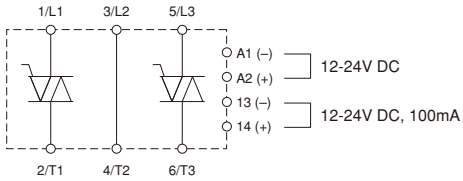

SS032-4□-D5
SS082-4□-D5

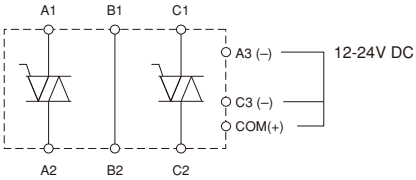

SS032-3□-D5
SS082-3□-D5

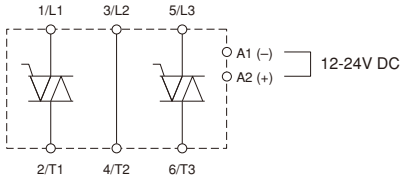

SS032-4□-D6
SS082-4□-D6

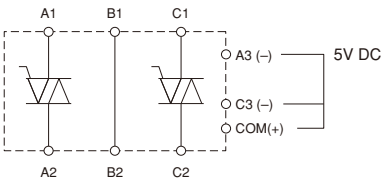

■ Wiring diagrams

A1, A2, A3, B3, B4, C3, C4: Control terminals
13, 14, 23, 24: Aux.terminals

● SS03, SS08/3-element

SS033-1□-A□
SS083-1□-A□

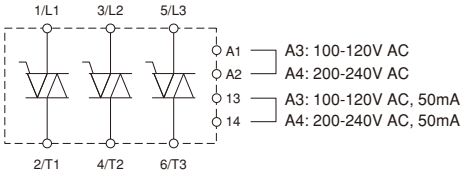

SS033-3□-D6
SS083-3□-D6

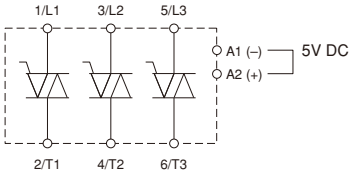

SS033-1□-D5
SS083-1□-D5

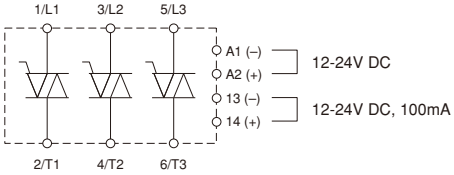

SS033-4□-D5
SS083-4□-D5

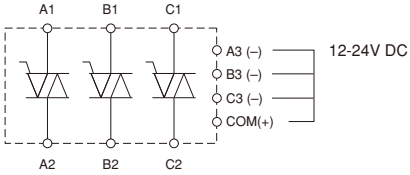

SS033-3□-D5
SS083-3□-D5

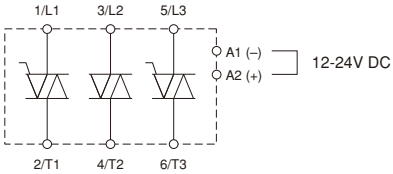

SS032-4□-D6
SS082-4□-D6

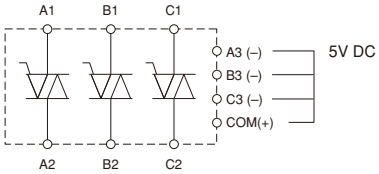

● SS20, SS30, SS40, SS50, SS80, SS120

2-element

SS□-1
AC control

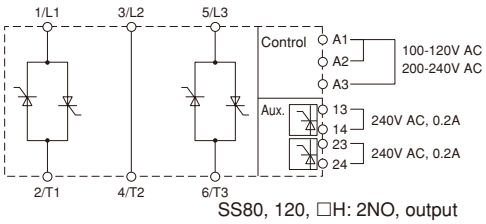

SS80, 120, □H: 2NO, output

SS□-1
DC control

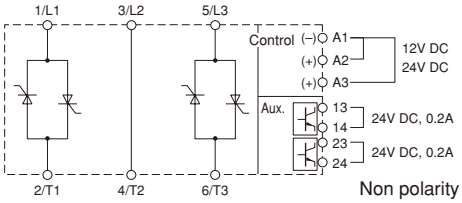

Non polarity

SS□-3

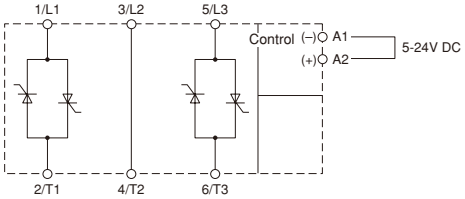

SS□-4

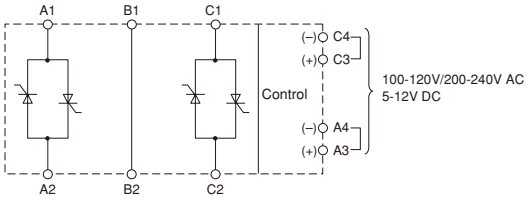

3-element

SS□-1
AC control

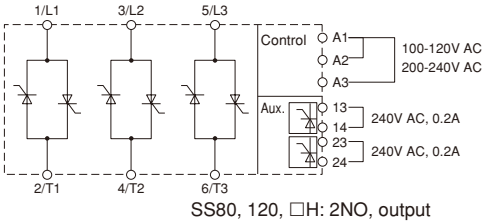

SS80, 120, □H: 2NO, output

SS□-1
DC control

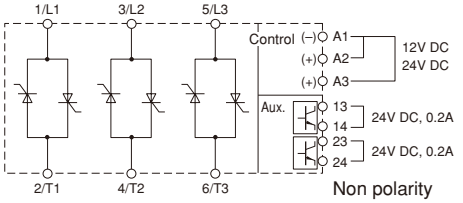

Non polarity

SS□-3

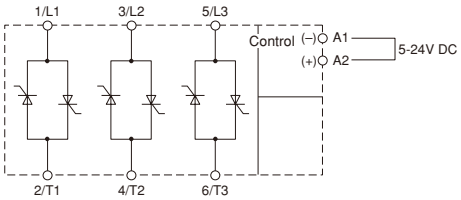

SS□-4

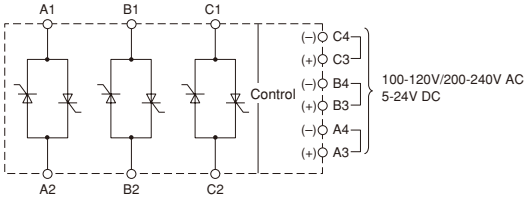

■ Precautions for use

Be sure to read an Instruction Manual enclosed with the solid state relays before using in order to ensure proper operation.

Magnetic Contactors and Starters
UL and CSA approved

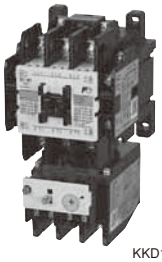
KKD17-097
SW-N1

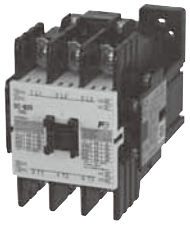
KKD17-096
SC-N3

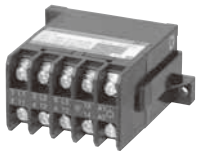
KKD06-052
FC-0UL

■ Ordering information

Specify the following:
1. Ordering code
2. Overload relay setting range code
3. Operating coil voltage code

UL [File No. E42419, E44592], **CSA**
Non reversing contactors (Open type)

Frame size	Max. motor capacity (HP) 200V	220V 240V	440V 480V	550V 600V	Rated conti-nuous current	Aux. contact NO	NC	AC operated Type	Ordering code	UL LISTED	DC operated Type	Ordering code	UL LISTED
03	2	2	5	5	11A	1	–[*1]	**SC-03**	SC11AA-■10	●	**SC-03/G**	SC11AG-■10	●
0	3	3	5	5	13A	1	–[*1]	**SC-0**	SC13AA-■10	●	**SC-0/G**	SC13AG-■10	●
05	3	3	5	5	13A	1	1[*2]	**SC-05**	SC14AA-■11	●	**SC-05/G**	SC14AG-■11	●
4-0	5	5	7.5	7.5	20A	1	–[*1]	**SC-4-0**	SC18AA-■10	●	**SC-4-0/G**	SC18AG-■10	●
4-1	5	5	10	10	20A	1	–[*1]	**SC-4-1**	SC19AA-■10	●	**SC-4-1/G**	SC19AG-■10	●
5-1	5	5	10	10	20A	1	1[*3]	**SC-5-1**	SC20AA-■11	●	**SC-5-1/G**	SC20AG-■11	●
N1	7.5	10	25	25	50A	2	2[*4]	**SC-N1**	SC25BAA-■22	●	**SC-N1/G**	SC25BAG-■22	●
N2	10	15	30	30	60A	2	2[*4]	**SC-N2**	SC35BAA-■22	●	**SC-N2/G**	SC35BAG-■22	●
N2S	15	20	40	40	80A	2	2[*4]	**SC-N2S**	SC50BAA-■22	●	**SC-N2S/G**	SC50BAG-■22	●
N3	20	25	50	50	100A	2	2[*4]	**SC-N3**	SC65BAA-■22	●	**SC-N3/G**	SC65BAG-■22	●
N4	25	30	60	60	135A	2	2[*4]	**SC-N4**	SC80BAA-■22	●	**SC-N4/G**	SC80BAG-■22	●
N5	30	30	60	75	150A	2	2[*4]	**SC-N5A**	SC93CAA-■22	●	**SC-N5/G**	SC93BAG-■22	●
N6	40	40	75	100	150A	2	2[*4]	**SC-N6**	SC1CBAA-■22	●	**SC-N6**	SC1CBAA-■22	●
N7	50	50	100	125	200A	2	2[*4]	**SC-N7**	SC1FBAA-■22	●	**SC-N7**	SC1FBAA-■22	●
N8	60	60	150	150	260A	2	2[*4]	**SC-N8**	SC1JBAA-■22	●	**SC-N8**	SC1JBAA-■22	●
N10	75	75	150	200	260A	2	2[*4]	**SC-N10**	SC2CBAA-■22	●	**SC-N10**	SC2CBAA-■22	●
N11	100	100	200	250	350A	2	2[*4]	**SC-N11**	SC3ABAA-■22	●	**SC-N11**	SC3ABAA-■22	●
N12	125	150	300	350	450A	2	2[*4]	**SC-N12**	SC4ABAA-■22	●	**SC-N12**	SC4ABAA-■22	●
N14	200	200	500	600	660A	2	2[*4]	**SC-N14**	SC6ABAA-■22	●	**SC-N14**	SC6ABAA-■22	●
N16	250	300	600	700	800A	2	2[*4]	**SC-N16**	SC8ABAA-■22	●	**SC-N16**	SC8ABAA-■22	●
N1	7.5	10	25	25	50A	2	2[*4]	**SC-N1/SE**	SC25BAS-■22	●	**SC-N1/SE**	SC25BAS-■22	●
N2	10	15	30	30	60A	2	2[*4]	**SC-N2/SE**	SC35BAS-■22	●	**SC-N2/SE**	SC35BAS-■22	●
N2S	15	20	40	40	80A	2	2[*4]	**SC-N2S/SE**	SC50BAS-■22	●	**SC-N2S/SE**	SC50BAS-■22	●
N3	20	25	50	50	100A	2	2[*4]	**SC-N3/SE**	SC65BAS-■22	●	**SC-N3/SE**	SC65BAS-■22	●
N4	25	30	60	60	135A	2	2[*4]	**SC-N4/SE**	SC80BAS-■22	●	**SC-N4/SE**	SC80BAS-■22	●
N5	30	30	60	75	150A	2	2[*4]	**SC-N5**	SC93BAA-■22	●	**SC-N5**	SC93BAA-■22	●

Notes: ● Available
■ Coil voltage code

[*1] Auxiliary contact 1NC is available on request.
[*2] Auxiliary contact 2NO or 2NC is available on request.
[*3] Auxiliary contact 2NO or 2NC or 2NO+2NC is available on request.
[*4] Auxiliary contact 4NO+4NC is available on request for frame sizes N1 and above.

Magnetic Contactors and Starters UL and CSA approved

Non reversing starters (Open type)

Frame size	Max. motor capacity (HP) 200V	220V 240V	440V 480V	550V 600V	Aux. contact NO	NC	AC operated Type	Ordering code	UL LISTED	DC operated Type	Ordering code	UL LISTED
03	2	2	5	5	1	–*1	**SW-03/3H**	SC11AAN-■10T□D	●	**SW-03/G3H**	SC11AGN-■10T□D	●
0	3	3	5	5	1	–*1	**SW-0/3H**	SC13AAN-■10T□D	●	**SW-0/G3H**	SC13AGN-■10T□D	●
05	3	3	5	5	1	1*2	**SW-05/3H**	SC14AAN-■11T□D	●	**SW-05/G3H**	SC14AGN-■11T□D	●
4-0	5	5	7.5	7.5	1	–*1	**SW-4-0/3H**	SC18AAN-■10T□D	●	**SW-4-0/G3H**	SC18AGN-■10T□D	●
4-1	5	5	10	10	1	–*1	**SW-4-1/3H**	SC19AAN-■10T□D	●	**SW-4-1/G3H**	SC19AGN-■10T□D	●
5-1	5	5	10	10	1	1*3	**SW-5-1/3H**	SC20AAN-■11T□D	●	**SW-5-1/G3H**	SC20AGN-■10T□D	●
N1	7.5	10	25	25	2	2*4	**SW-N1/3H**	SC25BAAN-■22T□D	●	**SW-N1/G3H**	SC25BAGN-■10T□D	●
N2	10	15	30	30	2	2*4	**SW-N2/3H**	SC35BAAN-■22T□D	●	**SW-N2/G3H**	SC35BAGN-■10T□D	●
N2S	15	20	40	40	2	2*4	**SW-N2S/3H**	SC50BAAN-■22T□D	●	**SW-N2S/G3H**	SC50BAGN-■10T□D	●
N3	20	25	50	50	2	2*4	**SW-N3/3H**	SC65BAAN-■22T□D	●	**SW-N3/G3H**	SC65BAGN-■10T□D	●
N4	25	30	60	60	2	2*4	**SW-N4/3H**	SC80BAAN-■22T□	●	**SW-N4/G3H**	SC80BAGN-■22T□D	●
N5	30	30	60	75	2	2*4	**SW-N5A/3H**	SC93CAAN-■22T□	●	**SW-N5/G3H**	SC93BAGN-■22T□D	●
N6	40	40	75	100	2	2*4	**SW-N6/3H**	SC1CBAAN-■22T□	●	**SW-N6/3H**	SC1CBAAN-■22T□	●
N7	50	50	100	125	2	2*4	**SW-N7/3H**	SC1FBAAN-■22T□	●	**SW-N7/3H**	SC1FBAAN-■22T□	●
N8	60	60	150	150	2	2*4	**SW-N8/3H**	SC1JBAAN-■22T□	●	**SW-N8/3H**	SC1JBAAN-■22T□	●
N10	75	75	150	200	2	2*4	**SW-N10/3H**	SC2CBAAN-■22T□	●	**SW-N10/3H**	SC2CBAAN-■22T□	●
N11	100	100	200	250	2	2*4	**SW-N11/3H**	SC3ABAAN-■22T□	●	**SW-N11/3H**	SC3ABAAN-■22T□	●
N12	125	150	300	350	2	2*4	**SW-N12/3H**	SC4ABAAN-■22T□	●	**SW-N12/3H**	SC4ABAAN-■22T□	●
N14	200	200	500	600	2	2*4	**SW-N14/3H**	SC6ABAAN-■22T□	●	**SW-N14/3H**	SC6ABAAN-■22T□	●
N1	7.5	10	25	25	2	2*4	**SW-N1/SE3H**	SC25BASN-■22T□	●	**SW-N1/SE3H**	SC25BASN-■22T□	●
N2	10	15	30	30	2	2*4	**SW-N2/SE3H**	SC35BASN-■22T□	●	**SW-N2/SE3H**	SC35BASN-■22T□	●
N2S	15	20	40	40	2	2*4	**SW-N2S/SE3H**	SC50BASN-■22T□	●	**SW-N2S/SE3H**	SC50BASN-■22T□	●
N3	20	25	50	50	2	2*4	**SW-N3/SE3H**	SC65BASN-■22T□	●	**SW-N3/SE3H**	SC65BASN-■22T□	●
N4	25	30	60	60	2	2*4	**SW-N4/SE3H**	SC80BASN-■22T□D	●	**SW-N4/SE3H**	SC80BASN-■22T□D	●
N5	30	30	60	75	2	2*4	**SW-N5/3H**	SC93BAAN-■22T□D	●	**SW-N5/3H**	SC93BAAN-■22□D	●

Notes: ● Available
■ Coil voltage code
□ Thermal overload relay ampere setting range code

*1 Auxiliary contact 1NC is available on request.
*2 Auxiliary contact 2NO or 2NC is available on request.
*3 Auxiliary contact 2NO or 2NC or 2NO+2NC is available on request.
*4 Auxiliary contact 4NO+4NC is available on request for frame sizes N1 and above.

Non reversing starters with phase-loss protective device (Open type)

Frame size	Max. motor capacity (HP) 200V	220V 240V	440V 480V	550V 600V	Rated continuous current	Aux. contact NO	NC	AC operated Type	Ordering code	UL LISTED	DC operated Type	Ordering code	UL LISTED
03	2	2	5	5	11A	1	–*1	**SW-03/2E**	SC11AAE-■10T□	●	**SW-03/G2E**	SC11AGE-■10T□	●
0	3	3	5	5	13A	1	–*1	**SW-0/2E**	SC13AAE-■10T□	●	**SW-0/G2E**	SC13AGE-■10T□	●
05	3	3	5	5	13A	1	1*2	**SW-05/2E**	SC14AAE-■11T□	●	**SW-05/G2E**	SC14AGE-■11T□	●
4-0	5	5	7.5	7.5	20A	1	–*1	**SW-4-0/2E**	SC18AAE-■10T□	●	**SW-4-0/G2E**	SC18AGE-■10T□	●
4-1	5	5	10	10	20A	1	–*1	**SW-4-1/2E**	SC19AAE-■10T□	●	**SW-4-1/G2E**	SC19AGE-■10T□	●
5-1	5	5	10	10	20A	1	1*3	**SW-5-1/2E**	SC20AAE-■11T□	●	**SW-5-1/G2E**	SC20AGE-■10T□	●
N1	7.5	10	25	25	50A	2	2*4	**SW-N1/2E**	SC25BAAE-■22T□	●	**SW-N1/G2E**	SC25BAGE-■22T□	●
N2	10	15	30	30	60A	2	2*4	**SW-N2/2E**	SC35BAAE-■22T□	●	**SW-N2/G2E**	SC35BAGE-■22T□	●
N2S	15	20	40	40	80A	2	2*4	**SW-N2S/2E**	SC50BAAE-■22T□	●	**SW-N2S/G2E**	SC50BAGE-■22T□	●
N3	20	25	50	50	100A	2	2*4	**SW-N3/2E**	SC65BAAE-■22T□	●	**SW-N3/G2E**	SC65BAGE-■22T□	●
N4	25	30	60	60	135A	2	2*4	**SW-N4/2E**	SC80BAAE-■22T□	●	**SW-N4/G2E**	SC80BAGE-■22T□	●
N5	30	30	60	75	150A	2	2*4	**SW-N5A/2E**	SC93CAAE-■22T□	●	**SW-N5/G2E**	SC93BAGE-■22T□	●
N6	40	40	75	100	150A	2	2*4	**SW-N6/2E**	SC1CBAAE-■22T□	●	**SW-N6/2E**	SC1CBAAE-■22T□	●
N7	50	50	100	125	200A	2	2*4	**SW-N7/2E**	SC1FBAAE-■22T□	●	**SW-N7/2E**	SC1FBAAE-■22T□	●
N8	60	60	150	150	260A	2	2*4	**SW-N8/2E**	SC1JBAAE-■22T□	●	**SW-N8/2E**	SC1JBAAE-■22T□	●
N10	75	75	150	200	260A	2	2*4	**SW-N10/2E**	SC2CBAAE-■22T□	●	**SW-N10/2E**	SC2CBAAE-■22T□	●
N11	100	100	200	250	350A	2	2*4	**SW-N11/2E**	SC3ABAAE-■22T□	●	**SW-N11/2E**	SC3ABAAE-■22T□	●
N12	125	150	300	350	450A	2	2*4	**SW-N12/2E**	SC4ABAAE-■22T□	●	**SW-N12/2E**	SC4ABAAE-■22T□	●
N14	200	200	500	600	660A	2	2*4	**SW-N14/2E**	SC6ABAAE-■22T□	●	**SW-N14/2E**	SC6ABAAE-■22T□	●
N1	7.5	10	25	25	50A	2	2*4	**SW-N1/SE2E**	SC25BASE-■22T□	●	**SW-N1/SE2E**	SC25BASE-■22T□	●
N2	10	15	30	30	60A	2	2*4	**SW-N2/SE2E**	SC35BASE-■22T□	●	**SW-N2/SE2E**	SC35BASE-■22T□	●
N2S	15	20	40	40	80A	2	2*4	**SW-N2S/SE2E**	SC50BASE-■22T□	●	**SW-N2S/SE2E**	SC50BASE-■22T□	●
N3	20	25	50	50	100A	2	2*4	**SW-N3/SE2E**	SC65BASE-■22T□	●	**SW-N3/SE2E**	SC65BASE-■22T□	●
N4	25	30	60	60	135A	2	2*4	**SW-N4/SE2E**	SC80BASE-■22T□	●	**SW-N4/SE2E**	SC80BASE-■22T□	●
N5	30	30	60	75	150A	2	2*4	**SW-N5/2E**	SC93BAAE-■22T□	●	**SW-N5/2E**	SC93BAAE-■22T□	●

Notes: ● Available
■ Coil voltage code
□ Thermal overload relay ampere setting range code

*1 Auxiliary contact 1NC is available on request.
*2 Auxiliary contact 2NO or 2NC is available on request.
*3 Auxiliary contact 2NO or 2NC or 2NO+2NC is available on request.
*4 Auxiliary contact 4NO+4NC is available on request for frame sizes N1 and above.

Reversing contactors and starters (Open type)

Auxiliary contact NO	Auxiliary contact NC	Contactor AC operated Type	Ordering code	Starter Standard Type	Ordering code	With phase-loss protective device Type	Ordering code	Approved
–	2 *1	**SC-03RM**	SC11RA-■01	**SW-03RM/3H**	SC11RAN-■01T□D	**SW-03RM/2E**	SC11RAE-■01T□	●
–	2 *1	**SC-0RM**	SC13RA-■01	**SW-0RM/3H**	SC13RAN-■01T□D	**SW-0RM/2E**	SC13RAE-■01T□	●
2	2 *2	**SC-05RM**	SC14RA-■11	**SW-05RM/3H**	SC14RAN-■11T□D	**SW-05RM/2E**	SC14RAE-■11T□	●
–	2 *1	**SC-4-0RM**	SC18RA-■01	**SW-4-0RM/3H**	SC18RAN-■01T□D	**SW-4-0RM/2E**	SC18RAE-■01T□	●
–	2 *1	**SC-4-1RM**	SC19RA-■01	**SW-4-1RM/3H**	SC19RAN-■01T□D	**SW-4-1RM/2E**	SC19RAE-■01T□	●
2	2 *3	**SC-5-1RM**	SC20RA-■11	**SW-5-1RM/3H**	SC20RAN-■11T□D	**SW-5-1RM/2E**	SC20RAE-■11T□	●
4	4 *4	**SC-N1RM**	SC25BRA-■22	**SW-N1RM/3H**	SC25BRAN-■22T□D	**SW-N1RM/2E**	SC25BRAE-■22T□	●
4	4 *4	**SC-N2RM**	SC35BRA-■22	**SW-N2RM/3H**	SC35BRAN-■22T□D	**SW-N2RM/2E**	SC35BRAE-■22T□	●
4	4 *4	**SC-N2SRM**	SC50BRA-■22	**SW-N2SRM/3H**	SC50BRAN-■22T□D	**SW-N2SRM/2E**	SC50BRAE-■22T□	●
4	4 *4	**SC-N3RM**	SC65BRA-■22	**SW-N3RM/3H**	SC65BRAN-■22T□D	**SW-N3RM/2E**	SC65BRAE-■22T□	●
4	4 *4	**SC-N4RM**	SC80BRA-■22	**SW-N4RM/3H**	SC80BRAN-■22T□	**SW-N4RM/2E**	SC80BRAE-■22T□	●
4	4 *4	**SC-N5ARM**	SC93CRA-■22	**SW-N5ARM/3H**	SC93CRAN-■22T□	**SW-N5ARM/2E**	SC93CRAE-■22T□	●
4	4 *4	**SC-N6RM**	SC1CBRA-■22	**SW-N6RM/3H**	SC1CBRAN-■22T□	**SW-N6RM/2E**	SC1CBRAE-■22T□	●
4	4 *4	**SC-N7RM**	SC1FBRA-■22	**SW-N7RM/3H**	SC1FBRAN-■22T□	**SW-N7RM/2E**	SC1FBRAE-■22T□	●
4	4 *4	**SC-N8RM**	SC1JBRA-■22	**SW-N8RM/3H**	SC1JBRAN-■22T□	**SW-N8RM/2E**	SC1JBRAE-■22T□	●
4	4 *4	**SC-N10RM**	SC2CBRA-■22	**SW-N10RM/3H**	SC2CBRAN-■22T□	**SW-N10RM/2E**	SC2CBRAE-■22T□	●
4	4 *4	**SC-N11RM**	SC3ABRA-■22	**SW-N11RM/3H**	SC3ABRAN-■22T□	**SW-N11RM/2E**	SC3ABRAE-■22T□	●
4	4 *4	**SC-N12RM**	SC4ABRA-■22	**SW-N12RM/3H**	SC4ABRAN-■22T□	**SW-N12RM/2E**	SC4ABRAE-■22T□	●
4	4 *4	**SC-N14RM**	SC6ABRA-■22	**SW-N14RM/3H**	SC6ABRAN-■22T□	**SW-N14RM/2E**	SC6ABRAE-■22T□	●

Notes: ● Available
■ Coil voltage code
□ Thermal overload relay ampere setting range code

Ratings are same as non-reversing types.
*1 Auxiliary contact 2NO is available on request.
*2 Auxiliary contact 4NC is available on request.
*3 Auxiliary contact 4NC, 4NO+4NC is available on request.
*4 Auxiliary contact 6NO+6NC is available on request.

● Coil characteristics

Frame size 03 to N5A

Coil operating voltage				Code
24V	50Hz /	24–26V	60Hz	**E**
48V	50Hz /	48–52V	60Hz	**F**
100V	50Hz /	100–110V	60Hz	**1**
100–110V	50Hz /	110–120V	60Hz	**H**
110–120V	50Hz /	120–130V	60Hz	**K**
200V	50Hz /	200–220V	60Hz	**2**
200–220V	50Hz /	220–240V	60Hz	**M**
220–240V	50Hz /	240–260V	60Hz	**P**
346–380V	50Hz /	380–420V	60Hz	**S**
380–400V	50Hz /	400–440V	60Hz	**4**
415–440V	50Hz /	440–480V	60Hz	**T**
480–500V	50Hz /	500–550V	60Hz	**5**

Note: Other voltages are available in 24–600V AC range on request.

Frame size N1/SE to N4/SE, N5 to N16

Coil operating voltage AC		DC	Code
24–25V	50/60Hz	24V	**E**
48–50V	50/60Hz	48V	**F**
100–127V	50/60Hz	100–120V	**1**
200–250V	50/60Hz	200–240V	**2**
380–450V	50/60Hz	—	**4**

Notes: • Be careful of these voltages because they are different from the standard range.
• 24V and 48V is not available for N14 and 16 .

Frame size 03/G to N5/G

Coil operating voltage DC	Code
12V	**B**
24V	**E**
48V	**F**
60V	**G**
100V	**1**
110V	**H**
120V	**K**
200V	**2**
210V	**Y**
220V	**M**

Note: Other voltages are available in 12–250V DC range on request.

Magnetic Contactors and Starters UL and CSA approved

Thermal overload relays

Standard type Type	Ordering code	With phase-loss protective device Type	Ordering code	Setting range (A)	Reset	Combined motor starter Standard	With phase-loss protective device
TR-0N/3	TR13DW-☐	**TK-0N**	TR13EW-☐	0.1–0.15, 0.13–0.2, 0.15–0.24, 0.2–0.3 0.24–0.36, 0.3–0.45, 0.36–0.54, 0.48–0.72 0.64–0.96, 0.8–1.2, 0.95–1.45, 1.4–2.2 1.7–2.6, 2.2–3.4, 2.8–4.2, 4–6, 5–8, 6–9 7–11	Manual/auto	SW-03/3H SW-0/3H SW-05/3H	SW-03/2E SW-0/2E SW-05/2E
–		**TK13**	TK13-☐	0.1–0.15, 0.13–0.2, 0.18–0.27, 0.24–0.36, 0.34–0.52, 0.48–0.72, 0.64–0.96, 0.8–1.2, 0.95–1.45, 1.1–1.65, 1.4–2.1, 1.7–2.6, 2.2–3.4, 2.8–4.2, 4–6, 5–7.5, 6–9, 7–10.5, 9–13	Manual/auto	–	
TR-5-1N/3	TR20DW-☐	**TK-5-1N**	TR20EW-☐	0.1–0.15, 0.13–0.2, 0.15–0.24, 0.2–0.3 0.24–0.36, 0.3–0.45, 0.36–0.54 0.48–0.72, 0.64–0.96, 0.8–1.2, 0.95–1.45 1.4–2.2, 1.7–2.6, 2.2–3.4, 2.8–4.2, 4–6 5–8, 6–9, 7–11, 9–13, 12–18	Manual/auto	SW-4-0/3H SW-4-1/3H SW-5-1/3H	SW-4-0/2E SW-4-1/2E SW-5-1/2E
–		**TK26**	TK26-☐	0.1–0.15, 0.13–0.2, 0.18–0.27, 0.24–0.36, 0.34–0.52, 0.48–0.72, 0.64–0.96, 0.8–1.2, 0.95–1.45, 1.1–1.65, 1.4–2.1, 1.7–2.6, 2.2–3.4, 2.8–4.2, 4–6, 5–7.5, 6–9, 7–10.5, 9–13, 12–18, 16–22, 20–26	Manual/auto	–	
TR-N2/3	TR35BDW-☐	**TK-N2**	TR35BEW-☐	4–6, 5–8, 6–9, 7–11, 9–13, 12–18 18–26, 24–36, 32–42	Manual/auto	SW-N1/3H	SW-N1/2E
TR-N2H/3*	TR35BDH-☐	**TK-N2H***	TR35BEH-☐			SW-N2/3H	SW-N2/2E
TR-N3/3	TR65BDW-☐	**TK-N3**	TR65BEW-☐	7–11, 9–13, 12–18, 18–26, 24–36 28–40, 34–50, 45–65, 48–68	Manual/auto	SW-N2S/3H	SW-N2S/2E
TR-N3H/3*	TR65BDH-☐	**TK-N3H***	TR65BEH-☐			SW-N3/3H	SW-N3/2E
TR-N5/3	TR93BDW-☐	**TK-N5**	TR93BEW-☐	7–11, 9–13, 12–18, 18–26, 24–36, 28–40 34–50, 45–65, 53–80, 65–95	Manual/auto	SW-N4/3H	SW-N4/2E
						SW-N5A/3H	SW-N5A/2E
TR-N6/3	TR1CBDW-☐	**TK-N6**	TR1CBEW-☐	45–65, 53–80, 65–95, 85–125	Manual/auto	SW-N6/3H	SW-N6/2E
TR-N6H/3*	TR1CBDH-☐	**TK-N6H***	TR1CBEH-☐				
TR-N7/3	TR1FBDW-☐	**TK-N7**	TR1FBEW-☐	45–65, 53–80, 65–95, 85–125, 110–160	Manual/auto	SW-N7/3H	SW-N7/2E
TR-N8/3	TR1JBDW-☐	**TK-N8**	TR1JBEW-☐	53–80, 65–95, 85–125, 110–160, 125–185	Manual/auto	SW-N8/3H	SW-N8/2E
TR-N10/3	TR2CBDW-☐	**TK-10N**	TR2CBEW-☐	85–125, 110–160, 125–185, 160–240	Manual/auto	SW-N10/3H	SW-N10/2E
TR-N10H/3*	TR2CBDH-☐	**TK-10NH***	TR2CBEH-☐				
TR-N12/3	TR4ABDW-☐	**TK-12N**	TR4ABEW-☐	110–160, 125–185, 160–240, 200–300, 240–360, 300–450	Manual/auto	SW-N11/3H	SW-N11/2E
TR-N12H/3*	TR4ABDH-☐	**TK-12NH***	TR4ABEH-☐			SW-N12/3H	SW-N12/2E
TR-N14/3	TR6ABDW-☐	**TK-14N**	TR6ABEW-☐	240–360, 300–450, 400–600	Manual/auto	SW-N14/3H	SW-N14/2E
TR-N14H/3*	TR6ABDH-☐	**TK-14NH***	TR6ABEH-☐				

Notes: ☐ Enter the thermal overload relay ampere setting range code
*Separate mounting type
•Auxiliary contact: 1NO+1NC
•UL recognized

• Max. setting ranges of these starters are as follows.

Starter	Max. setting range	Starter	Max. setting range
SW-03	5–8A	**SW-N1**	24–36A
SW-N2S	45–65A	**SW-N4**	53–80A

● Auxiliary contact ratings

Contactors

Frame size	Continuous current (A)	AC	Make/Break (A)	DC	Make/Break (A)
SC-03 to N14	10	120V 240V 480V 600V	60/6 30/3 15/1.5 12/1.2	125V 250V	0.55/0.55 0.27/0.27

Thermal overload relays

Frame	Continuous current (A)	AC	Make/Break (A)	DC	Make/Break (A)
TR-0N/3 to 5-1N/3 TK-0N to 5-1N	2.5	120V 240V 480V 600V	15/1.5 7.5/0.75 3.75/0.375 3/0.3	125V 250V	0.22A/0.22 0.11A/0.11
TR-N2/3 to N14/3 TK-N2 to N14 TK13, TK26	5	120V 240V 480V 600V	30/3 15/1.5 7.5/0.75 6/0.6	125V 250V	0.22A/0.22 0.11A/0.11

● Thermal overload relays

Ampere setting ranges and codes (0N to N14)

Ampere setting range (A)	Code	Ampere setting range (A)	Code	Ampere setting range (A)	Code
0.1 - 0.15	**A**	4 - 6	**S**	65 - 95	**M**
0.13 - 0.2	**B**	5 - 8	**T**	85 - 105	**I**
0.15 - 0.24	**C**	6 - 9	**U**	85 - 125	**N**
0.2 - 0.3	**D**	7 - 11	**V**	110 - 160	**P**
0.24 - 0.36	**E**	9 - 13	**W**	125 - 185	**R**
0.3 - 0.45	**F**	12 - 18	**X**	160 - 240	**S**
0.36 - 0.54	**G**	16 - 22	**Q**	200 - 300	**T**
0.48 - 0.72	**H**	18 - 26	**B**	240 - 360	**U**
0.64 - 0.96	**J**	24 - 36	**E**	300 - 450	**V**
0.8 - 1.2	**K**	28 - 40	**F**	400 - 600	**W**
0.95 - 1.45	**L**	32 - 42	**I**		
1.4 - 2.2	**M**	34 - 50	**G**		
1.7 - 2.6	**N**	45 - 65	**J**		
2.2 - 3.4	**P**	48 - 68	**O**		
2.8 - 4.2	**R**	53 - 80	**L**		

● Dimensions

See page A1-26 for standard contactor and starter.
See page A1-35 for reversing contactor and starter.
See page A1-42 for DC operated contactor.

See page A1-93 for thermal overload relay.

● Thermal overload relays

Ampere setting ranges and codes (TK13, TK26)

Ampere setting range (A)	Code	Ampere setting range (A)	Code	Ampere setting range (A)	Code
0.1 - 0.15	**P10**	1.4 - 2.1	**1P4**	16 - 22	**016**
0.13 - 0.2	**P13**	1.7 - 2.6	**1P7**	20 - 26	**020**
0.18 - 0.27	**P18**	2.2 - 3.4	**2P2**		
0.24 - 0.36	**P24**	2.8 - 4.2	**2P8**		
0.34 - 0.52	**P34**	4 - 6	**004**		
0.48 - 0.72	**P48**	5 - 7.5	**005**		
0.64 - 0.96	**P64**	6 - 9	**006**		
0.8 - 1.2	**P80**	7 - 10.5	**007**		
0.95 - 1.45	**P95**	9 - 13	**009**		
1.1 - 1.65	**1P1**	12 - 18	**012**		

DC contactor SB series **UL** [File No. E42419], **CSA** [File No. LR20479]

Type	Ordering code	Main contact arrangement	Current ratings (A) Res. load							
			No contacts (2-pole in series)				NC contacts			
			120V	240V	440V	600V	120V	240V	440V	600V
SB-N2	SB35CAA-■□	2NO	50	50	35	35				
SB-N2	SB35CBA-■□	2NO+1NC	50	50	35	35	50	50	35	20
SB-N2/SE	SB35CAS-■□	2NO	50	50	35	35				
SB-N2/SE	SB35CBS-■□	2NO+1NC	50	50	35	35	50	50	35	20

Type	Ordering code	Main contact arrangement	Current ratings (A) Variable-speed motor control				DC motor control (DC2, class4)				Continuous current (A)	
			2NO (in series)*1		1NC (dynamic brake)*2		2NO (in series)					
			110V/240V	440V/500V	110V/240V	440V/500V	110V	240V	440V	500V	NO	NC
SB-5N/UL	SB851BA-■□	2NO	110	110	165	165	85	85	60	45	110	110
SB-5NB/UL	SB851BB-■□	2NO+1NC										
SB-6N/UL	SB1C1BA-■□	2NO	140	140	210	210	125	120	80	50	140	100
SB-6NB/UL	SB1C1BB-■□	2NO+1NC										
SB-10N/UL	SB2A1BA-■□	2NO	240	240	360	360	240	200	120	100	240	160
SB-10NB/UL	SB2A1BB-■□	2NO+1NC										
SB-11N/UL	SB2K1BA-■□	2NO	320	320	480	480	320	290	200	150	320	200
SB-11NB/UL	SB2K1BB-■□	2NO+1NC										

Notes:
- Enter the coil voltage code in the ■ mark.
- Enter the auxiliary contact arrangement in the □ mark.
- 22: 2NO+2NC (standard), 33: 3NO+3NC (on request), 44: 4NO+4NC (on request)

*1 NO contacts are capable of making 2 times of listed current ratings.
*2 NC contacts are capable of making 1 time of listed current ratings.

- On-load factor is 50%, operating cycle is 600 cycles per hour.
- Breaking condition : No voltage

● Dimensions

Same as standard type
See page A1-79.

Magnetic Contactors and Starters UL and CSA approved

● Auxiliary contact ratings

Rating code	Continuous current (A)	Current ratings (A) Voltage	Make	Break
A600	10	120V AC	60	6
		240V AC	30	3
		480V AC	15	1.5
		600V AC	12	1.2
Q300	10	125V DC	0.55	0.55
		250V DC	0.27	0.27

Optional units UL[File No. E42419], CSA [File No. LR20479]

Description		Type	Ordering code		Used with
Auxiliary contact block	Front mounting	**SZ-A40**	SZ1A40	4NO	SC-03 to 5-1
		SZ-A31	SZ1A31	3NO+1NC	SH-4,5
		SZ-A22	SZ1A22	2NO+2NC	SC-N1 to N3
		SZ-A20	SZ1A20	2NO	
		SZ-A11	SZ1A11	1NO+1NC	
		SZ-A02	SZ1A02	2NC	
	Side mounting	**SZ-AS1**	SZ1AS1	1NO+1NC	SC-03 to N3
		SZ-AS2	SZ1AS2	1NO+1NC	SC-N4 to N12
Mechanical interlock unit		**SZ-RM**	SZ1RM		SC-03 to 5-1 SC-N1 to N3
Coil surge suppression unit	Varistor	**SZ-Z1**	SZ1Z1	24 to 48V AC/DC	SC-03 to 5-1
		SZ-Z2	SZ1Z2	100 to 250V AC/DC	SH-4, 5
		SZ-Z3	SZ1Z3	380 to 440V AC/DC	
		SZ-Z6[*2]	SZ1Z6	24 to 48V AC/DC	
		SZ-Z7[*2]	SZ1Z7	100 to 250V AC/DC	
		SZ-Z31	SZ2Z31	24 to 48V AC/DC	SC-N1 to N3
		SZ-Z32	SZ2Z32	100 to 250V AC/DC	SC-N1/G to N3/G
		SZ-Z33	SZ2Z33	380 to 440V AC/DC	SC-N1 to N3
		SZ-Z41	SZ2Z41	24 to 48V AC	SC-N4, N5A
		SZ-Z42	SZ2Z42	100 to 250V AC	
		SZ-Z43	SZ2Z43	380 to 440V AC	
	CR	**SZ-Z4**	SZ1Z4	24 to 48V AC/DC	SC-03 to 5-1
		SZ-Z5	SZ1Z5	100 to 250V AC/DC	SH-4, 5
		SZ-Z8[*2]	SZ1Z8	24 to 48V AC/DC	
		SZ-Z9[*2]	SZ1Z9	100 to 250V AC/DC	
		SZ-Z34	SZ2Z34	24 to 48V AC	SC-N1 to N3
		SZ-Z35	SZ2Z35	100 to 250V AC	
		SZ-Z36	SZ2Z36	24 to 48V DC	SC-N1/G to N3/G
		SZ-Z37	SZ2Z37	100 to 250V DC	
		SZ-Z44	SZ2Z44	24 to 48V AC	SC-N4, N5A
		SZ-Z45	SZ2Z45	100 to 250V AC	

Notes: *1 Overlapping
*2 With LED

Description		Type	Ordering code	Used with
Main circuit surge suppression unit		**SZ-ZM1**	SZ1ZM1	SC-03 to 5-1
		SZ-ZM2	SZ1ZM2	SC-03 to 5-1
		SZ-ZM3	SZ1ZM3	SC-N1 to N3
		SZ-ZM4	SZ1ZM4	SC-N1 to N3
Terminal cover	For contactor and industrial relay	**SZ-T1**	SZ1T1	SC-03, 0, SH-4
		SZ-T2	SZ1T2	SC-05, SH-5
		SZ-T3	SZ1T3	SC-4-0, 4-1
		SZ-T4	SZ1T4	SC-5-1
		SZ-T22	SZ2T22	SC-N1, N2
		SZ-T23	SZ2T23	SC-N2S, N3
		SZ-N4T	SZ2N4T	SC-N4, N5, SW-N4/3H,N5A/3H
		SZ-N6T	SZ2N6T	SC-N6, SW-N6/3H
		SZ-N7T	SZ2N7T	SC-N7, SW-N7/3H
		SZ-N8T	SZ2N8T	SC-N8, N10, SW-N8/3H, N10/3H
		SZ-Z11T	SZ2N11T	SC-N11, N12, SW-N11/3H, N12/3H
		SZ-WN4T	SZ2WN7T	SW-N4/3H,N5A/3H
		SZ-WN6T	SZ2WN7T	SW-N6/3H
		SZ-WN7T	SZ2WN7T	SW-N7/3H
		SZ-WN8T	SZ2WN7T	SW-N8/3H
		SZ-WN10T	SZ2WN7T	SW-N10/3H
		SZ-WZ11T	SZ2WN7T	SW-N11/3H, N12/3H
	For auxiliary contact block	**SZ-T5**	SZ1T5	SZ-A40, SZ-A31, SZ-A22
		SZ-T6	SZ1T6	SZ-A20, SZ-A11, SZ-A02
		SZ-T7	SZ1T7	SZ-AS1, SZ-AS2
	For thermal overload relay	**SZ-T10**	SZ1T10	SZ-HB
		SZ-T11	SZ1T11	SZ-HC
		SZ-T12	SZ1T12	TR-0N/3, TK-0N
		SZ-T13	SZ1T13	TR-5-1N/3, TK-5-1N
		SZ-T14	SZ2T14	TR-N2H/3, TK-N2H
		SZ-T15	SZ2T15	TR-N3H/3, TK-N3H
		SZ-RN6T	SZ2RN6T	TR-N6H/3, TK-N6H
		SZ-T16	SZ2T16	TR-N2/3, TK-N2
		SZ-T17	SZ2T17	TR-N3/3, TK-N3
Base unit for separate mounting		**SZ-HB**	TZ1HB	TR-0N/3, TK-0N
		SZ-HC	TZ1HC	TR-5-1N/3, TK-5-1N
		SZ-HD	TZ2HD	TR-N2/3, TK-N2
		SZ-HE	TZ2HE	TR-N3/3, TK-N3
		TZ1H13N	TZ1H13N	TK13
		TZ1H26N	TZ1H26N	TK26
Reset release button		**SZ-R1**	TZ1R1	TR-0N/3, TK-0N, TR-5-1N/3
		SZ-R2	TZ1R2	TK-5-1N, TK13, TK26
		SZ-R3	TZ1R3	TR-N10/3 to N14/3, TK-N10 to N14
		SZ-R4	TZ2R4	TR-N2/3 to N8/3
		SZ-R5	TZ2R5	TR-N2 to N8
		SZ-R6	TZ2R6	
Dial cover		**SZ-DA**	SZ1DA	TR-0N/3 to N14/3 TK-0N to TK-N14

Definite purpose contactors **UL** [File No. E42419], **CSA** [File No. LR20479]

Type	Ordering code		Terminal	Auxiliary contact arrangement	Motor capacity (HP) Single-phase 110V 120V	Single-phase 220V 240V	3-phase 200V	3-phase 220V 240V	3-phase 440V 480V	3-phase 550V 600V	Thermal continuous current (A)
FC-0UL	SF12B1A-■10*1	●	Screw	1NO	1/2	1	1	1	–	–	15
FC-0TUL	SF12B3A-■10*1	●	Tab								
FC-0SUL	SF15B1A-■10*1	●	Screw								
FC-0STUL	SF15B3A-■10*1	●	Tab								
FC-1UL	SF20B1A-■11*2	●	Screw	1NO +1NC	1	2	5	5	7.5	7.5	20
FC-1SUL	SF26B1A-■11*2	●	Screw		2	3	5	7.5	10	7.5	26
FC-2SUL	SF38B1A-■11*2	●	Screw		3	5	10	10	15	10	35
FC-3UL	SF50B1A-■11*2	●	Screw		3	7.5	10	15	25	15	45
FC-4UL	SF65B1A-■11*2	●	Screw		5	10	15	20	30	25	65
FC-0/GUL	SF12B1G-■10*1	●	Screw	1NO	1/2	1	1	1	–	–	15
FC-0T/GUL	SF12B3G-■10*1	●	Tab								
FC-0S/GUL	SF15B1G-■10*1	●	Screw								
FC-0ST/GUL	SF15B3G-■10*1	●	Tab								

Notes: *1 1NO is standard, 1NC is also available on request. ● Approved ■ Coil voltage code
*2 1NO+1NC is standard, 2NO or 2NC is also available on request.

Auxiliary contact ratings

Type	Rating code	Thermal continuous current (A)	Current ratings (A) 120V AC Make	120V AC Break	240V AC Make	240V AC Break	480V AC Make	480V AC Break	600V AC Make	600V AC Break	Maximum (VA) Make	Maximum (VA) Break
FC-0UL **FC-0TUL** **FC-0SUL** **FC-0STUL**	B300	5	30	3	15	1.5	–	–	–	–	3600	360
FC-1UL **FC-1SUL** **FC-2SUL** **FC-3UL** **FC-4UL**	A600	10	60	6	30	3	15	1.5	12	1.2	7200	720
FC-0/GUL **FC-0T/GUL** **FC-0S/GUL** **FC-0ST/GUL**	B300	5	30	3	15	1.5	–	–	–	–	3600	360

Operating coil voltage

FC-0UL, 0TUL, 0SUL, 0STUL, 1UL, FC-1SUL, 2SUL, 3UL, 4UL

Voltage and frequency				Code
24V	50Hz/24	– 26V	60Hz	**E**
48V	50Hz/48	– 52V	60Hz	**F**
100V	50Hz/100	– 110V	60Hz	**1**
100 – 110V	50Hz/110	– 120V	60Hz	**H**
110 – 120V	50Hz/120	– 130V	60Hz	**K**
200V	50Hz/200	– 220V	60Hz	**2**
200 – 220V	50Hz/220	– 240V	60Hz	**M**

FC-0/GUL, 0T/GUL FC-0S/GUL, 0ST/GUL

Voltage	Code
24V DC	**E**
48V DC	**F**
100V DC	**1**
110V DC	**H**
200V DC	**2**
220V DC	**M**

■ Dimensions, mm

See page A1-82.

■ Wiring diagrams

FC-0UL, 0TUL, 0/GUL, 0T/GUL FC-0SUL, 0STUL, 0S/GUL, 0ST/GUL

1NO

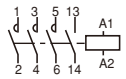

1NO+1NC

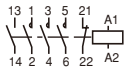

FC-1UL, 1SUL, 2SUL, 3UL, 4UL

1NO+1NC

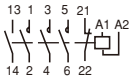

Magnetic Contactors and Starters UL and CSA approved

Solid-state contactors SS series UL [File No. E132864, E142975]

Single pole type

● Main circuit 240V AC, SS101 to SS2001

Type	**SS101-5Z-A3** **SS101-5Z-A4** **SS101-3Z-D3**	**SS201-5Z-A3** **SS201-5Z-A4** **SS201-3Z-D3**	**SS301-5Z-A3** **SS301-5Z-A4** **SS301-3Z-D3**	**SS401-5Z-A3** **SS401-5Z-A4** **SS401-3Z-D3**	**SS501-5Z-A3** **SS501-5Z-A4** **SS501-3Z-D3**
Ordering code	SS101-5ZA3 SS101-5ZA4 SS101-3ZD3	SS201-5ZA3 SS201-5ZA4 SS201-3ZD3	SS301-5ZA3 SS301-5ZA4 SS301-3ZD3	SS401-5ZA3 SS401-5ZA4 SS401-3ZD3	SS501-5ZA3 SS501-5ZA4 SS501-3ZD3
Rated thermal current(A) *	10	20	30	40	50
Control voltage	A3 : 100V-120V AC, A4 : 200-240V AC, D3 : 5-24V DC				

Type	**SS701-1Z-A3** **SS701-1Z-A4** **SS701-3Z-D3**	**SS1001-1Z-A3** **SS1001-1Z-A4** **SS1001-3Z-D3**	**SS1501-1Z-A3** **SS1501-1Z-A4** **SS1501-3Z-D3**	**SS2001-1Z-A3** **SS2001-1Z-A4** **SS2001-3Z-D3**	
Ordering code	SS701-1ZA3 SS701-1ZA4 SS701-3ZD3	SS1A1-1ZA3 SS1A1-1ZA4 SS1A1-3ZD3	SS1F1-1ZA3 SS1F1-1ZA4 SS1F1-3ZD3	SS1A1-1ZA3 SS1A1-1ZA4 SS1A1-3ZD3	
Rated thermal current(A) *	70	100	150	200	
Control voltage	A3 : 100V-120V AC, A4 : 200-240V AC, D3 : 5-24V DC				

● Main circuit 480V AC, SS701H to SS2001H

Type	**SS701H-1Z-A3** **SS701H-1Z-A4** **SS701H-3Z-D3**	**SS1001H-1Z-A3** **SS1001H-1Z-A4** **SS1001H-3Z-D3**	**SS1501H-1Z-A3** **SS1501H-1Z-A4** **SS1501H-3Z-D3**	**SS2001H-1Z-A3** **SS2001H-1Z-A4** **SS2001H-3Z-D3**	
Ordering code	SS701H-1ZA3 SS701H-1ZA4 SS701H-3ZD3	SS1A1H-1ZA3 SS1A1H-1ZA4 SS1A1H-3ZD3	SS1F1H-1ZA3 SS1F1H-1ZA4 SS1F1H-3ZD3	SS1A1H-1ZA3 SS1A1H-1ZA4 SS1A1H-3ZD3	
Rated thermal current(A) *	70	100	150	200	
Control voltage	A3 : 100V-120V AC, A4 : 200-240V AC, D3 : 5-24V DC				

Note: * The values are maximum ratings that apply at an ambient temperature not exceeding 40°C.

3-pole type

● Main circuit 240V AC

Contactor 3-pole, 2-element Basic type	Basic ordering code	3-pole, 3-element Basic type	Basic ordering code	Cooling fin to be combined 3-pole, 2-element Basic type	Basic ordering code	3-pole, 3-element Basic type	Basic ordering code	Continuous current (A)	Motor ratings 3-phase 220V AC 60Hz Capacity (HP)	Full load current (A)
SS032	SS032	**SS033**	SS033	–	–	–	–	3	1/2	2
SS082	SS082	**SS083**	SS083	*	*	*	*	8	3/4	2.9
SS202	SS202	**SS203**	SS203	**SX1-D10**	SY1D0	**SX1-D10**	SY1D0	20	1 1/2	5.2
SS302	SS302	**SS303**	SS303	**SX1-D10**	SY1D0	**SX1-E12**	SY1E2	30	2	5.8
SS402	SS402	**SS403**	SS403	**SX1-D14**	SY1D4	**SX1-E12**	SY1E2	40	3	9.6
SS502	SS502	**SS503**	SS503	**SX1-E12**	SY1E2	**SX1-E17**	SY1E7	50	5	15.2
SS802	SS802	**SS803**	SS803	**SX1-C12**	SY1C2	**SX1-C12**	SY1C2	80	10	28
SS1202	SS1C2	**SS1203**	SS1C3	**SX1-C12**	SY1C2	**SX1-C12**	SY1C2	120	10	28

Note: * Cooling fin provided

● Main circuit 480V AC

Contactor 3-pole, 2-element Basic type	Basic ordering code	3-pole, 3-element Basic type	Basic ordering code	Cooling fin to be combined 3-pole, 2-element Basic type	Basic ordering code	3-pole, 3-element Basic type	Basic ordering code	Continuous current (A)	Motor ratings 3-phase 220V AC 60Hz Capacity (HP)	Full load current (A)
SS302H	SS302H	**SS303H**	SS303H	**SX1-E12**	SY1E2	**SX1-E12**	SY1E2	30	–	–
SS502H	SS502H	**SS503H**	SS503H	**SX1-E12**	SY1E2	**SX1-E17**	SY1E7	50	10	17
SS802H	SS802H	**SS803H**	SS803H	**SX1-C12**	SY1C2	**SX1-C12**	SY1C2	80	20	32.5
SS1202H	SS1C2H	**SS1203H**	SS1C3H	**SX1-C12**	SY1C2	**SX1-C12**	SY1C2	120	20	32.5

● Input voltage

100–120/200–240V AC
100–120V AC
200–240V AC
12/24V DC
12–24V DC
5V DC
5–24V DC

Note: For details, *see page A1-123.*

TÜV approved

■ Description

FUJI contactors and starters introduced in this section are TÜV approved products as they are.

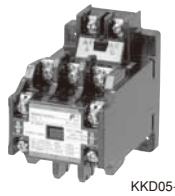
KKD05-265

FC-1UL

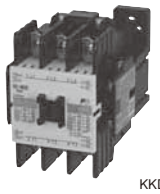
KKD17-096

SC-N3

Contactor SC series

AC operated Type	Ordering code	DC operated Type	Ordering code	Max. motor capacity (kW)*5 3-phase 200V 240V	380V 440V	Rated operational current (A)*5 3-phase 200V 240V	380V 440V	Continuous current (A)	Auxiliary contact NO	NC
SC-03	SC11AA-■10	**SC-03/G**	SC11AG-■10	2.5	4	11	9	20	1	– *1
SC-0	SC13AA-■10	**SC-0/G**	SC13AG-■10	3.5	5.5	13	12	20	1	– *1
SC-05	SC14AA-■11	**SC-05/G**	SC14AG-■11	3.5	5.5	13	12	20	1	1 *2
SC-4-0	SC18AA-■10	**SC-4-0/G**	SC18AG-■10	4.5	7.5	18	16	25	1	– *1
SC-4-1	SC19AA-■10	**SC-4-1/G**	SC19AG-■10	5.5	11	22	22	32	1	– *1
SC-5-1	SC20AA-■11	**SC-5-1/G**	SC20AG-■11	5.5	11	22	22	32	1	1 *3
SC-N1	SC25BAA-■22	**SC-N1/G**	SC25BAG-■22	7.5	15	32	32	50	2	2 *4
SC-N2	SC35BAA-■22	**SC-N2/G**	SC35BAG-■22	11	18.5	40	40	60	2	2 *4
SC-N2S	SC50BAA-■22	**SC-N2S/G**	SC50BAG-■22	15	22	50	50	80	2	2 *4
SC-N3	SC65BAA-■22	**SC-N3/G**	SC65BAG-■22	18.5	30	65	65	100	2	2 *4
SC-N4	SC80BAA-■22	**SC-N4/SE**	SC80BAS-■22	22	40	80	80	135	2	2 *4
SC-N5A	SC93CAA-■22	**SC-N5**	SC93BAA-■22	30	55	105	105	150	2	2 *4
SC-N6	SC1CBAA-■22	**SC-N6**	SC1CBAA-■22	37	60	125	125	150	2	2 *4
SC-N7	SC1FBAA-■22	**SC-N7**	SC1FBAA-■22	45	75	150	150	200	2	2 *4
SC-N8	SC1JBAA-■22	**SC-N8**	SC1JBAA-■22	55	90	180	180	260	2	2 *4
SC-N10	SC2CBAA-■22	**SC-N10**	SC2CBAA-■22	65	110	220	220	260	2	2 *4
SC-N11	SC3ABAA-■22	**SC-N11**	SC3ABAA-■22	90	160	300	300	350	2	2 *4
SC-N12	SC4ABAA-■22	**SC-N12**	SC4ABAA-■22	120	220	400	400	450	2	2 *4
SC-N14	SC6ABAA-■22	**SC-N14**	SC6ABAA-■22	180	315	600	600	660	2	2 *4
SC-N16	SC8ABAA-■22	**SC-N16**	SC8ABAA-■22	220	440	800	800	800	2	2 *4

Notes: *1 Auxiliary contact 1NC is available on request.
*2 Auxiliary contact 2NO or 2NC is available on request.
*3 Auxiliary contact 2NC, 2NO or 2NO+2NC is available on request.
■ Coil voltage code
*4 Auxiliary contact 4NO+4NC is available on request for frame size N1 and above.
*5 Conforming to IEC 60947-4-1 AC-3

Thermal overload relays

Standard Type	Ordering code	2E type Type	Ordering code	Setting current range (A)	Reset	Used with
TR-0N/3 **TR-0NH/3**	TR13DW-□ TR13DH-□	**TK-0N** **TK-0NH**	TR13EW-□ TR13EH-□	0.1–0.15, 0.13–0.2, 0.15–0.24, 0.2–0.3, 0.24–0.36 0.3–0.45, 0.36–0.54, 0.48–0.72, 0.64–0.96, 0.8–1.2 0.95–1.45, 1.4–2.2, 1.7–2.6, 2.2–3.4, 2.8–4.2, 4–6 5–8, 6–9, 7–11, 9–13	Manual/auto	SC-03 SC-0 SC-05
–		**TK13**	TK13-□	0.1–0.15, 0.13–0.2, 0.18–0.27, 0.24–0.36, 0.34–0.52, 0.48–0.72, 0.64–0.96, 0.8–1.2, 0.95–1.45, 1.1–1.65, 1.4–2.1, 1.7–2.6, 2.2–3.4, 2.8–4.2, 4–6, 5–7.5, 6–9, 7–10.5, 9–13	Manual/auto	
TR-5-1N/3 **TR-5-1NH/3**	TR20DW-□ TR20DH-□	**TK-5-1N** **TK-5-1NH**	TR20EW-□ TR20EH-□	0.1–0.15, 0.13–0.2, 0.15–0.24, 0.2–0.3, 0.24–0.36 0.3–0.45, 0.36–0.54, 0.48–0.72, 0.64–0.96, 0.8–1.2 0.95–1.45, 1.4–2.2, 1.7–2.6, 2.2–3.4, 2.8–4.2, 4–6 5–8, 6–9, 7–11, 9–13, 12–18, 16–22	Manual/auto	SC-4-0 SC-4-1 SC-5-1
–		**TK26**	TK26-□	0.1–0.15, 0.13–0.2, 0.18–0.27, 0.24–0.36, 0.34–0.52, 0.48–0.72, 0.64–0.96, 0.8–1.2, 0.95–1.45, 1.1–1.65, 1.4–2.1, 1.7–2.6, 2.2–3.4, 2.8–4.2, 4–6, 5–7.5, 6–9, 7–10.5, 9–13, 12–18, 16–22, 20–26	Manual/auto	
TR-N2/3 **TR-N2H/3**	TR35BDW-□ TR35BDH-□	**TK-N2** **TK-N2H**	TR35BEW-□	4–6, 5–8, 6–9, 7–11, 9–13, 12–18, 18–26 24–36, 32–42	Manual/auto	SC-N1 SC-N2
TR-N3/3 **TR-N3H/3**	TR65BDW-□ TR65BDH-□	**TK-N3** **TK-N3H**	TR65BEW-□	7–11, 9–13, 12–18, 18–26, 24–36, 28–40 34–50, 45–65, 48–68, 53–80, 65–95, 85–105	Manual/auto	SC-N2S SC-N3
TR-N5/3	TR93BDW-□	**TK-N5**	TR93BEW-□ TR93BEH-□	18–26, 24–36, 28–40, 34–50, 45–65, 53–80 65–95, 85–105	Manual/auto	SC-N4 SC-N5A
TR-N6/3 **TR-N6H/3**	TR1CBDW-□ TR1CBDH-□	**TK-N6** **TK-N6H**	TR1CBEW-□ TR1CBEH-□	45–65, 53–80, 65–95, 85–125, 110–160	Manual/auto	SC-N6
TR-N7/3	TR1FBDW-□	**TK-N7**	TR1FBEW-□	45–65, 53–80, 65–95, 85–125,110–160	Manual/auto	SC-N7
TR-N8/3	TR1JBDW-□	**TK-N8**	TR1JBEW-□	65–95, 85–125, 110–160, 125–185	Manual/auto	SC-N8
TR-N10/3 **TR-N10H/3**	TR2CBDW-□ TR2CBDH-□	**TK-N10** **TK-N10H**	TR2CBEW-□ TR2CBEH-□	85–125, 110–160, 125–185, 160–240	Manual/auto	SC-N10
TR-N12/3 **TR-N12H/3**	TR4ABDW-□ TR4ABDH-□	**TK-N12** **TK-N12H**	TR4ABEW-□ TR4ABEH-□	110–160, 125–185, 160–240, 200–300 240–360, 300–450	Manual/auto	SC-N11 SC-N12
TR-N14/3 **TR-N14H/3**	TR6ABDW-□ TR6ABDH-□	**TK-N14** **TK-N14H**	TR6ABEW-□ TR6ABEH-□	240–360, 300–450, 400–600	Manual/auto	SC-N14

Note: □ Thermal overload relay ampere setting range code, *see page A1-123.*

Magnetic Contactors and Starters
TÜV approved

Optional units (Auxiliary contact blocks)

Type	Ordering code	Description	Contact arrangement	Continuous current (A)	Operational current (A) AC-15 100–120V	200–240V	380–440V	500–600V	Used with
SZ-A40	SZ1A40	Front mounting	4NO	10	6	3	1.5	1.2	SC-03 to SC-N3
SZ-A31	SZ1A31		3NO+1NC						
SZ-A22	SZ1A22		2NO+2NC						
SZ-A20	SZ1A20		2NO						
SZ-A11	SZ1A11		1NO+1NC						
SZ-A02	SZ1A02		2NC						
SZ-AS1	SZ1AS1	Side mounting	1NO+1NC						
SZ-AS2	SZ2AS2		1NO+1NC						SC-N4 to SC-N12
SZ-AS3N	SZ2AS3N		1NO+1NC						SC-N14, SC-N16

Contactors FC series

AC operated Type	Ordering code	DC operated Type	Ordering code	Max. motor capacity (kW) *3 3-phase 200V 240V	380V 440V	Operational current (A) *3 3-phase 200V 240V	380V 440V	Continuous current (A)	Contact arrangement Main contact	Aux. contact
FC-0UL	SF12B1A-■10	**FC-0/GUL**	SF12B1G-■10	3.0	2.5	12	6	20	3NO	1NO *1
FC-0TUL	SF12B3A-■10	**FC-0T/GUL**	SF12B3G-■10	2.2	2.5	12	6	20	3NO	1NO *1
FC-0SUL	SF15B1A-■10	**FC-0S/GUL**	SF15B1G-■10	3.5	4.5	15	10	20	3NO	1NO *1
FC-0STUL	SF15B3A-■10	**FC-0ST/GUL**	SF15B3G-■10	3.5	4.5	15	10	20	3NO	1NO *1
FC-1UL	SF20B1A-■11	–	–	5.5	5.5	20	13	30	3NO	1NO+1NC
FC-1SUL	SF26B1A-■11	–	–	7.5	7.5	27	18	30	3NO	1NO+1NC
FC-2SUL	SF35B1A-■11	–	–	11	11	40	26	45	3NO	1NO+1NC *2
FC-3UL	SF50B1A-■11	–	–	15	18.5	52	40	60	3NO	1NO+1NC *2
FC-4UL	SF65B1A-■11	–	–	18.5	30	65	65	80	3NO	1NO+1NC *2

Notes: *1 Auxiliary contact 1NC is available on request.
*2 Auxiliary contact 2NO or 2NC is available on request.
*3 Conforming to IEC 60497-4-1 AC-3
■ Coil voltage code

Solid-state contactors SS series
Single pole type

● Main circuit 240V AC, SS101 to SS2001

Type	**SS101-5Z-A3** **SS101-5Z-A4** **SS101-3Z-D3**	**SS201-5Z-A3** **SS201-5Z-A4** **SS201-3Z-D3**	**SS301-5Z-A3** **SS301-5Z-A4** **SS301-3Z-D3**	**SS401-5Z-A3** **SS401-5Z-A4** **SS401-3Z-D3**	**SS501-5Z-A3** **SS501-5Z-A4** **SS501-3Z-D3**
Ordering code	SS101-5ZA3 SS101-5ZA4 SS101-3ZD3	SS201-5ZA3 SS201-5ZA4 SS201-3ZD3	SS301-5ZA3 SS301-5ZA4 SS301-3ZD3	SS401-5ZA3 SS401-5ZA4 SS401-3ZD3	SS501-5ZA3 SS501-5ZA4 SS501-3ZD3
Rated thermal current(A) *	10	20	30	40	50
Control voltage	A3 : 100V-120V AC, A4 : 200-240V AC, D3 : 5-24V DC				

Type	**SS701-1Z-A3** **SS701-1Z-A4** **SS701-3Z-D3**	**SS1001-1Z-A3** **SS1001-1Z-A4** **SS1001-3Z-D3**	**SS1501-1Z-A3** **SS1501-1Z-A4** **SS1501-3Z-D3**	**SS2001-1Z-A3** **SS2001-1Z-A4** **SS2001-3Z-D3**	
Ordering code	SS701-1ZA3 SS701-1ZA4 SS701-3ZD3	SS1A1-1ZA3 SS1A1-1ZA4 SS1A1-3ZD3	SS1F1-1ZA3 SS1F1-1ZA4 SS1F1-3ZD3	SS1A1-1ZA3 SS1A1-1ZA4 SS1A1-3ZD3	
Rated thermal current(A) *	70	100	150	200	
Control voltage	A3 : 100V-120V AC, A4 : 200-240V AC, D3 : 5-24V DC				

● Main circuit 480V AC, SS701H to SS2001H

Type	**SS701H-1Z-A3** **SS701H-1Z-A4** **SS701H-3Z-D3**	**SS1001H-1Z-A3** **SS1001H-1Z-A4** **SS1001H-3Z-D3**	**SS1501H-1Z-A3** **SS1501H-1Z-A4** **SS1501H-3Z-D3**	**SS2001H-1Z-A3** **SS2001H-1Z-A4** **SS2001H-3Z-D3**	
Ordering code	SS701H-1ZA3 SS701H-1ZA4 SS701H-3ZD3	SS1A1H-1ZA3 SS1A1H-1ZA4 SS1A1H-3ZD3	SS1F1H-1ZA3 SS1F1H-1ZA4 SS1F1H-3ZD3	SS1A1H-1ZA3 SS1A1H-1ZA4 SS1A1H-3ZD3	
Rated thermal current(A) *	70	100	150	200	
Control voltage	A3 : 100V-120V AC, A4 : 200-240V AC, D3 : 5-24V DC				

Note: * The values are maximum ratings that apply at an ambient temperature not exceeding 40°C.

Magnetic Contactors and Starters
TÜV approved

3-pole type

● Main circuit 240V AC

Contactor 3-pole, 2-element Basic type	Basic ordering code	3-pole, 3-element Basic type	Basic ordering code	Cooling fin to be combined 3-pole, 2-element Basic type	Basic ordering code	3-pole, 3-element Basic type	Basic ordering code	Continuous current (A)	Motor ratings 3-phase 220V AC 60Hz Capacity (HP)	Full load current (A)
SS032	SS032	**SS033**	SS033	–	–	–	–	3	0.5	1.8
SS082	SS082	**SS083**	SS083	*	*	*	*	8	0.75	3.2
SS202	SS202	**SS203**	SS203	**SX1-D10**	SY1D0	**SX1-D10**	SY1D0	20	1.5	8
SS302	SS302	**SS303**	SS303	**SX1-D10**	SY1D0	**SX1-E12**	SY1E2	30	2	11
SS402	SS402	**SS403**	SS403	**SX1-D14**	SY1D4	**SX1-E12**	SY1E2	40	3	17.4
SS502	SS502	**SS503**	SS503	**SX1-E12**	SY1E2	**SX1-E17**	SY1E7	50	5	26
SS802	SS802	**SS803**	SS803	**SX1-C12**	SY1C2	**SX1-C12**	SY1C2	80	10	34
SS1202	SS1C2	**SS1203**	SS1C3	**SX1-C12**	SY1C2	**SX1-C12**	SY1C2	120	10	34

Note: * Cooling fin provided

● Main circuit 480V AC

Contactor 3-pole, 2-element Basic type	Basic ordering code	3-pole, 3-element Basic type	Basic ordering code	Cooling fin to be combined 3-pole, 2-element Basic type	Basic ordering code	3-pole, 3-element Basic type	Basic ordering code	Continuous current (A)	Motor ratings 3-phase 440V AC 60Hz Capacity (HP)	Full load current (A)
SS302H	SS302H	**SS303H**	SS303H	**SX1-E12**	SY1E2	**SX1-E12**	SY1E2	30	–	–
SS502H	SS502H	**SS503H**	SS503H	**SX1-E12**	SY1E2	**SX1-E17**	SY1E7	50	10	24
SS802H	SS802H	**SS803H**	SS803H	**SX1-C12**	SY1C2	**SX1-C12**	SY1C2	80	20	48
SS1202H	SS1C2H	**SS1203H**	SS1C3H	**SX1-C12**	SY1C2	**SX1-C12**	SY1C2	120	20	48

● Input voltage

100–120/200–240V AC	5–12V DC
100–120V AC	12–24V DC
200–240V AC	5V DC
12/24V DC	100–110/200–220V AC/DC
5–24V DC	12/24V AC/DC

Note: For details, *see page A1-121.*

China Compulsory Certification (CCC)

■ Description

FUJI contactors and thermal overload relays are approved by CCC.
Ratings, dimensions and wiring diagrams are same as standard type.

■ Ordering information

When ordering CCC products, add the suffix (CCC) to the type number.
Example of magnetic contactor:
SC-5-1 220V AC 50Hz 1NO+1NC (CCC)

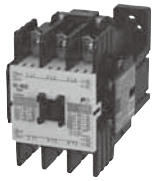

KKD17-096

SC-N3

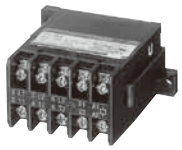

FC-0UL

Magnetic contactors (AC operated, DC operated, With SUPER MAGNET)

AC operated		DC operated		With SUPER MAGNET		Certification number
Non reversing Type	Reversing Type	Non reversing Type	Reversing Type	Non reversing Type	Reversing Type	
SC-03 SC-0 SC-05	SC-03RM SC-0RM SC-05RM	SC-03/G SC-0/G SC-05/G	SC-03RM/G SC-0RM/G SC-05RM/G	–	–	2003010304063432
SC-4-0 SC-4-1 SC-5-1	SC-4-0RM SC-4-1RM SC-5-1RM	SC-4-0/G SC-4-1/G SC-5-1/G	SC-4-0RM/G SC-4-1RM/G SC-5-1RM/G	–	–	2003010304063438
SC-N1 SC-N2	SC-N1RM SC-N2RM	SC-N1/G SC-N2/G	SC-N1RM/G SC-N2RM/G	SC-N1/SE SC-N2/SE	SC-N1RM/SE SC-N2RM/SE	2010010304409824
SC-N2S SC-N3	SC-N2SRM SC-N3RM	SC-N2S/G SC-N3/G	SC-N2SRM/G SC-N3RM/G	SC-N2S/SE SC-N3/SE	SC-N2SRM/SE SC-N3RM/SE	2010010304409825
SC-N4 SC-N5A	SC-N4RM SC-N5ARM	SC-N4/G SC-N5/G	SC-N4RM/G SC-N5RM/G	SC-N4/SE SC-N5	SC-N4RM/SE SC-N5RM	2010010304409826
SC-N6	SC-N6RM	–	–	–	–	2010010304409827
SC-N7	SC-N7RM	–	–	–	–	
SC-N8 SC-N10	SC-N8RM SC-N10RM	–	–	–	–	2013010304603503
SC-N11 SC-N12	SC-N11RM SC-N12RM	–	–	–	–	2013010304603504
SC-N14 SC-N16	SC-N14RM –	– –	– –	– –	–	2013010304603502

Magnetic Contactors and Starters CCC approved

Magnetic contactors (With extra pick-up operating coil, with high capacity auxiliary contact)

With extra pick-up operating coil		With high capacity auxiliary contact (single button contact)		Certification number
Non reversing Type	Reversing Type	Non reversing Type	Reversing Type	
SC-03/U SC-0/U SC-05/U	SC-03RM/U SC-0RM/U SC-05RM/U	SC-03H SC-0H SC-05H	SC-03HRM SC-0HRM SC-05HRM	2003010304063432
SC-4-0/U SC-4-1/U SC-5-1/U	SC-4-0RM/U SC-4-1RM/U SC-5-1RM/U	SC-4-0H SC-4-1H SC-5-1H	SC-4-0HRM SC-4-1HRM SC-5-1HRM	2003010304063438
SC-N1/U SC-N2/U	SC-N1RM/U SC-N2RM/U	SC-N1H SC-N2H	SC-N1HRM SC-N2HRM	2010010304409824
SC-N2S/U SC-N3/U	SC-N2SRM/U SC-N3RM/U	SC-N2SH SC-N3H	SC-N2SHRM SC-N3HRM	2010010304409825
SC-N4/U –	SC-N4RM/U –	SC-N4H SC-N5H, SC-N5AH	SC-N4HRM SC-N5HRM, SC-N5AHRM	2010010304409826
–	–	SC-N6H	SC-N6HRM	2010010304409827
–	–	SC-N7H	SC-N7HRM	
–	–	SC-N8H SC-N10H	SC-N8HRM SC-N10HRM	2013010304603503
–	–	SC-N11H SC-N12H	SC-N11HRM SC-N12HRM	2013010304603504

FC series magnetic contactors

AC operated		DC operated		Certification number
Standard Type	UL, CSA approved Type	Standard Type	UL, CSA approved Type	
FC-0 FC-0T FC-0S FC-0ST	FC-0UL FC-0TUL FC-0SUL FC-0STUL	FC-0/G FC-0T/G FC-0S/G FC-0ST/G	FC-0/GUL FC-0T/GUL – –	2015010304803365
FC-1 FC-1S	FC-1UL FC-1SUL	– –	– –	2015010304797428
FC-2S FC-3	FC-2SUL FC-3UL	– –	– –	2015010304797427
FC-4	FC-4UL	–	–	2015010304797484

Optional units (Auxiliary contact block)

Description		Type	Applicable	Certification number
Front mounting	Bifurcated contact	SZ-A40 SZ-A31 SZ-A22 SZ-A20 SZ-A11 SZ-A02	SC-03 to SC-N3 SH-4, 5	2014010305671215
	Single button contact	SZ-A40H SZ-A31H SZ-A22H	SC-03 to SC-N3 SH-4, 5	
Side mounting	Bifurcated contact	SZ-AS1	SC-03 to SC-N3 SH-4, 5	2014010305687129
		SZ-AS2	SC-N4 to SC-N12	2012010305539518
		SZ-AS3N	SC-N14 to SC-N16	2016010305873472
	Single button contact	SZ-AS1H	SC-03 to SC-N3 SH-4, 5	2014010305687129
		SZ-AS2H	SC-N4 to SC-N12	2012010305539518
		SZ-AS3NH	SC-N14, SC-N16	2016010305873472

Thermal overload relays

Standard type		With phase-loss protection device		Auto reset type		Certification number
On-contactor mounting type	Separate mounting type	On-contactor mounting type	Separate mounting type	On-contactor mounting type	Separate mounting type	
TR-0N/3	TR-0NH/3	TK-0N	TK-0NH	TR-0N/3A	TR-0NH/3A	2003010304063397
TK13	TK13H	TK13	TK13H	TK13A	TK13HA	2014010309674203
TR-5-1N/3	TR-5-1NH/3	TK-5-1N	TK-5-1NH	TR-5-1N/3A	TK-5-1NH/3A	2003010304063400
TK26	TK26H	TK26	TK26H	TK26A	TK26HA	2014010309675793
TR-N2/3	TR-N2H/3	TK-N2	TK-N2H	TR-N2/3A	TR-N2H/3A	2013010309660740
TR-N3/3	TR-N3H/3	TK-N3	TK-N3H	TR-N3/3A	TR-N3H/3A	2013010309660739
TR-N5/3	–	TK-N5		TR-N5/3A	–	
TR-N6/3	TR-N6H/3	TK-N6	TK-N6H	TR-N6/3A	TR-N6H/3A	2013010309660738
TR-N7/3	–	TK-N7	–	TR-N7/3A	–	
TR-N8/3	–	TK-N8	–	TR-N8/3A	–	
TR-N10/3	TR-N10H/3	TK-N10	TK-N10H	TR-N10/3A	TR-N10H/3A	2013010309660737
TR-N12/3	TR-N12H/3	TK-N12	TK-N12H	TR-N12/3A	TR-N12H/3A	2013010309660736
TR-N14/3	TR-N14H/3	TK-N14	TK-N14H	TR-N14/3A	TR-N14H/3A	2013010309660735

Thermal overload relays (Quick operation)

Quick operation		Certification number
On-contactor mounting type	Separate mounting type	
TR-0NQ	TR-0NQH	2003010304063397
TK13Q	TK13QH	2014010309674203
TR-5-1NQ	TR-5-1NQH	2003010304063400
TK26Q	TK26QH	2014010309675793
TR-N2Q	TR-N2QH	2013010309660740
TR-N3Q	TR-N3QH	2013010309660739
TR-N5Q	–	

Note: Quick operation type with phase-loss prodection device is available.

Thermal overload relays (Used with FC series contactor)

Type	Certification number
TR-0NF/3, TK-0NF, TR-0NFQ, TK-0NFQ	2003010304063397
TR-5-1N/3, TK-5-1N, TR-5-1NQ, TK-5-1NQ	2003010304063400
TR-N2F/3, TK-N2F, TR-N2FQ, TK-N2FQ	2013010309660740
TR-N3/3, TK-N3, TR-N3Q, TK-N3Q	2013010309660739

Manual Motor Starters and Contactors Combination Starters

A

A2

Page

DUO Series Manual motor starters

Quick reference guide A2-1
Adjustable thermal-magnetic trip types A2-3
Instantaneous trip types A2-5
UL listed A2-6
Characteristic curves A2-7
Optional accessories A2-8
Dimensions A2-14
Wiring diagrams A2-17
Operating conditions A2-18
Busbar system A2-19

DUO Series Combination Starters

Features A2-23
Protective coordination A2-24
Combinations meeting for UL market A2-26
Optional accessories A2-27
Configuration A2-28
Dimensions A2-30

SK Series Magnetic-Contactors

Standard Models A2-37
Production Models A2-39
Type Number Nomenclature (Magnetic Contactors, Thermal Overload Relays and Auxiliary Relays) A2-40
Ratings A2-42
Protective Coordination A2-48
Normal Operating Conditions and Mounting A2-59
Wiring A2-61
Handling A2-63
Magnetic Contactors A2-65
Reversing Magnetic Contactors A2-69
Thermal Overload Relays A2-76
Optional Unit A2-80
Auxiliary Relays A2-95

SC-E Series Magnetic-Contactors

Quick reference guide A2-97
Optional accessories A2-107
Dimensions A2-109
Operating conditions A2-119
Thermal overload relays TK-E series A2-122

MINIMUM ORDERS

Orders amounting to **less than ¥10,000** net per order will be charged as ¥10,000 net per order plus freight and other charges.

WEIGHTS AND DIMENSIONS

Weights and dimensions appearing in this catalog are the best information available at the time of going to press. FUJI ELECTRIC FA has a policy of continuous product improvement, and design changes may make this information out of date.
Please confirm such details before planning actual construction.

INFORMATION IN THIS CATALOG IS SUBJECT TO CHANGE WITHOUT NOTICE.

■ 32AF types and ratings

		Standard breaking capacity	High breaking capacity
Adjustable thermal-magnetic trip type Instantaneous trip type		BM3RSB-□ KKD17-010	BM3RHB-□ BM3RHBK-□ 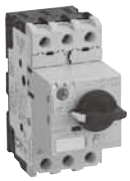 KKD17-008
Number of poles		3	3
Handle type		Rocker	Rotary
Rated current In	(A)	0.16 to 32	
Rated operational voltage Ue	(V)	200 to 690	
Rated frequency	(Hz)	50/60	
Rated insulation voltage Ui	(V)	690	
Rated impulse withstand voltage Uimp	(kV)	6	
Utilization category	IEC 60947-2 Circuit breaker	Cat. A	
	IEC 60947-4-1 Motor starter	AC-3	
Trip class IEC 60947-4-1 *1		10	
Instantaneous trip characteristic		13 × In max.	
Power loss (total of 3-pole)		7W: In=0.16 to 25A 8.5W: In=32A	
Mechanical durability (operations)		100,000: In=0.16 to 25A 70,000: In=32A	
Electrical durability (operations)		100,000: In=0.16 to 25A 70,000: In=32A	
Max. operations per hour (motor start-up)		25	
Phase-loss protection		Provided	
Tripping state indication		Provided	
Test trip function		Provided	

Rated breaking capacity (kA) IEC 60947-2	Adjustable current range		240V 230V		415V 400V		460V 440V		500V		690V 600V		240V 230V		415V 400V		460V 440V		500V		690V 600V	
	Code	Ie: Min.–Max. (A)	Icu	Ics	Icu	Ics	Icu	Ics	Icu	Ics	Icu	Ics	Icu	Ics	Icu	Ics	Icu	Ics	Icu	Ics	Icu	Ics
Replace the □mark in the type number by current range codes.	**P16**	0.1–0.16	100	100	100	100	100	100	100	100	100	100	100	100	100	100	100	100	100	100	100	100
	P25	0.16–0.25	100	100	100	100	100	100	100	100	100	100	100	100	100	100	100	100	100	100	100	100
	P40	0.25–0.4	100	100	100	100	100	100	100	100	100	100	100	100	100	100	100	100	100	100	100	100
	P63	0.4–0.63	100	100	100	100	100	100	100	100	100	100	100	100	100	100	100	100	100	100	100	100
	001	0.63–1	100	100	100	100	100	100	100	100	100	100	100	100	100	100	100	100	100	100	100	100
	1P6	1–1.6	100	100	100	100	100	100	100	100	100	100	100	100	100	100	100	100	100	100	100	100
	2P5	1.6–2.5	100	100	100	100	100	100	100	100	3	2	100	100	100	100	100	100	100	100	8	6
	004	2.5–4	100	100	100	100	100	100	100	100	3	2	100	100	100	100	100	100	100	100	8	6
	6P3	4–6.3	100	100	100	100	50	38	50	38	3	2	100	100	100	100	100	100	100	100	6	5
	010	6.3–10	100	100	100	100	15	11	10	8	3	2	100	100	100	100	50	38	50	38	6	5
	013	9–13	100	100	50	38	10	8	6	5	3	2	100	100	100	100	50	38	42	32	6	5
	016	11–16	100	100	25	19	10	8	6	5	3	2	100	100	50	38	35*2	27	10	8	4	3
	020	14–20	50	38	25	19	10	8	6	5	3	2	100	100	50	38	35*2	27	10	8	4	3
	025	19–25	50	38	25	19	10	8	6	5	3	2	100	100	50	38	35*2	27	10	8	4	3
	032	24–32	50	38	25	19	10	8	6	5	3	2	100	100	50	38	35*2	27	10	8	4	3
	040	28–40	–		–		–		–		–		–		–		–		–		–	
	050	35–50	–		–		–		–		–		–		–		–		–		–	
	063	45–63	–		–		–		–		–		–		–		–		–		–	

Dimensions (mm)	W×H×D	45×90×66	45×90×79
Mass (g)		350	370
Optional accessory	Auxiliary contact block	○	○
	Alarm contact block	○	○
	Auxiliary and alarm contact block	○	○
	Short-circuit alarm contact block	○	○
	Shunt trip device	○	○
	Undervoltage trip device	○	○
	External operating handle	–	○
Standards		c UL us LISTED, TÜV Rheinland, CE, CCC, KC	

Note: *1 Adjustable thermal-magnetic trip type only
*2 When the breaking duty is once "0" in JEM 1195, the breaking capacity is 50kA.

○ Available – Not available

DUO series Manual Motor Starters
BM3 Series Quick reference guide

■ 63AF types and ratings

		Standard breaking capacity	High breaking capacity
Adjustable thermal-magnetic trip type Instantaneous trip type		**BM3VSB-□** KKD17-020	**BM3VHB-□** **BM3VHBK-□** KKD17-018
Number of poles		3	3
Handle type		Rotary	Rotary
Rated current In	(A)	10 to 63	
Rated operational voltage Ue	(V)	200 to 690	
Rated frequency	(Hz)	50/60	
Rated insulation voltage Ui	(V)	1000	
Rated impulse withstand voltage Uimp	(kV)	8	
Utilization category	IEC 60947-2 Circuit breaker	Cat. A	
	IEC 60947-4-1 Motor starter	AC-3	
Trip class IEC 60947-4-1 *1		10	
Instantaneous trip characteristic		13 × In max.	
Power loss (total of 3-pole)		11W: In=10 to 32A 15W: In=40 to 50A 17W: In=63A	
Mechanical durability (operations)		50,000	
Electrical durability (operations)		25,000	
Max. operations per hour (motor start-up)		25	
Phase-loss protection		Provided	
Tripping state indication		Provided	
Test trip function		Provided	

Rated breaking capacity (kA) IEC 60947-2	Adjustable current range Code	Ie: Min.–Max. (A)	240V 230V Icu	240V 230V Ics	415V 400V Icu	415V 400V Ics	460V 440V Icu	460V 440V Ics	500V Icu	500V Ics	690V 600V Icu	690V 600V Ics	240V 230V Icu	240V 230V Ics	415V 400V Icu	415V 400V Ics	460V 440V Icu	460V 440V Ics	500V Icu	500V Ics	690V 600V Icu	690V 600V Ics
Replace the □mark in the type number by current range codes.	**P16**	0.1–0.16	–		–		–		–		–		–		–		–		–		–	
	P25	0.16–0.25	–		–		–		–		–		–		–		–		–		–	
	P40	0.25–0.4	–		–		–		–		–		–		–		–		–		–	
	P63	0.4–0.63	–		–		–		–		–		–		–		–		–		–	
	001	0.63–1	–		–		–		–		–		–		–		–		–		–	
	1P6	1–1.6	–		–		–		–		–		–		–		–		–		–	
	2P5	1.6–2.5	–		–		–		–		–		–		–		–		–		–	
	004	2.5–4	–		–		–		–		–		–		–		–		–		–	
	6P3	4–6.3	–		–		–		–		–		–		–		–		–		–	
	010	6.3–10	100	100	100	100	15	12	10	8	4	3	100	100	100	100	50	38	50	38	6	5
	013	9–13	100	100	50	38	10	8	6	5	4	3	100	100	100	100	50	38	42	32	6	5
	016	11–16	100	100	25	19	10	8	6	5	4	3	100	100	50	38	50	38	12	9	5	4
	020	14–20	50	38	25	19	10	8	6	5	4	3	100	100	50	38	50	38	12	9	5	4
	025	19–25	50	38	25	19	10	8	6	5	4	3	100	100	50	38	35*2	27	12	9	5	4
	032	24–32	50	38	25	19	10	8	6	5	4	3	100	100	50	38	35*2	27	10	8	5	4
	040	28–40	50	38	25	19	10	8	6	5	4	3	100	100	50	38	35*2	27	10	8	5	4
	050	35–50	50	38	25	19	10	8	6	5	4	3	100	100	50	38	35*2	27	10	8	5	4
	063	45–63	50	38	25	19	10	8	6	5	4	3	100	100	50	38	35*2	27	10	8	5	4

Dimensions (mm)	W×H×D	55×110×96
Mass (g)		780
Optional accessory	Auxiliary contact block	○
	Alarm contact block	○
	Auxiliary and alarm contact block	○
	Short-circuit alarm contact block	○
	Shunt trip device	○
	Undervoltage trip device	○
	External operating handle	○
Standards		c UL us LISTED, TÜV Rheinland, CE, CCC, KC

Note: * 1 Adjustable thermal-magnetic trip type only
* 2 When the breaking duty is once “0” in JEM 1195, the breaking capacity is 50kA.

○ Available – Not available

DUO series Manual Motor Starters
BM3 Series Adjustable thermal-magnetic trip types

Adjustable thermal-magnetic trip types

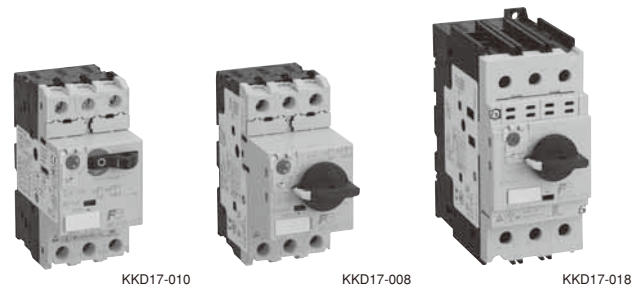

BM3RSB BM3RHB BM3VHB

■ Features

- A wide rated operational current range of up to 32A for the 45mm wide and 63A for the 55mm wide starters.
- ON/OFF and trip indications ensure instant status recognition.
- Suitable for 3-phase motors up to 30kW at 440V AC, AC-3.
- Accessories like auxiliary contact blocks, shunt trip devices, and undervoltage trip devices have been standardized for the 45mm and 55mm wide frame sizes of the BM3R and BM3V.
- Enclosures and external operating handles are available as optional accessories.

■ Standards

IEC 60947-1, 60947-2, 60947-4-1, UL 60947-4-1,
CSA C22.2 No.14, CCC, K60947-1*3, 60947-2*3

■ Types and ratings

• 32AF standard breaking capacity, rocker handle types

Max. motor capacity and full-load current 3-phase *1 (IEC)				Rated current *2 In (A)	Thermal current setting range Ie (A)	Instantaneous trip current (A)	Rated breaking capacity Icu (kA)			Type
200-240V AC (kW)	(A)	380-440V AC (kW)	(A)				240V AC	415V AC	440V AC	
–	–	–	–	0.16	0.1–0.16	2.1	100	100	100	**BM3RSB-P16**
–	–	0.06	0.2	0.25	0.16–0.25	3.3	100	100	100	**BM3RSB-P25**
0.06	0.35	0.09	0.3	0.4	0.25–0.4	5.2	100	100	100	**BM3RSB-P40**
0.09	0.52	0.18	0.6	0.63	0.4–0.63	8.2	100	100	100	**BM3RSB-P63**
0.12	0.7	0.25	0.85	1	0.63–1	13	100	100	100	**BM3RSB-001**
0.25	1.5	0.55	1.5	1.6	1–1.6	20.8	100	100	100	**BM3RSB-1P6**
0.37	1.9	0.75	1.9	2.5	1.6–2.5	32.5	100	100	100	**BM3RSB-2P5**
0.75	3.3	1.5	3.6	4	2.5–4	52	100	100	100	**BM3RSB-004**
1.5	6.3	2.2	4.9	6.3	4–6.3	81.9	100	100	50	**BM3RSB-6P3**
2.2	8.5	4	8.5	10	6.3–10	130	100	100	15	**BM3RSB-010**
3	11.3	5.5	11.5	13	9–13	169	100	50	10	**BM3RSB-013**
4	15	7.5	15.5	16	11–16	208	100	25	10	**BM3RSB-016**
4	15	7.5	15.5	20	14–20	260	50	25	10	**BM3RSB-020**
5.5	20	11	22	25	19–25	325	50	25	10	**BM3RSB-025**
7.5	27	15	29	32	24–32	416	50	25	10	**BM3RSB-032**

• 32AF high breaking capacity, rotary handle types

Max. motor capacity and full-load current 3-phase *1 (IEC)				Rated current *2 In (A)	Thermal current setting range Ie (A)	Instantaneous trip current (A)	Rated breaking capacity Icu (kA)			Type
200-240V AC (kW)	(A)	380-440V AC (kW)	(A)				240V AC	415V AC	440V AC	
–	–	–	–	0.16	0.1–0.16	2.1	100	100	100	**BM3RHB-P16**
–	–	0.06	0.2	0.25	0.16–0.25	3.3	100	100	100	**BM3RHB-P25**
0.06	0.35	0.09	0.3	0.4	0.25–0.4	5.2	100	100	100	**BM3RHB-P40**
0.09	0.52	0.18	0.6	0.63	0.4–0.63	8.2	100	100	100	**BM3RHB-P63**
0.12	0.7	0.25	0.85	1	0.63–1	13	100	100	100	**BM3RHB-001**
0.25	1.5	0.55	1.5	1.6	1–1.6	20.8	100	100	100	**BM3RHB-1P6**
0.37	1.9	0.75	1.9	2.5	1.6–2.5	32.5	100	100	100	**BM3RHB-2P5**
0.75	3.3	1.5	3.6	4	2.5–4	52	100	100	100	**BM3RHB-004**
1.5	6.3	2.2	4.9	6.3	4–6.3	81.9	100	100	100	**BM3RHB-6P3**
2.2	8.5	4	8.5	10	6.3–10	130	100	100	50	**BM3RHB-010**
3	11.3	5.5	11.5	13	9–13	169	100	100	50	**BM3RHB-013**
4	15	7.5	15.5	16	11–16	208	100	50	35	**BM3RHB-016**
4	15	7.5	15.5	20	14–20	260	100	50	35	**BM3RHB-020**
5.5	20	11	22	25	19–25	325	100	50	35	**BM3RHB-025**
7.5	27	15	29	32	24–32	416	100	50	35	**BM3RHB-032**

Notes: *1 These values are based on IEC60947-4-1Annex G. Check the actual full-load current of the motor before use.
*2 Max. thermal current setting value

DUO series Manual Motor Starters
BM3 Series Adjustable thermal-magnetic trip types

• 63AF standard breaking capacity, rotary handle types

Max. motor capacity and full-load current 3-phase *1 (IEC)				Rated current *2 In (A)	Thermal current setting range Ie (A)	Instantaneous trip current (A)	Rated breaking capacity Icu (kA)			Type
200-240V AC		380-440V AC								
(kW)	(A)	(kW)	(A)				240V AC	415V AC	440V AC	
2.2	8.5	4	8.5	10	6.3–10	130	100	100	15	**BM3VSB-010**
3	11.3	5.5	11.5	13	9–13	169	100	50	10	**BM3VSB-013**
4	15	7.5	15.5	16	11–16	208	100	25	10	**BM3VSB-016**
4	15	7.5	15.5	20	14–20	260	50	25	10	**BM3VSB-020**
5.5	20	11	22	25	19–25	325	50	25	10	**BM3VSB-025**
7.5	27	15	29	32	24–32	416	50	25	10	**BM3VSB-032**
11	38	18.5	35	40	28–40	520	50	25	10	**BM3VSB-040**
11	38	22	41	50	35–50	650	50	25	10	**BM3VSB-050**
15	51	30	55	63	45–63	819	50	25	10	**BM3VSB-063**

• 63AF high breaking capacity, rotary handle types

Max. motor capacity and full-load current 3-phase *1 (IEC)				Rated current *2 In (A)	Thermal current setting range Ie (A)	Instantaneous trip current (A)	Rated breaking capacity Icu (kA)			Type
200-240V AC		380-440V AC								
(kW)	(A)	(kW)	(A)				240V AC	415V AC	440V AC	
2.2	8.5	4	8.5	10	6.3–10	130	100	100	50	**BM3VHB-010**
3	11.3	5.5	11.5	13	9–13	169	100	100	50	**BM3VHB-013**
4	15	7.5	15.5	16	11–16	208	100	50	50	**BM3VHB-016**
4	15	7.5	15.5	20	14–20	260	100	50	50	**BM3VHB-020**
5.5	20	11	22	25	19–25	325	100	50	35	**BM3VHB-025**
7.5	27	15	29	32	24–32	416	100	50	35	**BM3VHB-032**
11	38	18.5	35	40	28–40	520	100	50	35	**BM3VHB-040**
11	38	22	41	50	35–50	650	100	50	35	**BM3VHB-050**
15	51	30	55	63	45–63	819	100	50	35	**BM3VHB-063**

Notes: *1 These values are based on IEC60947-4-1Annex G. Check the actual full-load current of the motor before use.
*2 Max. thermal current setting value
*3 Excludes BM3VSB-063 and BM3VHB-063.

■ Type number nomenclature

BM3VHB - 063

Basic type

Frame size
R: 32AF 45mm wide
V: 63AF 55mm wide

Rated current

Operating characteristic
B: Adjustable thermal-magnetic trip
BK: Instantaneous trip
R: Adjustable thermal-magnetic trip, ring terminal
RK: Instantaneous trip, ring terminal

Breaking capacity
S: Standard breaking capacity
H: High breaking capacity

■ Ordering information

Specify the following:
1. Type number
2. Accessories if required

DUO series Manual Motor Starters
BM3 Series Instantaneous trip types

Instantaneous trip types

■ Features

- Instantaneous trip type for short-circuit or overcurrent protection of three-phase motors up to 63A (240V AC, 15kW, or 440V AC, 30kW).
- A motor overload protection function is not provided. Protecting the motor circuits is possible by using the starter together with a thermal overload relay that is matched to the thermal characteristics and startup time of the motor.
- Two modules, 45mm or 55mm wide, cover current ratings from 0.1 to 63A.
  RHBK: 45mm wide, rated current of 0.1 to 32A
  VHBK: 55mm wide, rated current of 6.3 to 63A
- Rotary handle
- Versatile accessories
  Internal and external auxiliary contact blocks, alarm contact block
  Short-circuit alarm contact block
  Shunt trip device
  Undervoltage trip device

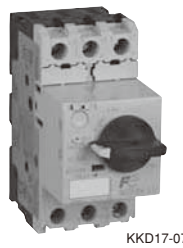
KKD17-078
BM3RHBK

KKD17-079
BM3VHBK

■ Standards

IEC 60947-1, 60947-2, 60947-4-1, UL 60947-4-1
CSA C22.2 No.14, CCC, K60947-1*2, 60947-2*2

■ Types and ratings

• 32AF high breaking capacity, rotary handle type

Max. motor capacity and full-load current 3-phase *1 (IEC)				Rated current In (A)	Instantaneous trip current (A)	Rated breaking capacity Icu (kA)			Type
200-240V AC		380-440V AC							
(kW)	(A)	(kW)	(A)			240V AC	415V AC	440V AC	
–	–	–	–	0.16	2.1	100	100	100	**BM3RHBK-P16**
–	–	0.06	0.2	0.25	3.3	100	100	100	**BM3RHBK-P25**
0.06	0.35	0.09	0.3	0.4	5.2	100	100	100	**BM3RHBK-P40**
0.09	0.52	0.18	0.6	0.63	8.2	100	100	100	**BM3RHBK-P63**
0.12	0.7	0.25	0.85	1	13	100	100	100	**BM3RHBK-001**
0.25	1.5	0.55	1.5	1.6	20.8	100	100	100	**BM3RHBK-1P6**
0.37	1.9	0.75	1.9	2.5	32.5	100	100	100	**BM3RHBK-2P5**
0.75	3.3	1.5	3.6	4	52	100	100	100	**BM3RHBK-004**
1.5	6.3	2.2	4.9	6.3	81.9	100	100	100	**BM3RHBK-6P3**
2.2	8.5	4	8.5	10	130	100	100	50	**BM3RHBK-010**
3	11.3	5.5	11.5	13	169	100	100	50	**BM3RHBK-013**
4	15	7.5	15.5	16	208	100	50	35	**BM3RHBK-016**
4	15	7.5	15.5	20	260	100	50	35	**BM3RHBK-020**
5.5	20	11	22	25	325	100	50	35	**BM3RHBK-025**
7.5	27	15	29	32	416	100	50	35	**BM3RHBK-032**

Notes: *1 These values are based on IEC60947-4-1Annex G. Check the actual full-load current of the motor before use.
• Select appropriate thermal overload relay for starter.

• 63AF high breaking capacity, rotary handle type

Max. motor capacity and full-load current 3-phase *1 (IEC)				Rated current In (A)	Instantaneous trip current (A)	Rated breaking capacity Icu (kA)			Type
200-240V AC		380-440V AC							
(kW)	(A)	(kW)	(A)			240V AC	415V AC	440V AC	
2.2	8.5	4	8.5	10	130	100	100	50	**BM3VHBK-010**
3	11.3	5.5	11.5	13	169	100	100	50	**BM3VHBK-013**
4	15	7.5	15.5	16	208	100	50	50	**BM3VHBK-016**
4	15	7.5	15.5	20	260	100	50	50	**BM3VHBK-020**
5.5	20	11	22	25	325	100	50	35	**BM3VHBK-025**
7.5	27	15	29	32	416	100	50	35	**BM3VHBK-032**
11	38	18.5	35	40	520	100	50	35	**BM3VHBK-040**
11	38	22	41	50	650	100	50	35	**BM3VHBK-050**
15	51	30	55	63	819	100	50	35	**BM3VHBK-063**

Notes: *1 These values are based on IEC60947-4-1Annex G. Check the actual full-load current of the motor before use.
*2 Excludes BM3VHBK-063.
• Select appropriate thermal overload relay for starter.

DUO series Manual Motor Starters
BM3 Series UL listed

■ UL listed

FUJI MMS is certified for Group Installation according to UL 60947-4-1. When it is used with a specific current rated BCP (Branch Circuit Protective Device) such as MCCB and Fuse, two or more motors can be connected to one branch circuit as in NEC 430.53.
The followings are some of the major rules for this application.

1. The Conductor size to the motor shall be the same as the branch circuit.
2. The Conductor size to the motor shall not be less than 1/3 of the branch circuit and the length from the BCP to the MMS must not be more than 7.5m (25 feet).
3. The MMS must be “Suitable for tap conductor Protection” and the Conductor size between the BCP and MMS shall not be less than 1/10 of the BCP and the length from the BCP to the MMS must not be more than 3m (10 feet).
4. The rating of the Fuse or MCCB must be smaller than the following table.

BM3RSB, BM3RSR

Adjustable current range Ie (A)	3-pole motor capacity in horsepower (HP) AC				Group installation Breaking capacity (kA)			Max. Fuse / MCCB Rated current (A)
	200–208V	220–240V	440–480V	550–600V	240V AC	480V AC	600V AC	
0.1–0.16	–	–	–	–	100	50	10	500
0.16–0.25	–	–	–	–	100	50	10	500
0.25–0.4	–	–	–	–	100	50	10	500
0.4–0.63	–	–	–	–	100	50	10	500
0.63–1	–	–	1 / 2	1 / 2	100	50	10	500
1–1.6	1 / 4	1 / 3	3 / 4	3 / 4	100	50	10	500
1.6–2.5	1 / 2	1 / 2	1	1–1 / 2	100	50	10	500
2.5–4	3 / 4	3 / 4	2	3	100	50	10	500
4–6.3	1	1–1 / 2	3	5	100	50	10	500
6.3–10	2	3	5	7–1 / 2	100	22	10	500
9–13	3	3	7–1 / 2	10	100	22	10	500
11–16	3	5	10	10	100	22	10	500
14–20	5	5	10	15	50	22	10	500
19–25	7–1 / 2	7–1 / 2	15	20	50	22	10	500
24–32	10	10	20	30	50	22	10	500

BM3RHB, BM3RHR

Adjustable current range Ie (A)	3-pole motor capacity in horsepower (HP) AC				Group installation Breaking capacity (kA)			Max. Fuse / MCCB Rated current (A)
	200–208V	220–240V	440–480V	550–600V	240V AC	480V AC	600V AC	
0.1–0.16	–	–	–	–	100	50	10	500
0.16–0.25	–	–	–	–	100	50	10	500
0.25–0.4	–	–	–	–	100	50	10	500
0.4–0.63	–	–	–	–	100	50	10	500
0.63–1	–	–	1 / 2	1 / 2	100	50	10	500
1–1.6	1 / 4	1 / 3	3 / 4	3 / 4	100	50	10	500
1.6–2.5	1 / 2	1 / 2	1	1–1 / 2	100	50	10	500
2.5–4	3 / 4	3 / 4	2	3	100	50	10	500
4–6.3	1	1–1 / 2	3	5	100	50	10	500
6.3–10	2	3	5	7–1 / 2	100	50	10	500
9–13	3	3	7–1 / 2	10	100	50	10	500
11–16	3	5	10	10	100	50	10	500
14–20	5	5	10	15	100	50	10	500
19–25	7–1 / 2	7–1 / 2	15	20	100	50	10	500
24–32	10	10	20	30	100	50	10	500

BM3VSB, BM3VHB

Adjustable current range Ie (A)	3-pole motor capacity in horsepower (HP) AC				Group installation Breaking capacity (kA)			Max. Fuse / MCCB Rated current (A)
	200–208V	220–240V	440–480V	550–600V	240V AC	480V AC *	600V AC	
6.3–10	2	3	5	7–1 / 2	100	50 (22)	10	600
9–13	3	3	7–1 / 2	10	100	50 (22)	10	600
11–16	3	5	10	10	100	50 (22)	10	600
14–20	5	5	10	15	100	50 (22)	10	600
19–25	7–1 / 2	7–1 / 2	15	20	100	50 (22)	10	600
24–32	10	10	20	30	100	50 (22)	10	600
28–40	10	10	30	30	100	50 (22)	10	600
35–50	15	15	30	40	100	50 (22)	10	600
45–63	20	20	40	60	100	50 (22)	10	600

* Value in ( ) is for BM3VSB.

■ Characteristics curves

• **BM3RSB, RHB, RSR, RHR**

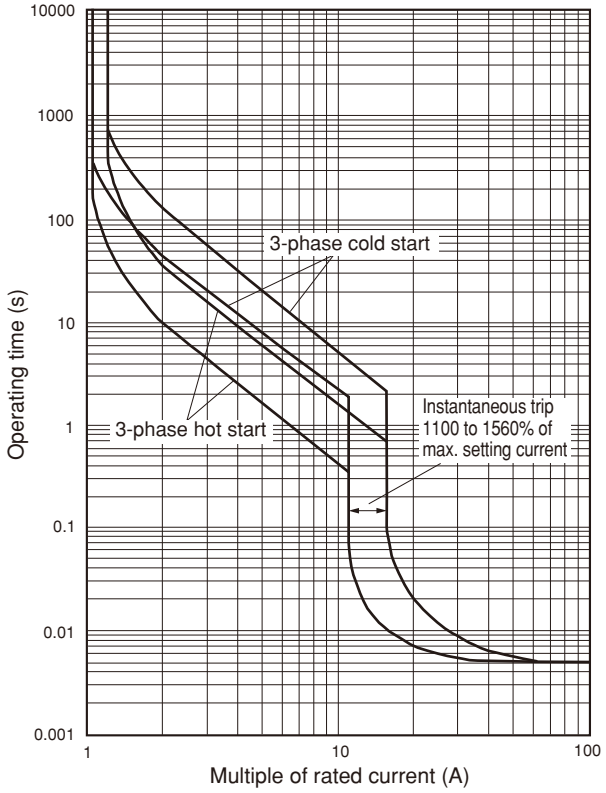

• **BM3VSB, VHB**

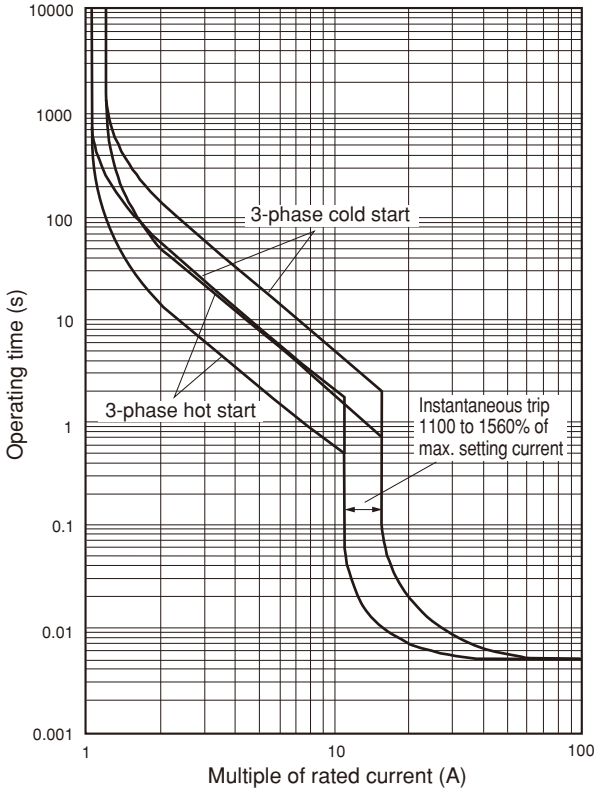

• **BM3RHBK, RHRK**

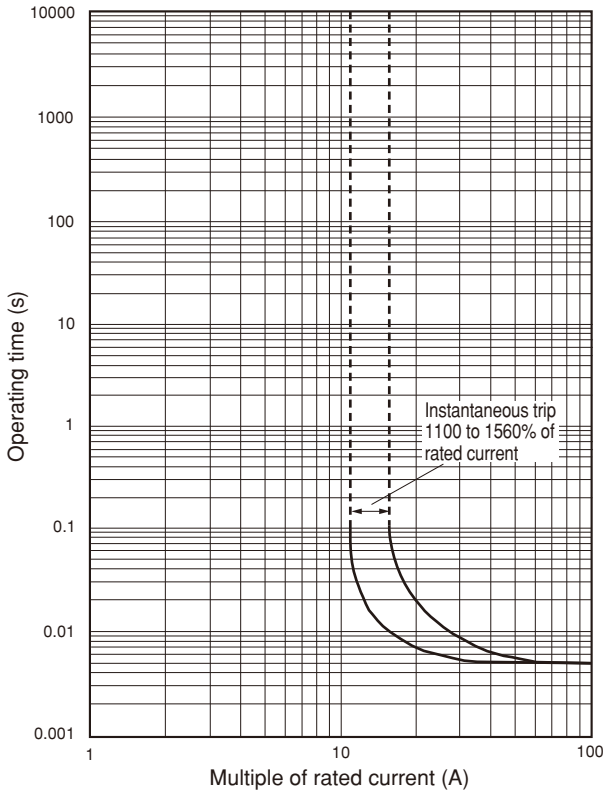

• **BM3VHBK**

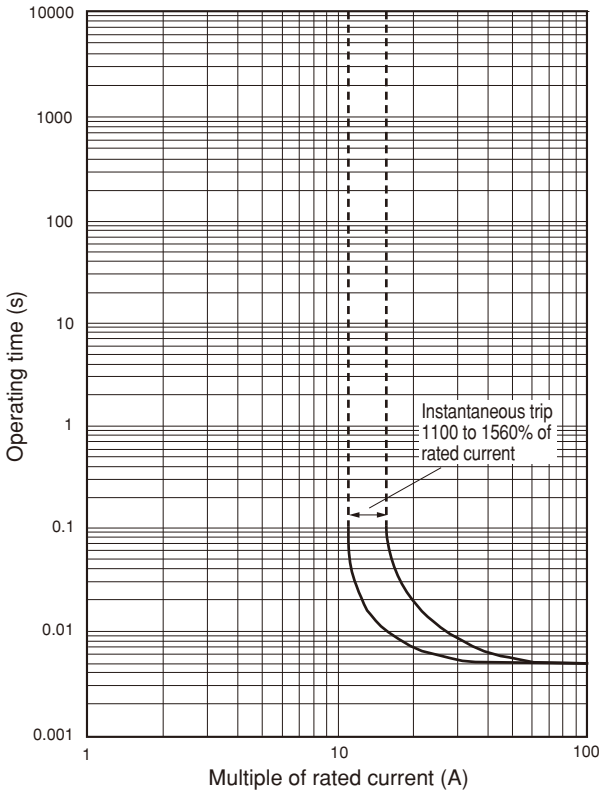

DUO series Manual Motor Starters
BM3 Series Optional accessories

Optional accessories

■ Features

- Auxiliary contact blocks, alarm contact blocks, and shunt/undervoltage trip devices can be used with BM3R (45mm wide) and BM3V (55mm wide) frames.
- Accessories are easily mounted.
- Internally mountable auxiliary contact blocks and alarm contact blocks can be frontally mounted.
- Externally mountable auxiliary contact blocks can be mounted on either the right or left side.
- Shunt trip and undervoltage trip devices are available in a wide operating coil voltage range.
- Standard and emergency external handles are available.
- IP20 terminal cover prevents accidental finger touch to electrically charged parts.

AF01-76, KKD17-001 KKD17-005

■ Types and ratings

• Auxiliary contact blocks/W

Description		Starter type	Mounting	Contact arrangement	Type	Mass (g)
AF01-60L	These blocks are linked to the ON/OFF operation of the MMS. Up to two internally mountable contact blocks can be mounted to the right/left front, and up to two externally mountable contact blocks can be mounted to the right/left sides.	BM3R BM3V	Front	1NO 1NC	**BZ0WIA** **BZ0WIB**	9
			Left side	2NO 1NO+1NC 2NC	**BZ0WUAAL** **BZ0WUABL** **BZ0WUBBL**	45
AF01-59, 01-58			Right side	2NO 1NO+1NC 2NC	**BZ0WUAAR** **BZ0WUABR** **BZ0WUBBR**	45

• Alarm contact blocks/K

Description		Starter type	Mounting	Contact arrangement	Type	Mass (g)
AF01-60R	This block operates when the MMS trips due to overload, phase-loss, or short-circuit. It is not linked to the ON/OFF operation of the MMS. Note: Operation can be checked with the test trip function.	BM3R BM3V	Front (Right side only)	1NO 1NC	**BZ0KIA** **BZ0KIB**	9

Fuji Electric FA Components & Systems Co., Ltd. Information subject to change without notice

• Auxiliary and alarm contact blocks/WK

Description	Starter type	Mounting	Contact arrangement	Type	Mass (g)
AF01-57 • This contact block combines auxiliary contact and alarm contact that operates in the event of an overload, phase-loss, or short-circuit. Alarm contact is not linked to the ON/OFF operation of the MMS. • An alarm is displayed in the contact block's indicator when the alarm contact operates. Note: Operation can be checked with the test trip function.	BM3R BM3V	Left	1NO (Aux.)+ 1NO (Alarm) 1NC (Aux.)+ 1NO (Alarm) 1NO (Aux.)+ 1NC (Alarm) 1NC (Aux.)+ 1NC (Alarm)	**BZ0WKUAA** **BZ0WKUBA** **BZ0WKUAB** **BZ0WKUBB**	45

• Short-circuit alarm contact blocks/KI

Description	Starter type	Mounting	Contact arrangement	Type	Mass (g)
AF01-56 • The contacts operate only when the MMS has tripped due to a short-circuit. • When these contacts operate, the blue reset button extends out, and a trip indication is displayed. • The power to the MMS can be ready to be turned on after pressing the reset button. Note: Operation can not be checked with the test trip function. Be sure to press the reset button before mounting to the MMS.	BM3R BM3V	Left	1NO+1NC	**BZ0TKUAB**	45

• Shunt trip devices/F

Description	Starter type	Mounting	Coil voltage	Type	Mass (g)
AF01-55 This device is used to remotely trip the MMS. Notes: • This device cannot be used together with an undervoltage trip device. • When the MMS has been tripped with the shunt trip device, press the reset button before turning on the power.	BM3R BM3V	Right	24V 50/60Hz 48V 60Hz 48V 50Hz/60V 60Hz 100V 50Hz/100–110V 60Hz 110–127V 50Hz/120V 60Hz 200V 50Hz/200–220V 60Hz 220–230V 50Hz/240–260V 60Hz 240V 50Hz/277V 60Hz 380–400V 50Hz/400–440V 60Hz 415–440V 50Hz/460–480V 60Hz 500V 50Hz/600V 60Hz 24–60V DC * 110-240V DC *	**BZ0FAZU** **BZ0FBZU** **BZ0FCZU** **BZ0F1ZU** **BZ0FDZU** **BZ0FEZU** **BZ0FFZU** **BZ0FGZU** **BZ0FHZU** **BZ0F4ZU** **BZ0FJZU** **BZ0FKZUD** **BZ0FLZUD**	115

Note: * The time rating of coil is 5s.

• Undervoltage trip devices/R

Description	Starter type	Mounting	Coil voltage	Type	Mass (g)
AF01-54 **R types** This device automatically trips the MMS when the control circuit voltage drops below the specified value. Notes: • This device cannot be used together with a shunt trip device. • When the MMS has been tripped with the undervoltage trip device, press the reset button before turning on the power.	BM3R BM3V	Right	24V 50Hz 24V 60Hz 48V 50Hz 48V 60Hz 100V 50Hz/100–110V 60Hz 110–127V 50Hz/120V 60Hz 200V 50Hz/200–220V 60Hz 220–230V 50Hz/240–260V 60Hz 240V 50Hz/277V 60Hz 380–400V 50Hz/400–440V 60Hz 415–440V 50Hz/460–480V 60Hz 500V 50Hz/600V 60Hz	**BZ0RAZ1U** **BZ0RAZ2U** **BZ0RBZ1U** **BZ0RBZU** **BZ0R1ZU** **BZ0RDZU** **BZ0REZU** **BZ0RFZU** **BZ0RGZU** **BZ0RHZU** **BZ0R4ZU** **BZ0RJZU**	115

DUO series Manual Motor Starters
BM3 Series Optional accessories

• Undervoltage trip device with early make contacts/Re

Description	Starter type	Mounting	Coil voltage	Type	Mass (g)
AF01-52 This device automatically trips the MMS when the control circuit voltage drops below the specified value. The control circuit voltage can be turned completely off by turning off the MMS. Notes: • This device cannot be used together with a shunt trip device. • When the MMS has been tripped with the undervoltage trip device, press the reset button before turning on the power.	BM3RS	Right	24V 50Hz 24V 60Hz 48V 50Hz 48V 60Hz 100V 50Hz/100–110V 60Hz 110–127V 50Hz/120V 60Hz 200V 50Hz/200–220V 60Hz 220–230V 50Hz/240–260V 60Hz 240V 50Hz/277V 60Hz 380–400V 50Hz/400–440V 60Hz 415–440V 50Hz/460–480V 60Hz 500V 50Hz/600V 60Hz	**BZ0RAZ1LKU** **BZ0RAZ2LKU** **BZ0RBZ1LKU** **BZ0RBZLKU** **BZ0R1ZLKU** **BZ0RDZLKU** **BZ0REZLKU** **BZ0RFZLKU** **BZ0RGZLKU** **BZ0RHZLKU** **BZ0R4ZLKU** **BZ0RJZLKU**	115
AF01-53	BM3RH BM3V	Right	24V 50Hz 24V 60Hz 48V 50Hz 48V 60Hz 100V 50Hz/100–110V 60Hz 110–127V 50Hz/120V 60Hz 200V 50Hz/200–220V 60Hz 220–230V 50Hz/240–260V 60Hz 240V 50Hz/277V 60Hz 380–400V 50Hz/400–440V 60Hz 415–440V 50Hz/460–480V 60Hz 500V 50Hz/600V 60Hz	**BZ0RAZ1LTU** **BZ0RAZ2LTU** **BZ0RBZ1LTU** **BZ0RBZLTU** **BZ0R1ZLTU** **BZ0RDZLTU** **BZ0REZLTU** **BZ0RFZLTU** **BZ0RGZLTU** **BZ0RHZLTU** **BZ0R4ZLTU** **BZ0RJZLTU**	115

Note: Refer to page A2-17 for details on how this device operates with the MMS, and on its external connection.

• External operating handles

Description	Starter type	Handle type	Type	Mass (g)
KK02-305 • Used to operate an MMS installed inside a panel, from the outside of the panel. • Equipped with an interlock mechanism that prevents someone from mistakenly opening the panel door when the MMS is in the ON state. • The shaft can be cut to match the distance between the MMS and the panel door. • Door interlock function • OFF lock function • Can be locked OFF with up to three padlocks. Note: Padlocks are to be provided by the customer. • Release screw allows the door to be opened with the handle in the ON position. • IP54 protection degree KK02-306	BM3RH	Standard (black) Emergency (red handle on yellow plate)	**BZ0VBBL** **BZ0VYRL**	160 160
	BM3V	Standard (black) Emergency (red handle on yellow plate)	**BZ0VBBM** **BZ0VYRM**	160 160

• Others

Description		Starter type	Type	Mass (g)
Push-in lug	Used for screw mounting.	BM3R	**BZ0SET** (10 pcs)	2.0 par piece
Terminal cover for IP20	Prevents accidental finger touch to charged parts.	BM3V	**BZ0TCV** (6 pcs)	0.6 par piece
Open space cover 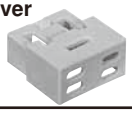 KK02-39	• Used to cover the open space if an internally mountable accessory become unnecessary. • Mounts to either the left-front or right-front position.	BM3R BM3V	**BZ0CFG** (10 pcs)	1.4 par piece

• **Others**

Description		Starter type	Type	Mass (g)
Power supply side terminal cover	• When mounted on the power supply side and combined with the optional BZ0TKUAB short-circuit alarm contact block, the configuration conforms to UL 60947-4-1 type E and F standards.	BM3RSB BM3RHB	**BZ0TCRE**	30 per piece
Long terminal cover 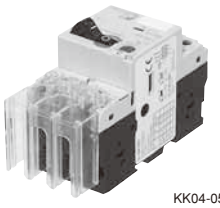 KK04-059	• Prevents exposure between crimp terminals and finger contact • Mountable to both power supply and load sides • Straight wiring connection is also possible in addition to ring terminal connection. • When mounted on the power supply side and combined with the optional BZ0TKUAB short-circuit alarm contact block, the configuration conforms to UL 60947-4-1 type E and F standards. • Minimum quantity: 2 pieces (1 set)	BM3RSR BM3RHR	**BZ0RTCRE**	11 per piece

A2

■ Ratings of accessories

Accessory type		Auxiliary contact block/front **BZ0WI**	Auxiliary contact block/side **BZ0WU**	Alarm contact block **BZ0KI**	Aux. and alarm contact block **BZ0WKU**	Short-circuit alarm contact block **BZ0TKUAB**
Standard		IEC 60947-5-1, UL 60947-4-1				
Rated operational current (A)	48V AC AC-15	5	6	5	6	6
	125V AC	3	4	3	4	4
	230V AC	1.5	4	1.5	4	4
	400V AC	–	2.2	–	2.2	2.2
	500V AC	–	1.5	–	1.5	1.5
	690V AC	–	0.6	–	0.6	0.6
	48V DC DC-13	1.38	5	1.38	5	5
	110V DC	0.55	1.3	0.55	1.3	1.3
	220V DC	0.27	0.5	0.27	0.5	0.5
Contact rating code UL 508		B300 Q300	A600 P300	B300 Q300	A600 P300	A600 P300
Min. voltage and current		17V 5mA				

Accessory type		Shunt trip device **BZ0F**	Undervoltage device **BZ0R**
Standard		IEC 60947-1, UL 60947-4-1	
Rated insulation voltage (V AC)	IEC 60947	690	
	UL 60947-4-1	600	
Operation performance capability (operations)		5000	
Operating time (ms)		20	
Power consumption	Inrush (VA/W)	21/12	
	Shealed (VA/W)	8/1.2	
Voltage range	Tripping voltage (V)	0.7 to 1.1Ue	0.35 to 0.7Ue
	Closing voltage (V)	–	0.85 to 1.1Ue
Time rating of coil (s)		AC: Continuous DC: 5	AC: Continuous DC: –

DUO series Manual Motor Starters
BM3 Series Optional accessories

■ Available accessory configuration

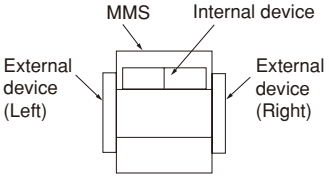

Internal devices

- Auxiliary contact block (W)
- Alarm contact block (K)

External devices

- Auxiliary contact (W2)
- Auxiliary and alarm contact block (WK)
- Short-circuit alarm contact block (KI)
- Shunt trip device (F)
- Undervoltage trip device (R) or undervoltage trip device with early make contacts (Re)

Adj. thermal-magnetic trip type MMS		BM3RSB, BM3RHB, BM3RSR, BM3RHR						BM3VSB, BM3VHB					
Instantaneous trip type MMS		BM3RHBK, BM3RHRK						BM3VHBK					
Internal accessory			W	W	K	W+W	W+K		W	W	K	W+W	W+K
External accessory	W2 (Left)	W2	W2W	W2W	W2K	W2WW	W2WK	W2	W2W	W2W	W2K	W2WW	W2WK
	W2 (Right)	W2	W2W	W2W	W2K	W2WW	W2WK	W2	W2W	W2W	W2K	W2WW	W2WK
	WK (Left)	WK	WKW	WKW	WKK	WKWW	WKWK	WK	WKW	WKW	WKK	WKWW	WKWK
	KI (Left)	KI	KIW	KIW	KIK	KIWW	KIWK	KI	KIW	KIW	KIK	KIWW	KIWK
	F (Right)	F	WF	WF	KF	WWF	WKF	F	WF	WF	KF	WWF	WKF
	R (Re) (Right)	R	WR	WR	KR	WWR	WKR	R	WR	WR	KR	WWR	WKR
	W2 (Left)+F	W2F	W2WF	W2WF	W2KF	W2WWF	W2WKF	W2F	W2WF	W2WF	W2KF	W2WWF	W2WKF
	W2 (Left)+R (Re)	W2R	W2WR	W2WR	W2KR	W2WWR	W2WKR	W2R	W2WR	W2WR	W2KR	W2WWR	W2WKR
	WK+F	WKF	WKWF	WKWF	WKKF	WKWWF	WKWKF	WKF	WKWF	WKWF	WKKF	WKWWF	WKWKF
	WK+R (Re)	WKR	WKWR	WKWR	WKKR	WKWWR	WKWKR	WKR	WKWR	WKWR	WKKR	WKWWR	WKWKR
	KI+F	KIF	KIWF	KIWF	KIKF	KIWWF	KIWKF	KIF	KIWF	KIWF	KIKF	KIWWF	KIWKF
	KI+R (Re)	KIR	KIWR	KIWR	KIKR	KIWWR	KIWKR	KIR	KIWR	KIWR	KIKR	KIWWR	KIWKR
	W2 (Left)+ W2 (Left)	W2W2	W2W2W	W2W2W	W2W2K	W2W2WW	W2W2WK	W2W2	W2W2W	W2W2W	W2W2K	W2W2WW	W2W2WK
	W2 (Left)+ W2 (Right)	W2W2	W2W2W	W2W2W	W2W2K	W2W2WW	W2W2WK	W2W2	W2W2W	W2W2W	W2W2K	W2W2WW	W2W2WK

Note: Do not use an alarm contact block/K together with an undervoltage trip device with early make contacts/Re for the BM3RSB frame. If used together, the alarm contact block will not operate correctly when the MMS is automatically tripped due to undervoltage.

DUO series Manual Motor Starters
BM3 Series Optional accessories

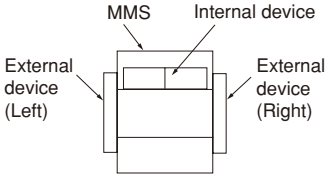

Internal devices

- Auxiliary contact block (W)
- Alarm contact block (K)

External devices

- Auxiliary contact (W2)
- Auxiliary and alarm contact block (WK)
- Short-circuit alarm contact block (KI)
- Shunt trip device (F)
- Undervoltage trip device (R) or undervoltage trip device with early make contacts (Re)

Adj. thermal-magnetic trip type MMS		BM3RSB, BM3RHB, BM3RSR, BM3RSHR						BM3VSB, BM3VHB					
Instantaneous trip type MMS		BM3RHBK, BM3RHRK						BM3VHBK					
Internal accessory			W	W	K	W+W	W+K		W	W	K	W+W	W+K
External accessory	W2 (Right)+ W2 (Right)	W2W2	W2W2W	W2W2W	W2W2K	W2W2WW	W2W2WK	W2W2	W2W2W	W2W2W	W2W2K	W2W2WW	W2W2WK
	W2 (Left)+ WK	W2WK	W2WKW	W2WKW	W2WKK	W2WKWW	W2WKWK	W2WK	W2WKW	W2WKW	W2WKK	W2WKWW	W2WKWK
	W2 (Right)+ WK	W2WK	W2WKW	W2WKW	W2WKK	W2WKWW	W2WKWK	W2WK	W2WKW	W2WKW	W2WKK	W2WKWW	W2WKWK
	W2 (Left)+ KI	W2KI	W2KIW	W2KIW	W2KIK	W2KIWW	W2KIWK	W2KI	W2KIW	W2KIW	W2KIK	W2KIWW	W2KIWK
	W2 (Right)+ KI	W2KI	W2KIW	W2KIW	W2KIK	W2KIWW	W2KIWK	W2KI	W2KIW	W2KIW	W2KIK	W2KIWW	W2KIWK
	KI+WK	KIWK	KIWKW	KIWKW	KIWKK	KIWKWW	KIWKWK	KIWK	KIWKW	KIWKW	KIWKK	KIWKWW	KIWKWK
	W2 (Left)+ W2 (Left)+F	W2W2F	W2W2WF	W2W2WF	W2W2KF	W2W2WWF	W2W2WKF	W2W2F	W2W2WF	W2W2WF	W2W2KF	W2W2WWF	W2W2WKF
	W2 (Left)+ W2 (Left)+R (Re)	W2W2R	W2W2WR	W2W2WR	W2W2KR	W2W2WWR	W2W2WKR	W2W2R	W2W2WR	W2W2WR	W2W2KR	W2W2WWR	W2W2WKR
	W2 (Left)+ WK+F	W2WKF	W2WKWF	W2WKWF	W2WKKF	W2WKWWF	W2WKWKF	W2WKF	W2WKWF	W2WKWF	W2WKKF	W2WKWWF	W2WKWKF
	W2 (Left)+ WK+R (Re)	W2WKR	W2WKWR	W2WKWR	W2WKKR	W2WKWWR	W2WKWKR	W2WKR	W2WKWR	W2WKWR	W2WKKR	W2WKWWR	W2WKWKR
	W2 (Left)+ KI+F	W2KIF	W2KIWF	W2KIWF	W2KIKF	W2KIWWF	W2KIWKF	W2KIF	W2KIWF	W2KIWF	W2KIKF	W2KIWWF	W2KIWKF
	W2 (Left)+ KI+R (Re)	W2KIR	W2KIWR	W2KIWR	W2KIKR	W2KIWWR	W2KIWKR	W2KIR	W2KIWR	W2KIWR	W2KIKR	W2KIWWR	W2KIWKR
	KI+WK+F	KIWKF	KIWKWF	KIWKWF	KIWKKF	KIWKWWF	KIWKWKF	KIWKF	KIWKWF	KIWKWF	KIWKKF	KIWKWWF	KIWKWKF
	KI+WK+R (Re)	KIWKR	KIWKWR	KIWKWR	KIWKKR	KIWKWWR	KIWKWKR	KIWKR	KIWKWR	KIWKWR	KIWKKR	KIWKWWR	KIWKWKR

Note: Do not use an alarm contact block/K together with an undervoltage trip device with early make contacts/Re for the BM3RSB frame. If used together, the alarm contact block will not operate correctly when the MMS is automatically tripped due to undervoltage.

DUO series Manual Motor Starters
BM3 Series Dimensions

■ Dimensions, mm

• Rocker handle types BM3RSB, BM3RSR

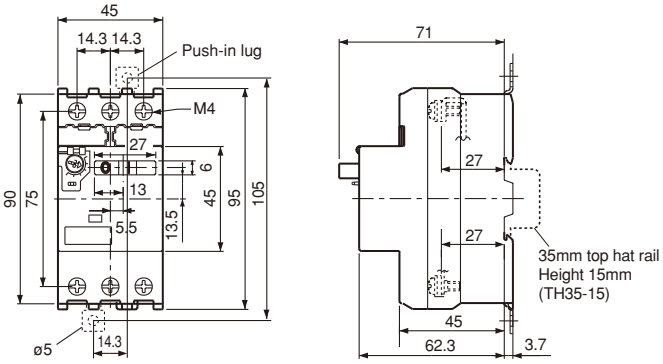

• Rotary handle types BM3RHB, BM3RHR

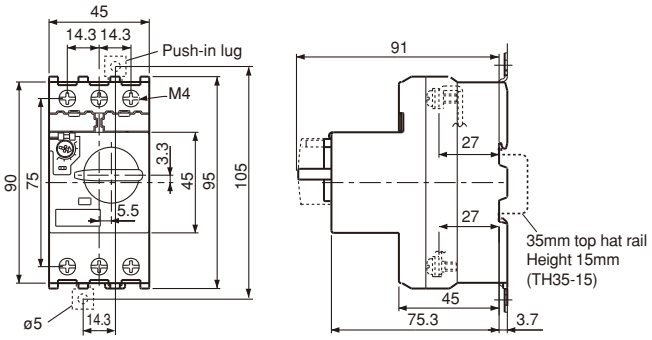

• Rotary handle types BM3VSB, BM3VHB

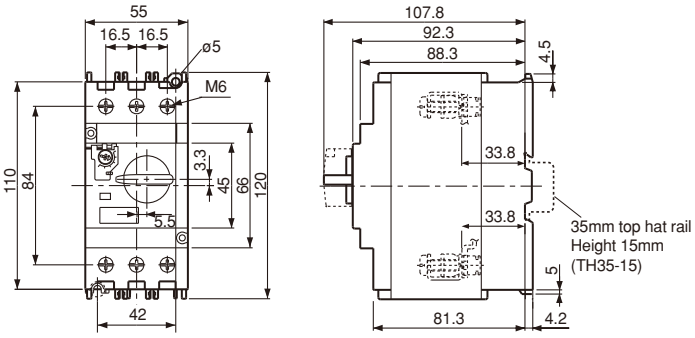

Accessories

• Auxiliary contact blocks, front mounting BZ0WI

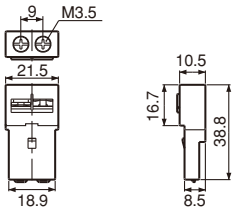

• Auxiliary contact blocks, side mounting BZ0WU

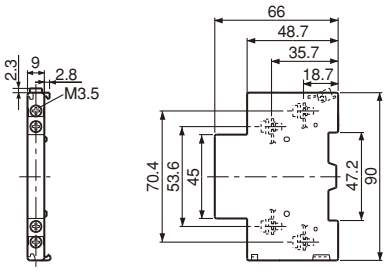

• Alarm contact blocks, front mounting BZ0KI

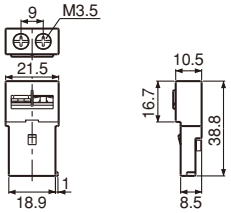

• Auxiliary and alarm contact blocks BZ0WKU

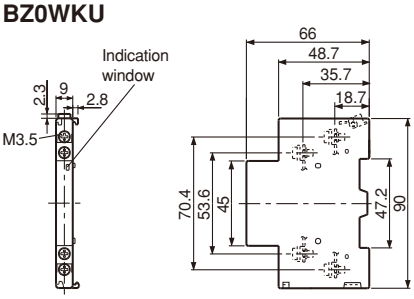

■ Dimensions, mm

Accessories

• Short-circuit alarm contact block BZ0TKUAB

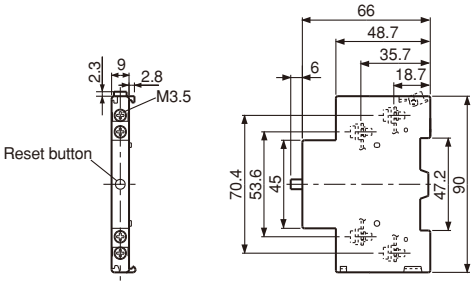

• Shunt trip devices BZ0F
Undervoltage trip devices BZ0R

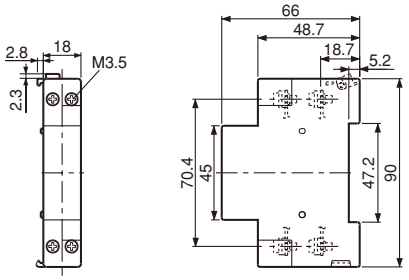

MMS with accessories

• BM3RSB + BZ0
• BM3RSR + BZ0

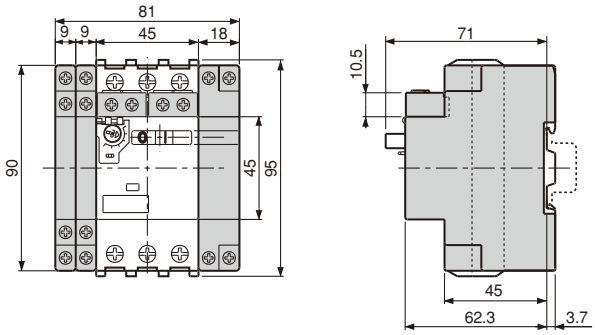

• BM3RSB + BZ0R□LKU (Undervoltage trip device)
• BM3RSR + BZ0R□LKU

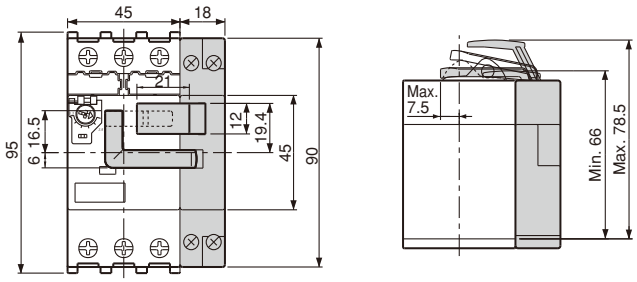

• BM3RHB + BZ0
• BM3RHR + BZ0

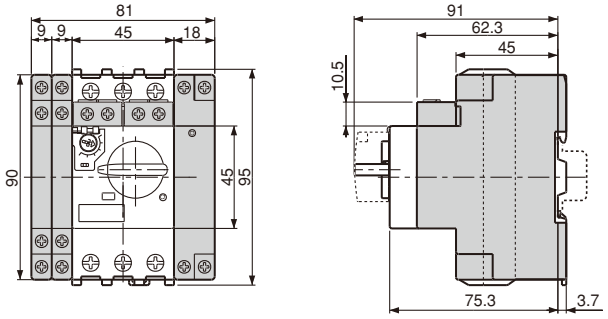

• BM3V□B + BZ0

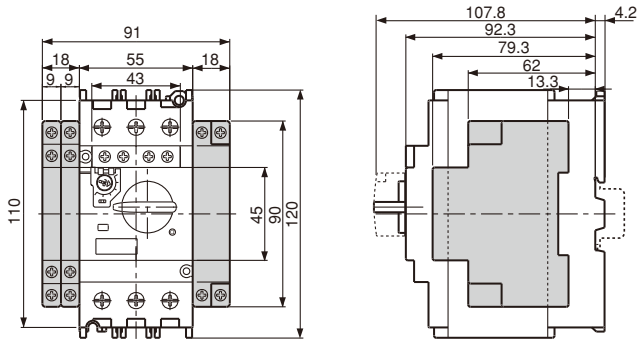

External operation handle BZ0V

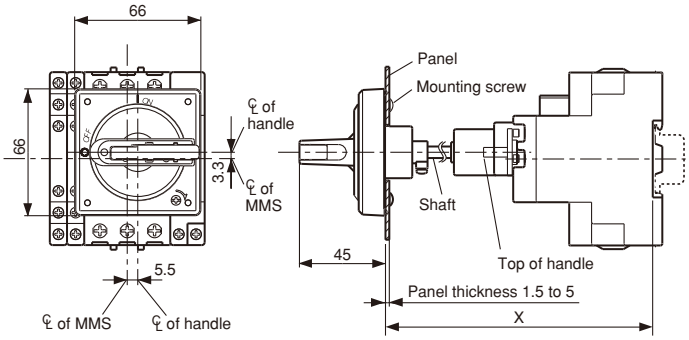

Type	X min.	X max.
BZ0VBBL, BZ0VYRL	1392	2892
BZ0VBBM, BZ0VYRM	1562	3062

Panel drilling

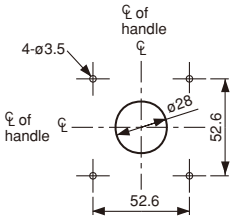

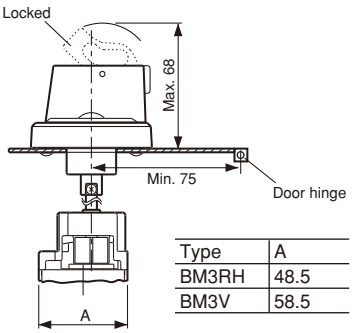

Type	A
BM3RH	48.5
BM3V	58.5

DUO series Manual Motor Starters
BM3 Series Dimensions

■ Dimensions, mm

• UL 60947-4-1 Type E

MMS + Terminal cover + short-circuit alarm contact block

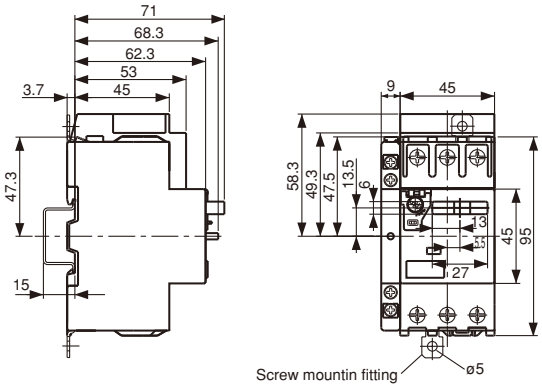

Terminal cover

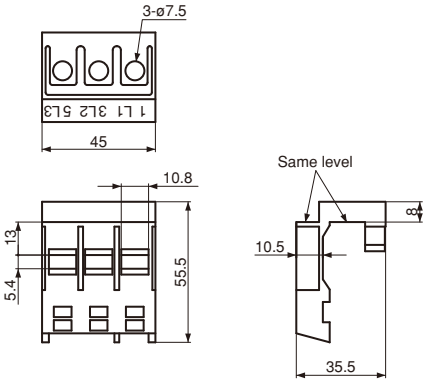

• MMS with long terminal cover

MMS + long terminal cover

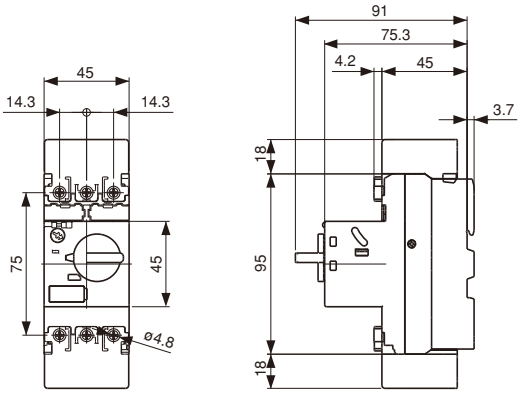

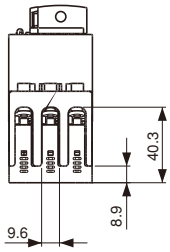

Long terminal cover

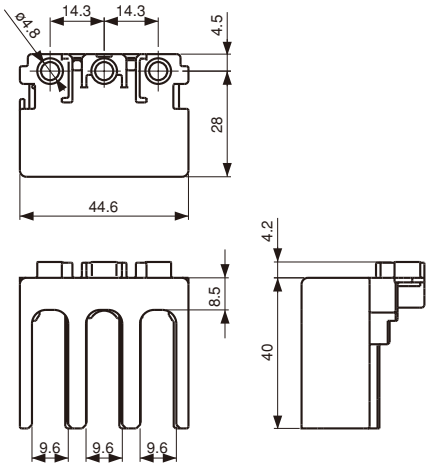

■ Wiring diagrams

• **MMS**

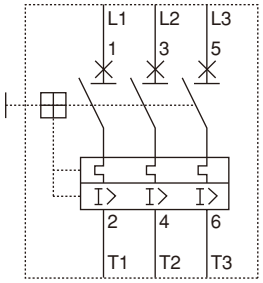

• **Auxiliary contact blocks**

Front mounting

BZ0WIA

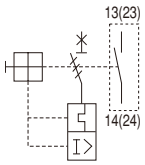

BZ0WIB

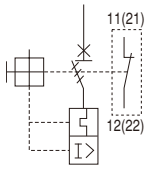

Side mounting

BZ0WUAAL

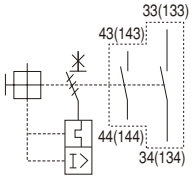

BZ0WUABL

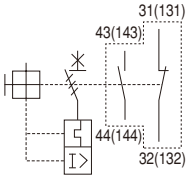

BZ0WUBBL

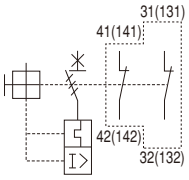

BZ0WUAAR

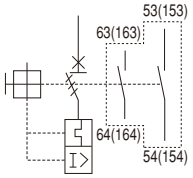

BZ0WUABR

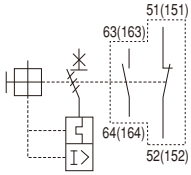

BZ0WUBBR

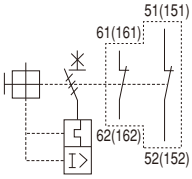

• **Alarm contact blocks**

Front mounting

BZ0KIA

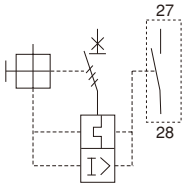

BZ0KIB

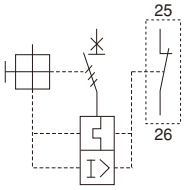

• **Auxiliary and alarm contact blocks**

BZ0WKUAA

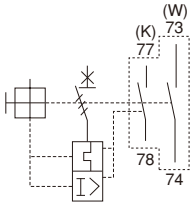

BZ0WKUBA

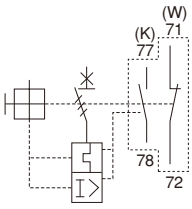

BZ0WKUAB

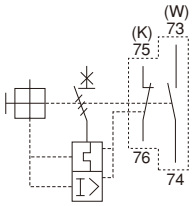

BZ0WKUBB

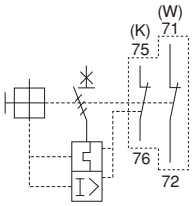

• **Short-circuit alarm contact blocks**

BZ0TKUAB

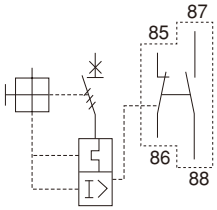

• **Shunt trip devices**

BZ0F

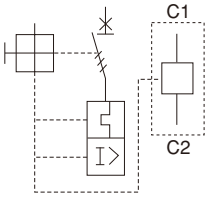

• **Undervoltage trip devices**

BZ0R

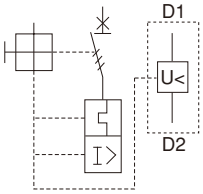

• **Undervoltage trip devices with early make contacts**

BZ0R

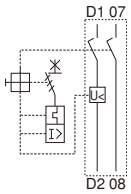

There may be no trip indication and no opening of the auxiliary contact even though the MMS is tripped due to short-circuit, overcurrent, or phase-loss.

External connection

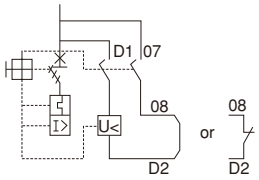

In addition to the functions of the undervoltage trip device, this device completely opens the main circuit and control circuit when the MMS is turned OFF.
However, when the MMS is tripped by a drop in the control circuit voltage, it must be reset.

DUO series Manual Motor Starters
BM3 Series Operating conditions

■ Standard operating conditions

Ambient temperature	Operating: –5 to +55°C Storage: –40 to +65°C	No sudden temperature changes resulting in condensation or icing.
Humidity	45 to 85%RH	
Altitude	2000m or lower	
Atmosphere	No excessive dust, smoke, corrosive gases, flammable gases, steam or salt.	
Vibration	10 to 55Hz 15m/s^2	No abnormal shock or vibration
Shock	50m/s^2	

■ Mountings

• Rail mounting

The MMS can be mounted to a 35mm top hat rail. Secure the rail with screws at mounting pitch of less than 400mm for the BM3R type and less than 300mm for the BM3V type.
Applicable rail:
Use a 15mm-high TH35-15 rail conforming to EN-50022 and IEC715.
The standard rail mounting direction is horizontal. When using the MMS on a vertically mounted rail, use FUJI end clamp kits.

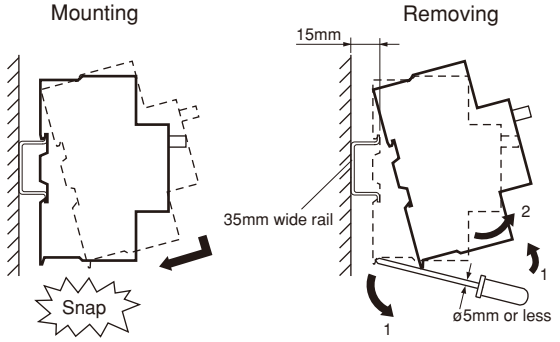

• Screw mounting

The separately sold push-in lug (BZ0SET) is required for screw mounting the BM3R frame. The BM3V frame can be screw mounted directly to the panel.

BM3RSB, RSBK
BM3RHB, RHBK

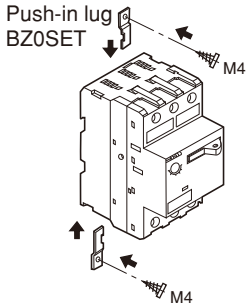

BM3VSB, VSBK
BM3VHB, VHBK

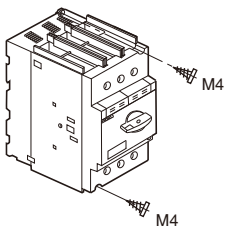

Mounting angle

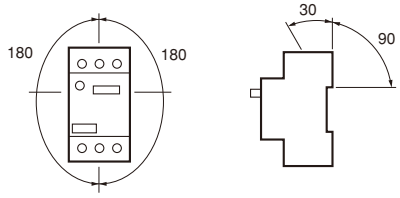

■ Arc space

The arc space required when mounting is shown in the table below.

Type	Rated operational voltage Ue (V)	Min. distance to grounded metal (mm) A, B	C, D
BM3RS	Up to 460	15	20
	UP to 500	15	30
	Up to 690	40	40
BM3RH	Up to 500	15	30
	Up to 690	40	50
BM3V	Up to 500	15	40
	Up to 690	40	50

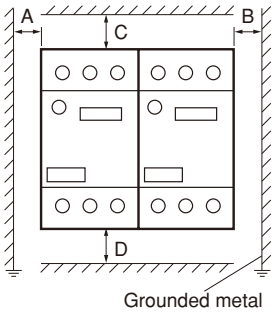

When frames are mounted side-by-side, operating conditions such as a high ambient temperature or using the maximum setting for continuous carrying current may cause slight changes in operating characteristics due to temperature rises.
Under such conditions, it is recommended that the frames be separated by at least 5mm.

■ Wirings

While pressing the wire with a screwdriver, tighten the screw to the specified tightening torque.

Type		BM3R	BM3V	BZ0 Accessories
Solid wire (mm)		ø1.6 to 2.6	ø1.6 to 2.6	ø1 to 1.6
Stranded wire (mm^2)	Single-wire	1 to 10	1 to 25	0.5 to 2.5
	2-wire	1 to 6	1 to 25	0.5 to 2.5
AWG	Single-wire	18 to 8	18 to 4	18 to 14
	2-wire	18 to 10	18 to 4	18 to 14
Sheath stripping length (mm)		Approx.10	Approx.13	Approx.10
Terminal screw		Pan head screw (PZ2) M4	Pan head screw (PZ2) M6	Pan head screw (PZ2) M3.5
Tightening torque (N·m)		2	4	0.8

Note: There is no need for a crimp terminal or any other terminal on the end of the connection wire.

Busbar system

■ Features

- The busbar system reduces wiring time and saves floorspace.
- The busbar makes it easy to power from 2 to 5 manual motor starters – with no wiring needed.
- The 3-phase feed-in terminals are used to connect the wire for the power supply circuit.
- The busbar cover guards against accidental touching of non-connected busbar terminals (charged parts).

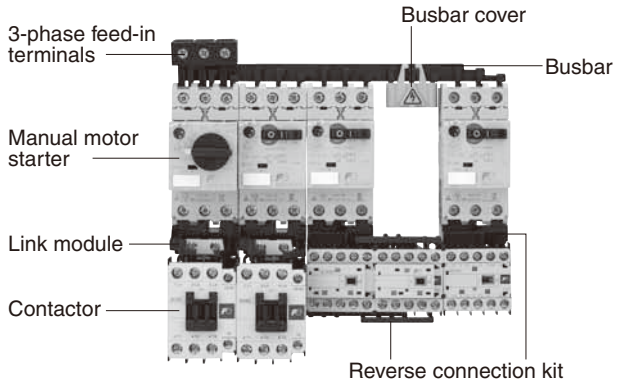

KKD16-023

■ Types and ratings

Description	Used with	Specification		Type	Mass (g)
Busbar	BM3R	Continuous current: 64A max. Pin connection *1 (Black)	2-BM3R, modular space: 45mm	**BZ0BR02A**	30
			3-BM3R, modular space: 45mm	**BZ0BR03A**	50
			4-BM3R, modular space: 45mm	**BZ0BR04A**	70
			5-BM3R, modular space: 45mm	**BZ0BR05A**	90
	BM3R+1-external accessory, 9mm wide		2-BM3R, modular space: 54mm	**BZ0BR12A**	30
			3-BM3R, modular space: 54mm	**BZ0BR13A**	55
			4-BM3R, modular space: 54mm	**BZ0BR14A**	80
			5-BM3R, modular space: 54mm	**BZ0BR15A**	105
	BM3R+2-external accessory, 9mm wide or BM3R+1-external accessory, 18mm wide	Continuous current: 64A max. Fork connection (White)	2-BM3R, modular space: 63mm	**BZ0BR22A***2	45
			4-BM3R, modular space: 63mm	**BZ0BR24A***2	100
	BM3V	Continuous current: 126A max. Pin connection (Black)	2-BM3V, modular space: 55mm	**BZ0BV02A**	140
			3-BM3V, modular space: 55mm	**BZ0BV03A**	240
			4-BM3V, modular space: 55mm	**BZ0BV04A**	340
	BM3V+1-external accessory, 9mm wide		2-BM3V, modular space: 64mm	**BZ0BV12A**	150
			3-BM3V, modular space: 64mm	**BZ0BV13A**	270
			4-BM3V, modular space: 64mm	**BZ0BV14A**	380
	BM3V+2-external accessory, 9mm wide or BM3V+1-external accessory, 18mm wide		2-BM3V, modular space: 73mm	**BZ0BV22A**	165
			4-BM3V, modular space: 73mm	**BZ0BV24A**	425
3-phase feed-in terminal	BM3R	Continuous current: 64A max. Applicable cable size: 25mm^2 max.		**BZ0BFRA**	40
	BM3V	Continuous current: 126A max. Applicable cable size: 50mm^2 max.		**BZ0BFVA**	190
3-phase feed-in terminal (Ring crimp terminal)	BM3R	Continuous current: 64A Applicable cable size: 25mm^2 max.		**BZ0BFRAR**	90
Busbar cover	BZ0BR	For pin connection		**BZ0BCRA**	10
	BZ0BV	For pin connection		**BZ0BCVA**	5

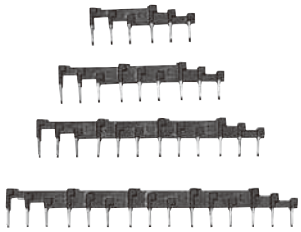
KK02-164

KKD11-139

KKD11-140

AF01-70L

Notes: • When three or more busbar are used, a gap of 6mm will occur between the MMS at the connector point.
*1 Maximum number of MMS that can be mounted side by side using the two busbar (ex. BZ0BR05A × 2)
*2 Fork connection type busbar cannot be combined with power input terminal block. Connection should be made using round type crimp terminal.

DUO series Manual Motor Starters
BM3 Series Busbar system

■ Dimensions, mm

• For BM3R

BZ0BR0 Without external accessory

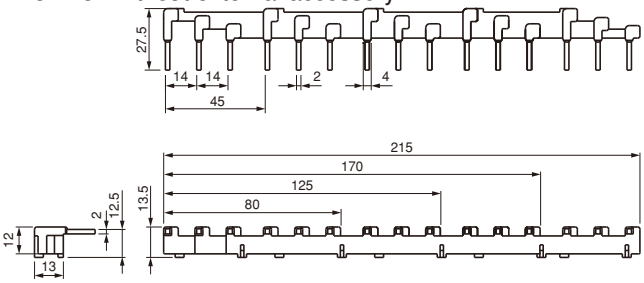

BZ0BR02A: 80mm
BZ0BR03A: 125mm
BZ0BR04A: 170mm
BZ0BR05A: 215mm

BZ0BR1 With 1-external accessory

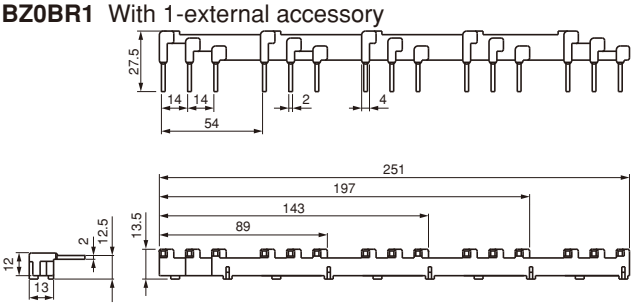

BZ0BR12A: 89mm
BZ0BR13A: 143mm
BZ0BR14A: 197mm
BZ0BR15A: 251mm

BZ0BR2 With 2-external accessory, 9mm wide
With 1-external accessory, 18mm wide

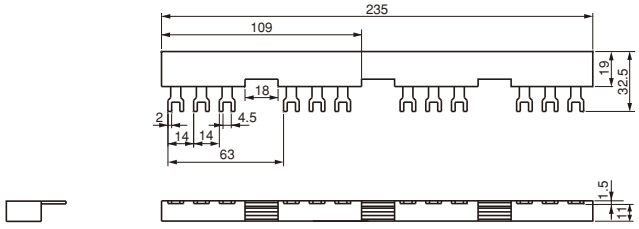

BZ0BR22A: 109mm
BZ0BR24A: 235mm

• For BM3V

BZ0BV0 Without external accessory

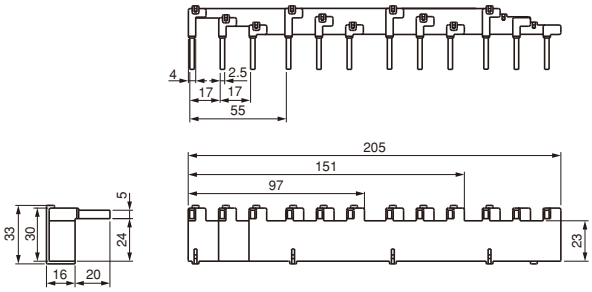

BZ0BV02A: 97mm
BZ0BV03A: 151mm
BZ0BV04A: 205mm

BZ0BV1 With 1-external accessory, 9mm wide

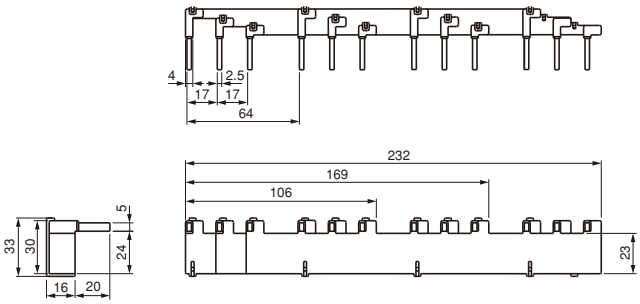

BZ0BV12A: 106mm
BZ0BV13A: 169mm
BZ0BV14A: 232mm

BZ0BV2 With 2-external accessory, 9mm wide
With 1-external accessory, 18mm wide

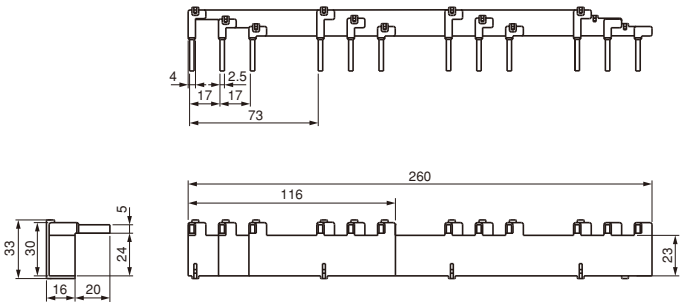

BZ0BV22A: 116mm
BZ0BV24A: 260mm

■ Dimensions, mm

• 3-phase feed-in terminals

BZ0BFRA

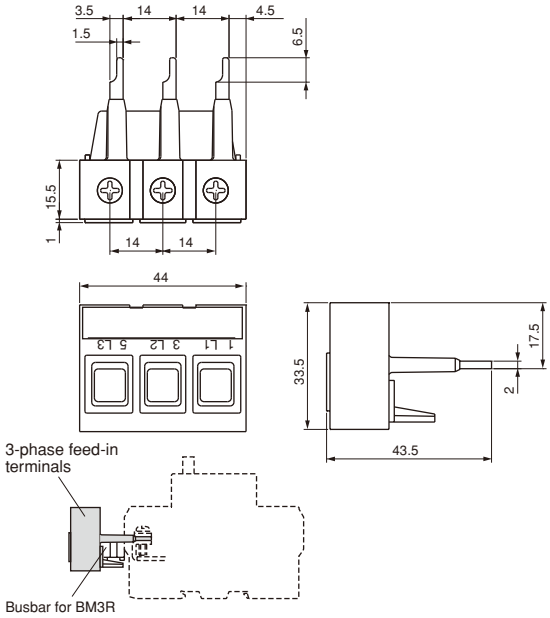

BZ0BFVA

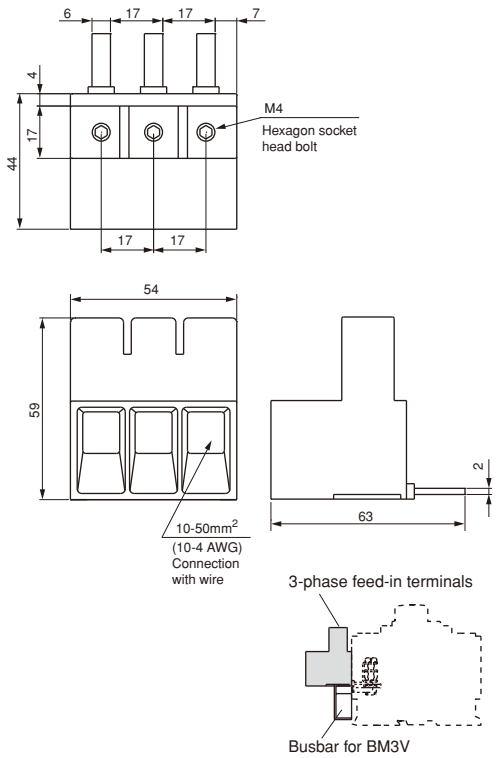

BZ0BFRAR

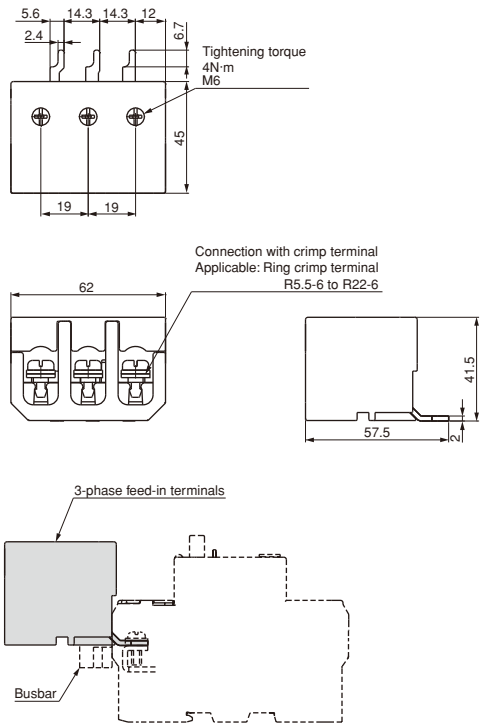

(Note) The fork connection busbar cannot be combined with 3-phase feed-in terminals.

■ Specifications

Type			BZ0BFRA	BZ0BFVA	BZ0BFRAR
Applicable MMS			BM3R□□	BM3V□□	BM3R□□
Standards			IEC/EN60947, UL 60947-4-1, CSA C22.2		IEC/EN60947, UL 60947-4-1 (Conform to Type E, F), CSA C22.2
Maximam voltage IEC/UL (V)			690/600	690/600	690/600
Maximam current IEC/UL (A)			64/63	126/120	64/63
Impulse withstand voltage (kV)			8	8	8
Direct Connection	Stranded wire	(mm²)	6 to 25	10 to 50	–
		AWG	10 to 6	8 to 0	–
	Flexible stranded wire with end sleeve	(mm²)	6 to 16	10 to 35	–
		AWG	10 to 6	8 to 2	–
	Stripped length of stranded wire (mm)		14	15	–
	Sleeve length (mm)		12-18	16-22	–
Connection with crimp terminal	Flexible stranded wire	(mm²)	–	–	6 to 25
		AWG	–	–	4
	Ring crimp terminal A 17mm or less B 8.3mm以下		–	–	1 (Note 3) / 2 (Note 4) JIS C 2805 or product conforming to JIS R5.5-6 to R22-6
Terminal shape			Dual (philips/slotted) screw (PZ2)	Hexagon socket head bolt	M6(Dual (philips/slotted) pan head screw)
Tightening torque (N·m)			2	6	4

Note 1: Be careful that the peeling length of the connecting wire is different from the MMS unit.
Note 2: Put and crimp a sleeve at the end of flexible twisted wire.
The sleeve should conform with DIN46228 standard.
Also, follow the manufacturer's specification for peeling length and sleeve crimping tool.
Note 3: To connect a wire, put the crimped part of wire up (toward the cover), as is shown in the figure.
Note 4: To connect two wires, the casing length for crimping wire C should be more than 9.5 mm at lower crimp terminal (toward the chassis).

DUO series Manual Motor Starters
BM3 Series Busbar system

■ Busbar connection

• For BM3R
Example of two pin-connection busbars + 3-phase feed-in terminal

(1) Insert the busbar 1 in the left side of MMS terminal screw.

1: BZ0BR03A

(2) Insert the busbar 2 in the right side of MMS terminal screw.

2: BZ0BR02A

(3) Attach the 3-phase feed-in terminal (BZ0BFRA) to the MMS from which the busbar has been inserted in the right side of terminal screw.
(The mounting position of 3-phase feed-in terminal is same too even if one busbar is to be attached.)

Note: When three or more busbars are used, a gap of 6mm will occur as shown below.
The number of gaps is determined by how many busbars you use, as shown in the table below.

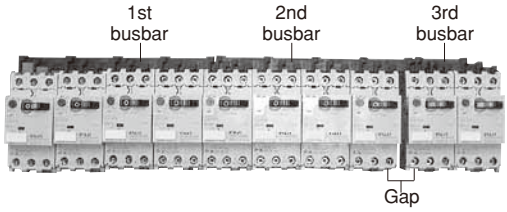

MMS quantity	2	3		4			5					6						7							
Busbar quantity	1	1	2	1	2	3	1	2	2	3	4	2	2	3	3	4	5	2	2	3	3	4	4	5	6
Busbar for 2 MMSs	1		2		1	3		1		2	4	1		2	1	3	5			1		3	2	4	6
Busbar for 3 MMSs		1			1				2	1			1		2	1		1		1	3		2	1	
Busbar for 4 MMSs				1				1					1	1					2	1		1			
Busbar for 5 MMSs							1					1						1							
No. of clearances	0	0	0	0	0	1	0	0	0	1	2	0	0	1	1	2	3	0	0	1	1	2	2	3	4

MMS quantity	8										9												
Busbar quantity	2	3	3	3	4	4	4	5	6	7	2	3	3	3	4	4	4	5	5	6	6	7	8
Busbar for 2 MMSs		1		1	3	2	1	3	5	7		1			2	1		4	3	5	4	6	8
Busbar for 3 MMSs		1	2			1	3	2	1				2	1	1	2	4		1		2	1	
Busbar for 4 MMSs	1		1	2		1						1		2		1			1	1			
Busbar for 5 MMSs	1	1			1						2	1	1		1			1					
No. of clearances	0	1	1	1	2	2	2	3	4	5	0	1	1	1	2	2	2	3	3	4	4	5	6

MMS quantity	10																
Busbar quantity	3	3	4	4	4	4	5	5	5	5	6	6	6	7	7	8	9
Busbar for 2 MMSs			2	1		1	3	2	3	1	5	4	3	6	5	7	9
Busbar for 3 MMSs	1			2	3	1	1	2		4		1	3		2	1	
Busbar for 4 MMSs	1	3	1		1	2		1	2			1		1			
Busbar for 5 MMSs	1		1	1			1				1						
No. of clearances	1	1	2	2	2	2	3	3	3	3	4	4	4	5	5	6	7

Notes: (Number of clearances) = (Busbar quantity) - 2. However, when the calculation results in a negative value, the number of clearances should be zero.

• For BM3V
Example of two busbars + 3-phase feed-in terminal

(1) Insert the busbar 1 in the lower side of MMS terminal plate.

1: BZ0BV02A

(2) Insert the busbar 2 in the upper side of MMS terminal plate.

2: BZ0BV02A

(3) Attach the 3-phase feed-in terminal (BZ0BFVA) to the MMS from which the busbar has been inserted in the lower side of terminal plate. (The mounting position of 3-phase feed-in terminal is same too even if one busbar is to be attached.)

Note: When three or more busbars are to be connected, insert 3rd busbar or later up and down of the terminal plate alternately. (The MMSs are capable of side-by-side mounting.)

■ Description

- The combination starter protects the motor from short-circuit and overcurrent accidents in the three-phase motor circuit within a range between 15kW at 240V AC and 22kW at 415V AC, up to a current level of 50A.
- The manual motor starter provides overload, phase-loss, and short-circuit protections for the motor circuit, and incorporates a dial for flexible adjustment to match the total load current of the motor.
- The magnetic contactor allows remote ON/OFF operation of the motor circuit with high frequency, and features a electrical durability of one million operations.
- The manual motor starter and magnetic contactor are connected via link module and mounted to a base plate.

■ Features

Reduction and space-saving design

- The combination starter consists of a manual motor starter and magnetic contactor that can be assembled by the user to achieve a compact motor control circuit.
- The modular wiring system reduces wiring works, shortens required mounting time, and decreases the mounting area.
- The busbar system and connecting modules make it possible to reduce complicated wiring work.

Conforms to IEC standard

- The combination starter conforms to IEC 60947 requirements for magnetic motor starters and short circuit protective device of coordination types 1 and 2, thus greatly reducing the possibility of an accident spreading to affect other equipment.
- The combination starter can be mounted to IEC top hat rail using the base plate.

Protection against exposure to charged parts

- A busbar system, busbar cover, and terminals with finger protection prevent exposure to charged parts.

■ Busbar system

Various wiring materials available to reduce both wiring and wiring steps.

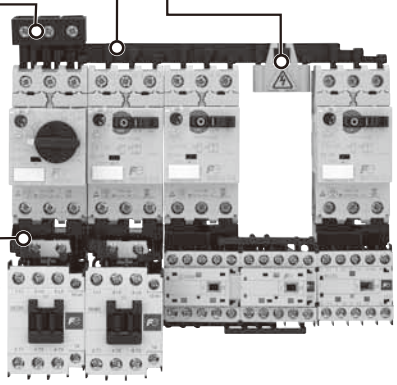

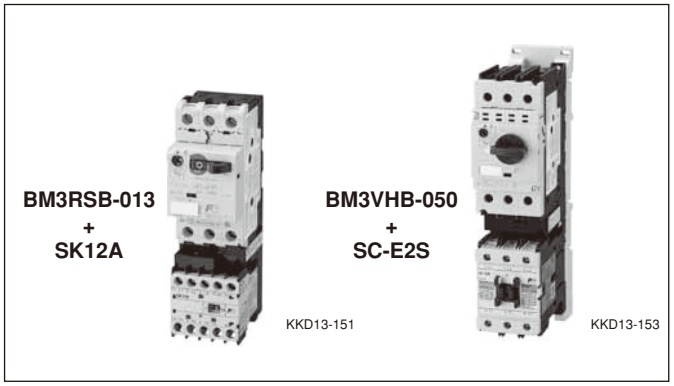

■ Application example

Combining modular equipment enables compact control panel configurations.
Combination starters and busbar systems help to downsize equipment.

- **Example of 8-motor control circuit**

Conventional control panel

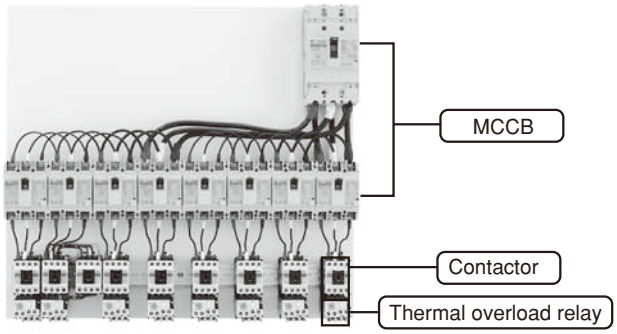

New control panel

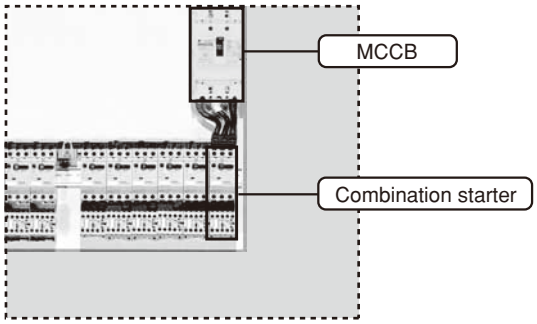

Mounting space: 45% reduction
Wiring space: 90% reduction

DUO series Combination Starters
Protective coordination

■ Protective coordination between MMSs and contactors/combination starters

• **IEC 60947-4-1 Type 1** The rated conditional short-circuit current Iq=50kA/240V AC, 415V AC

Motor capcity and full load current 3-phase				Manual motor starter		Magnetic contactor	
200–240V AC		380–415V AC		Type	Adjustable current range (A)	Type	Rated operational current AC-3 (A)
Capacity (kW)	Current (A)	Capacity (kW)	Current (A)				
–	–	–	–	**BM3RS□-P16** **BM3RH□-P16**	0.1-0.16	**SK06** **SK09** **SK12**	6 9 12
–	–	0.06	0.2	**BM3RS□-P25** **BM3RH□-P25**	0.16-0.25		
0.06	0.35	0.09	0.3	**BM3RS□-P40** **BM3RH□-P40**	0.25-0.4		
–	–	0.12	0.44	**BM3RS□-P63** **BM3RH□-P63**	0.4-0.63		
0.09	0.52	0.18	0.6	**BM3RS□-P63** **BM3RH□-P63**	0.4-0.63		
0.12	0.7	0.25	0.85	**BM3RS□-001** **BM3RH□-001**	0.63-1.0		
0.18	1	0.37	1.1	**BM3RS□-1P6** **BM3RH□-1P6**	1.0-1.6		
0.25	1.5	0.55	1.5	**BM3RS□-1P6** **BM3RH□-1P6**	1.0-1.6		
0.37	1.9	0.75	1.9	**BM3RS□-2P5** **BM3RH□-2P5**	1.6-2.5		
0.55	2.6	1.1	2.7	**BM3RS□-004** **BM3RH□-004**	2.5-4.0		
0.75	3.3	1.5	3.6	**BM3RS□-004** **BM3RH□-004**	2.5-4.0		
1.1	4.7	2.2	4.9	**BM3RS□-6P3** **BM3RH□-6P3**	4.0-6.3	**SK09** **SK12**	9 12
1.5	6.3						
–	–	3	6.5	**BM3RS□-010** **BM3RH□-010**	6.3-10	**SK18** **SK22** **SK32**	18 22 32
2.2	8.5	4	8.5	**BM3RS□-010** **BM3RH□-010**	6.3-10		
3	11.3	5.5	11.5	**BM3RS□-013** **BM3RH□-013**	9-13		
4	15	7.5	15.5	**BM3RH□-016**	11-16		
4	15	7.5	15.5	**BM3RH□-020**	14-20		
5.5	20	11	22	**BM3RH□-025**	19-25	**SK22** **SK32**	22 32
7.5	27	15	29	**BM3RH□-032**	24-32	**SK32**	32
				BM3VHB-032	24-32	**SC-E1**	32
11	38	18.5	35	**BM3VHB-040**	28-40	**SC-E2**	40
–	–	22	41	**BM3VHB-050**	35-50	**SC-E2S**	50

Notes: • The full-load current of each three-phase motor is a reference value.
Check the actual full-load current of the motor before use.

Fuji Electric FA Components & Systems Co., Ltd. Information subject to change without notice

• **IEC 60947-4-1 Type 2** The rated conditional short-circuit current Iq=50kA/240V AC, 415V AC

Motor capcity and full load current 3-phase				Manual motor starter		Magnetic contactor	
200–240V AC		380–415V AC		Type	Adjustable current range (A)	Type	Rated operational current AC-3 (A)
Capacity (kW)	Current (A)	Capacity (kW)	Current (A)				
–	–	–	–	**BM3RS□-P16** **BM3RH□-P16**	0.1-0.16	**SK06** **SK09** **SK12**	6 9 12
–	–	0.06	0.2	**BM3RS□-P25** **BM3RH□-P25**	0.16-0.25		
0.06	0.35	0.09	0.3	**BM3RS□-P40** **BM3RH□-P40**	0.25-0.4		
–	–	0.12	0.44	**BM3RS□-P63** **BM3RH□-P63**	0.4-0.63		
0.09	0.52	0.18	0.6	**BM3RS□-P63** **BM3RH□-P63**	0.4-0.63		
0.12	0.7	0.25	0.85	**BM3RS□-001** **BM3RH□-001**	0.63-1.0		
0.18	1	0.37	1.1	**BM3RS□-1P6** **BM3RH□-1P6**	1.0-1.6		
0.25	1.5	0.55	1.5	**BM3RS□-1P6** **BM3RH□-1P6**	1.0-1.6		
0.37	1.9	0.75	1.9	**BM3RS□-2P5** **BM3RH□-2P5**	1.6-2.5		
0.55	2.6	1.1	2.7	**BM3RS□-004** **BM3RH□-004**	2.5-4.0		
0.75	3.3	1.5	3.6	**BM3RS□-004** **BM3RH□-004**	2.5-4.0		
1.1	4.7	2.2	4.9	**BM3RS□-6P3**	4.0-6.3	**SK18**	18
1.5	6.3			**BM3RH□-6P3**		**SK22**	22
–	–	3	6.5	**BM3RS□-010** **BM3RH□-010**	6.3-10	**SK32**	32
2.2	8.5	4	8.5	**BM3RS□-010** **BM3RH□-010**	6.3-10		
3	11.3	5.5	11.5	**BM3RS□-013** **BM3RH□-013**	9-13		
4	15	7.5	15.5	**BM3RH□-016**	11-16		
4	15	7.5	15.5	**BM3RH□-020**	14-20		
5.5	20	11	22	**BM3RH□-025**	19-25	**SC-E1**	32
				BM3VHB-025	19-25		
7.5	27	15	29	**BM3VHB-032**	24-32		
11	38	18.5	35	**BM3VHB-040**	28-40	**SC-E2**	40

Notes: • The full-load current of each three-phase motor is a reference value.
Check the actual full-load current of the motor before use.

■ Combinations meeting for UL market

• BM3RSB, BM3RHB, BM3RSR, BM3RHR

3-phase motor				Manual motor starters		Adjustable current range (A)	Magnetic contactor
Rated capacity (HP) 220–240V AC	Rated operational current (A)	Rated capacity (HP) 440–480V AC	Rated operational current (A)				
—	—	—	—	**BM3RS□-P16**	**BM3RH□-P16**	0.1-0.16	**SK06** **SK09** **SK12**
—	—	—	—	**BM3RS□-P25**	**BM3RH□-P25**	0.16-0.25	
—	—	—	—	**BM3RS□-P40**	**BM3RH□-P40**	0.25-0.4	
—	—	—	—	**BM3RS□-P63**	**BM3RH□-P63**	0.4-0.63	
—	—	—	—	**BM3RS□-001**	**BM3RH□-001**	0.63-1.0	
—	—	3/4	1.6	**BM3RS□-1P6**	**BM3RH□-1P6**	1.0-1.6	
1/2	2.2	1	2.1	**BM3RS□-2P5**	**BM3RH□-2P5**	1.6-2.5	
3/4	3.2	2	3.4	**BM3RS□-004**	**BM3RH□-004**	2.5-4	
1-1/2	6	3	4.8	**BM3RS□-6P3**	**BM3RH□-6P3**	4-6.3	
—	—	5	7.6	**BM3RS□-010**	**BM3RH□-010**	6.3-10	**SK09** **SK12**
3	9.6	7-1/2	11	**BM3RS□-013**	**BM3RH□-013**	9-13	**SK12**
5	15.2	10	14	**BM3RS□-016**	**BM3RH□-016**	11-16	**SK18** **SK22** **SK32**
5	15.2	10	14	**BM3RS□-020**	**BM3RH□-020**	14-20	
7-1/2	22	15	21	**BM3RS□-025**	**BM3RH□-025**	19-25	**SK22** **SK32**
10	28	20	27	**BM3RS□-032**	**BM3RH□-032**	24-32	**SK32**

• BM3VSB, BM3VHB

3-phase motor				Manual motor starters		Adjustable current range (A)	Magnetic contactor
Rated capacity (HP) 220–240V AC	Rated operational current (A)	Rated capacity (HP) 440–480V AC	Rated operational current (A)				
3	9.6	5	7.6	**BM3VSB-010**	**BM3VHB-010**	6.3 to 10	**SC-E1**
3	9.6	7-1/2	11	**BM3VSB-013**	**BM3VHB-013**	9 to 13	**SC-E1**
5	15.2	10	14	**BM3VSB-016**	**BM3VHB-016**	11 to 16	**SC-E1**
5	15.2	10	14	**BM3VSB-020**	**BM3VHB-020**	14 to 20	**SC-E1**
7-1/2	22	15	21	**BM3VSB-025**	**BM3VHB-025**	19 to 25	**SC-E1**
10	28	20	27	**BM3VSB-032**	**BM3VHB-032**	24 to 32	**SC-E1**
10	28	30	40	**BM3VSB-040**	**BM3VHB-040**	28 to 40	**SC-E2**
15	42	30	40	**BM3VSB-050**	**BM3VHB-050**	35 to 50	**SC-E2S**
20	54	40	52	**BM3VSB-063**	**BM3VHB-063**	45 to 63	**SC-E3**

■ Optional accessories

• Link modules and Spaceres

The link module connects the manual motor starter and magnetic contactor electrically and mechanically.

Description	Applicable MMS	Applicable magnetic contactor	Operating coil	Link modules		Spaceres	
				Type	Mass(g)	Type	Mass(g)
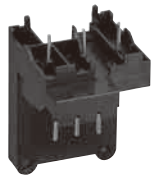 (No.KK11-101)	BM3RSB BM3RHB BM3RSR BM3RHR	SK06A, SK09A, SK12A	AC	**BZ0LRK12AA**	25	-	-
		SK06G, SK09G, SK12G	DC				
		SK06L, SK09L, SK12L					
		SK18A, SK22A	AC	**BZ0LRK22AA**	35	**BZ0LRKACA**	20
		SK18G, SK22G	DC			-	-
		SK32A	AC	**BZ0LRK32AA**	41	**BZ0LRKACA**	20
		SK32G	DC			-	-
	BM3VSB BM3VHB	SC-E1, E2, E2S	AC	**BZ0LVE51AA**	45	-	-
		SC-E1/G, E2/G, E2S/G	DC	**BZ0LVE51GA**	60	-	-
		SC-E3	AC	**BZ0LVE65AA**	65	-	-
		SC-E3/G	DC	**BZ0LVE65GA**	80	-	-

• Base plates

The base plate is a plastic plate to which the combination starter is mounted. The base plate can then be mounted to a panel with screws or to a IEC top hat rail.

Description	Applicable MMS	Applicable magnetic contactor	Operating coil	Type	Mass(g)
(No.KK01-155)	BM3VSB BM3VHB	SC-E1, E2, E2S	AC	**BZ0BPVE51A**	160
		SC-E1/G, E2/G, E2S/G	DC		
		SC-E3	AC	**BZ0BPVE65A**	195
		SC-E3/G	DC		

• Base plate coupling kit

The base plate coupling kit is used to couple two base plates that are mounted with combination starters consisting of manual motor starters and SC-EMRM reversing magnetic contactors.

Description	Applicable base plate	Type	Mass(g)
(No.KK03-036)	BZ0BPVE51A	**BZ0BPCA**	4
	BZ0BPVE65A		

DUO series Combination Starters Configuration

■ Combination starter configurations

• **BM3RS□+SK06 to 12**

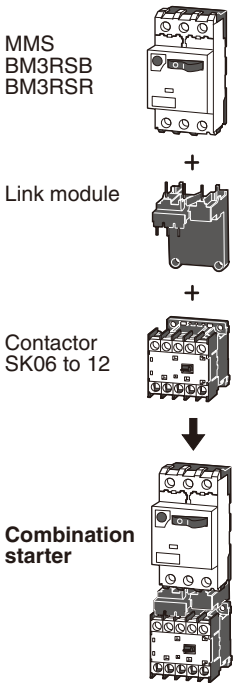

• **BM3RH□ + SK06 to 12**

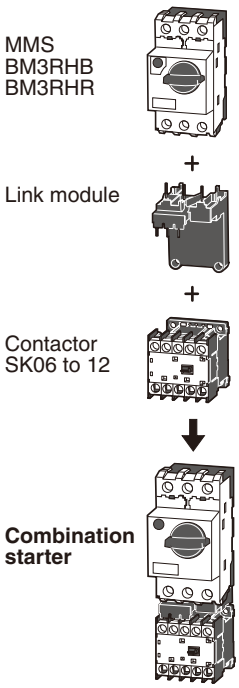

• **BM3RS□+SK18A to SK32A**

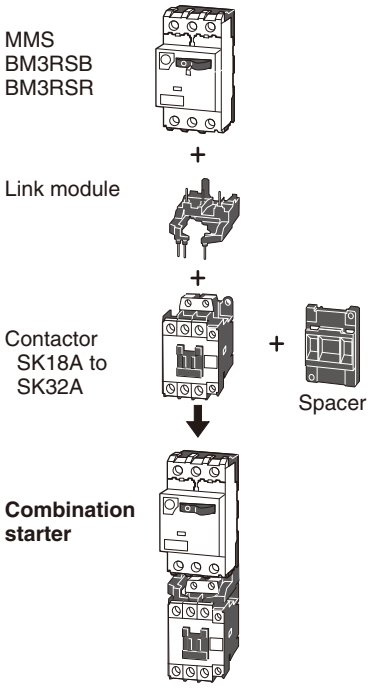

• **BM3RH□+SK18A to SK32A**

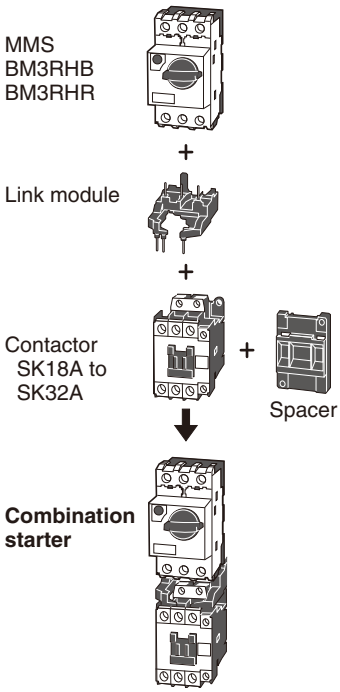

• **BM3RS□+SK18G to SK32G**

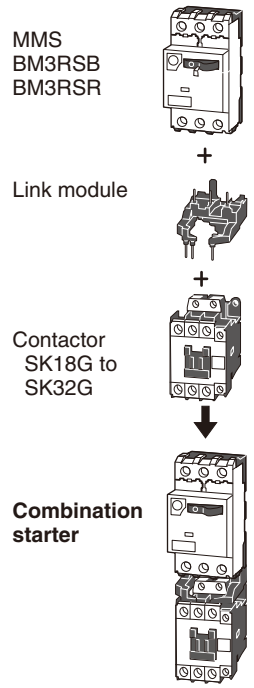

• **BM3RH□+SK18G to SK32G**

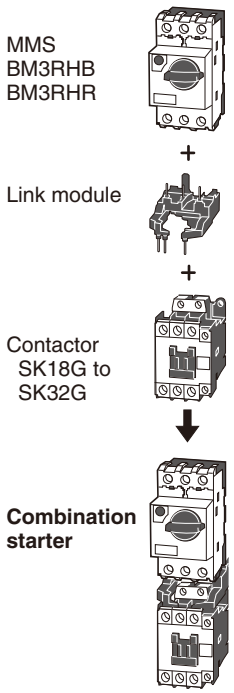

• **BM3V□B+SC-E1 to E2S**

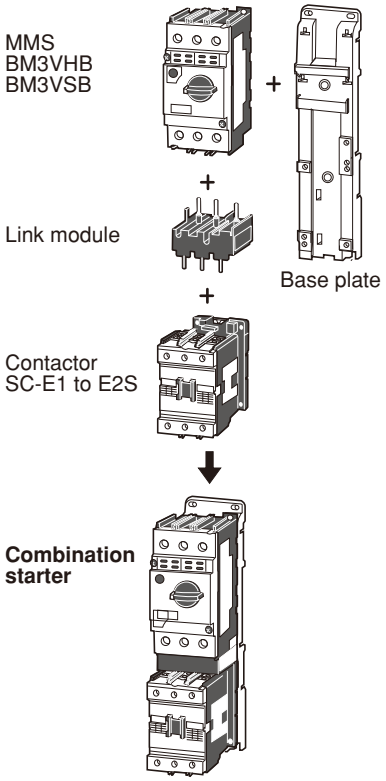

• **BM3V□B+SC-E3**

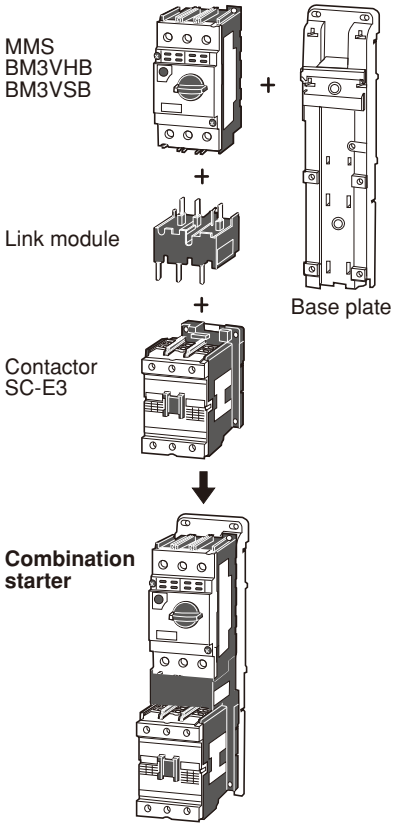

DUO series Combination Starters Dimensions

■ Dimensions, mm

• **Base plates**

BZ0BPVE51A

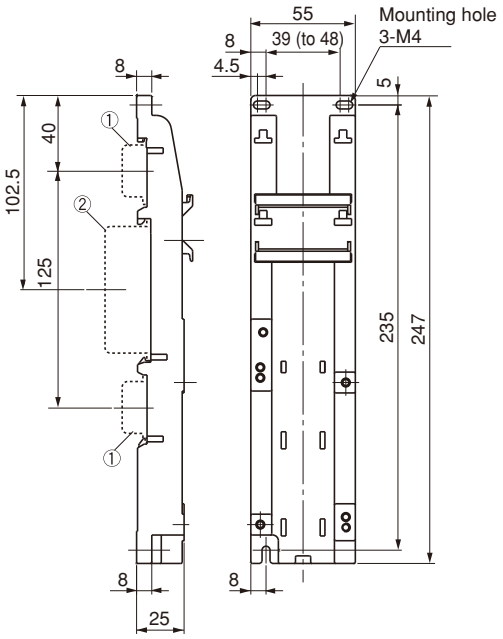

①35mm wide rail (hight 15mm) x 2
②75mm wide rail (hight 25mm) x 1

Base plate type	Applicable type MMS	Contactor
BZ0BPVE51A	BM3VSB BM3VHB	SC-E1, E2, E2S, E1/G, E2/G, E2S/G

BZ0BPVE65A

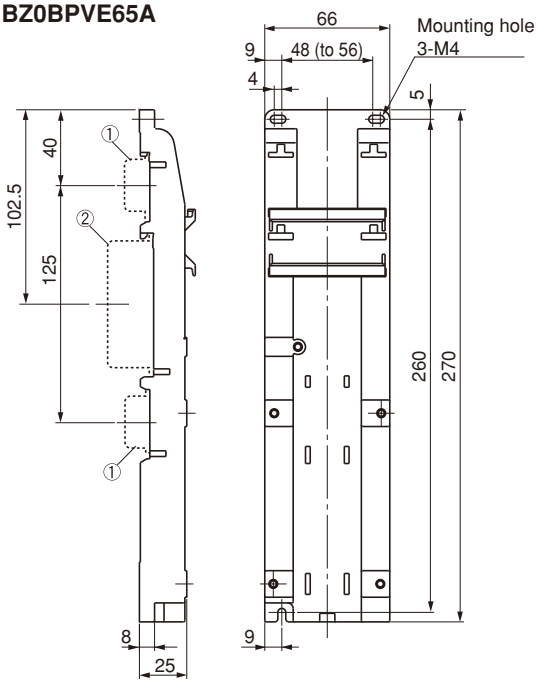

①35mm wide rail (hight 15mm) x 2
②75mm wide rail (hight 25mm) x 1

Base plate type	Applicable type MMS	Contactor
BZ0BPVE65A	BM3VSB BM3VHB	SC-E3, E3/G

■ Dimensions, mm

• **Combination**

BM3RS□ + SK06 to SK12

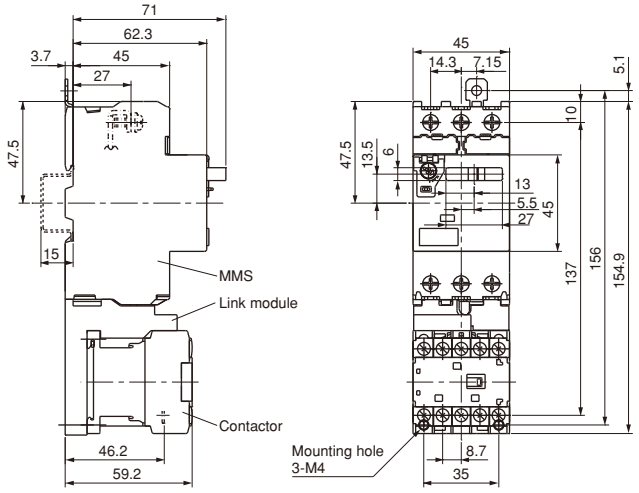

Rail mounting ①35mm wide rail (height 15mm) × 1

MMS	Contactors	Link module	Mass (g)
BM3RSB	SK06A, SK09A, SK12A	BZ0LRK12AA	520
BM3RSR	SK06G, SK09G, SK12G SK06L, SK09L, SK12L		550

BM3RH□ + SK06 to SK12

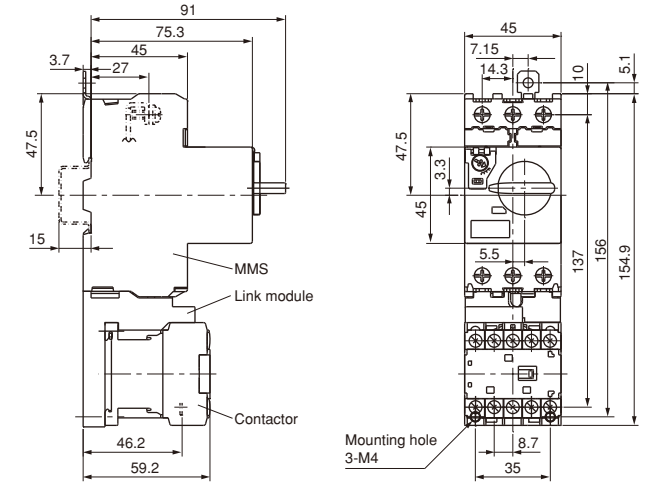

Rail monting ①35mm wide rail (height 15mm) × 1

MMS	Contactors	Link module	Mass (g)
BM3RHB	SK06A, SK09A, SK12A	BZ0LRK12AA	540
BM3RHR	SK06G, SK09G, SK12G SK06L, SK09L, SK12L		570

DUO series Combination Starters Dimensions

■ Dimensions, mm

• **Combination**

BM3RS□ + SK18A, SK22A

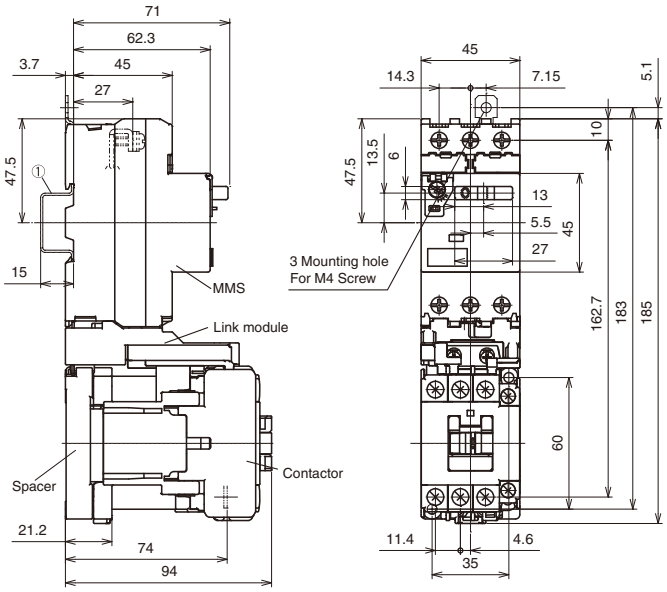

Rail mounting ①35mm wide rail (height 15mm) × 1

MMS	Contactors	Link module	Mass (g)
BM3RSB BM3RSR	SK18A, SK22A	BZ0LRK22AA + BZ0LRKACA	750

BM3RS□ + SK18G, SK22G

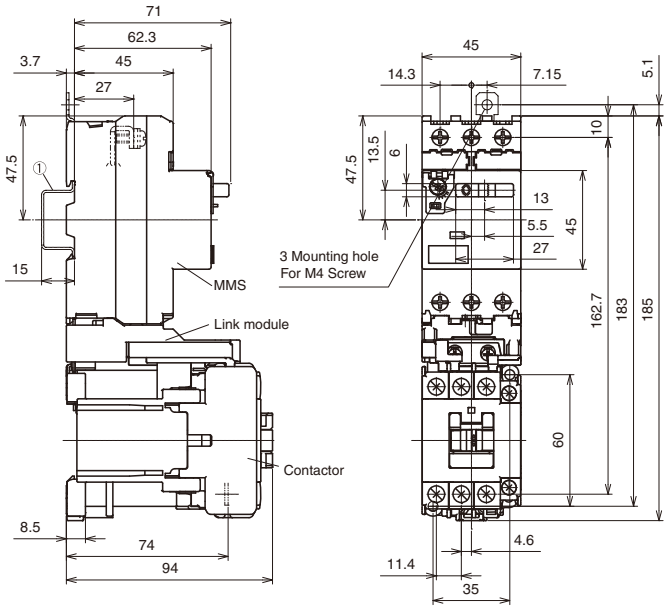

Rail mounting ①35mm wide rail (height 15mm) × 1

MMS	Contactors	Link module	Mass (g)
BM3RSB BM3RSR	SK18G, SK22G	BZ0LRK22AA	840

■ Dimensions, mm

• **Combination**

BM3RH□ + SK18A, SK22A

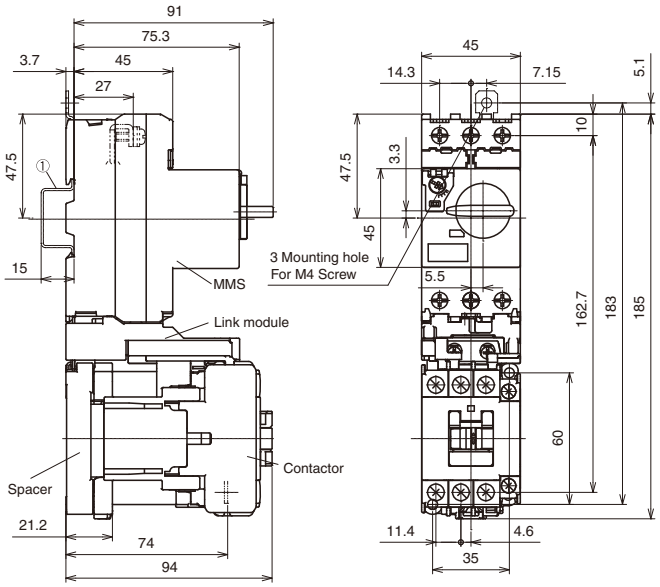

Rail mounting ①35mm wide rail (height 15mm) × 1

MMS	Contactors	Link module	Mass (g)
BM3RHB BM3RHR	SK18A, SK22A	BZ0LRK22AA + BZ0LRKACA	770

BM3RH□ + SK18G, SK22G

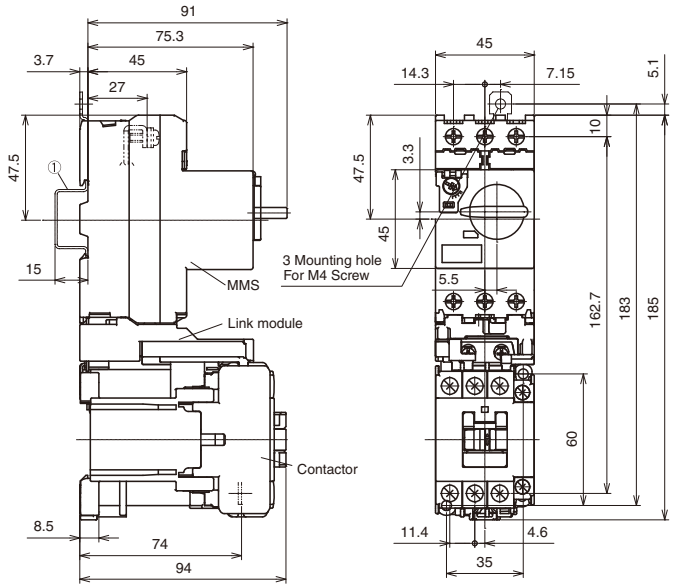

Rail mounting ①35mm wide rail (height 15mm) × 1

MMS	Contactors	Link module	Mass (g)
BM3RHB BM3RHR	SK18G, SK22G	BZ0LRK22AA	860

DUO series Combination Starters Dimensions

■ Dimensions, mm

• **Combination**

BM3RS□ + SK32A

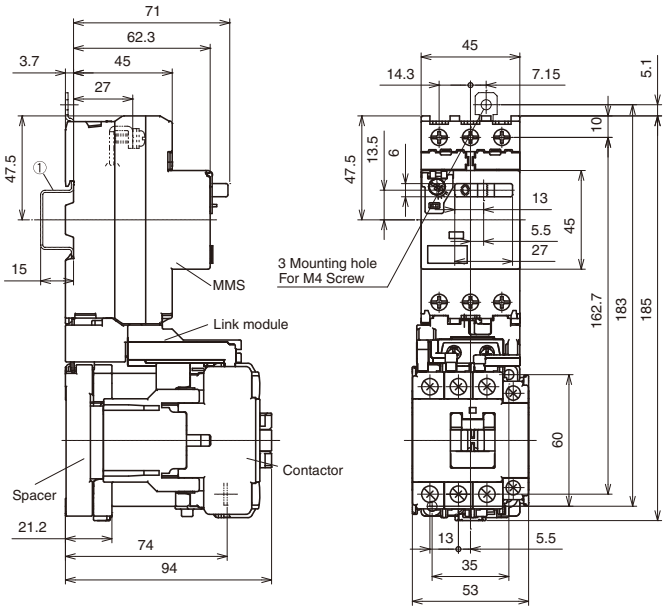

Rail mounting ①35mm wide rail (height 15mm) × 1

MMS	Contactors	Link module	Mass (g)
BM3RSB BM3RSR	SK32A	BZ0LRK32AA + BZ0LRKACA	780

BM3RS□ + SK32G

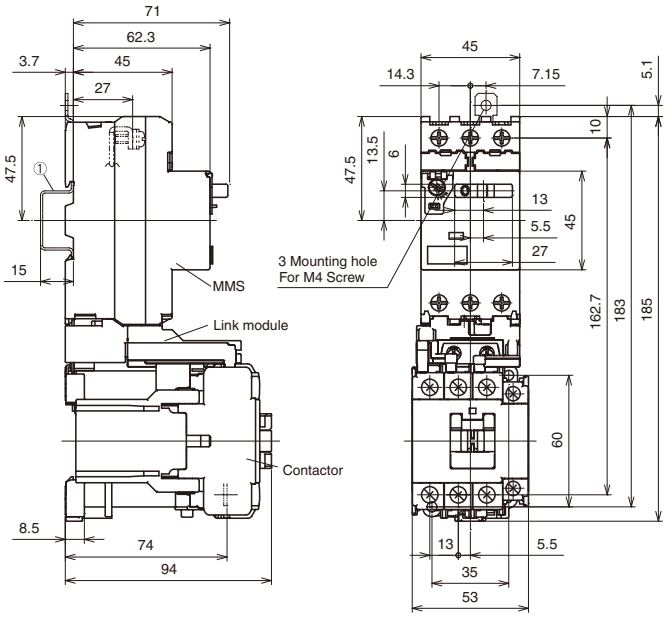

Rail mounting ①35mm wide rail (height 15mm) × 1

MMS	Contactors	Link module	Mass (g)
BM3RSB BM3RSR	SK32G	BZ0LRK32AA	870

Fuji Electric FA Components & Systems Co., Ltd.
Information subject to change without notice

■ Dimensions, mm

• **Combination**

BM3RH□ + SK32A

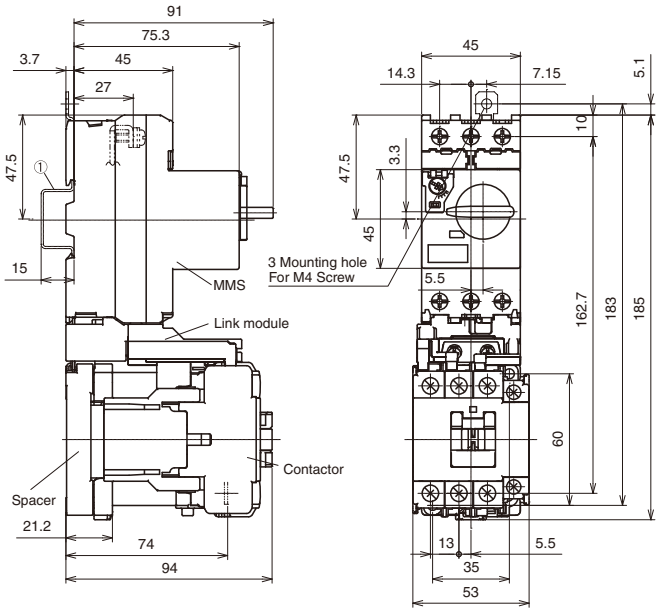

Rail mounting ①35mm wide rail (height 15mm) × 1

MMS	Contactors	Link module	Mass (g)
BM3RHB BM3RHR	SK32A	BZ0LRK32AA + BZ0LRKACA	800

BM3RH□ + SK32G

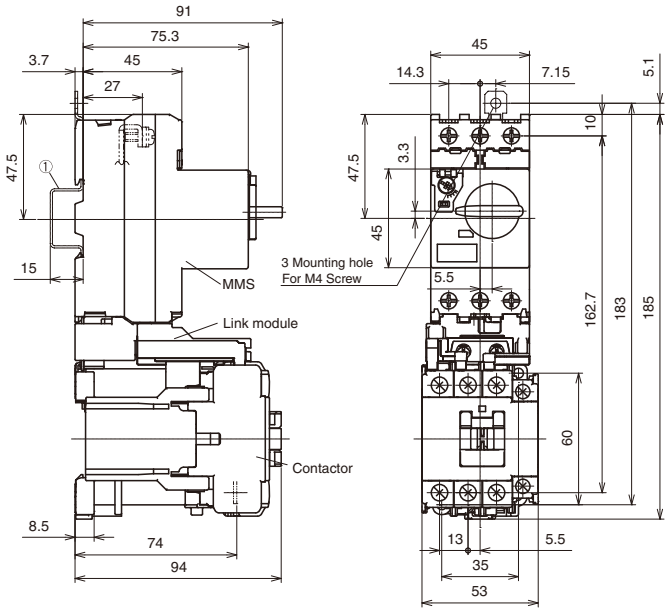

Rail mounting ①35mm wide rail (height 15mm) × 1

MMS	Contactors	Link module	Mass (g)
BM3RHB BM3RHR	SK32G	BZ0LRK32AA	890

DUO series Combination Starters
Dimensions

■ Dimensions, mm

• **Combination**

BM3V□B + SC-E1, E2, E3

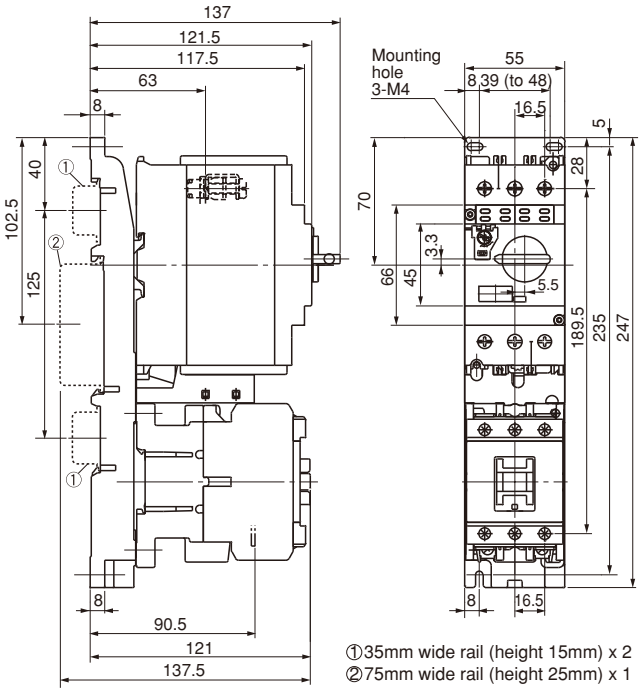

MMS	Contactors	Link module	Base plate	Mass (g)
BM3VSB BM3VHB	SC-E1, E2, E2S	BZ0LVE51AA	BZ0BPVE51A	1,580

BM3V□B + SC-E1/G, E2/G, E2S/G

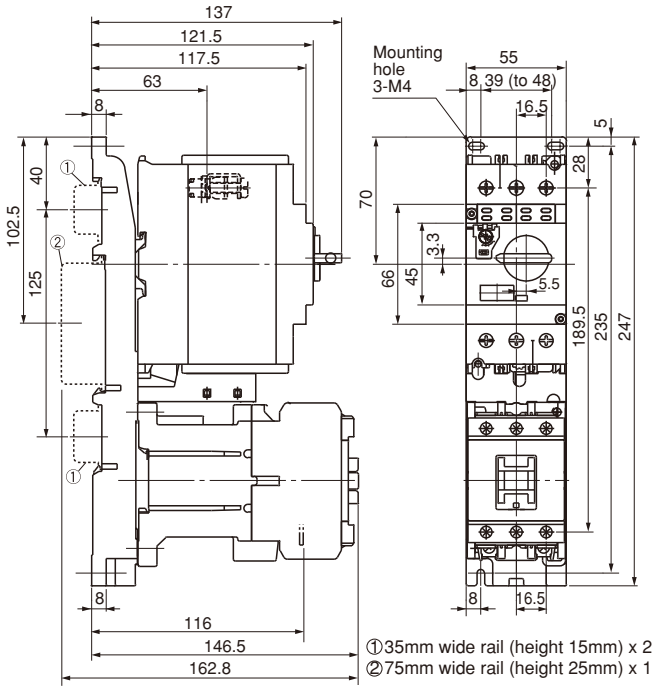

MMS	Contactors	Link module	Base plate	Mass (g)
BM3VSB BM3VHB	SC-E1/G, E2/G, E2S/G	BZ0LVE51GA	BZ0BPVE51A	1,810

BM3V□B + SC-E3

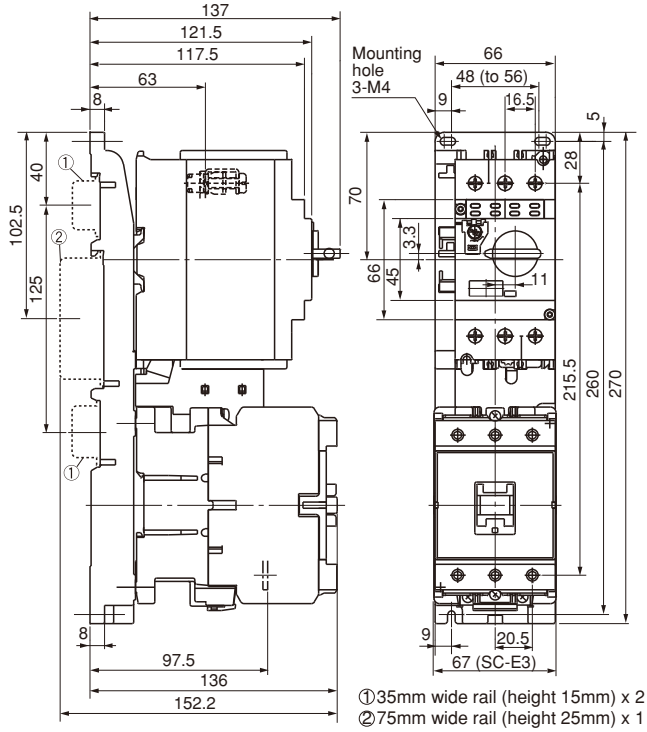

MMS	Contactors	Link module	Base plate	Mass (g)
BM3VSB BM3VHB	SC-E3	BZ0LVE65AA	BZ0BPVE65A	2,080

BM3V□B + SC-E3/G

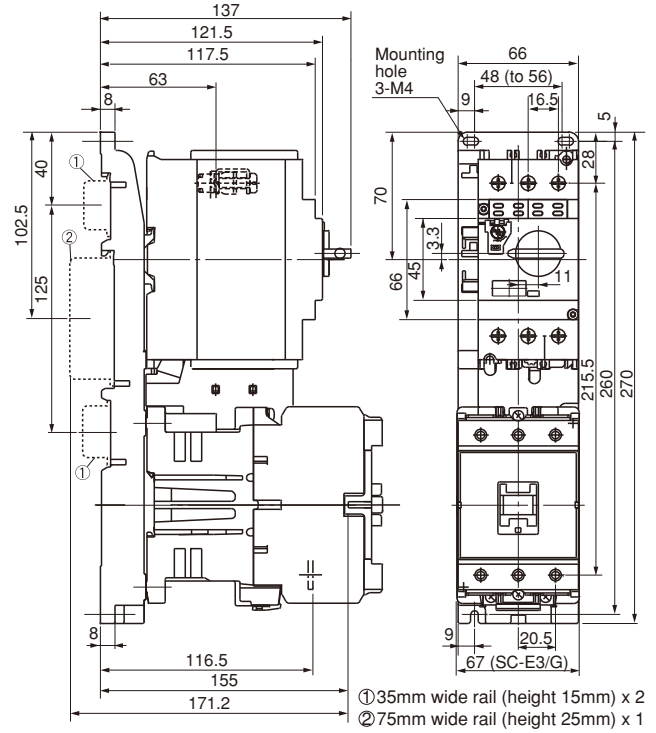

MMS	Contactors	Link module	Base plate	Mass (g)
BM3VSB BM3VHB	SC-E3/G	BZ0LVE65GA	BZ0BPVE65A	2,400

■ Standard Models

Series			SK Series		
Frame			06	09	12
Magnetic Contactor appearance			(KKD14-157)		
Thermal Overload Relay appearance			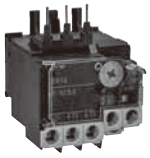 (KKD14-166)		
Type	Magnetic Contactors	AC-operated types	**SK06A**	**SK09A**	**SK12A**
		DC-operated types (2.4W)	**SK06G**	**SK09G**	**SK12G**
		DC-operated types (1.2W)	**SK06L**	**SK09L**	**SK12L**
	Thermal Overload Relay		**TK12**		
Rated insulation voltage (IEC)			690V	690V	690V
Rated impulse withstand voltage (IEC)			6kV	6kV	6kV
Rated frequency			50-60Hz	50-60Hz	50-60Hz
Main circuit ratings	3-phase squirrel-cage motor capacity [kW] AC-3 IEC60947-4-1	200-240V	1.5kW	2.2kW	3kW
		380-440V	2.2kW	4kW	5.5kW
		500-550V	3kW	4kW	5.5kW
		600-690V	3kW	4kW	4kW
	Rated current Ie [A] AC-3	200-240V	6A	9A	12A
		380-440V	6A	9A	12A
		500-550V	5A	7A	9A
		600-690V	3.5A	5A	5A
	Conventional free air thermal current (Rated continuous current) Ith [A]		20A	20A	20A
Performances	Operating cycles per hour [times/hour]		1800	1800	1800
	Durability	Mechanical	10 million	10 million	10 million
		Electrical (AC-3)	1 million	1 million	1 million
Dimensions W×H×D [mm]			45×48×49	45×48×49	45×48×49
Options	Auxiliary Contact Blocks	Front mounting (2-pole)	◎		
		Front mounting (4-pole) *1	◎		
	Mechanical Interlock Unit		◎		
	Coil Surge Suppression Unit		◎		
	Main Circuit Surge Suppression Unit		◎		
Standards			c UL us LISTED, TÜV Rheinland, CE, CCC, KC		

Note: *1 These products cannot be combined with the SK□L.

Magnetic-Contactors
SK Series Standard Models

■ Standard Models

Series			SK Series		
Frame			18	22	32
Magnetic Contactor appearance			New (KKD14-083)		New (KKD14-179)
Thermal Overload Relay appearance			New (KKD14-095)		New 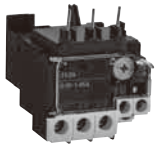 (KKD14-113)
Type	Magnetic Contactors	AC-operated types	**SK18A**	**SK22A**	**SK32A**
		DC-operated types (2.4W)	**SK18G**	**SK22G**	**SK32G**
		DC-operated types (1.2W)	–	–	–
	Thermal Overload Relay		**TK25**		**TK26**
Rated insulation voltage (IEC)			690V	690V	690V
Rated impulse withstand voltage (IEC)			6kV	6kV	6kV
Rated frequency			50-60Hz	50-60Hz	50-60Hz
Main circuit ratings	3-phase squirrel-cage motor capacity [kW] AC-3 IEC60947-4-1	200-240V	4.5kW	5.5kW	7.5kW
		380-440V	7.5kW	11kW	15kW
		500-550V	7.5kW	11kW	15kW
		600-690V	7.5kW	7.5kW	11kW
	Rated current Ie [A] AC-3	200-240V	18A	22A	32A
		380-440V	18A	22A	32A
		500-550V	13A	17A	24A
		600-690V	9A	9A	15A
	Conventional free air thermal current (Rated continuous current) Ith [A]		32A	32A	40A
Performances	Operating cycles per hour [times/hour]		1800	1800	1200
	Durability	Mechanical	5 million	5 million	5 million
		Electrical (AC-3)	1 million	1 million	1 million
Dimensions W×H×D [mm]		AC-operated	45×81×81	45×81×81	53×81×81
		DC-operated	45×81×94	45×81×94	53×81×94
Options	Auxiliary Contact Blocks	Front mounting (2-pole)	◎		
		Front mounting (4-pole)	—		
		Side-mounting	◎		
	Mechanical Interlock Unit		◎		
	Coil Surge Suppression Unit		◎		
	Main Circuit Surge Suppression Unit		◎		
Standards					

■ Thermal Overload Relays

Thermal Overload Relay appearance	(KKD14-166)	(KKD14-095)	(KKD14-113)
Type	**TK12**	**TK25**	**TK26**
Protection	Overload and phase-loss protection		
Ampere setting range The heating element code is given in brackets.	0.1-0.15A [P10] 0.13-0.2A [P13] 0.18-0.27A [P18] 0.24-0.36A [P24] 0.34-0.52A [P34] 0.48-0.72A [P48] 0.64-0.96A [P64] 0.8-1.2A [P80] 0.95-1.45A [P95] 1.1-1.65A [1P1]	1.4-2.1A [1P4] 1.7-2.6A [1P7] 2.2-3.4A [2P2] 2.8-4.2A [2P8] 4-6A [004] 5-7.5A [005] 6-9A [006] 7-10.5A [007] 9-13A [009] 12-18A [012]*1	16-22A [016]*1 20-26A [020]*2 26-32A [026]*2

Note: *1 For TK25, TK26 only.
*2 For TK26 only.

■ Production Models

Magnetic Contactors and Magnetic Starters

Product		Type *1	Frame size					
			06	09	12	18	22	32
Magnetic Contactors	AC-operated types	SK □ A	○	○	○	○	○	○
	DC-operated types (standard)	SK □ G	○	○	○	○	○	○
	DC-operated types (low power consumption)	SK □ L	○	○	○	–	–	–
Reversing Contactors	AC-operated types	SK □ AR	○	○	○	○	○	○
	DC-operated types (standard)	SK □ GR	○	○	○	○	○	○
	DC-operated types (low power consumption)	SK □ LR	○	○	○	–	–	–

Note: *1 In the □ mark, is replaced with the frame size.

Magnetic-Contactors
SK Series Type Number Nomenclature

■ Type Number Nomenclature

● Type Number Nomenclature (Type Number = Product Code)

• Magnetic Contactors

SK 12 A H R - 2 01 W

Basic type number
Mini-Contactor

Frame size
06, 09, 12, 18, 22 or 32

Operating method
A : AC-operated type
G : DC-operated type (2.4W)
L : DC-operated type (1.2W) SK06, 09, 12

Auxiliary contact
Blank : Bifurcated contact
H : Single button contact

Non-reversing or reversing
Blank : Non-reversing
R : Reversing

Reversing conductor
W : Wire
M : Molded SK06, 09, 12 (Only for Combination Starter)

Note: Specify this for a reversing model.

Auxiliary contact arrangement
10 : 1NO
01 : 1NC

Coil voltage

AC operation		E	24V AC
		F	48V AC
		1	100V AC
		H	110V AC
		K	120V AC
		2	200V AC
		M	220V AC
		P	240V AC
		S	380V AC
		4	400V AC
		T	440V AC
		5	500V AC
DC operation	2.4W (G)	B	12V DC
		E	24V DC
		F	48V DC
		G	60V DC
		1	100V DC
		H	110V DC
		K	120V DC
		2	200V DC
		Y	210V DC
		M	220V DC
	1.2W (L)	B	12V DC
		E	24V DC
		F	48V DC

Note: Products cannot be manufactured for all possible type numbers.

• Thermal Overload Relays

TK 12 W A - 009

Basic type number
TK : 2E Thermal Overload Relay (with phase-loss detection)

Frame size
12, 25, 26

Mounting
W : On-contactor mounting (* TK12 only)

Reset method
Blank : Manual reset (standard)
A : Automatic reset

Ampere setting range
P10 : 0.1-0.15A
P13 : 0.13-0.2A
P18 : 0.18-0.27A
P24 : 0.24-0.36A
P34 : 0.34-0.52A
P48 : 0.48-0.72A
P64 : 0.64-0.96A
P80 : 0.8-1.2A
P95 : 0.95-1.45A
1P1 : 1.1-1.65A
1P4 : 1.4-2.1A
1P7 : 1.7-2.6A
2P2 : 2.2-3.4A
2P8 : 2.8-4.2A
004 : 4-6A
005 : 5-7.5A
006 : 6-9A
007 : 7-10.5A
009 : 9-13A
012 : 12-18A
016 : 16-22A
020 : 20-26A
026 : 26-32A

Auxiliary Relays

■ Type Number Nomenclature

● Type Number Nomenclature
• SK-Series Auxiliary Relays

SKH4 A H - 1 22

Basic type
SK-Series Auxiliary Relay

Operating method
A : AC-operated types
G : DC-operated types (2.4W)
L : DC-operated types (1.2W)

Auxiliary contact
Blank : Bifurcated contact
H : Single button contact

Auxiliary contact arrangement
40 : 4NO
31 : 3NO+1NC
22 : 2NO+2NC

Coil voltage

AC operation		E	24V AC
		F	48V AC
		1	100V AC
		H	110V AC
		K	120V AC
		2	200V AC
		M	220V AC
		P	240V AC
		S	380V AC
		4	400V AC
		T	440V AC
		5	500V AC
DC operation	2.4W (G)	B	12V DC
		E	24V DC
		F	48V DC
		G	60V DC
		1	100V DC
		H	110V DC
		K	120V DC
		2	200V DC
		Y	210V DC
		M	220V DC
	1.2W (L)	B	12V DC
		E	24V DC
		F	48V DC

Ratings

■ Main Circuit Ratings

● IEC-conformance Ratings (IEC 60947-4-1, EN 60947-4-1, and VDE 0660)

Type	Max. motor capacity [kW]				Operational current [A]				Conventional free air thermal current [A] (Rated thermal current)
	3-phase squirrel-cage motor (AC-3)				3-phase squirrel-cage motor (AC-3)				
	200-240V	380-440V	500-550V	600-690V	200-240V	380-440V	500-550V	600-690V	
SK06	1.5	2.2	3	3	6	6	5	3.5	20
SK09	2.2	4	4	4	9	9	7	5	20
SK12	3	5.5	5.5	4	12	12	9	5	20
SK18	4.5	7.5	7.5	7.5	18	18	13	9	32
SK22	5.5	11	11	7.5	22	22	17	9	32
SK32	7.5	15	15	11	32	32	24	15	40

Note: AC-3 electrical durability: 1,000,000 operations

● UL/CSA-conformance Ratings (UL60947-4-1A*1 and CSA C22.2)

Type	Max. motor capacity [HP]				Operational current [A]				Rated continuous current [A]
	3-phase motor				3-phase motor				
	200V	220-240V	440-480V	550-600V	200V	220-240V	440-480V	550-600V	
SK06	1-1/2	2	3	5	6.9	6.8	4.8	6.1	20
SK09	2	3	5	5	7.8	9.6	7.6	6.1	20
SK12	3	3	5	5	11	9.6	7.6	6.1	20
SK18	5	5	10	7-1/2	17.5	15.2	14	9	32
SK22	5	7-1/2	15	10	17.5	22	21	11	32
SK32	7-1/2	10	20	15	25.3	28	27	17	40

Type	Max. motor capacity [HP]			Operational current [A]			Rated continuous current [A]
	Single-phase motor			Single-phase motor			
	110-120V	200V	220-240V	110-120V	200V	220-240V	
SK06	1/2	3/4	1	9.8	7.9	8	20
SK09	3/4	1	1-1/2	13.8	9.2	10	20
SK12	1	1-1/2	2	16	11.5	12	20
SK18	1	2	2	16	13.8	12	32
SK22	1-1/2	3	3	20	19.6	17	32
SK32	2	3	5	24	19.6	28	40

Note: Use wires that are rated for 75°C.
*1 The standard for Industrial Control Equipment UL 508 has been harmonized with the relevant product standards of the IEC standard for Low-Voltage Switchgear and Controlgear IEC 60947.

■ Auxiliary Circuit Ratings

● IEC-conformance Ratings (Standard Models: Bifurcated Contact)

Type	Conventional free air thermal current [A] (Rated thermal current)	Making and breaking current (AC)	Rated operational current [A]						Minimum voltage and current
			AC rated operational voltage [V]	AC-15 (Ind. load)	AC-12 (Res. load)	DC rated operational voltage [V]	DC-13 (Ind. load)	DC-12 (Res. load)	
SK06 SK09 SK12 SKH4	10	30	100-120	3	6	24	2	3	5V DC, 3mA
		30	200-240	3	6	48	1	2	
		10	380-440	1	6	110	0.3	1.5	
		5	500-600	0.5	3	220	0.2	0.5	
SK18 SK22 SK32	10	60	100-120	6	10	24	3	5	5V DC, 3mA
		30	200-240	3	8	48	1.5	3	
		15	380-440	1.5	5	110	0.55	2.5	
		12	500-600	12	5	220	0.27	1	

Note: The failure level is 10^{-7} for a normal environment without dust, dirt, or corrosive gas.
The ratings of additional auxiliary contacts are the same as those given above.

● IEC-conformance Ratings (Single Button Contact)

Type	Conventional free air thermal current [A] (Rated thermal current)	Making and breaking current (AC)	Rated operational current [A]						Minimum voltage and current
			AC rated operational voltage [V]	AC-15 (Ind. load)	AC-12 (Res. load)	DC rated operational voltage [V]	DC-13 (Ind. load)	DC-12 (Res. load)	
SK06□H SK09□H SK12□H SKH4□H	10	60	100-120	6	10	24	4	8	24V DC, 10mA
		60	200-240	6	10	48	1	3.5	
		60	380-440	6	10	110	0.5	2.5	
		30	500-600	3	5	220	0.25	0.8	
SK18□H SK22□H SK32□H	10	60	100-120	6	10	24	5	10	24V DC, 10mA
		60	200-240	6	10	48	1.5	5	
		40	380-440	4	10	110	0.7	4	
		40	500-600	4	10	220	0.27	1	

Note: The failure level is 10^{-7} for a normal environment without dust, dirt, or corrosive gas.
The ratings of additional auxiliary contacts are the same as those given above.

● UL/CSA-conformance Ratings (Bifurcated Contact or Single Button Contact)

Type	Rated continuous current [A]	Rated operational current [A]						Rating code	
		AC			DC				
		Rated operational voltage [V]	Making	Breaking	Rated operational voltage [V]	Making	Breaking	AC	DC
SK06 SK09 SK12 SK18 SK22 SK32 SKH4	10	120	60	6	125	0.55	0.55	A600	Q300
		240	30	3					
		480	15	1.5	250	0.27	0.27		
		600	12	1.2					

Magnetic-Contactors
SK Series Ratings

■ Operating Coil Voltages

● AC-operated Types

Type	Order voltage	Code	Coil voltage and frequency
SK06A **SK09A** **SK12A** **SK18A** **SK22A** **SK32A**	24V AC	E	24V 50Hz / 24-26V 60Hz
	48V AC	F	48V 50Hz / 48-52V 60Hz
	100V AC	1	100V 50Hz / 100-110V 60Hz
	110V AC	H	100-110V 50Hz / 110-120V 60Hz
	120V AC	K	110-120V 50Hz / 120-130V 60Hz
	200V AC	2	200V 50Hz / 200-220V 60Hz
	220V AC	M	200-220V 50Hz / 220-240V 60Hz
	240V AC	P	220-240V 50Hz / 240-260V 60Hz
	380V AC	S	346-380V 50Hz / 380-420V 60Hz
	400V AC	4	380-400V 50Hz / 400-440V 60Hz
	440V AC	T	415-440V 50Hz / 440-480V 60Hz
	500V AC	5	480-500V 50Hz / 500-550V 60Hz

● DC-operated Types (2.4W)

Type	Order voltage	Code	Coil voltage
SK06G **SK09G** **SK12G** **SK18G** **SK22G** **SK32G**	12V DC	B	12V DC
	24V DC	E	24V DC
	48V DC	F	48V DC
	60V DC	G	60V DC
	100V DC	1	100V DC
	110V DC	H	110V DC
	120V DC	K	120V DC
	200V DC	2	200V DC
	210V DC	Y	210V DC
	220V DC	M	220V DC

● DC-operated Types (1.2W)

Type	Order voltage	Code	Coil voltage
SK06L **SK09L** **SK12L**	12V DC	B	12V DC
	24V DC	E	24V DC
	48V DC	F	48V DC

■ Operating Coil Characteristics

● AC-operated Types

Type	Power consumption [VA]				Watt loss [W]		Pick-up voltage [V]		Drop-out voltage [V]		Operating times [ms]	
	Inrush		Sealed								Coil ON → Contact ON	Coil OFF → Contact OFF
	200V 50Hz	220V 60Hz	200V 50Hz	220V 60Hz	200V 50Hz	220V 60Hz	50Hz	60Hz	50Hz	60Hz		
SK06A SK09A SK12A	22	25	4.5	4.5	1.2	1.3	122-135	128-138	80-89	83-96	17-26	8-11
SK18A SK22A	90	95	9	9	2.7	2.8	118-136	130-146	75-106	88-120	9-20	5-16
SK32A	90	95	9	9	2.7	2.8	118-136	130-146	75-106	88-120	9-20	5-16

Note 1. The characteristics are for the following coil ratings: 200V, 50Hz/200 to 220V, 60Hz.
Note 2. The electromagnet capacity is the same even when the rated coil voltage is not 200V AC.
Note 3. The operating times are for 200V AC, 50Hz.
Note 4. The pick-up voltage and drop-out voltage for a 100V (100V AC, 50 Hz/100 to 110V, 60Hz) coil are approximately half of the values that are given in the above table.
Note 5. The values in the above table are examples for a cold status at 20°C.

● DC-operated Types (2.4W)

Type	Power consumption [W]		Time constant [ms]	Pick-up voltage [V]	Drop-out voltage [V]	Operating times [ms]	
	Inrush	Sealed	Sealed			Coil ON → Contact ON	Coil OFF → Contact OFF
	24V	24V					
SK06G SK09G SK12G	2.4	2.4	20	10-11	4-6	22-24	5-6
SK18G SK22G	2.4	2.4	33	15-16	3.5-5	65-72	18-23
SK32G	2.4	2.4	33	15-16	3.5-5	65-72	18-23

Note 1. The characteristics are for the following coil rating: 24V DC.
Note 2. The electromagnet capacity is the same even when the rated coil voltage is not 24V DC.
Note 3. The values in the above table are examples for a cold status at 20°C.
Note 4. This operating time is based on a reference value and it is not a guaranteed operating time.

● DC-operated Types (1.2W)

Type	Power consumption [W]		Time constant [ms]	Pick-up voltage [V]	Drop-out voltage [V]	Operating times [ms]	
SK06L SK09L SK12L	Inrush	Sealed	Sealed			Coil ON → Contact ON	Coil OFF → Contact OFF
	24V	24V					
	1.2	1.2	20	13-14	4-5	30-33	8-9

Note 1. The characteristics are for the following coil rating: 24V DC.
Note 2. The electromagnet capacity is the same even when the rated coil voltage is not 24V DC.
Note 3. The values in the above table are examples for a cold status at 20°C.
Note 4. This operating time is based on a reference value and it is not a guaranteed operating time.

Magnetic-Contactors
SK Series Ratings

■ Performances

Type	Rated operational voltage [V]	Rated operational current [A]	Making/breaking current [A]		Operating cycles per hour [times/hour]	Durability (Operations)	
			Making	Breaking		Mechanical	Electrical
SK06	220	6	72	60	1800	10 million	1 million
	440	6	72	60			
SK09	220	9	108	90			
	440	9	108	90			
SK12	220	12	144	120			
	440	12	144	120			
SK18	220	18	216	180		5 million	
	440	18	180	144			
SK22	220	22	264	220			
	440	22	220	176			
SK32	220	32	320	260	1200		
	440	32	320	256			

■ AC-3 Breaking Current and Electrical Durability

● SK06 to SK32

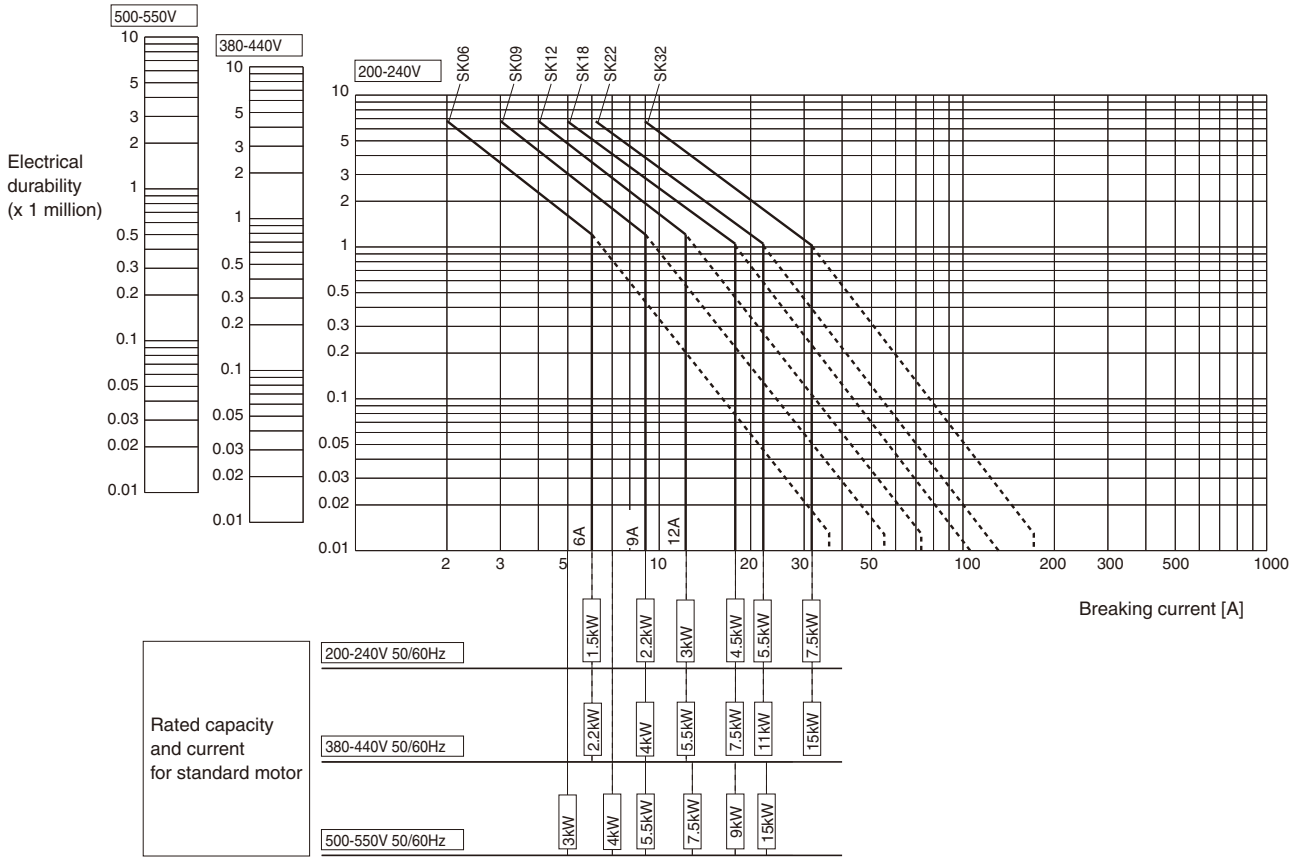

Information subject to change without notice

■ AC-1 Breaking Current and Electrical Durability

● SK06 to SK32

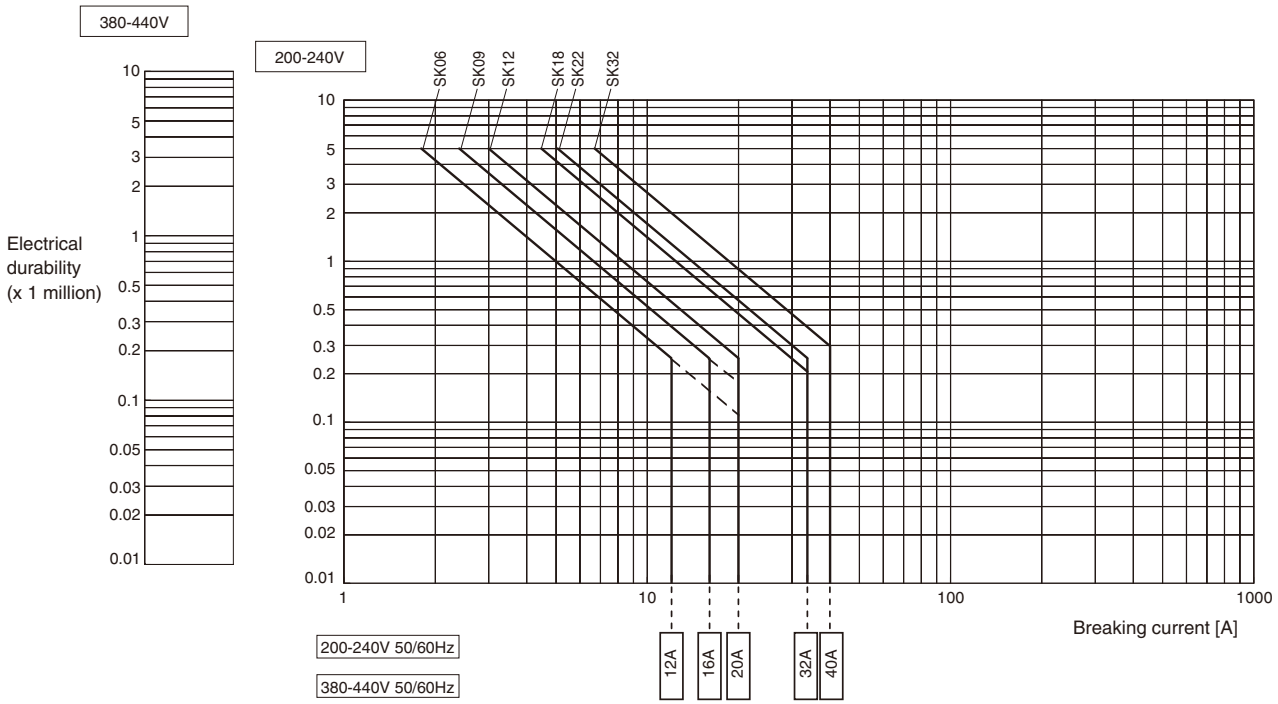

Magnetic-Contactors
SK Series Protective Coordination

■ Coordination with Short-circuit Protection Devices (SCPD) (Based on IEC Standards)

● Prospective Short-circuit Current "r" (240V and 440V)

Magnetic Contactor	Thermal Overload Relay		Coordination type						
			Type 1			Type 2			
Type	Type	Ampere setting range [A]	Short-circuit current "r" [kA]	Molded Case Circuit Breaker / Earth Leakage Circuit Breaker		Short-circuit current "r" [kA]	Fuse (IEC 60269-1 gG and gM) rating (A)	FUJI Low-voltage Current-limiting Fuse	
				Type	Rating [A]			Type	Rating [A]
SK06	**TK12**	0.34-0.52	1	BW32SAG EW32SAG BW32SBG EW32SBG	3	1	2	BLA003	3
		0.48-0.72	1		3	1	4	BLA005	5
		0.64-0.96	1		5	1	4	BLA005	5
		0.8-1.2	1		5	1	4	BLA005	5
		0.95-1.45	1		10	1	16	BLA020	20
		1.1-1.65	1		10	1	16	BLA020	20
		1.4-2.1	1		20	1	16	BLA020	20
		1.7-2.6	1		20	1	16	BLA020	20
		2.2-3.4	1		20	1	16	BLA020	20
		2.8-4.2	1		20	1	16	BLA020	20
		4-6	1		20	1	16	BLA020	20
SK09	**TK12**	0.34-0.52	1	BW32SAG EW32SAG BW32SBG EW32SBG	3	1	2	BLA003	3
		0.48-0.72	1		3	1	4	BLA005	5
		0.64-0.96	1		5	1	4	BLA005	5
		0.8-1.2	1		5	1	4	BLA005	5
		0.95-1.45	1		10	1	16	BLA020	20
		1.1-1.65	1		10	1	16	BLA020	20
		1.4-2.1	1		20	1	16	BLA020	20
		1.7-2.6	1		20	1	16	BLA020	20
		2.2-3.4	1		20	1	16	BLA020	20
		2.8-4.2	1		20	1	16	BLA020	20
		4-6	1		20	1	16	BLA020	20
		5-7.5	1		20	1	16	BLA020	20
		6-9	1		20	1	16	BLA020	20
SK12	**TK12**	0.34-0.52	1	BW32SAG EW32SAG BW32SBG EW32SBG	3	1	2	BLA003	3
		0.48-0.72	1		3	1	4	BLA005	5
		0.64-0.96	1		5	1	4	BLA005	5
		0.8-1.2	1		5	1	4	BLA005	5
		0.95-1.45	1		10	1	16	BLA020	20
		1.1-1.65	1		10	1	16	BLA020	20
		1.4-2.1	1		20	1	16	BLA020	20
		1.7-2.6	1		20	1	16	BLA020	20
		2.2-3.4	1		20	1	16	BLA020	20
		2.8-4.2	1		20	1	16	BLA020	20
		4-6	1		20	1	16	BLA020	20
		5-7.5	1		20	1	16	BLA020	20
		6-9	1		20	1	16	BLA020	20
		7-10.5	1		20	1	16	BLA020	20
		9-13	1		30	1	16	BLA020	20
SK06	–		1	BW32SAG EW32SAG BW32SBG EW32SBG	30	1	16	BLA020	20
SK09	–		1			1	16	BLA020	20
SK12	–		1			1	16	BLA020	20

● Prospective Short-circuit Current "r" (240V and 440V)

Magnetic Contactor	Thermal Overload Relay		Coordination type						
			Type 1			Type 2			
Type	Type	Ampere setting range [A]	Short-circuit current "r" [kA]	Molded Case Circuit Breaker / Earth Leakage Circuit Breaker		Short-circuit current "r" [kA]	Fuse (IEC 60269-1 gG and gM) rating (A)	FUJI Low-voltage Current-limiting Fuse	
				Type	Rating [A]			Type	Rating [A]
SK18	**TK25**	0.34-0.52	3	BW50SAG EW50SAG BW50SBG EW50SBG	3	3	2	BLA003	3
		0.48-0.72	3		3	3	4	BLA005	5
		0.64-0.96	3		5	3	4	BLA005	5
		0.8-1.2	3		5	3	16	BLA020	20
		0.95-1.45	3		10	3	20	BLA030	30
		1.1-1.65	3		10	3	20	BLA030	30
		1.4-2.1	3		20	3	20	BLA030	30
		1.7-2.6	3		20	3	20	BLA030	30
		2.2-3.4	3		20	3	20	BLA030	30
		2.8-4.2	3		20	3	20	BLA030	30
		4-6	3		20	3	20	BLA030	30
		5-7.5	3		20	3	20	BLA030	30
		6-9	3		20	3	20	BLA030	30
		7-10.5	3		20	3	25	BLA040	40
		9-13	3		30	3	25	BLA040	40
		12-18	3		30	3	40	BLA060	60
SK22	**TK25**	0.34-0.52	3	BW50SAG EW50SAG BW50SBG EW50SBG	3	3	2	BLA003	3
		0.48-0.72	3		3	3	4	BLA005	5
		0.64-0.96	3		5	3	4	BLA005	5
		0.8-1.2	3		5	3	16	BLA020	20
		0.95-1.45	3		10	3	20	BLA030	30
		1.1-1.65	3		10	3	20	BLA030	30
		1.4-2.1	3		20	3	20	BLA030	30
		1.7-2.6	3		20	3	20	BLA030	30
		2.2-3.4	3		20	3	20	BLA030	30
		2.8-4.2	3		20	3	20	BLA030	30
		4-6	3		20	3	20	BLA030	30
		5-7.5	3		20	3	20	BLA030	30
		6-9	3		20	3	20	BLA030	30
		7-10.5	3		20	3	25	BLA040	40
		9-13	3		30	3	25	BLA040	40
		12-18	3		30	3	40	BLA060	60
		16-22	3		50	3	50	BLA075	75
SK32	**TK26**	0.34-0.52	3	BW50SAG EW50SAG BW50SBG EW50SBG	3	3	2	BLA003	3
		0.48-0.72	3		3	3	4	BLA005	5
		0.64-0.96	3		5	3	4	BLA005	5
		0.8-1.2	3		5	3	16	BLA020	20
		0.95-1.45	3		10	3	20	BLA030	30
		1.1-1.65	3		10	3	20	BLA030	30
		1.4-2.1	3		20	3	20	BLA030	30
		1.7-2.6	3		20	3	20	BLA030	30
		2.2-3.4	3		20	3	20	BLA030	30
		2.8-4.2	3		20	3	20	BLA030	30
		4-6	3		20	3	20	BLA030	30
		5-7.5	3		20	3	20	BLA030	30
		6-9	3		20	3	20	BLA030	30
		7-10.5	3		20	3	25	BLA040	40
		9-13	3		30	3	25	BLA040	40
		12-18	3		30	3	40	BLA060	60
		16-22	3		50	3	50	BLA075	75
		20-26	3		50	3	50	BLA075	75
		26-32	3	BW63SAG EW63SAG BW63SBG EW63SBG	63	3	50	BLA075	75
SK18	–	–	3	BW50SAG EW50SAG BW50SBG EW50SBG	50	3	50	BLA075	75
SK22	–	–	3			3	50	BLA075	75
SK32	–	–	3	BW63SAG EW63SAG BW63SBG EW63SBG	63	3	50	BLA075	75

Magnetic-Contactors
SK Series Protective Coordination

● Rated conditional short-circuit current Iq (240V)

Magnetic Contactor	Thermal Overload Relay		Coordination type						
			Type 1			Type 2			
Type	Type	Ampere setting range [A]	Short-circuit current "Iq" [kA]	Molded Case Circuit Breaker / Earth Leakage Circuit Breaker		Short-circuit current "Iq" [kA]	Fuse (IEC 60269-1 gG and gM) rating (A)	FUJI Low-voltage Current-limiting Fuse	
				Type	Rating [A]			Type	Rating [A]
SK06	**TK12**	0.34-0.52	25	BW50RAG EW50RAG	3	50	2	BLA003	3
		0.48-0.72	25		3	50	4	BLA005	5
		0.64-0.96	25		5	50	4	BLA005	5
		0.8-1.2	25		5	50	4	BLA005	5
		0.95-1.45	25		10	50	16	BLA020	20
		1.1-1.65	25		10	50	16	BLA020	20
		1.4-2.1	25		10	50	20	BLA030	30
		1.7-2.6	25		10	50	20	BLA030	30
		2.2-3.4	25		10	50	20	BLA030	30
		2.8-4.2	25		10	50	20	BLA030	30
		4-6	25		10	50	20	BLA030	30
SK09	**TK12**	0.34-0.52	25	BW50RAG EW50RAG	3	50	2	BLA003	3
		0.48-0.72	25		3	50	4	BLA005	5
		0.64-0.96	25		5	50	4	BLA005	5
		0.8-1.2	25		5	50	4	BLA005	5
		0.95-1.45	25		10	50	16	BLA020	20
		1.1-1.65	25		10	50	16	BLA020	20
		1.4-2.1	25		10	50	20	BLA030	30
		1.7-2.6	25		10	50	20	BLA030	30
		2.2-3.4	25		10	50	20	BLA030	30
		2.8-4.2	25		10	50	20	BLA030	30
		4-6	25		10	50	20	BLA030	30
		5-7.5	25		30	50	20	BLA030	30
		6-9	25		30	50	20	BLA030	30
SK12	**TK12**	0.34-0.52	25	BW50RAG EW50RAG	3	50	2	BLA003	3
		0.48-0.72	25		3	50	4	BLA005	5
		0.64-0.96	25		5	50	4	BLA005	5
		0.8-1.2	25		5	50	4	BLA005	5
		0.95-1.45	25		10	50	16	BLA020	20
		1.1-1.65	25		10	50	16	BLA020	20
		1.4-2.1	25		10	50	20	BLA030	30
		1.7-2.6	25		10	50	20	BLA030	30
		2.2-3.4	25		10	50	20	BLA030	30
		2.8-4.2	25		10	50	20	BLA030	30
		4-6	25		10	50	20	BLA030	30
		5-7.5	25		30	50	20	BLA030	30
		6-9	25		30	50	20	BLA030	30
		7-10.5	25		30	50	20	BLA030	30
		9-13	25		30	50	20	BLA030	30
SK06	–	–	25	BW50RAG EW50RAG	30	50	20	BLA030	30
SK09	–	–	25			50	20	BLA030	30
SK12	–	–	25			50	20	BLA030	30

● Rated conditional short-circuit current Iq (240V)

Magnetic Contactor	Thermal Overload Relay		Coordination type						
			Type 1			Type 2			
Type	Type	Ampere setting range [A]	Short-circuit current "Iq" [kA]	Molded Case Circuit Breaker / Earth Leakage Circuit Breaker		Short-circuit current "Iq" [kA]	Fuse (IEC 60269-1 gG and gM) rating (A)	FUJI Low-voltage Current-limiting Fuse	
				Type	Rating [A]			Type	Rating [A]
SK18	**TK25**	0.34-0.52	10	BW50RAG EW50RAG	3	50	2	BLA003	3
		0.48-0.72	10		3	50	4	BLA005	5
		0.64-0.96	10		5	50	4	BLA005	5
		0.8-1.2	10		5	50	4	BLA005	5
		0.95-1.45	10		10	50	16	BLA020	20
		1.1-1.65	10		10	50	16	BLA020	20
		1.4-2.1	10		10	50	20	BLA030	30
		1.7-2.6	10		10	50	20	BLA030	30
		2.2-3.4	10		10	50	20	BLA030	30
		2.8-4.2	10		10	50	20	BLA030	30
		4-6	10		10	50	20	BLA030	30
		5-7.5	10		30	50	20	BLA030	30
		6-9	10		30	50	20	BLA030	30
		7-10.5	10		30	50	20	BLA030	30
		9-13	10		30	50	25	BLA040	40
		12-18	10		30	50	25	BLA040	40
SK22	**TK25**	0.34-0.52	10		3	50	2	BLA003	3
		0.48-0.72	10		3	50	4	BLA005	5
		0.64-0.96	10		5	50	4	BLA005	5
		0.8-1.2	10		5	50	4	BLA005	5
		0.95-1.45	10		10	50	16	BLA020	20
		1.1-1.65	10		10	50	16	BLA020	20
		1.4-2.1	10		10	50	20	BLA030	30
		1.7-2.6	10		10	50	20	BLA030	30
		2.2-3.4	10		10	50	20	BLA030	30
		2.8-4.2	10		10	50	20	BLA030	30
		4-6	10		10	50	20	BLA030	30
		5-7.5	10		30	50	20	BLA030	30
		6-9	10		30	50	20	BLA030	30
		7-10.5	10		30	50	20	BLA030	30
		9-13	10		30	50	25	BLA040	40
		12-18	10		30	50	25	BLA040	40
		16-22	10		50	50	25	BLA040	40
SK32	**TK26**	0.34-0.52	10		3	50	2	BLA003	3
		0.48-0.72	10		3	50	4	BLA005	5
		0.64-0.96	10		5	50	4	BLA005	5
		0.8-1.2	10		5	50	4	BLA005	5
		0.95-1.45	10		10	50	16	BLA020	20
		1.1-1.65	10		10	50	16	BLA020	20
		1.4-2.1	10		10	50	20	BLA030	30
		1.7-2.6	10		10	50	20	BLA030	30
		2.2-3.4	10		10	50	20	BLA030	30
		2.8-4.2	10		10	50	20	BLA030	30
		4-6	10		10	50	20	BLA030	30
		5-7.5	10		30	50	20	BLA030	30
		6-9	10		30	50	20	BLA030	30
		7-10.5	10		30	50	20	BLA030	30
		9-13	10		30	50	25	BLA040	40
		12-18	10		30	50	25	BLA040	40
		16-22	10		50	50	40	BLA060	60
		20-26	10		50	50	50	BLA060	60
		26-32	10	BW63RAG EW63RAG	63	50	50	BLA060	60
SK18	**–**	–	10	BW50RAG EW50RAG	50	50	25	BLA040	40
SK22	**–**	–	10			50	25	BLA040	40
SK32	**–**	–	10	BW63RAG EW63RAG	63	50	50	BLA075	75

Magnetic-Contactors
SK Series Protective Coordination

■ UL approved Short-circuit Current Ratings (SCCR)

● Combination of Breaker and Fuse (UL60947-4-1 Type C)

Magnetic Starter			Short-circuit Current Ratings (SCCR)								
Magnetic Contactor	Thermal Overload Relay		240V AC			240V AC			600V AC		
Type	Type	Ampere setting range [A]	SCCR [kA]	Circuit breaker		SCCR [kA]	Circuit breaker		SCCR [kA]	Circuit breaker	Current-limiting fuse
				Max. rated current [A]	UL489-certified Molded Case Circuit Breaker / Earth Leakage Circuit Breaker		Max. rated current [A]	UL489-certified Molded Case Circuit Breaker / Earth Leakage Circuit Breaker		Max. rated current [A]	Max. rated current [A]
SK06	**TK12**	0.1-0.15	18	15	BW50RBGU EW50RBGU	25	15	BW125JAGU BW125RAGU EW125JAGU EW125RAGU	5	–	30
		0.13-0.2	18	15		25	15		5	–	30
		0.18-0.27	18	15		25	15		5	–	30
		0.24-0.36	18	15		25	15		5	–	30
		0.34-0.52	18	15		25	15		5	–	30
		0.48-0.72	18	15		25	15		5	–	30
		0.64-0.96	18	15		25	15		5	–	30
		0.8-1.2	18	15		25	15		5	–	30
		0.95-1.45	18	20		25	15		5	–	30
		1.1-1.65	18	20		25	15		5	–	30
		1.4-2.1	18	20		25	20		5	–	30
		1.7-2.6	18	20		25	20		5	–	30
		2.2-3.4	18	20		25	20		5	–	30
		2.8-4.2	18	20		25	20		5	–	30
		4-6	18	20		25	20		5	–	30
SK09	**TK12**	0.1-0.15	18	15	BW50RBGU EW50RBGU	25	15	BW125JAGU BW125RAGU EW125JAGU EW125RAGU	5	–	30
		0.13-0.2	18	15		25	15		5	–	30
		0.18-0.27	18	15		25	15		5	–	30
		0.24-0.36	18	15		25	15		5	–	30
		0.34-0.52	18	15		25	15		5	–	30
		0.48-0.72	18	15		25	15		5	–	30
		0.64-0.96	18	15		25	15		5	–	30
		0.8-1.2	18	15		25	15		5	–	30
		0.95-1.45	18	20		25	15		5	–	30
		1.1-1.65	18	20		25	15		5	–	30
		1.4-2.1	18	20		25	20		5	–	30
		1.7-2.6	18	20		25	20		5	–	30
		2.2-3.4	18	20		25	20		5	–	30
		2.8-4.2	18	20		25	20		5	–	30
		4-6	18	20		25	20		5	–	30
		5-7.5	18	20		25	20		5	–	30
		6-9	18	20		25	20		5	–	30
SK12	**TK12**	0.1-0.15	18	15	BW50RBGU EW50RBGU	25	15	BW125JAGU BW125RAGU EW125JAGU EW125RAGU	5	–	30
		0.13-0.2	18	15		25	15		5	–	30
		0.18-0.27	18	15		25	15		5	–	30
		0.24-0.36	18	15		25	15		5	–	30
		0.34-0.52	18	15		25	15		5	–	30
		0.48-0.72	18	15		25	15		5	–	30
		0.64-0.96	18	15		25	15		5	–	30
		0.8-1.2	18	15		25	15		5	–	30
		0.95-1.45	18	20		25	15		5	–	30
		1.1-1.65	18	20		25	15		5	–	30
		1.4-2.1	18	20		25	20		5	–	30
		1.7-2.6	18	20		25	20		5	–	30
		2.2-3.4	18	20		25	20		5	–	30
		2.8-4.2	18	20		25	20		5	–	30
		4-6	18	20		25	20		5	–	30
		5-7.5	18	20		25	20		5	–	30
		6-9	18	20		25	20		5	–	30
		7-10.5	18	20		25	20		5	–	30
		9-13	18	30		25	30		5	–	30
SK06	**–**	–	18	30	BW50RBGU EW50RBGU	25	30	BW125JAGU BW125RAGU EW125JAGU EW125RAGU	5	–	30
SK09	**–**	–	18	30		25	30		5	–	30
SK12	**–**	–	18	30		25	30		5	–	30

● Combination of Breaker and Fuse (UL60947-4-1 Type C) (Continued)

Magnetic Starter			Short-circuit Current Ratings (SCCR)								
Magnetic Contactor	Thermal Overload Relay		240V AC			480V AC			600V AC		
Type	Type	Ampere setting range [A]	SCCR [kA]	Circuit breaker		SCCR [kA]	Circuit breaker		SCCR [kA]	Circuit breaker	Current-limiting fuse
				Max. rated current [A]	UL489-certified Molded Case Circuit Breaker / Earth Leakage Circuit Breaker		Max. rated current [A]	UL489-certified Molded Case Circuit Breaker / Earth Leakage Circuit Breaker		Max. rated current [A]	Max. rated current [A]
SK18	**TK25**	0.1-0.15	35	15	BW125JAGU EW125JAGU	35	15	BW125RAGU EW125RAGU	5	–	30
		0.13-0.2	35	15		35	15		5	–	30
		0.18-0.27	35	15		35	15		5	–	30
		0.24-0.36	35	15		35	15		5	–	30
		0.34-0.52	35	15		35	15		5	–	30
		0.48-0.72	35	15		35	15		5	–	30
		0.64-0.96	35	15		35	15		5	–	30
		0.8-1.2	35	15		35	15		5	–	30
		0.95-1.45	35	15		35	15		5	–	30
		1.1-1.65	35	15		35	15		5	–	30
		1.4-2.1	35	20		35	20		5	–	30
		1.7-2.6	35	20		35	20		5	–	30
		2.2-3.4	35	20		35	20		5	–	30
		2.8-4.2	35	20		35	20		5	–	30
		4-6	35	20		35	20		5	–	30
		5-7.5	35	20		35	20		5	–	30
		6-9	35	20		35	20		5	–	30
		7-10.5	35	20		35	20		5	–	30
		9-13	35	30		35	30		5	–	30
		12-18	35	30		35	30		5	–	50
			25	40		10	40				
SK22	**TK25**	0.1-0.15	35	15	BW125JAGU EW125JAGU	35	15	BW125RAGU EW125RAGU	5	–	30
		0.13-0.2	35	15		35	15		5	–	30
		0.18-0.27	35	15		35	15		5	–	30
		0.24-0.36	35	15		35	15		5	–	30
		0.34-0.52	35	15		35	15		5	–	30
		0.48-0.72	35	15		35	15		5	–	30
		0.64-0.96	35	15		35	15		5	–	30
		0.8-1.2	35	15		35	15		5	–	30
		0.95-1.45	35	15		35	15		5	–	30
		1.1-1.65	35	15		35	15		5	–	30
		1.4-2.1	35	20		35	20		5	–	30
		1.7-2.6	35	20		35	20		5	–	30
		2.2-3.4	35	20		35	20		5	–	30
		2.8-4.2	35	20		35	20		5	–	30
		4-6	35	20		35	20		5	–	30
		5-7.5	35	20		35	20		5	–	30
		6-9	35	20		35	20		5	–	30
		7-10.5	35	20		35	20		5	–	30
		9-13	35	30		35	30		5	–	30
		12-18	35	30		35	30		5	–	50
			25	40		10	40	BW125JAGU EW125JAGU			
		16-22	35	30		35	30	BW125RAGU EW125RAGU	5	–	50
			25	50		10	50	BW125JAGU EW125JAGU			

Magnetic-Contactors
SK Series Protective Coordination

● Combination of Breaker and Fuse (UL60947-4-1 Type C) (Continued)

Magnetic Starter			Short-circuit Current Ratings (SCCR)								
Magnetic Contactor	Thermal Overload Relay		240V AC			480V AC			600V AC		
Type	Type	Ampere setting range [A]	SCCR [kA]	Circuit breaker		SCCR [kA]	Circuit breaker		SCCR [kA]	Circuit breaker	Current-limiting fuse
				Max. rated current [A]	UL489-certified Molded Case Circuit Breaker / Earth Leakage Circuit Breaker		Max. rated current [A]	UL489-certified Molded Case Circuit Breaker / Earth Leakage Circuit Breaker		Max. rated current [A]	Max. rated current [A]
SK32	**TK26**	0.1-0.15	35	15	BW125JAGU EW125JAGU	35	15	BW125RAGU EW125RAGU	5	–	30
		0.13-0.2	35	15		35	15		5	–	30
		0.18-0.27	35	15		35	15		5	–	30
		0.24-0.36	35	15		35	15		5	–	30
		0.34-0.52	35	15		35	15		5	–	30
		0.48-0.72	35	15		35	15		5	–	30
		0.64-0.96	35	15		35	15		5	–	30
		0.8-1.2	35	15		35	15		5	–	30
		0.95-1.45	35	15		35	15		5	–	30
		1.1-1.65	35	15		35	15		5	–	30
		1.4-2.1	35	20		35	20		5	–	30
		1.7-2.6	35	20		35	20		5	–	30
		2.2-3.4	35	20		35	20		5	–	30
		2.8-4.2	35	20		35	20		5	–	30
		4-6	35	20		35	20		5	–	30
		5-7.5	35	20		35	20		5	–	30
		6-9	35	20		35	20		5	–	30
		7-10.5	35	20		35	20		5	–	30
		9-13	35	30		35	30		5	–	30
		12-18	35	30		35	30		5	–	50
			25	40		10	40				
		16-22	35	30		35	30		5	–	50
			25	50		10	50				
		20-26	35	30		35	30		5	–	50
			25	50		10	50	BW125JAGU EW125JAGU			
		26-32	35	30		35	30	BW125RAGU EW125RAGU	5	–	50
			25	50		10	60	BW125JAGU EW125JAGU			
SK18	**–**	–	35	30	BW125JAGU EW125JAGU	35	30	BW125RAGU EW125RAGU	5	50	50
			25	50		10	50	BW125JAGU EW125JAGU			
SK22	**–**	–	35	30		35	30	BW125RAGU EW125RAGU	5	50	50
			25	50		10	50	BW125JAGU EW125JAGU			
SK32	**–**	–	35	30	BW125JAGU EW125JAGU	35	30	BW125RAGU EW125RAGU	5	70	70
		–	25	60		10	60	BW125JAGU EW125JAGU			

● Combinations with Manual Motor Starter (UL60947-4-1 Type F)

Magnetic Contactor type	AC480Y/277V		
	Combined MMS		Short-circuit Current Rating (SCCR) [kA]
	Type	Ampere setting range [A]	
SK06	BM3RS□-P40	0.25-0.4	65
	BM3RS□-P63	0.4-0.63	65
	BM3RS□-001	0.63-1	65
	BM3RS□-1P6	1-1.6	65
	BM3RS□-2P5	1.6-2.5	50
	BM3RS□-004	2.5-4	50
	BM3RS□-6P3	4-6.3	50
	BM3RH□-P40	0.25-0.4	65
	BM3RH□-P63	0.4-0.63	65
	BM3RH□-001	0.63-1	65
	BM3RH□-1P6	1-1.6	65
	BM3RH□-2P5	1.6-2.5	65
	BM3RH□-004	2.5-4	65
	BM3RH□-6P3	4-6.3	65
SK09	BM3RS□-P40	0.25-0.4	65
	BM3RS□-P63	0.4-0.63	65
	BM3RS□-001	0.63-1	65
	BM3RS□-1P6	1-1.6	65
	BM3RS□-2P5	1.6-2.5	50
	BM3RS□-004	2.5-4	50
	BM3RS□-6P3	4-6.3	50
	BM3RS□-010	6.3-10	25
	BM3RH□-P40	0.25-0.4	65
	BM3RH□-P63	0.4-0.63	65
	BM3RH□-001	0.63-1	65
	BM3RH□-1P6	1-1.6	65
	BM3RH□-2P5	1.6-2.5	65
	BM3RH□-004	2.5-4	65
	BM3RH□-6P3	4-6.3	65
	BM3RH□-010	6.3-10	25
SK12	BM3RS□-P40	0.25-0.4	65
	BM3RS□-P63	0.4-0.63	65
	BM3RS□-001	0.63-1	65
	BM3RS□-1P6	1-1.6	65
	BM3RS□-2P5	1.6-2.5	50
	BM3RS□-004	2.5-4	50
	BM3RS□-6P3	4-6.3	50
	BM3RS□-010	6.3-10	25
	BM3RS□-013	9-13	25
	BM3RH□-P40	0.25-0.4	65
	BM3RH□-P63	0.4-0.63	65
	BM3RH□-001	0.63-1	65
	BM3RH□-1P6	1-1.6	65
	BM3RH□-2P5	1.6-2.5	65
	BM3RH□-004	2.5-4	65
	BM3RH□-6P3	4-6.3	65
	BM3RH□-010	6.3-10	25
	BM3RH□-013	9-13	10

Note 1: When you use it as Type F, you need to use both a short-circuit alarm contact block BZOTKUAB and a load-side terminal cover BZOTCRE (in case of round crimped terminal type, use BZORTCRE instead).

Magnetic-Contactors
SK Series Protective Coordination

Magnetic Contactor type	AC480Y/277V		
	Combined MMS		Short-circuit Current Rating (SCCR) [kA]
	Type	Ampere setting range [A]	
SK18	BM3RS□-P40	0.25-0.4	65
	BM3RS□-P63	0.4-0.63	65
	BM3RS□-001	0.63-1	65
	BM3RS□-1P6	1-1.6	65
	BM3RS□-2P5	1.6-2.5	65
	BM3RS□-004	2.5-4	65
	BM3RS□-6P3	4-6.3	65
	BM3RS□-010	6.3-10	25
	BM3RS□-013	9-13	25
	BM3RS□-016	11-16	25
	BM3RS□-020	14-20	25
	BM3RH□-P40	0.25-0.4	65
	BM3RH□-P63	0.4-0.63	65
	BM3RH□-001	0.63-1	65
	BM3RH□-1P6	1-1.6	65
	BM3RH□-2P5	1.6-2.5	65
	BM3RH□-004	2.5-4	65
	BM3RH□-6P3	4-6.3	65
	BM3RH□-010	6.3-10	65
	BM3RH□-013	9-13	65
	BM3RH□-016	11-16	65
	BM3RH□-020	14-20	65
SK22	BM3RS□-P40	0.25-0.4	65
	BM3RS□-P63	0.4-0.63	65
	BM3RS□-001	0.63-1	65
	BM3RS□-1P6	1-1.6	65
	BM3RS□-2P5	1.6-2.5	65
	BM3RS□-004	2.5-4	65
	BM3RS□-6P3	4-6.3	65
	BM3RS□-010	6.3-10	25
	BM3RS□-013	9-13	25
	BM3RS□-016	11-16	25
	BM3RS□-020	14-20	25
	BM3RS□-025	19-25	25
	BM3RH□-P40	0.25-0.4	65
	BM3RH□-P63	0.4-0.63	65
	BM3RH□-001	0.63-1	65
	BM3RH□-1P6	1-1.6	65
	BM3RH□-2P5	1.6-2.5	65
	BM3RH□-004	2.5-4	65
	BM3RH□-6P3	4-6.3	65
	BM3RH□-010	6.3-10	65
	BM3RH□-013	9-13	65
	BM3RH□-016	11-16	65
	BM3RH□-020	14-20	65
	BM3RH□-025	19-25	50

Magnetic Contactor type	AC480Y/277V		
	Combined MMS		Short-circuit Current Rating (SCCR) [kA]
	Type	Ampere setting range [A]	
SK32	BM3RS□-P40	0.25-0.4	65
	BM3RS□-P63	0.4-0.63	65
	BM3RS□-001	0.63-1	65
	BM3RS□-1P6	1-1.6	65
	BM3RS□-2P5	1.6-2.5	65
	BM3RS□-004	2.5-4	65
	BM3RS□-6P3	4-6.3	65
	BM3RS□-010	6.3-10	25
	BM3RS□-013	9-13	25
	BM3RS□-016	11-16	25
	BM3RS□-020	14-20	25
	BM3RS□-025	19-25	25
	BM3RS□-032	24-32	25
	BM3RH□-P40	0.25-0.4	65
	BM3RH□-P63	0.4-0.63	65
	BM3RH□-001	0.63-1	65
	BM3RH□-1P6	1-1.6	65
	BM3RH□-2P5	1.6-2.5	65
	BM3RH□-004	2.5-4	65
	BM3RH□-6P3	4-6.3	65
	BM3RH□-010	6.3-10	65
	BM3RH□-013	9-13	65
	BM3RH□-016	11-16	65
	BM3RH□-020	14-20	65
	BM3RH□-025	19-25	50
	BM3RH□-032	24-32	50

■ Applications for IE3 (premium efficiency) motors

IE3 (premium efficiency) motors have a 15 to 30% larger starting current compared with conventional motors.
(There are cases they may require a longer starting time.)

● Selecting magnetic contactors
If the starting current is increased, the make/break durability of magnetic contactors is affected.
The life expectancy of magnetic contactors used in motors (AC-3 rating) is based on a starting current that is six times the rated current. If a starting current becomes larger than this (especially if it exceeds ten times the rated value), the make/break durability could be significantly reduced, or contact welding could occur. For this reason, be sure to confirm the motor's starting current and the rating of the magnetic contactor.

[What to do for a large starting current]
Choose a product while making sure that the starting current does not exceed 10 times that of the rating (AC-3) of the magnetic contactor.
There are cases where the motor's rated current could increase. In this case, choose a product while making sure it is within the range of the magnetic contactor's AC-3 rating.

● Selecting thermal relays
A larger starting current could cause it to enter the operating range of the thermal overload relay, resulting in unnecessary operation (area b in the diagram).
Therefore, be sure to confirm this matter for IE3 motor applications.
[What to do for a large starting current]
Measure 1: Raise the pick-up current value for the dial reading of the thermal overload relay to around within 5%.
Measure 2: Use a time delay thermal overload relay (class 20 or class 30).

Note 1: For Measures 1 and 2, confirm compatibility with the thermal characteristics of the electric motor.
Note 2: If the motor's rated current also increases, configure the thermal overload relay setting in accordance with the motor's rated current.

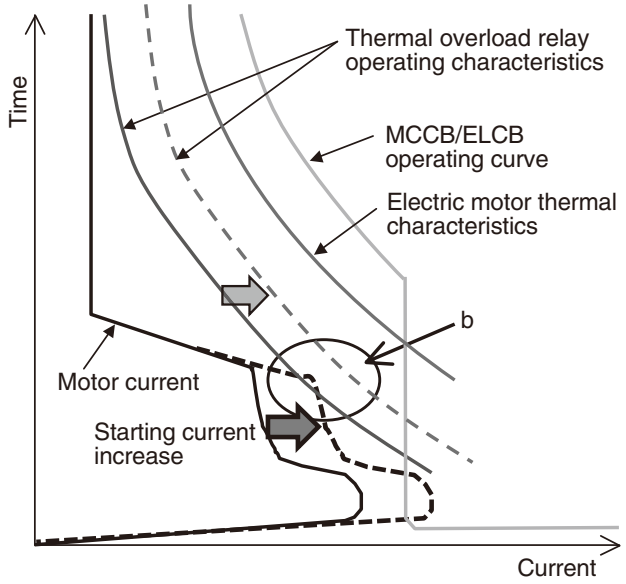

■ Normal Operating Conditions and Correct Mounting

● Standard Operating Conditions

Ambient temperature *1	–10 to 55°C with no sudden temperature changes resulting in condensation or icing (The average temperature over a 24-hour period must not exceed 35°C.)
Ambient humidity	45% to 85% RH (with no condensation)
Altitude	2,000 m max.
Atmosphere	No excessive dust, smoke, corrosive gasses, inflammable gases, steam, or salts
Storage temperature	–40 to 60°C
Vibration resistance	10 to 55Hz, 15m/s²
Shock resistance	50m/s²
Mounting	Screw mounting 35mm-wide top hat rail (Refer to the rail mounting in the next item.)

Mounting angle

Appearance

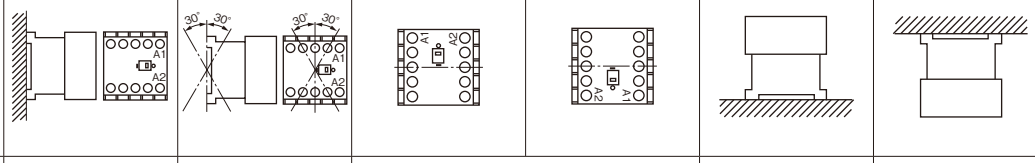

Mounting direction	Standard mounting	Angled mounting	Side mounting		Horizontal mounting	Ceiling mounting
	–	30°	Upper coil side	Lower coil side	Upper terminal side	Lower terminal side
SK06, 09, 12A□ SKH4A□	○	○	○	*3	○	○
SK18, 22, 32A□	○	○	*5 Right and left sides available		× *6	×
SK06, 09, 12G□ SKH4G□	○	○	*4	○	○	○
SK18, 22, 32G□	○	○	*5 Right and left sides available		× *6	×
SK06, 09, 12L□ SKH4L□	○	○	*4	○	○	○
SK06, 09, 12A□W	○	○	*7	*3, *7	*7	*7
SK18, 22, 32A□W	○	○	*5, *7 Right and left sides available		× *6, *7	×
SK06, 09, 12G□W	○	○	*4, *7	*7	*7	*7
SK18, 22, 32G□W	○	○	*5, *7 Right and left sides available		× *6, *7	×
SK06, 09, 12L□W	○	○	*4, *7	*7	*7	*7

Mounting gaps *2

Provide the mounting gaps and arc space that are given in the following table when you mount the product.

Type	A [mm]	B [mm]	C [mm]
SK06, 09, 12	0	10	2
SK18, 22, 32	0	10	0

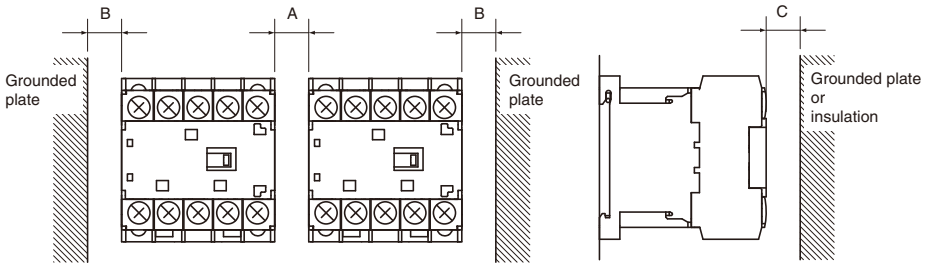

Note *1: The ambient temperature is the temperature near the product during operation.
Note *2: If Magnetic Starters are used in combination with Thermal Overload Relays and the products are used with continuous through current without providing gaps, temperature increases will reduce the life of the coil.Also, the characteristics of the Thermal Overload Relays will vary somewhat from the mutual thermal effects between the heaters.When using the products under these conditions, separate the products from each other by at least 5 mm (dimension A).
Note *3: The allowable power fluctuation range is 0.9 Us to 1.1 Us.
Note *4: The drop-out voltage is 0.05 Us to 0.7 Us.
Note *5: The mechanical durability and operating cycles per hour are reduced to 80% of those of standard installations.
Note *6: The standard type cannot be used in horizontal installations. Use the "Z109 type" instead, which was designed specifically for horizontal installations. The mechanical durability, electrical durability, and operating cycles per hour are reduced to 80% of those of standard types.
Note *7: The operational limiting current of the thermal overload relay will vary slightly.
(Note) Use screw mounting for mounting to ceilings.

Magnetic-Contactors
SK Series Normal Operating Conditions and Mounting

● **Rail Mounting**

The SK06 to SK12 Magnetic Motors and Starters can be mounted to 35mm-wide support rails. Secure the rail with the mounting pitch that is shown in the figure at the right.
Example of Applicable Rail: TH35-15AL

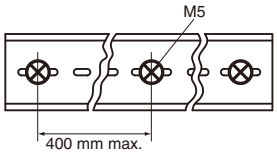

• Mounting Rail

Type	TH35-15AL
Material	Aluminum
External dimensions	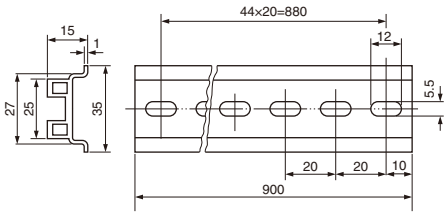

Follow the procedures below to mount or remove the product on the rail.

For SK06 thorough SK12 models

[Mounting]
① Tilt the product at about 10° from mounting surface to the rail, hang the hook at the power supply side on the rail, and softly push the product down.
② Press the product to the rail.
③ Raise the product and hang the hook at the load side on the rail.
④ Shake the product a little to confirm that the hook at the load side is hung on the rail.

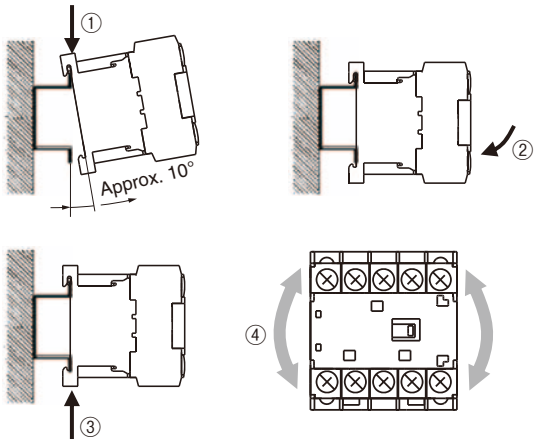

[Removing]
① Hold the product at the top and bottom, press it downward to remove the hook at the bottom of the product.
② Remove the product.

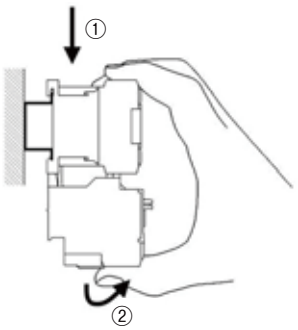

For SK18, SK22, and SK32 models

[Mounting]
① Catch the hook on the power supply side of the product to the rail.
② Press the product to the rail.

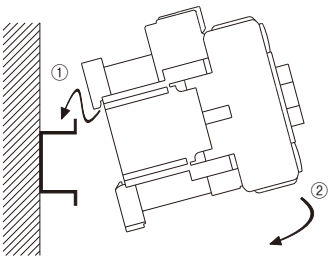

[Removing]
① Use a screwdriver or other tool to move the slider downward.
② Remove the product.

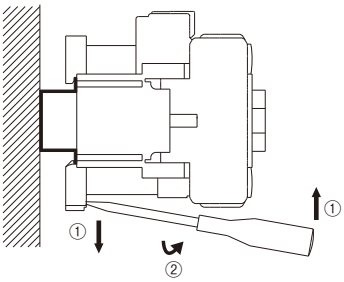

● Voltage Fluctuation Range in Control Circuits and Voltage Drop

• SK06A to SK32A (AC Operation)
Drop-out voltage (operating voltage): 85% to 110% of rated voltage
However, there is an official rated inrush voltage, but usage is possible without contact welding even if the voltage drops to 75% of the rating when the main contacts close.

• SK06G to SK32G, SK06L to SK12L (DC Operation)
Drop-out voltage (operating voltage): 85% to 110% of rated voltage at ambient temperature of 55°C and 80% to 110% of rated voltage at ambient temperature of 40°C.
However, there is an official rated inrush voltage, but usage is possible without contact welding even if the voltage drops to 75% of the rating when the main contacts close.

■ Wiring

● Wiring and Terminal Processing
Make all connections correctly according to the connection diagram. For the SK06 to SK32, you can use solid wires, stranded wires, or crimped terminals for the main terminals, auxiliary terminals, and coil terminals.

● Tightening Torque
If the Magnetic Contactor or Switch is not mounted completely, the shock when the Contactor or Switches is turned ON may cause the contacts to jump or may reduce the durability. Also, if wires are not tightened sufficiently, they may become hot or loose, resulting in a fire, short-circuit, electric shock or some other potentially dangerous situation. Be sure to tighten the wires to the torque that is specified in the following table.

● Terminals, Wire Sizes, and Tightening Torque
1) Terminals can be wired with solid wires, stranded wires, or crimped terminals can be used to connect the terminals. To use round crimped terminals, remove the terminal cover before you connect them to the terminals.
2) The connectable wire sizes and tightening torque are given in the following table.

			Main terminals		Control and auxiliary terminals
			SK06 to SK12 types	SK18 to SK32 types	
			TK12 type	TK25, TK26 types	
Direct connection	Solid wire	[mm]	1 wire x (Ø1.2 to 2) 2 wires x (Ø1.2 to 1.6) 2 wires x (Ø1.6 to 2)	1 wire x (Ø1.2 to 2.6) 2 wires x (Ø1.2 to 1.6) 2 wires x (Ø1.6 to 2)	1 wire x (Ø1.2 to 2) 2 wires x (Ø1.2 to 1.6) 2 wires x (Ø1.6 to 2)
		[AWG]	1 wire x (16 to 12) 2 wires x (16 to 14) 2 wires x (14 to 12)	1 wire x (16 to 10) 2 wires x (16 to 14) 2 wires x (14 to 12)	1 wire x (16 to 12) 2 wires x (16 to 14) 2 wires x (14 to 12)
	Stranded wires	[mm²]	1 wire x (0.75 to 2.5) 2 wires x (0.75 to 1.5) 2 wires x (1.5 to 2.5)	1 wire x (0.75 to 5.5) 2 wires x (0.75 to 1) 2 wires x (1 to 1.5) 2 wires x (1.5 to 2.5) 2 wires x (2.5 to 4)	1 wire x (0.75 to 2.5) 2 wires x (0.75 to 1.5) 2 wires x (1.5 to 2.5)
		[AWG]	1 wire x (18 to 14) 2 wires x (18 to 16) 2 wires x (16 to 14)	1 wire x (18 to 10) 2 wires x (16 to 14) 2 wires x (14 to 12)	1 wire x (18 to 14) 2 wires x (18 to 16) 2 wires x (16 to 14)
	Sheath stripping length [mm] 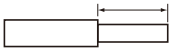		9 to 10	10 to 11	9 to 10
	Flexible stranded wires with sleeves	[mm²]	1 wire x (0.75 to 2.5) 2 wires x (0.75 to 1.5) 2 wires x (1.5 to 2.5)	1 wire x (0.75 to 2.5) 2 wires x (0.75 to 1) 2 wires x (1 to 1.5) 2 wires x (1.5 to 2.5)	1 wire x (0.75 to 2.5) 2 wires x (0.75 to 1.5) 2 wires x (1.5 to 2.5)
		[AWG]	1 wire x (18 to 14) 2 wires x (18 to 16) 2 wires x (16 to 14)	1 wire x (18 to 12) 2 wires x (16 to 14) 2 wires x (14 to 12)	1 wire x (18 to 14) 2 wires x (18 to 16) 2 wires x (16 to 14)
	Sleeve length [mm] 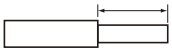		10	12	10
Terminal connection	Stranded wires or flexible stranded wires	[mm²]	0.75 to 4	0.75 to 10	0.75 to 2.5
		[AWG]	18 to 10	18 to 8	18 to 14
	Largest crimped terminal [mm] 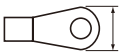		7.7	9.7	7.7
Terminal screw size			M3.5	M4	M3.5
Tightening tool			Phillips H2 screwdriver Flat-blade screwdriver, I-1x5.5xL, Type B		
Flat-blade screwdriver, 1×5.5×L, type B		[N·m]	0.8 to 1.0	1.2 to 1.5	0.8 to 1.0

Note 1. Flexible stranded wires without sleeves cannot be used. Attach sleeves before connecting the wires.
・0.75 to 4mm2 (AWG 18 to 12) stranded wire: 7 strands or less
・Flexible stranded wire: More strands that given above.
Note 2. Use DIN 46228-compliant sleeves.
・For 1.5 to 2.5mm2 (AWG 16 to 14) wires, use sleeves without insulating sheaths.
・You will not be able to insert the sleeves for some crimping tools. Use a Phoenix Contact CRIMPFOX 6 crimping tool or the equivalent. Observe manufacture instructions on the wire sheath stripping lengths.
Note 3. For compliance with UL or CSA standards, you must use AWG 14 or 12 wires. Also, you must use solid wires, or use stranded or flexible stranded wires with crimped terminals or sleeves.
Note 4. Two crimped terminals can be connected.
Note 5. Do not connect anything to terminals that are not wired.
Note 6. After you bend or otherwise arrange the connected wires after wiring, make sure that the tightening torque is still correct.
Note 7. If 18 A or higher will continuously flow through a Magnetic Contactor in an environment that exceeds 40°C, wiring with 4mm2 or AWG 12 wires.

Magnetic-Contactors
SK Series Wiring

●Connection with peripheral units

(1) AC operated type (SK□A)

A surge suppression device is not embedded in the AC operated type operating coils. Use an optional coil-surge suppression unit, if needed. For information about the choice of coil-surge suppression units, see the catalog.

(2) DC operated type (SK□G, SK□L)

A surge suppression device (varistor) is embedded in DC operated type operating coils. Therefore, there is no need to connect a surge suppression circuit externally to a normal sequential circuit. (Table 1) Connect the operating coil terminal to various pieces of DC output equipment according to Table 2.

Be careful that an operating coil terminal has A1 (plus) or A2 (minus) polarity.

Table 1 : Varistor voltage of DC operated type

Coil voltage code	Coil voltage [V]	Varistor voltage [V]
B	12	39
E	24	
F	48	100
G	60	240
1	100	
H	110	
K	120	
2	200	470
Y	210	
M	220	

Table 2 : Connection between operating coil terminal of DC operated type and a peripheral unit

Output type of equipment	No protection diode	With protection diode		
Connection method	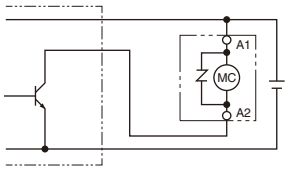	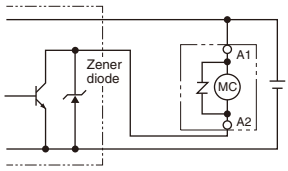	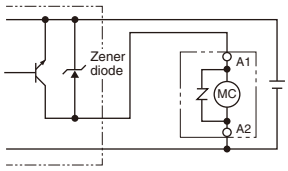	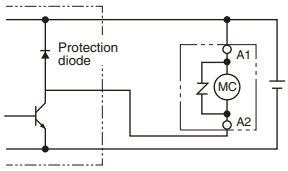
Equipment example	Various DC output models	NPN output photoelectric sensor, proximity switch, etc.	NPN output photoelectric sensor, proximity switch, etc.	Programmable controller, etc.
Cautions	The dielectric strength of output transistor should be at least the coil surge voltage plus output supply voltage.	–		Prolongs the returning time for the protection diode.

■ Applications for special environments

● Tropical wetland and cold region processing

If magnetic contactors and switches are exported or used in tropical wetlands or cold regions as single units or integrated within boards or the like, even standard products can be used under the following conditions. Special specification products should be used in more severe usage conditions.

Ambient conditions		Standard product	Products for tropical wetlands and cold regions
Temperature	In operation	-10 to +55°C	-25 to +55°C *
	In transport In storage	-40 to +65°C	-45 to +65°C
Relative humidity		85% or less	95% or less

(Note 1) Conditions assume that there's no dew condensation nor freezing due to drastic temterature change.

(Note 2) Temperature and humidity refer to the panel inside temperature.

* Thermal overload relays: Up to -10°C.

■ Handling

● Handling magnetic contactors

[Important points for inspections]

The contacts and operating coils of SK Series magnetic contactors cannot be replaced.

Only the terminal cover, terminal screws, and flexible conductors (electric wires) can be disassembled or removed.

Fuji Electric FA Components & Systems Co., Ltd.
Information subject to change without notice

● Handling Thermal Overload Relays

1) Adjusting the Current [Figure 1]
Turn the adjustment dial within the scale so that the total load current of the motor aligns with the triangle mark. Performance may not be dependable if the dial is set outside of the range of the scale.

2) Operation Indication [Figure 1]
When the Thermal Overload Relay operates, the white trip indicator will disappear in the operation indication window. (The white indicator will not be hidden if the Thermal Overload Relay is tripped in auto-reset status.)

3) Sequence Check [Figure 1]
You can perform a sequence check by pressing the white trip indicator in the direction of the arrow.

4) Reset Method [Figure 1]
When the Thermal Overload Relay operates, remove the cause of the error (e.g., an overload) and then press the reset button. (The Thermal Overload Relay will not reset unless it has cooled sufficiently.)

5) Auto-reset Status and Two-wire Circuits
If the Thermal Overload Relay is in auto-reset status for a 2-wire circuit and the Thermal Overload Relay resets automatically, the motor will restart operation automatically. Take adequate precautions for this.

6) Changing between Manual Resetting and Auto Resetting [Figure 2]
Use the following procedure to change between manual resetting and auto resetting. Reverse the procedure to change between auto resetting and manual resetting.

① Open the front cover.
② Use a screwdriver or similar device to press the reset button and turn it 90° clockwise.
③ Make sure that the reset button remains in the pressed state.
④ Close the front cover.

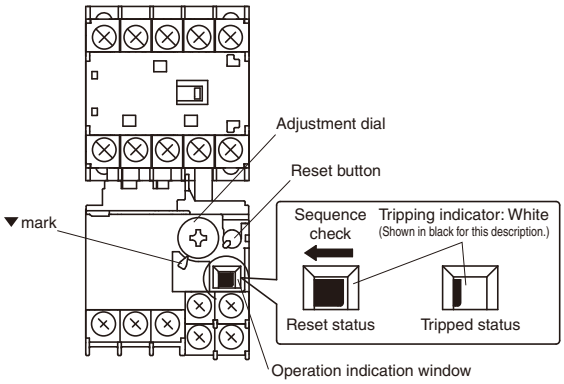

Figure 1

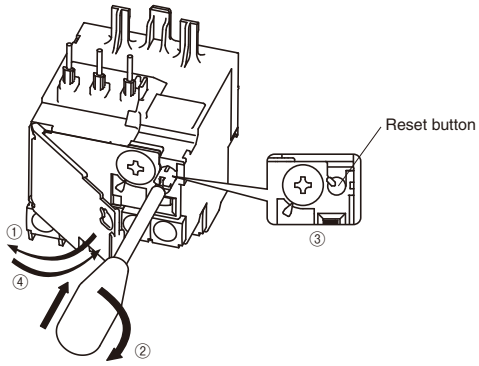

Figure 2

● Application in Single-phase Motor Circuits and DC Motor Circuits
The TK12 Thermal Overload Relays are equipped with open-phase protection. If current does not flow on all phases, the reduced operating current may cause the TK12 to operate unnecessarily. If you use the TK12 in a single-phase motor circuit or DC motor circuit, perform either Ⓐ or Ⓑ.
Ⓐ Connect the wiring so that series current flows to all of the poles.
Ⓑ Set the adjustment dial to a setting that is 5% to 10% higher than normal.

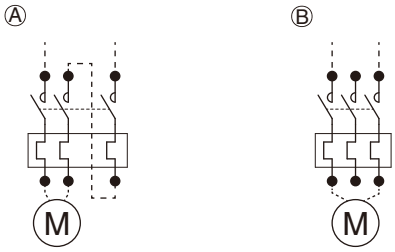

● Ambient Temperature Compensation Characteristics

Changes in the ambient environment will affect the operation of the Thermal Overload Relay. The operational current will be higher at lower temperatures and lower at higher temperatures, i.e., compensation of operating characteristics will not be complete. Adjust the current according to the application environment.

The compensation coefficient for adjusting the current depends on the ambient temperature, as shown in Figure 3. If the ambient temperature in the application changes greatly, e.g., by 20°C, use the following example as a guide to calculate the adjusted current value after compensation.

Example: Calculation Method for Dial Adjustment at an Ambient Temperature of 55°C

$$\frac{\text{Dial current at 20°C}}{\text{Compensation coefficient at ambient temperature of 55°C}} = \text{Dial current at ambient temperature of 55°C}$$

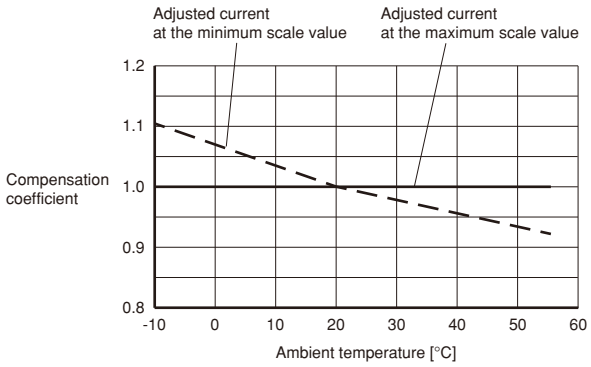

Figure 3

● Mounting the Thermal Overload Relay to and Removing It from the Magnetic Contactor

I. Mounting [Figure 4]

1) Loosen terminals 2, 4, and 6 on the Magnetic Contactor.
2) Insert the posts on the Thermal Overload Relay into the holes on the Magnetic Contactor in the direction shown by the arrows.
3) Insert the main circuit section of the Thermal Overload Relay on the right sides of the terminal screws.
4) Tighten the terminal screws on the Magnetic Contactor to the specified torque.

II. Removing [Figure 4]

1) Loosen the terminals screws on the Magnetic Contactor.
2) Move the Thermal Overload Relay left and right and pull it free from the Magnetic Contactor.

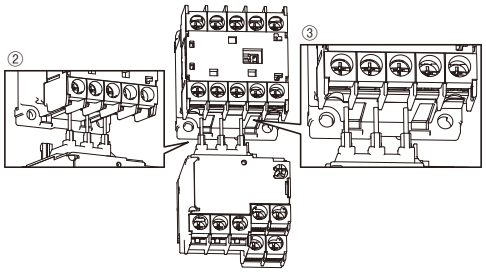

Figure 4

■ Refresh recommendation

The main contacts, mechanical components, and other parts in Fuji magnetic contactors and switches have a wear life expectancy based on the number of times they are switched. Coil electric wires and electronic components in electronic units have a life expectancy based on degradation over time according to the environment and conditions they are used in.

We recommend refreshing Fuji magnetic contactors and switches when they reach the specified number of times switched as noted in the user's manual or catalog, or roughly 10 years from the manufacture date under standard usage conditions as noted in the "Survey Concerning Recommended Refresh Periods for Low Voltage Devices" report published by The Japan Electrical Manufacturers' Association (JEMA).

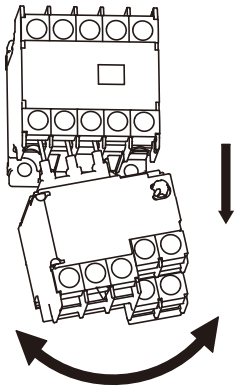

Figure 5

Magnetic Contactors

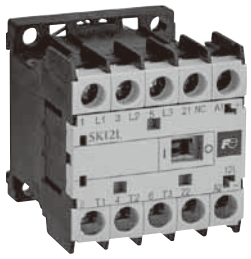

SK12L

■ Features

- International safety standards for standard models (IEC, GB, JIS, UL, and CSA).
- Models available with AC or DC operating coils (DC: 2.4W and 1.2W models only).
- Many optional units.
  - Auxiliary Contact Blocks (2-pole or 4-pole)
  - Coil Surge Suppression Units
  - Interlock Units
- Easier Thermal Overload Relay wiring.
  The terminal arrangement separates main circuit wires and auxiliary circuit wires for easier wiring.

■ Ordering Information (Types)

- Magnetic Contactors

SK 06 A H - E 10
① ② ③ ④ ⑤ ⑥

①Series
②Frame size
③Operating coil specification
④Auxiliary contact specification
⑤Coil voltage specification
⑥Auxiliary contact arrangement

■ Ratings and Types

- Magnetic Contactors SK06, 09, 12

Frame size ②	Max. motor capacity [kW]			Rated operational current [A]					Conventional free air thermal current [A] (Rated thermal current)	Operating coil specification ③	Auxiliary contact specification ④	Auxiliary contact arrangement ⑥	Type
	3-phase squirrel-cage motor (AC-3)			3-phase squirrel-cage motor (AC-3)			Resistive load (AC-1)						
	200-240V	380-440V	500-550V	200-240V	380-440V	500-550V	200-240V	380-440V					
6A [06]	1.5	2.2	3	6	6	5	12	12	20	AC-operated [A]	Bifurcated [blank]	1NO [10] 1NC [01]	**SK06A-□▲**
											Single [H]		**SK06AH-□▲**
										DC-operated (2.4W) [G]	Bifurcated [blank]		**SK06G-□▲**
											Single [H]		**SK06GH-□▲**
										DC-operated (1.2W) [L]	Bifurcated [blank]		**SK06L-□▲**
											Single [H]		**SK06LH-□▲**
9A [09]	2.2	4	4	9	9	7	16	16		AC-operated [A]	Bifurcated [blank]		**SK09A-□▲**
											Single [H]		**SK09AH-□▲**
										DC-operated (2.4W) [G]	Bifurcated [blank]		**SK09G-□▲**
											Single [H]		**SK09GH-□▲**
										DC-operated (1.2W) [L]	Bifurcated [blank]		**SK09L-□▲**
											Single [H]		**SK09LH-□▲**
12A [12]	3	5.5	5.5	12	12	9	20	20		AC-operated [A]	Bifurcated [blank]		**SK12A-□▲**
											Single [H]		**SK12AH-□▲**
										DC-operated (2.4W) [G]	Bifurcated [blank]		**SK12G-□▲**
											Single [H]		**SK12GH-□▲**
										DC-operated (1.2W) [L]	Bifurcated [blank]		**SK12L-□▲**
											Single [H]		**SK12LH-□▲**

Note 1. "□" in the type column is replaced with the coil voltage code.
Note 2. "▲" in the type column is replaced with the auxiliary contact arrangemant code.
Note 3. Numbers and letters in brackets [ ] are used in the product code.

Magnetic-Contactors
SK Series Magnetic Contactors

● Magnetic Contactors SK18, 22, 32

Frame size ②	Max. motor capacity [kW]			Rated operational current [A]					Conventional free air thermal current [A] (Rated thermal current)	Operating coil specification ③	Auxiliary contact specification ④	Auxiliary contact arrangement ⑥	Type
	3-phase squirrel-cage motor (AC-3)			3-phase squirrel-cage motor (AC-3)			Resistive load (AC-1)						
	200-240V	380-440V	500-550V	200-240V	380-440V	500-550V	200-240V	380-440V					
18A [18]	4.5	7.5	7.5	18	32	32	32	32	32	AC-operated [A]	Bifurcated [blank]	1NO [10] 1NC [01]	**SK18A-□▲**
											Single [H]		**SK18AH-□▲**
										DC-operated (2.4W) [G]	Bifurcated [blank]		**SK18G-□▲**
											Single [H]		**SK18GH-□▲**
22A [22]	5.5	11	11	22	32	32	32	32	32	AC-operated [A]	Bifurcated [blank]		**SK22A-□▲**
											Single [H]		**SK22AH-□▲**
										DC-operated (2.4W) [G]	Bifurcated [blank]		**SK22G-□▲**
											Single [H]		**SK2GH-□▲**
32A [32]	7.5	15	15	32	40	40	40	40	40	AC-operated [A]	Bifurcated [blank]		**SK32A-□▲**
											Single [H]		**SK32AH-□▲**
										DC-operated (2.4W) [G]	Bifurcated [blank]		**SK32G-□▲**
											Single [H]		**SK32GH-□▲**

Note 1. "□" in the type column is replaced with the coil voltage code.
Note 2. "▲" in the type column is replaced with the auxiliary contact arrangemant code.
Note 3. Numbers and letters in brackets [ ] are used in the product code.

● Coil voltage ⑤

AC-operated	Order Voltage	24	48	100	110	120	200	220	240	380	400	440	500
	Product code	E	F	1	H	K	2	M	P	S	4	T	5
DC-operated (2.4W)	Order Voltage	12	24	48	60	100	110	120	200	210	220		
	Product code	B	E	F	G	1	H	K	2	Y	M		
DC-operated (1.2W)	Order Voltage	12	24	48									
	Product code	B	E	F									

■ Dimensions, mm

● Magnetic Contactors
SK06, SK09, SK12

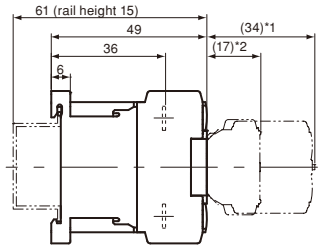

Note:
*1 With SZ1KA□ auxiliary contact blocks.
*2 With SZ1FA□ auxiliary contact blocks.

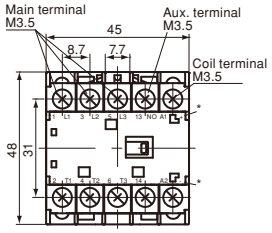

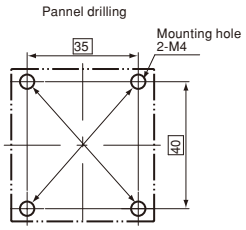

Use the two mounting holes on a diagonal

Aux. contact	Contact arrangement
1NO	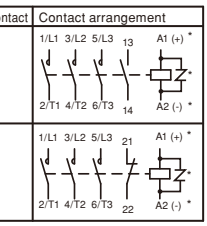
1NC	

*: For DC-operated

Mass:
0.14kg (For AC-operated)
0.17kg (For DC-operated)

SK18A, SK22A

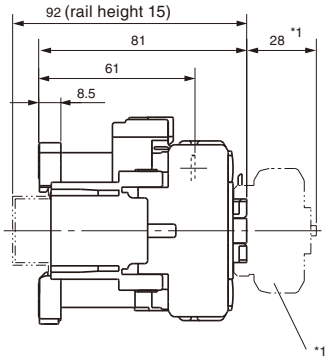

Note:
*1 With font mounting auxiliary contact block
*2 With side mounting auxiliary contact block

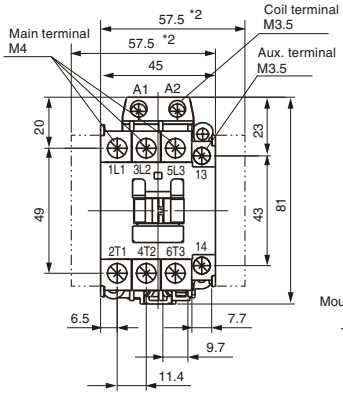

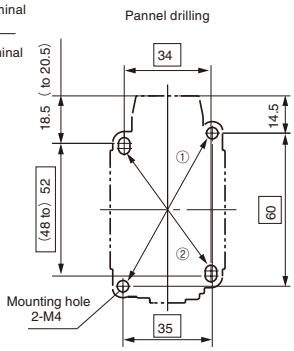

Use the two mounting holes on a diagonal
① 35 x 60
② 34 x (48 to) 52: Convertible with SC-4-0,SC-4-1

Aux. contact	Contact arrangement
1NO	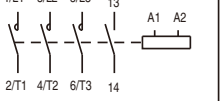
1NC	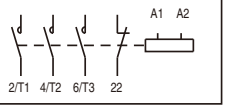

Mass: 0.34kg

SK18G, SK22G

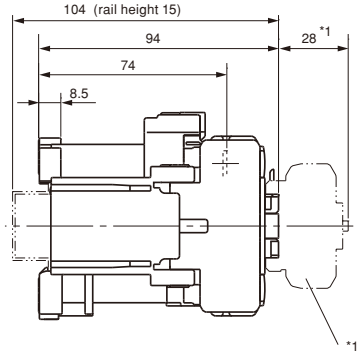

Note:
*1 With font mounting auxiliary contact block
*2 With side mounting auxiliary contact block

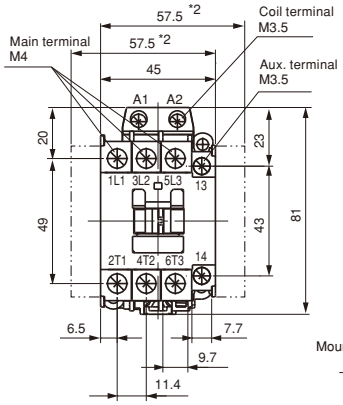

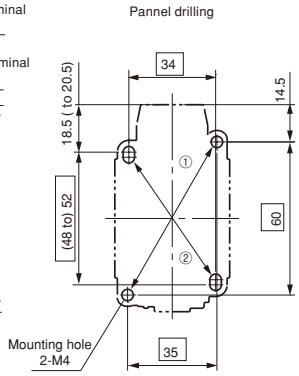

Use the two mounting holes on a diagonal
① 35 x 60
② 34 x (48 to) 52: Convertible with SC-4-0/G,SC-4-1/G

Aux. contact	Contact arrangement
1NO	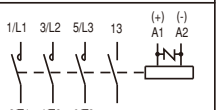
1NC	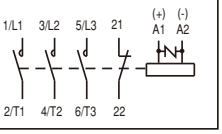

Mass: 0.43kg

Magnetic-Contactors
SK Series Magnetic Contactors

SK32A

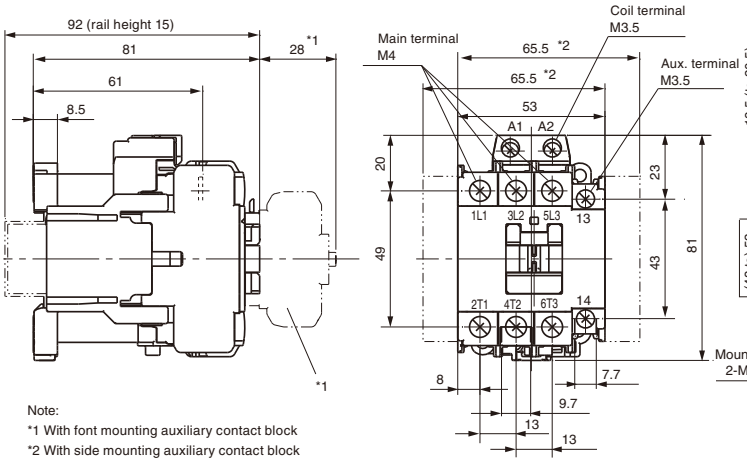

Note:
*1 With font mounting auxiliary contact block
*2 With side mounting auxiliary contact block

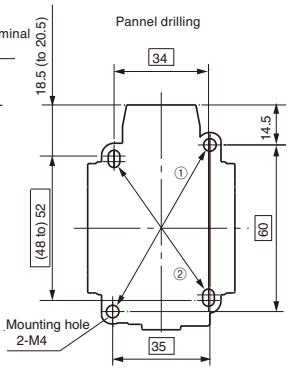

Use the two mounting holes on a diagonal
① 35 x 60
② 34 x (48 to) 52: Convertible with SC-4-0,SC-4-1

Aux. contact	Contact arrangement
1NO	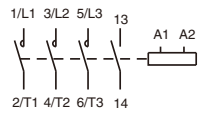
1NC	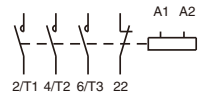

Mass: 0.37kg

SK32G

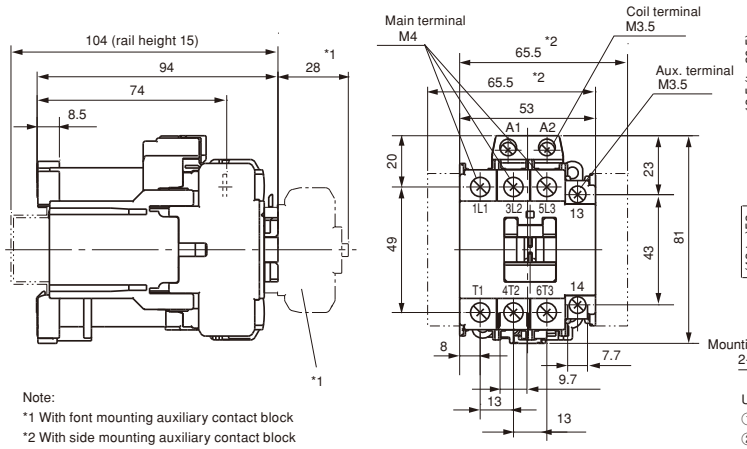

Note:
*1 With font mounting auxiliary contact block
*2 With side mounting auxiliary contact block

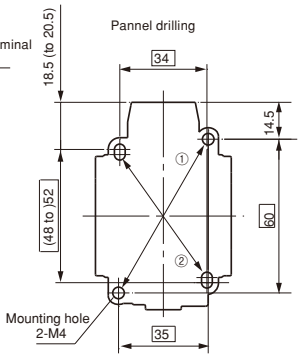

Use the two mounting holes on a diagonal
① 35 x 60
② 34 x (48 to) 52: Convertible with SC-4-0,SC-4-1

Aux. contact	Contact arrangement
1NO	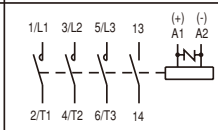
1NC	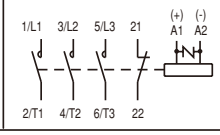

Mass: 0.48kg

Reversing Magnetic Contactors

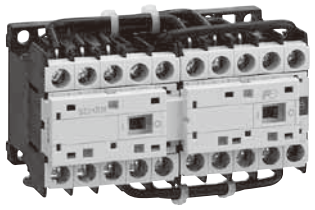

SK12AR

■ Features

- Ideal for forward/reverse motor operation and plugging.
- Mechanical interlock provided as a standard feature.

■ Ordering Information (Types)

- Reversing Magnetic Contactors

SK 06 A H R - E 10 W
① ② ③ ④ ⑤ ⑥ ⑦ ⑧

①Series
②Frame size
③Operating coil specification
④Auxiliary contact specification
⑤Reversing
⑥Coil voltage specification
⑦Auxiliary contact arrangement
⑧Reversing connection

■ Ratings and Types

- Reversing Magnetic Contactors SK06, SK09, SK12

Frame size ②	Max. motor capacity [kW]			Rated operational current [A]					Conventional free air thermal current [A] (Rated thermal current)	Operating coil specification ③	Auxiliary contact specification ④	Auxiliary contact arrangement ⑦	Type
	3-phase squirrel-cage motor (AC-3)			3-phase squirrel-cage motor (AC-3)			Resistive load (AC-1)						
	200-240V	380-440V	500-550V	200-240V	380-440V	500-550V	200-240V	380-440V					
6A [06]	1.5	2.2	3	6	6	5	12	12	20	AC-operated [A]	Bifurcated [blank]	1NO x 2 [10] 1NC x 2 [01]	**SK06AR-□▲W**
											Single [H]		**SK06AHR-□▲W**
										DC-operated (2.4W) [G]	Bifurcated [blank]		**SK06GR-□▲W**
											Single [H]		**SK06GHR-□▲W**
										DC-operated (1.2W) [L]	Bifurcated [blank]		**SK06LR-□▲W**
											Single [H]		**SK06LHR-□▲W**
9A [09]	2.2	4	4	9	9	7	16	16		AC-operated [A]	Bifurcated [blank]		**SK09AR-□▲W**
											Single [H]		**SK09AHR-□▲W**
										DC-operated (2.4W) [G]	Bifurcated [blank]		**SK09GR-□▲W**
											Single [H]		**SK09GHR-□▲W**
										DC-operated (1.2W) [L]	Bifurcated [blank]		**SK09LR-□▲W**
											Single [H]		**SK09LHR-□▲W**
12A [12]	3	5.5	5.5	12	12	9	20	20		AC-operated [A]	Bifurcated [blank]		**SK12AR-□▲W**
											Single [H]		**SK12AHR-□▲W**
										DC-operated (2.4W) [G]	Bifurcated [blank]		**SK12GR-□▲W**
											Single [H]		**SK12GHR-□▲W**
										DC-operated (1.2W) [L]	Bifurcated [blank]		**SK12LR-□▲W**
											Single [H]		**SK12LHR-□▲W**

Note 1. "□" in the type column is replaced with the coil voltage code.
Note 2. "▲" in the type column is replaced with the auxiliary contact arrangemant code.
Note 3. Numbers and letters in brackets [ ] are used in the product code.
Note 4. An electrical interlock is not implemented on Magnetic Contactors with an auxiliary contact arrangement of 1NOx2. When using these Magnetic Contactors, always implement an electrical interlock in the external control circuits to prevent short-circuit faults when power is turned ON.
Note 5. An electrical interlock is implemented in the auxiliary circuit configurations of the Magnetic Contactor. If you need to use an auxiliary contact, add an option Auxiliary Contact Blocks.

Magnetic-Contactors
SK Series Reversing Magnetic Contactors

● Reversing Magnetic Contactors SK18, SK22, SK,32

Frame size ②	Max. motor capacity [kW]			Rated operational current [A]					Conventional free air thermal current [A] (Rated thermal current)	Operating coil specification ③	Auxiliary contact specification ④	Auxiliary contact arrangement ⑦	Type
	3-phase squirrel-cage motor (AC-3)			3-phase squirrel-cage motor (AC-3)			Resistive load (AC-1)						
	200-240V	380-440V	500-550V	200-240V	380-440V	500-550V	200-240V	380-440V					
18A [18]	4.5	7.5	7.5	18	18	13	32	32	32	AC-operated [A]	Bifurcated [blank]	1NO x 2 [10] 1NC x 2 [01]	**SK18AR-□▲W**
											Single [H]		**SK18AHR-□▲W**
										DC-operated (2.4W) [G]	Bifurcated [blank]		**SK18GR-□▲W**
											Single [H]		**SK18GHR-□▲W**
22A [22]	5.5	11	11	22	22	17	32	32	32	AC-operated [A]	Bifurcated [blank]		**SK22AR-□▲W**
											Single [H]		**SK22AHR-□▲W**
										DC-operated (2.4W) [G]	Bifurcated [blank]		**SK22GR-□▲W**
											Single [H]		**SK22GHR-□▲W**
32A [32]	7.5	15	15	32	32	24	40	40	40	AC-operated [A]	Bifurcated [blank]		**SK32AR-□▲W**
											Single [H]		**SK32AHR-□▲W**
										DC-operated (2.4W) [G]	Bifurcated [blank]		**SK32GR-□▲W**
											Single [H]		**SK32GHR-□▲W**

Note 1. "□" in the type column is replaced with the coil voltage code.
Note 2. "▲" in the type column is replaced with the auxiliary contact arrangemant code.
Note 3. Numbers and letters in brackets [ ] are used in the product code.
Note 4. An electrical interlock is not implemented on Magnetic Contactors with an auxiliary contact arrangement of 1NOx2. When using these Magnetic Contactors, always implement an electrical interlock in the external control circuits to prevent short-circuit faults when power is turned ON.
Note 5. An electrical interlock is implemented in the auxiliary circuit configurations of the Magnetic Contactor. If you need to use an auxiliary contact, add an option Auxiliary Contact Blocks.

● Coil voltage ⑥

AC-operated	Order Voltage	24	48	100	110	120	200	220	240	380	400	440	500
	Product code	E	F	1	H	K	2	M	P	S	4	T	5
DC-operated (2.4W)	Order Voltage	12	24	48	60	100	110	120	200	210	220		
	Product code	B	E	F	G	1	H	K	2	Y	M		
DC-operated (1.2W)	Order Voltage	12	24	48									
	Product code	B	E	F									

■ Dimensions, mm

● Magnetic Contactors
SK06□R, SK09□R, SK12□R

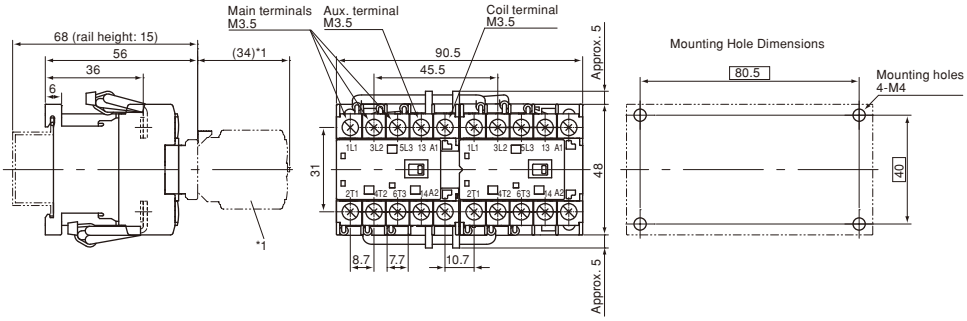

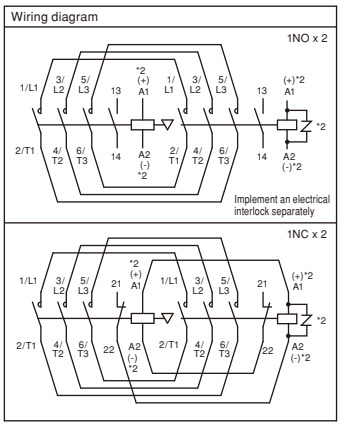

[NOTE]
*1 With Auxiliary Contact Blocks
*2 For DC-operated types.

Mass: 0.32kg (AC-operated type)
0.38kg (DC-operated type)

SK18AR, SK22AR

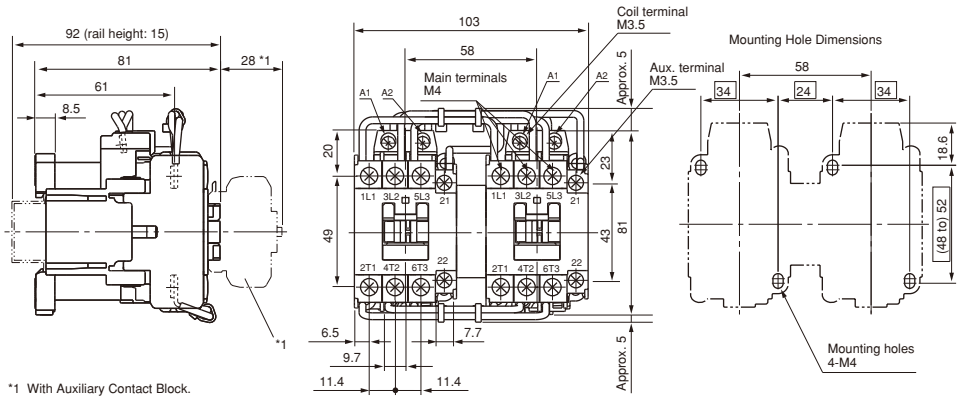

*1 With Auxiliary Contact Block.

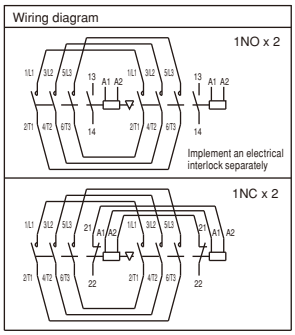

Mass: 0.73kg

SK18GR, SK22GR

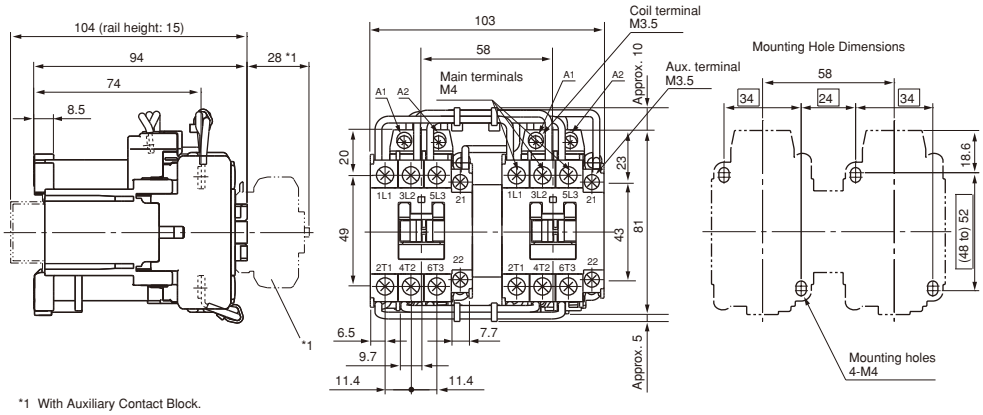

*1 With Auxiliary Contact Block.

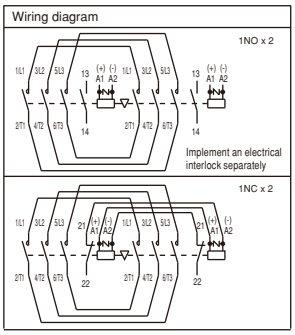

Mass: 0.9kg

■ Dimensions, mm

SK32AR

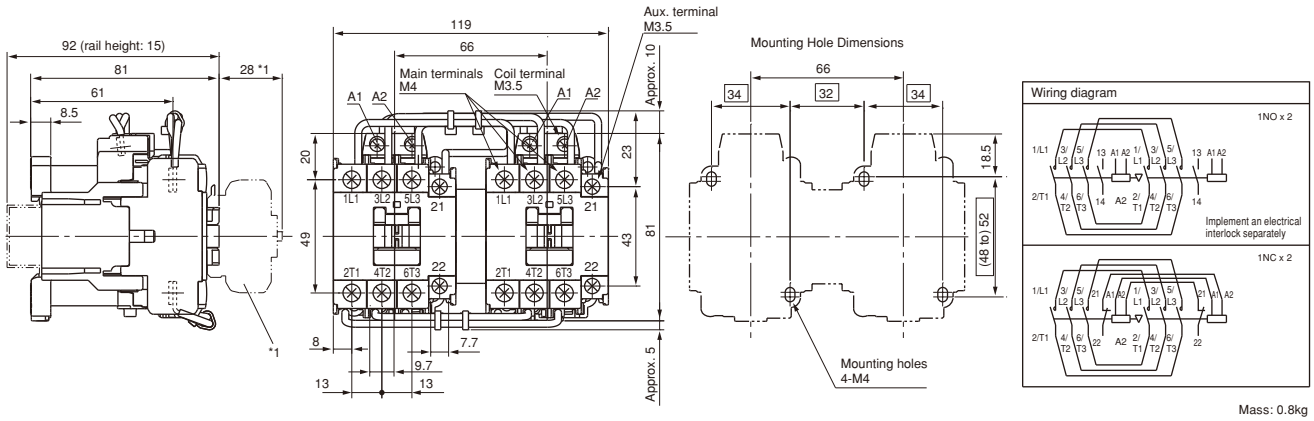

Mass: 0.8kg

*1 With Auxiliary Contact Block.

SK32GR

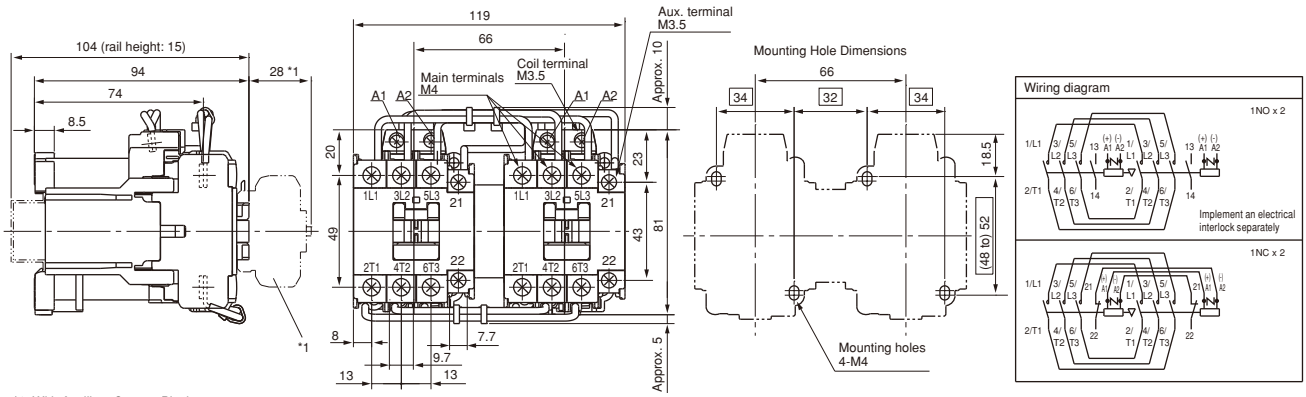

Mass: 1.01kg

*1 With Auxiliary Contact Block.

Main contact 4-pole magnetic contactor

■ Features

- Perfect for applications where four wires are required for the main circuit
- 4NO product and 2NO2NC product main contacts are available
- The operation coil is a low consumption unit with a power consumption of 1.2 W.

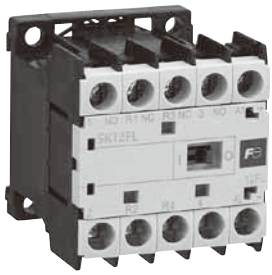

SK12FL

■ Ordering Information (Types)

- Main contact 4-pole magnetic contactor

SK12EL - E
① ②

①Basic types
②Coil voltage specification

- Coil voltage specification code

Coil voltage ②	Code	Coil specification
12V DC 24V DC	B E	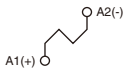

(Note 1) The allowable power fluctuation range is 85 to 110% of the rated voltage.
(Note 2) Be careful, as operating coil terminals have polarity.

■ Ratings and Types

Main contact (NO)								Main contact (NC)			Conventional free air thermal current [A] (Rated thermal current)	Main contact arrangement	Type
Max. motor capacity [kW]			Rated operational current [A]					Rated operational current [A]					
3-phase squirrel-cage motor (AC-3)			3-phase squirrel-cage motor (AC-3)			Resistive load (AC-1)		Resistive load (AC-1)					
200-240V	380-440V	500-550V	200-240V	380-440V	500-550V	200-240V	380-440V	200-240V	380-440V	500-550V			
3	5.5	5.5	12	12	9	20	20	–	–	–	20	4NO	**SK12EL-□**
–	–	–	–	–	–			10	10	5		2NO2NC	**SK12FL-□**

(Note 1) This product is not equipped with auxiliary contacts. If necessary, combine it with a 2-pole auxiliary contact block product.
(Note 2) It cannot be combined with a 4-pole auxiliary contact block product.

■ Performance

Type	Rated operational voltage [V]	Rated operational current [A]	Making/breaking current [A]		Operating cycles per hour [times hour]	Durability (Operations)		Performance indication
			Making	Breaking		Mechanical	Electrical	
SK12EL-□ **SK12FL-□**	220	12	144	120	1800	1000	100	AC-3·0·0-0
	440	12	144	120				

■ Dimensions, mm

SK12EL
SK12FL

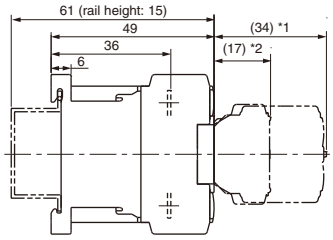

*1 When an auxiliary contact block (SZ1KA20, 11, 02) (front mounting) was installed
*2 When an auxiliary contact block (SZ1FA11) (front mounting) was installed

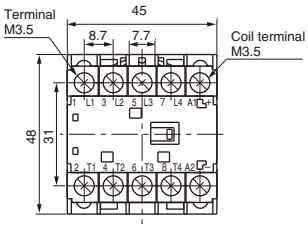

Mounting Hole Dimensions

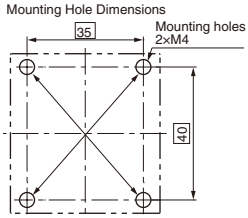

●Mounting screw : 2-M4
Install using two mounting holes in opposite corners.

Type (Contact arrangement)	Contact arrangement diagram
SK12EL (4A)	
SK12FL (2A2B)	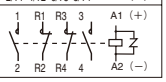

Mass: 0.14kg (AC operated)
0.17kg (DC operated)

Magnetic contactor with tab terminal

■ Features

- This magnetic contactor supports tab terminal connections.
- Can be applied to three-phase motors (AC 230 V, 3 kW).
- The operation coil has a low power consumption of 1.2 W.
- High life expectancy type, with an electrical life expectancy of 1,000,000 operations
- Built-in operation coil switch surge suppression function.

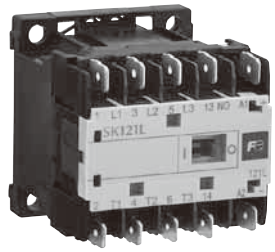

SK121L

■ Ordering Information (Types)

- Magnetic contactor with tab terminal

SK121L - E 10
① ② ③

①Basic types
②Coil voltage specification
③Auxiliary contact arrangement

- Coil voltage specification code

Coil voltage ②	Code	Coil specification
12V DC	B	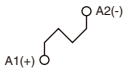
24V DC	E	

(Note 1) The allowable power fluctuation range is 85 to 110% of the rated voltage.
(Note 2) Be careful, as operating coil terminals have polarity.

■ Ratings and Types

Max. motor capacity [kW]			Rated operational current [A]			Conventional free air thermal current [A] (Rated thermal current)	Auxiliary contact arrangement	Type
3-phase squirrel-cage motor (AC-3)			3-phase squirrel-cage motor (AC-3)					
200-240V	380-440V	500-550V	200-240V	380-440V	500-550V			
3	5.5	5.5	12	12	9	15	1NO	**SK121L**
							1NC	

■ Performance

Type	Rated operational voltage [V]	Rated operational current [A]	Making/breaking current [A]		Operating cycles per hour [times hour]	Durability (Operations)		Performance indication
			Making	Breaking		Mechanical	Electrical	
SK121L	220	12	120	96	1800	1000	100	AC-3·0·0-0
	440	12	120	96				

■ Connection terminal

IEC 61210 "Flat quick-connect terminations for electrical copper" Size: 6.3mm
[Recommended terminal]
• Manufacturer : JST
• Product code : FVDHDF1.25-250B (Applicable wire : 1.0 to 1.65mm^2)
FVDHDF2-250B (Applicable wire : 1.65 to 2.63mm^2)
(250 series)

■ Dimensions, mm

SK121L

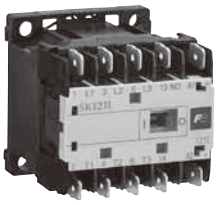

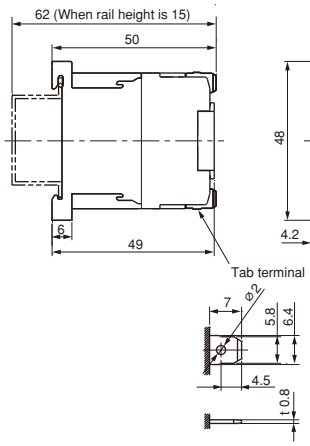

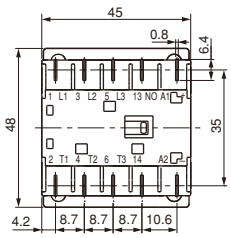

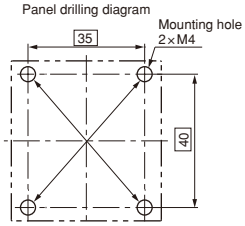

●Mounting screw: 2-M4
Mount using two mounting holes that are in a diagonal line.

Auxiliary contact	Contact arrangement diagram
1NO	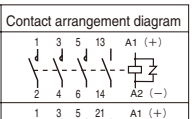
1NC	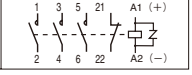

Mass: 0.17kg

PC board mounting magnetic contactor

■ Features

- Includes a terminal for installing PC boards.
- Capable of directly driving a 3-phase motor (AC 230 V, 2.2 kW) without an interface relay, using programmable controller or detector transistor output (1.2 W).

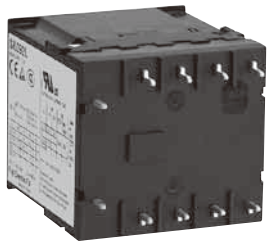

SK092L

■ Ordering Information (Types)

- PC board mounting magnetic contactor

SK092L - E 10
① ② ③

①Basic types
②Coil voltage specification
③Auxiliary contact arrangement

- Coil voltage specification code

Coil voltage ②	Code	Coil specification
12V DC 24V DC	B E	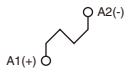

(Note 1) The allowable power fluctuation range is 85 to 110% of the rated voltage.
(Note 2) Be careful, as operating coil terminals have polarity.

■ Ratings and Types

Max. motor capacity [kW]		Rated operational current [A]			Conventional free air thermal current [A]	Auxiliary contact arrangement	Type
3-phase squirrel-cage motor (AC-3)		3-phase squirrel-cage motor (AC-3)		Resistive load (AC-1)			
200-240V	380-440V	200-240V	380-440V	200-240V			
2.2	4	9	9	9	9	1NO	**SK092L**
						1NC	

⚠ CAUTION Wiring

- When installing directly to a PC board (SK092L model)

Take enough current-carrying capacity for the PC board conductor.

(Recommended example) PC board
Conductor thickness: 70 [μm]
Conductor width: 6 [mm]
Conductor cross-section area: 0.42 [mm²]

- Precautions for PC board mounting

No measures have been taken to prevent solder, flux, or other materials from entering the magnetic contactor. If solder, flux, or other materials enter the magnetic contactor, it could cause insulation deterioration, contact failures, or other problems.
Follow the precautions below for PC board mounting:
· Solder by hand. Make sure that solder, flux, or other materials do not enter the magnetic contactor.
· Use non-corrosive flux (for example, rosin-based flux).
· Do not wash after soldering. If it must be washed, only wash the solder surface to prevent the wash solution from entering the magnetic contactor. Use an alcohol-based wash solution.
· Do not coat. If the coating agent enters the magnetic contactor, it could cause contact failures.
· After soldering, do not lift the PC board up by the magnetic contactor.

■ Performance

Type	Rated operational voltage [V]	Rated operational current [A]	Making/breaking current [A]		Operating cycles per hour [times hour]	Durability (Operations)		Performance indication
			Making	Breaking		Mechanical	Electrical	
SK092L	220	9	90	72	1800	1000	100	AC-3·0·0-0
	440	9	90	72				

■ Dimensions, mm

SK092L

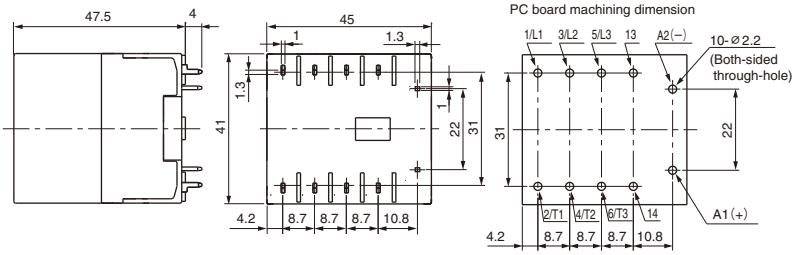

Auxiliary contact	Contact arrangement diagram
1NO	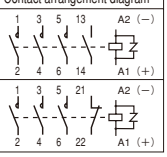
1NC	

Mass: 0.17kg

Thermal Overload Relay

■ Features

- International safety standards for standard models (IEC, GB, JIS, UL, and CSA).
- A terminal cover and dial cover are provided as standard features.
- Highly reliable 1NO1NC isolated auxiliary contacts to enable using NC and NO contacts at different potentials.
- Easily switch between manual and automatic reset.
- Parallel arrangement of main terminals and auxiliary terminals for easier wiring.

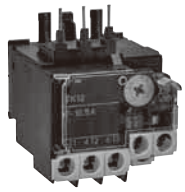

TK12

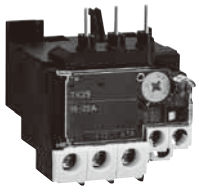

TK25

■ Ratings and Types

Type
TK12W□-■■■
TK25□-■■■
TK26□-■■■

Note. "□" in the type column is replaced with the reset method code.
"■■■" is replaced by the specified code for the current setting range.

■ Ordering Information (Types)

- Thermal Overload Relay

TK 12 W A - 009
① ② ③ ④ ⑤

①Type
②Frame size
③Mounting * TK12 only
④Reset method
⑤Ampere setting range *
* Refer to Heat Element Rating Specification Codes.

■ Ampere Setting Range Specification Codes

Type			Ampere setting range (A)	Ordering code	Applicable magnetic contactors					
TK12	TK25	TK26	0.1 - 0.15	**P10**	SK06	SK09	SK12	SK18	SK22	SK32
			0.13 - 0.2	**P13**						
			0.18 - 0.27	**P18**						
			0.24 - 0.36	**P24**						
			0.34 - 0.52	**P34**						
			0.48 - 0.72	**P48**						
			0.64 - 0.96	**P64**						
			0.8 - 1.2	**P80**						
			0.95 - 1.45	**P95**						
			1.1 - 1.65	**1P1**						
			1.4 - 2.1	**1P4**						
			1.7 - 2.6	**1P7**						
			2.2 - 3.4	**2P2**						
			2.8 - 4.2	**2P8**						
			4 - 6	**004**						
			5 - 7.5	**005**	–					
			6 - 9	**006**						
			7 - 10.5	**007**						
			9 - 13	**009**		–				
–			12 - 18	**012**						
			16 - 22	**016**			–			
	–		20 - 26	**020**				–		
			26 - 32	**026**					–	

Information subject to change without notice

■ Auxiliary Circuit Ratings

● Ratings for IEC Standard Compliance

Type	Conventional free air thermal current [A] (Rated continuous current)	Rated operational current [A]					Minimum voltage and current
		Rated operational voltage [V]	AC-15 (Ind. load)		DC-13 (Ind. load)		
			NC contacts	NO contacts	NC contacts	NO contacts	
TK12	5	24	3 (0.5)	3 (0.5)	1.1(0.3)	1.1 (0.3)	DC5V, 3mA
		100-120	2.5 (0.5)	2.5 (0.5)	0.28	0.28	
		200-240	2 (0.5)	1.5 (0.5)	0.14	0.14	
		380-440	1 (0.5)	0.75 (0.5)	–		
		500-600	0.6 (0.5)	0.6 (0.5)	–		
TK25 TK26	5	24	3 (0.5)	3 (0.5)	1.1(0.3)	1.1 (0.3)	DC5V, 3mA
		100-120	2.5 (0.5)	2.5 (0.5)	0.28	0.28	
		200-240	2 (0.5)	2 (0.5)	0.14	0.14	
		380-440	1 (0.5)	1 (0.5)	–		
		500-600	0.6 (0.5)	0.6 (0.5)	–		

Numbers in brackets ( ) are for automatic reset.

● Ratings for UL and CSA Standard Compliance

Type	Rated continuous current [A]	Rated operational current [A]						Rating code	
		AC			DC				
		Rated operational voltage [V]	Making	Breaking	Rated operational voltage [V]	Making	Breaking	AC	DC
TK12 TK25 TK26	5	120	30	3	125	0.22	0.22	B600	R300
		240	15	1.5					
		480	7.5	0.75	250	0.11	0.11		
		600	6	0.6					

■ Operating Characteristics (Specifications)

● 3-pole Circuits

Standard	Operating limit		Overload (hot start)	Locked rotor (cold start)	Ambient temperature
	Non-tripping	Tripping			
IEC 60947-4-1	105% Ie (for less than 2h)	120% Ie (for less than 2h)	Tripping class 10A: 150% Ie for less than 2min	Tripping class 10A: 720% Ie for 2 to 10 s max.	20℃

● 2-pole Circuits

Standard	Phase-loss protection	Non-tripping	Operation (hot start)	Ambient temperature
IEC 60947-4-1	Provided.	2-pole: 100% Ie 1-pole: 90% Ie	{ 2-pole: 115% Ie (for less than 2h) 1-pole:0% Ie	20℃

A2

■ Operating Characteristics Curves (Average Values)

● Tripping Class 10A

TK12, TK25, TK26 series, Ambient temperature: 20°C

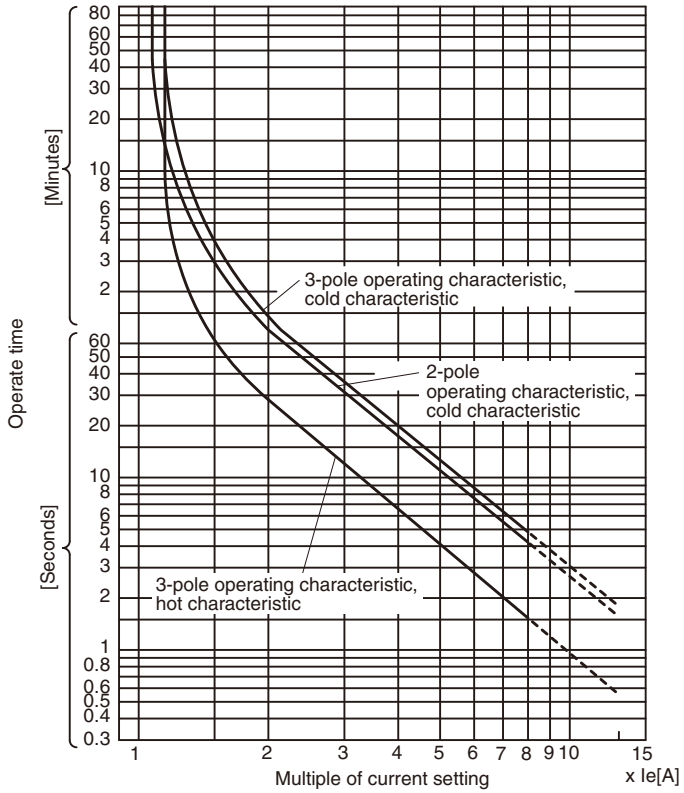

■ Dimensions, mm

● Thermal Overload Relay

TK12

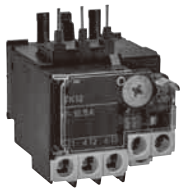

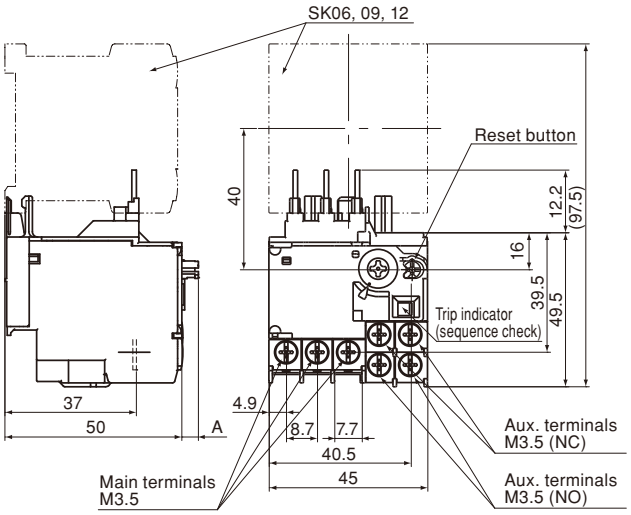

Wiring diagram

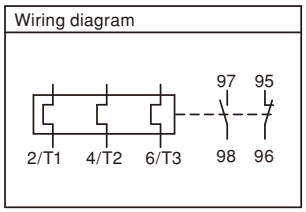

Mass : 0.1kg

Dimension A
- Manually reset state: 5mm
- Automatically reset state: 2mm

TK25

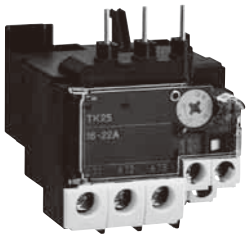

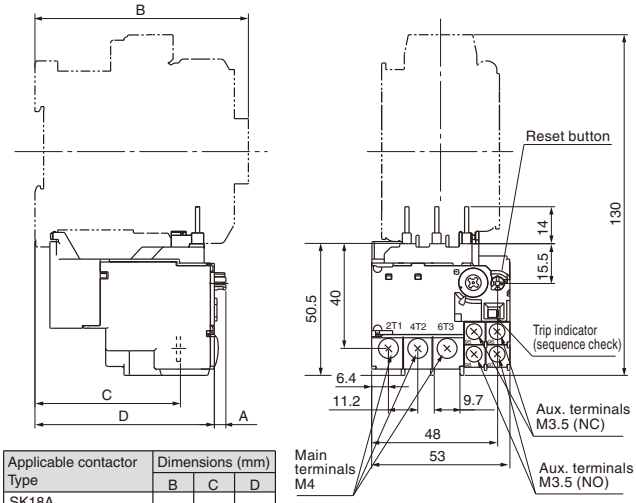

Applicable contactor Type	Dimensions (mm)		
	B	C	D
SK18A SK22A	81	55.5	68.5
SK18G SK22G	94	68.5	81.5

Wiring diagram

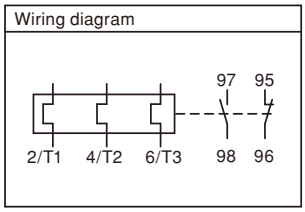

Mass: 0.11kg

Dimension A
- Manually reset state: 5mm
- Automatically reset state: 2mm

TK26

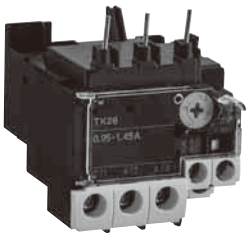

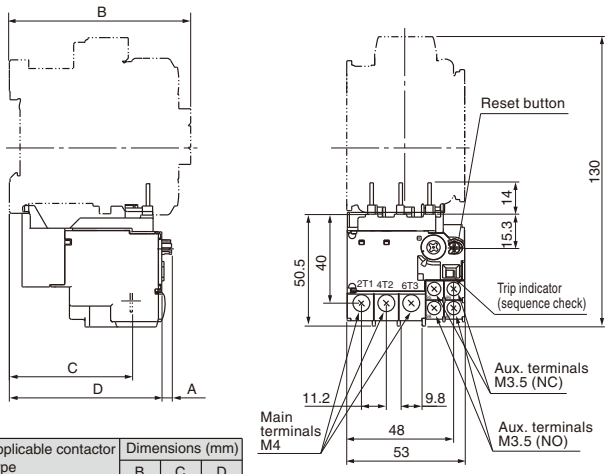

Applicable contactor Type	Dimensions (mm)		
	B	C	D
SK32A	81	55.5	68.5
SK32G	94	68	81

Wiring diagram

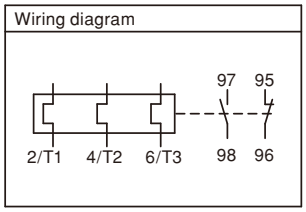

Mass: 0.11kg

Dimension A
- Manually reset state: 5mm
- Automatically reset state: 2mm

Optional unit

■ Type Numbers and Product Codes

Product name	Type	Specification	Used with
Auxiliary Contact Blocks (Front mounting, Bifurcated Contact)	**SZ1KA40**	Contact arrangement: 4NO	SK06 to SK12 *1 SKH4 *1
	SZ1KA31	Contact arrangement: 3NO+1NC	
	SZ1KA22	Contact arrangement: 2NO+2NC	
	SZ1KA13	Contact arrangement: 1NO+3NC	
	SZ1KA04	Contact arrangement: 4NC	
	SZ-A20	Contact arrangement: 2NO	SK18, SK22, SK32 *3
	SZ-A11	Contact arrangement: 1NO+1NC	
	SZ-A02	Contact arrangement: 2NC	
	SZ-A111	Make-before-break contact: 1NO+1NC	
	SZ1KA20	Contact arrangement: 2NO	SK06 to SK12 SKH4
	SZ1KA11	Contact arrangement: 1NO+1NC	
	SZ1KA02	Contact arrangement: 2NC	
Auxiliary Contact Blocks (Front mounting, Single Button Contact)	**SZ1KA40H**	Contact arrangement: 4NO	SK06 to SK12 *1 SKH4 *1
	SZ1KA31H	Contact arrangement: 3NO+1NC	
	SZ1KA22H	Contact arrangement: 2NO+2NC	
	SZ1KA13H	Contact arrangement: 1NO+3NC	
	SZ1KA04H	Contact arrangement: 4NC	
	SZ1KA20H	Contact arrangement: 2NO	SK06 to SK12 SKH4
	SZ1KA11H	Contact arrangement: 1NO+1NC	
	SZ1KA02H	Contact arrangement: 2NC	
	SZ-A20H	Contact arrangement: 2NO	SK18, SK22, SK32 *3
	SZ-A11H	Contact arrangement: 1NO+1NC	
	SZ-A02H	Contact arrangement: 2NC	
Auxiliary Contact Blocks (Small Front mounting, Bifurcated Contact)	**SZ1FA11**	Contact arrangement: 1NO+1NC	SK06 to SK12 SKH4
Auxiliary Contact Blocks (Small Front mounting, Single Button Contact)	**SZ1FA11H**	Contact arrangement: 1NO+1NC	SK06 to SK12 SKH4
Auxiliary Contact Blocks (Side mounting)	**SZ-AS1**	Contact arrangement: 1NO+1NC	SK18, SK22, SK32 *3
	SZ-AS1H	Contact arrangement: 1NO+1NC	
Mechanical Interlock Units	**SZ1KRM**	Reversing assembly and mechanical interlock	SK06 to SK12
	SZ-RM		SK18, SK22, SK32
Reversing Connection Kit (wiring)	**SZ1KRW1W**	Reversing Connection Kit for main circuit	SK06 to SK12
	SZ-RW22		Sk18, SK22
	SZ-RW23		SK32
	SZ1KRW1E	Reversing Connection Kit for control circuit	SK06 to SK12
Main Circuit Surge Suppression Unit *2	**SZ-ZM1**	Front mounting Built-in CR (3-phase motor, 240V, 0.1 to 3.7kw)	SK18
	SZ-ZM2	Side mounting Built-in CR (3-phase motor, 240V, 0.1 to 3.7kw)	SK06 to SK12 *2 SK18
	SZ-ZM3E	Front mounting Built-in CR (3-phase motor, 240V, 0.1 to 15kw)	SK18, SK22, SK32
	SZ-ZM4E	Side mounting Built-in CR (3-phase motor, 240V, 0.1 to 15kw)	SK06 to SK12 *2 SK18, SK22, SK32
Separate Installation Unit (for Main Circuit Surge Suppression Unit)	**SZ-ZMH**	For Main Circuit Surge Suppression Unit SZ-ZM2	SZ-ZM2
Coil Surge Suppression Units (surge suppression only)	**SZ1KZ1**	Built-in varistor: 24 to 48V AC	SK06 to SK12 *4 SKH4
	SZ1KZ2	Built-in varistor: 48 to 125V AC	
	SZ1KZ3	Built-in varistor: 100 to 250V AC	
	SZ1KZ6	Built-in diode: 24 to 125V DC	SK06G to SK12G SK06L to SK12L SKH4G, SKH4L *4
	SZ-Z1	Built-in varistor: 24 to 48V AC	SK18, SK22, SK32 *4
	SZ-Z2	Built-in varistor: 100 to 250V AC	
	SZ-Z3	Built-in varistor: 380 to 440V AC	SK18A, SK22, SK32A
	SZ-Z4	Built-in CR: 24 to 48V AC	SK18, SK22, SK32 *4
	SZ-Z5	Built-in CR: 100 to 250V AC	
Coil Surge Suppression Units (with Operation Indicator Lamps)	**SZ1KZ4**	Built-in varistor and LED: 24 to 48V AC/DC	SK06 to SK12 *4 SKH4
	SZ1KZ5	Built-in varistor and LED: 48 to 125V AC/DC	
	SZ-Z6	Built-in varistor and LED: 24 to 48V AC/DC	SK18, SK22, SK32 *4
	SZ-Z7	Built-in varistor and LED: 100 to 240V AC/DC	
	SZ-Z8	Built-in CR and LED: 24 to 48V AC/DC	
	SZ-Z9	Built-in CR and LED: 100 to 240V AC/DC	
Operation Indicator Units	**SZ1KL1**	Built-in LED: 12 to 24V AC/DC	SK06 to SK12 SKH4
	SZ1KL2	Built-in LED: 24 to 48V AC/DC	
	SZ1KL3	Built-in LED: 48 to 125V AC/DC	
Thermal Overload Relay Separate Installation Unit	**TZ1H12N**	For separate installation type thermal overload relay assembly	TK12
	TZ1H26N		TK26
Thermal Overload Relay Reset Releases	**SZ-R1**	Release length: 300mm	TK12, TK25, TK26
	SZ-R2	Release length: 500mm	
	SZ-R3	Release length: 700mm	
Link Module	**BZ0LRK12AA**	Links to Manual Motor Starter	SK06 to SK12
	BZ0LRK22AA		SK18, SK22
	BZ0LRK32AA		SK32
Spaser	**BZ0LRKACA**		SK18A, SK22A, SK32A
Reversing Connection Unit (Insert)	**SZ1KRW1M**	Reversing Connection Unit (Insert) for main circuit	SK06 to SK12

*1 These options cannot be used with 1.2W DC Magnetic Contactors and Starters from SK06 to SK12L and SKH4L Auxiliary Relays.
*2 Use the SZ-ZM2 Main Circuit Surge Suppression Unit together with the SZ-ZMH Standalone Installation Unit.
*3 You can add another auxiliary contact unit when side mounting it.
*4 DC operated SK□G type and SK□L type have a built-in varistor in the main unit.

Auxiliary Contact Blocks

SZ1KA22 SZ1KA11 SZ1FA11

■ Features

- Easily add on auxiliary contacts.
- You can add auxiliary contacts without increasing the footprint to contribute to control panel downsizing.
- Many different contact variations in two external sizes.
- Models with double contacts are available for high reliability to achieve a minimum operating voltage and current of 5V DC, 3mA.

■ Ordering Information (Types)

- Auxiliary Contact Blocks

SZ1KA22
①Type

■ Ordering Information (Types)

Product name	Number of contacts	Contact arrangement	Mounting	Used with	Type
Auxiliary Contact Blocks with Bifurcated Contacts	4	4NO	Front mounting	SK06 to SK12 *1 SKH4 *1	**SZ1KA40**
		3NO+1NC			**SZ1KA31**
		2NO+2NC			**SZ1KA22**
		1NO+3NC			**SZ1KA13**
		4NC			**SZ1KA04**
	2	2NO	Front mounting	SK06 to SK12 SKH4	**SZ1KA20**
		1NO+1NC			**SZ1KA11**
		2NC			**SZ1KA02**
	2	2NO	Front mounting	SK18, 22, 32	**SZ-A20**
		1NO1NC			**SZ-A11**
		2NC			**SZ-A02**
Auxiliary Contact Blocks with Single Contacts	4	4NO	Front mounting	SK06 to SK12 *1 SKH4 *1	**SZ1KA40H**
		3NO+1NC			**SZ1KA31H**
		2NO+2NC			**SZ1KA22H**
		1NO+3NC			**SZ1KA13H**
		4NC			**SZ1KA04H**
	2	2NO	Front mounting	SK06 to SK12 SKH4	**SZ1KA20H**
		1NO+1NC			**SZ1KA11H**
		2NC			**SZ1KA02H**
	2	2NO	Front mounting	SK18, 22, 32	**SZ-A20H**
		1NO1NC			**SZ-A11H**
		2NC			**SZ-A02H**
Small Auxiliary Contact Block with Bifurcated Contacts	2	1NO+1NC	Front mounting	SK06 to SK12 SKH4	**SZ1FA11**
Small Auxiliary Contact Block with Single Contacts	2	1NO+1NC	Front mounting	SK06 to SK12 SKH4	**SZ1FA11H**
Make-before-break Auxiliary Contact (Bifurcated Contact)	2	1NO1NC	Front mounting	SK18, 22, 32	**SZ-A111**
Auxiliary Contact Block (Bifurcated Contact)	2	1NO1NC	Side Mounting	SK18, 22, 32	**SZ-AS1**
Auxiliary Contact Block (Single Contact)	2	1NO1NC	Side Mounting	SK18, 22, 32	**SZ-AS1H**

*1These options cannot be used with 1.2W DC Magnetic Contactors and Starters from SK06 to SK12L and 1.2W SKH4L Auxiliary Relays.

Magnetic-Contactors
SK Series Optional unit

■ Ratings

Type	Conventional free air thermal current (Rated continuous current) [A]	Making and breaking current (AC) [A]	Rated operational current [A]						Minimum voltage and current
			AC			DC			
			Rated operational voltage [V]	Ind. load (AC-15)	Res. load (AC-12)	Rated operational voltage [V]	Ind. load (DC-13)	Res. load (DC-12)	
SZ1KA□ SZ1FA□ (Bifurcated contacts)	10	30	AC100 - 120	3	6	24 DC	2	3	5V DC, 3mA
		30	AC200 - 240	3	6	48 DC	1	2	
		10	AC380 - 440	1	6	110 DC	0.3	1.5	
		5	AC500 - 600	0.5	3	220 DC	0.2	0.5	
SZ1KA□H SZ1FA□H (Single contacts)	10	60	AC100 - 120	6	10	24 DC	4	8	24V DC, 10mA
		60	AC200 - 240	6	10	48 DC	1	3.5	
		60	AC380 - 440	6	10	110 DC	0.5	2.5	
		30	AC500 - 600	3	5	220 DC	0.25	0.8	
SZ-A□ SZ-AS1 (Bifurcated contacts)	10	60	AC100 - 120	6	10	24 DC	3	5	5V DC, 3mA
		30	AC200 - 240	3	8	48 DC	1.5	3	
		15	AC380 - 440	1.5	5	110 DC	0.55	2.5	
		12	AC500 - 600	1.2	5	220 DC	0.27	1	
SZ-A□H SZ-AS1H (Single contacts)	10	60	AC100 - 120	6	10	24 DC	5	10	24V DC, 10mA
			AC200 - 240		10	48 DC	1.5	5	
		40	AC380 - 440	4	10	110 DC	0.7	4	
			AC500 - 600		10	220 DC	0.27	1	

■ Dimensions, mm

- **SZ1KA40**
- **SZ1KA31**
- **SZ1KA22**
- **SZ1KA13**
- **SZ1KA04**
- **SZ1KA40H**
- **SZ1KA31H**
- **SZ1KA22H**
- **SZ1KA13H**
- **SZ1KA04H**

4-pole

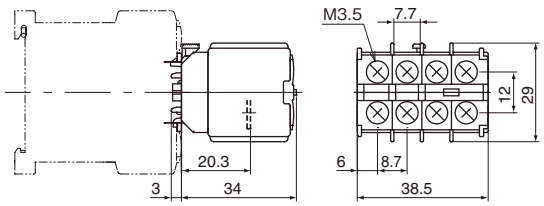

Mass: 34g

Type	Contact arrangement	
SZ1KA40 **SZ1KA40H**	4NO	53 63 73 83 54 64 74 84
SZ1KA31 **SZ1KA31H**	3NO+1NC	53 61 73 83 54 62 74 84
SZ1KA22 **SZ1KA22H**	2NO+2NC	53 61 71 83 54 62 72 84
SZ1KA13 **SZ1KA13H**	1NO+3NC	53 61 71 81 54 62 72 82
SZ1KA04 **SZ1KA04H**	4NC	51 61 71 81 52 62 72 82

- **SZ1KA20**
- **SZ1KA11**
- **SZ1KA02**
- **SZ1KA20H**
- **SZ1KA11H**
- **SZ1KA02H**

2-pole

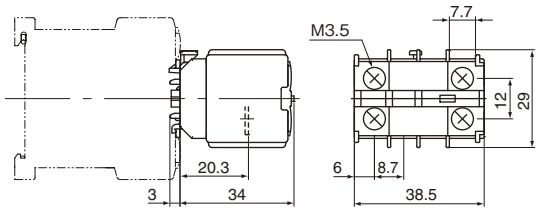

Mass: 29g

Type	Contact arrangement	
SZ1KA20 **SZ1KA20H**	2NO	53 63 54 64
SZ1KA11 **SZ1KA11H**	1NO+1NC	53 61 54 62
SZ1KA02 **SZ1KA02H**	2NC	51 61 52 62

- **SZ1FA11**
- **SZ1FA11H**

Small, 2-pole

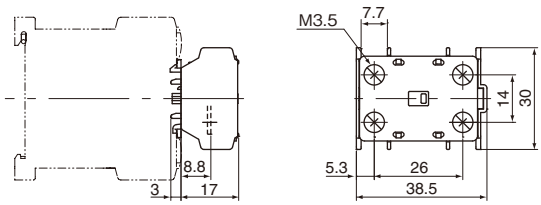

Mass: 17g

Type	Contact arrangement	
SZ1FA11 **SZ1FA11H**	1NO+1NC	53 61 54 62

Fuji Electric FA Components & Systems Co., Ltd.
Information subject to change without notice

■ Dimensions, mm

• Front mounting

• SZ-A20
• SZ-A11
• SZ-A02
• SZ-A111

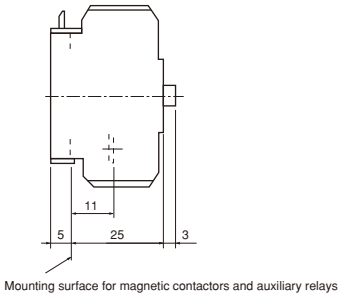

2 poles

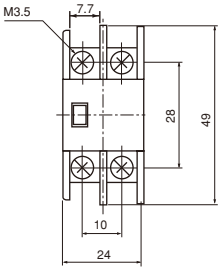

(Note) Auxiliary contact block (4-pole) mounting cannot be performed. Only 2-pole mounting can be performed. It also cannot be used together with a side mounting auxiliary contact block.

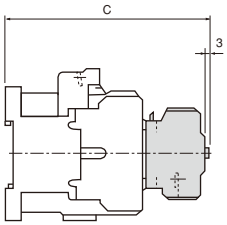

2 poles

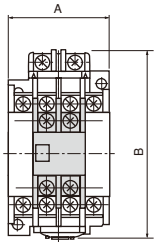

Type	Contact arrangement		Mass [g]
SZ-A20 SZ-A20H	2NO	53 63 54 64	20
SZ-A11 SZ-A11H	1NO1NC	53 61 54 62	20
SZ-A02 SZ-A02H	2NC	51 61 52 62	20
SZ-A111	1NO1NC	57 65 58 66	20

Dimension table

Magnetic contactor coordination type		Dimension [mm]			Mass [kg]
Type	No. of auxiliary contacts (main unit)	A	B	C	
SK18A, 22A	1	45	81	109	0.36
SK18G, 22G	1	45	81	122	0.44
SK32A	1	53	81	109	0.39
SK32G	1	53	81	122	0.5

• Side mounting

• SZ-AS1
• SZ-AS1H

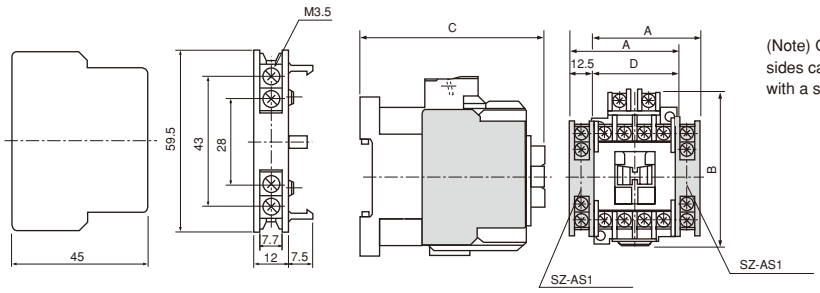

(Note) One can be mounted on one side. Mounting on both sides cannot be performed, and it cannot be used together with a side mounting auxiliary contact block.

Dimension table

Magnetic contactor coordination type		Dimension [mm]				Mass [kg]
Type	No. of auxiliary contacts (main unit)	A	B	C	D	
SK18A, 22A	1	57.5	81	81	45	0.37
SK18G, 22G	1	57.5	81	94	45	0.45
SK32A	1	65.5	81	81	53	0.4
SK32G	1	65.5	81	94	53	0.51

Type	Contact arrangement		Mass [g]
SZ-AS1 SZ-AS1H For left surface mounting	1NO1NC	53 61 54 62	28
SZ-AS1 SZ-AS1H For right surface mounting	1NO1NC	71 83 72 84	28

■ Mounting and removing

[SK06/09/12 models]

● Front mounting type (SZ1KA□ and SZ1FA□)

Mounting

(1) Insert the hook from ① into the mounting groove on the main unit, then move it in direction ②.
(When the hook has caught, a click sound will be heard.)

(2) After mounting, confirm that the auxiliary contact block is fixed firmly in place.

Removing

(1) Press hook ③ on the unit with your finger, then move it in the opposite direction it was mounted in.

SZ1KA□

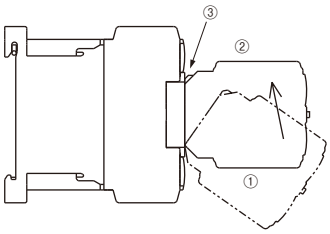

SZ1FA□

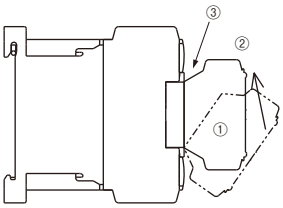

[SK18/22/32 models]

● Front mounting type (SZ-A□)

Mounting

(1) Attach the block unit to the main unit in the direction of ①, and move it in the direction of ② until the hook of the block unit is caught in the mounting groove of the main unit.

(2) After mounting, press the moving section of the block unit to ensure that the block unit moves smoothly.

● Removing

(1) Pull up the hook and move it in the direction of ③.

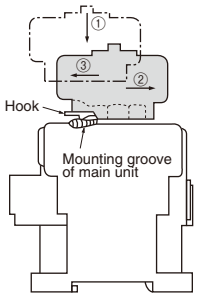

Side mounting type (SZ-AS1)

● Mounting

(1) While pressing the contact support in the direction of ①, insert the moving section (boss) of the block unit into the moving section (dent) of the main unit, and move it in the direction of ②until the hook of the block unit is caught in the mounting groove of the main unit.

(2) After mounting, press the moving section of the main unit to ensure that the block unit moves smoothly.

● Removing

Follow the procedure below to remove the unit from the product.

(1) Insert a tool such as a flathead screwdriver into gap ①, then press the tool in direction ② to release the hook.

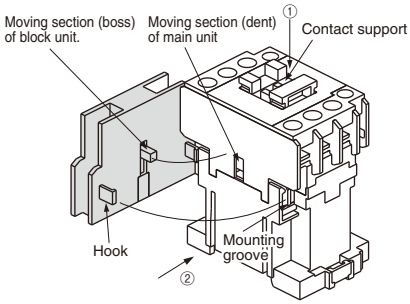

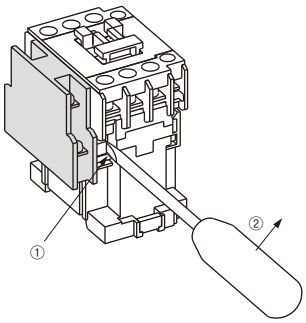

Mechanical Interlock Unit and Power Connection Kit for Reversing

SZ1KRM SZ1KRW1W

■ Features

- Mechanically prevent two Magnetic Contactors from turning ON at the same time.
- Combine a Reversing Connection Kit with an Interlock Unit to easily configure a reversing Magnetic Contactors.
- Mounting two Magnetic Contactors on the front surface reduces the mounting footprint and contributes to downsizing control panels.

■ Types

- Mechanical Interlock Unit: Joins two Magnetic Contactors to mechanically lock them.

Product name	Used with	Type
Mechanical Interlock Unit	SK06, SK09, SK12	**SZ1KRM**
	SK18, SK22, SK32	**SZ-RM**

- Power Connection Kit for Reversing: Used to reverse the circuit wiring between the main circuit terminals.

Product name	Wire size	Number of conductors per set	Used with	Type
Power Connection Kit for Reversing	AWG14 (1.6 dia.)	・One set for power supply side ・One set for load side	SK06, SK09, SK12	**SZ1KRW1W**
		・For power supply side control ・For load side control	SK06, SK09, SK12	**SZ1KRW1E**
		・One set for power supply side ・One set for load side	SK18, SK22	**SZ-RW22**
			SK32	**SZ-RW23**

■ Dimensions, mm

- Mechanical Interlock Unit

·SZ1KRM

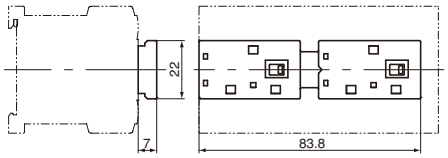

Mass : 11g

·SZ-RM

・Interlock

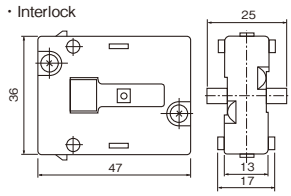

・Joint block

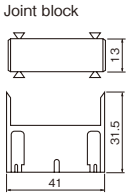

Mass: 25g

(Note 1) The interlock unit is formed from an interlock and a joint block.
(Note 2) Refer to the sections on reversing type magnetic contactors and switches on pages A2-71,72 for dimensions combined with magnetic contactors.

⚠Caution Precaution for Correct Use

・When the Magnetic Contactors are switched rapidly, use an electrically interlock, such as a delay relay, to ensure a switching time of at least 15ms for the contacts of the two Magnetic Contactors.

■ Mounting Procedures

- Interlock Unit: SZ1KRM

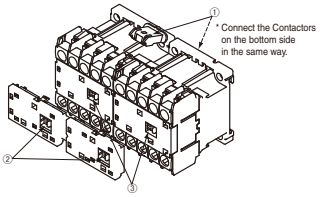

(1) Connect two Magnetic Contactors with the two connection pieces ①.
(2) Move the moveable projections ② on the Interlock Unit to the right side.
(3) Insert the Interlock Unit directly from the top so that it is aligned with the projections ③ on the moveable portion on the Magnetic Contactors.
(4) After you mount the Interlock Unit, slide the projection on the indicator window on the right side and then on the left side to confirm that they move smoothly.

- Interlock Unit: SZ-RM

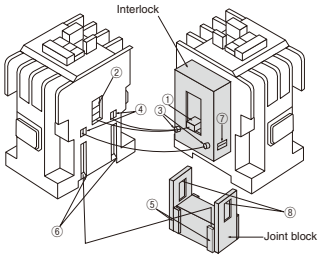

(1) Match the projecting part ① with the movable part of the mechanical interlock unit with the small square opening part ② of the movable part (contact support) of the contactor, and the round boss ③ of the mechanical interlock unit with the recessed part ④ on the side of the contactor. Secure the interlock mechanical interlock unit from both sides through the contactor.
(2) Insert the ribs ⑤ of the joint block into the guides ⑥ of the contactor and fit the window ⑧ of the joint block into the projecting part ⑦ of the mechanical interlock unit.
(3) After connection, push and release the movable parts (contact supports) of the forwarding and reversing contactors one turn at a time to see that they move smoothly.
(4) To remove, use a screwdriver to remove the window ⑧ of the joint block from the projecting part ⑦ of the mechanical interlock unit and remove the joint block.

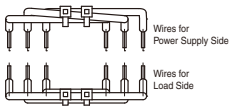

- Power Connection Kit for Reversing

Connect the Kit to the main circuit terminals. There are wires for the power supply side and wires for the load side. Be sure to connect them to the correct sides.

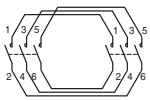

Main Circuit Surge Suppression Unit and Separate Installation Unit

■ Features

- Absorbs the surge voltage that is generated from three-phase motors when the Magnetic Contactor is switched to suppress the effects of surge voltage.
- Combination with a Separate Installation Unit enables both screw mounting and DIN rail mounting. (The SZ-ZM2 Main Circuit Surge Suppression Unit must be used with a Separate Installation Unit to secure it.)

SZ-ZM1

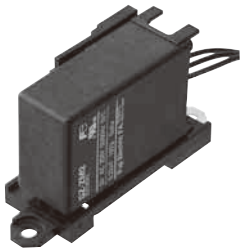

SZ-ZM2 + SZ-ZMH

■ Ratings and Types

Product name	Mounting	Rated voltage and frequency	CR time constant	Applicable 3-phase motor	Applicable model	Type
Main Circuit Surge Suppression Unit	Front mounting	250V AC, 50/60Hz	C=0.22μF R=100Ω	200 to 240V AC 0.1 to 3.7kW	SK18	**SZ-ZM1**
	Side mounting				SK06 to18	**SZ-ZM2**
	Front mounting	250V AC, 50/60Hz	C=0.33μF R=47Ω	200 to 240V AC 0.1 to 15kW	SK18, 22, 32	**SZ-ZM3E**
	Side mounting				SK06 to 32	**SZ-ZM4E**
Separate Installation Unit	Screw mounting DIN rail mounting	–	–	–	SZ-ZM2 SZ-ZM4E	**SZ-ZMH**

❶ Application of the SK Series (SK06/09/12) is possible through combined usage of SZ-ZM2 or SZ-ZM4E and a separate installation unit.
❷ SZ-ZM3E and SZ-ZM4E are for lead tip sleeve use (Ø1.1 mm).

■ Performances

Item		Performance
Dielectric strength	Between terminals	Rated voltage × 230% for 1 min
	Between terminals and Unit outer case	Rated voltage × 2 + 1,000V for 1 min
Insulation resistance	Between terminals	2,000MΩ min.
	Between terminals and Unit outer case	2,000MΩ min. per terminal
Electrostatic capacity tolerance (at 1kHz)		±10%
Durability		1 million operations

■ Main Circuit Surge Suppression Characteristics

(220V AC, 2.2kW motor)

- Without Main Circuit Surge Suppression Unit

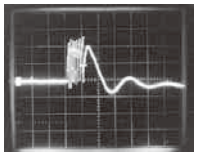

(No.CP-485)

- With Main Circuit Surge Suppression Unit

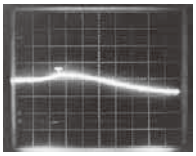

(No.CP-486)

■ Mounting Procedures

- SZ-ZM1, ZM3E

(1) To install, force the unit onto the contactor form the direction of arrow ① and move it in the direction of arrow ②. Check that the pawl of the unit fits into the groove of the contactor.
(2) To remove, raise the pawl of the unit and move the unit in the direction reverse that of installation.
(3) Connect lead wires to Load-side terminals 2, 4 and 6 of the contactor. Lead wires can be connected to any of these terminals. Tighten with tightening torque described in instruction for magnetic contactor.

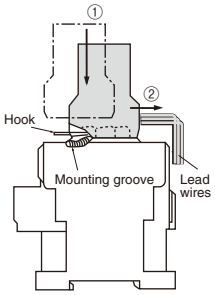

- SZ-ZM2, ZM4E

(1) To install, push the projecting part of the unit into the groove from under the contactor until it stops.
(2) To remove, slide the unit downward.
(3) Connect lead wires to Load-side terminals 2, 4 and 6 of the contactor. Lead wires can be connected to any of these terminals. Tighten with tightening torque described in instruction for magnetic contactor.

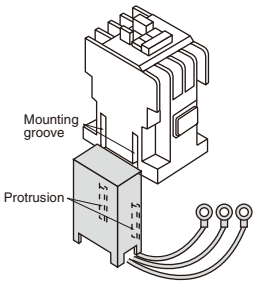

⚠Caution Precaution for Correct Use

・Do not use the Main Circuit Surge Suppression Unit near inverter circuits or in other locations where a large harmonic component is present.

■ Wiring Diagram

・Connection with magnetic starter

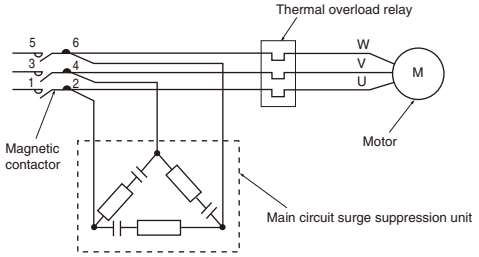

■ Dimensions, mm

● Front mounting (SZ-ZM1, ZM3E)

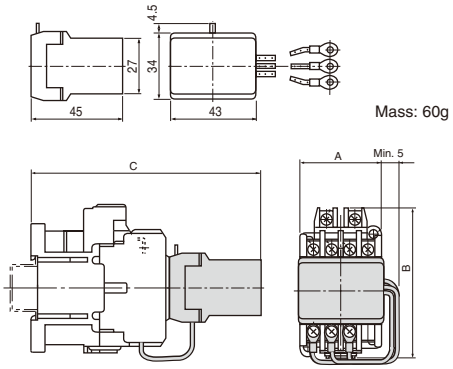

Mass: 60g

Dimension table

Type	Dimension (mm)		
	A	B	C
SK18A + SZ-ZM1	45	81	121
SK18G + SZ-ZM1	45	81	134
SK22A + SZ-ZM3E	45	81	121
SK22G + SZ-ZM3E	45	81	134
SK32A + SZ-ZM3E	53	81	121
SK32G + SZ-ZM3E	53	81	134

(Note) SZ-ZM3E model is for lead tip sleeve use (Ø1.1 mm).

● Side mounting (SZ-ZM2, ZM4)

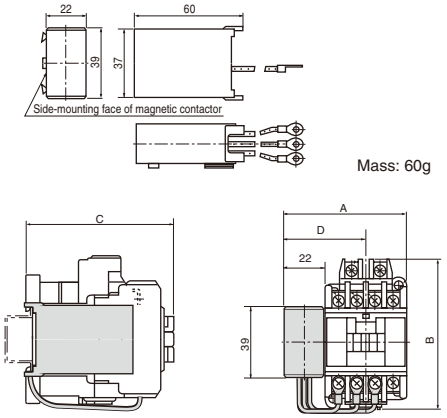

Mass: 60g

Dimension table

Type	Dimension (mm)			
	A	B	C	D
SK18A + SZ-ZM2	67	81	81	44.5
SK18G + SZ-ZM2	67	81	94	44.5
SK22A + SZ-ZM4E	67	81	81	44.5
SK22G + SZ-ZM4E	67	81	94	44.5
SK32A + SZ-ZM4E	75	81	81	44.5
SK32G + SZ-ZM4E	75	81	94	44.5

(Note 1) SZ-ZM4E model is for lead tip sleeve use (Ø1.1 mm).
(Note 2) Side mounting-type main circuit surge suppression units can be mounted to either the left or right side of the magnetic contactor.

● Separate installation unit (SZ-ZMH)

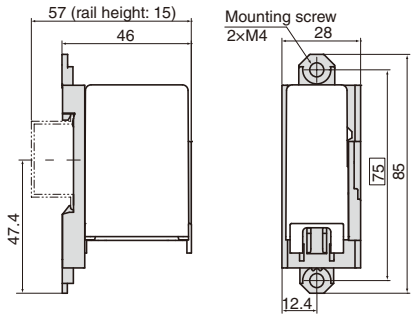

● Mounting

Line up protrusion ① on the side of the main circuit surge suppression unit with the mounting groove on the inner wall of the separate mounting unit, then press hard in the direction of the arrow until a click is heard.

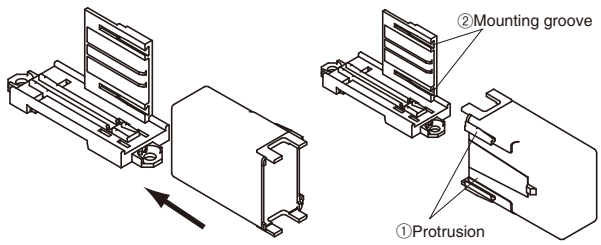

Coil Surge Suppression Units and Operation Indicator Lamps

■ Features

- The Main Circuit Surge Absorber Unit absorbs the surge voltage that is generated when the coil in a Magnetic Contactor turns OFF. This suppresses malfunctioning of electronic circuits.
- The Operation Indicator Unit indicates with an LED when voltage is applied to the coil terminals.

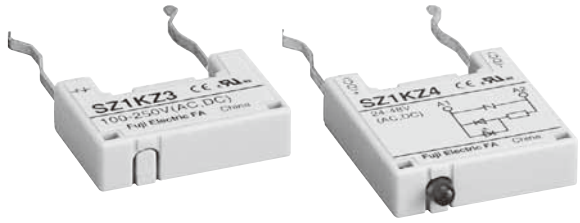

SZ1KZ3 SZ1KZ4

■ Ratings and Types

Product name	Surge suppression element	Specification	Operation indicator lamp	Applicable model		Control circuit voltage		Type
				AC-operated type	DC-operated type	AC	DC	
Coil Surge Suppression Units	Varistor	Varistor voltage: 100V	-	SK06A SK09A SK12A	-	24-48V	Not required. ❶	**SZ1KZ1**
		Varistor voltage: 240V				48-125V		**SZ1KZ2**
		Varistor voltage: 470V				100-250V		**SZ1KZ3**
		Varistor voltage: 100V	LED (red)			24-48V	Not required. ❶	**SZ1KZ4**
		Varistor voltage: 240V				48-125V		**SZ1KZ5**
	Diode	-	-	-	SK06G, L SK09G, L SK12G, L	-	12-125V	**SZ1K26**
Operation Indicator Units	-	-	LED (red)	SK06A SK09A SK12A		12-24V	12-24V	**SZ1KL1**
						24-48V	24-48V	**SZ1KL2**
						48-125V	48-125V	**SZ1KL3**
Coil Surge Suppression Units	Varistor	Varistor voltage: 100V	-	SK18A SK22A SK32A	-	24-48V	Not required ❶	**SZ-Z1**
		Varistor voltage: 470V	-			100-250V		**SZ-Z2**
		Varistor voltage: 910V	-			380-440V	- ❷	**SZ-Z3**
	CR	0.22μF, 22Ω	-		SK18G SK22G SK32G	24-48V	24-48V	**SZ-Z4**
		0.1μF, 220Ω	-			100-250V	100-250V	**SZ-Z5**
	Varistor	Varistor voltage: 100V	LED (red)		-	24-48V	Not required ❶	**SZ-Z6**
		Varistor voltage: 470V	LED (red)			100-250V		**SZ-Z7**
	CR	0.22μF, 22Ω	LED (red)		SK18G SK22G SK32G	24-48V	24-48V	**SZ-Z8**
		0.1μF, 220Ω	LED (red)			100-250V	100-250V	**SZ-Z9**

Note: ❶ A varistor is built into the SK□G and SK□L for DC operation.
Note: ❷ This type of unit is used for AC-operated contactors only.

■ Coil Surge Suppression Characteristics

Product	Application	Characteristics (200V AC coil)
Without Surge Suppression Unit	A sharp surge voltage is generated from the coil due to coil inductance as a result of the rapid change in voltage when the coil turns OFF. This becomes noise to surrounding electronic devices, and can cause malfunctions and circuit destruction.	SK12A 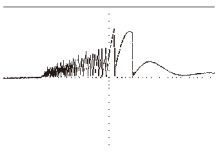 (0.1ms/div, 1kV/div)
Models with varistors built in	When the surge voltage reaches a certain level, current flows to the varistor that is connected in parallel with the coil. This serves to control the peak surge voltage. Varistors can be applied to either AC or DC. The suppressed surge voltage is approximately the varistor voltage.	SK12A + SZ1KZ3 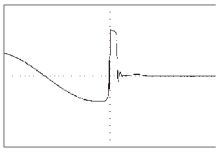 (2ms/div, 200V/div)

Information subject to change without notice

■ Mounting methods

● SZ1KZ1 to 6, SZ1KL1 to 3

(1) Insert the Unit into the mounting holes in the Magnetic Contactor. The Unit must be oriented properly top to bottom. Do not mount the Unit backwards.

· Mounting to Non-reversing Magnetic Contactors

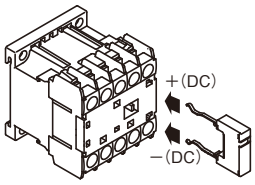

· Mounting to Reversing Magnetic Contactors

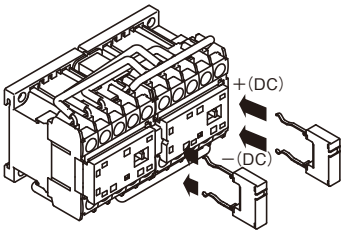

● SZ-Z1 to Z9, SZ-Z31 to Z37, SZ-Z41 to Z45

(1) Insert the terminals on the unit into coil terminals A1 and A2, then press the protrusion for fixing the unit in place into the groove on the magnetic contactor main unit to mount it.
Tighten the unit terminals along with the operating circuit electric wires.

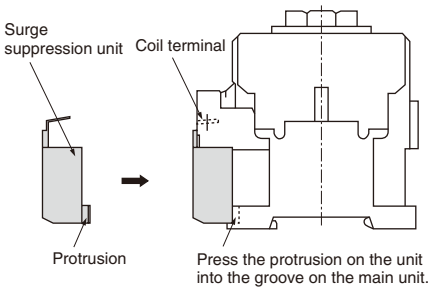

■ Dimensions, mm

● SZ1KZ1 to SZ1KZ3, SZ1KZ6
(Coil Surge Suppression Units)

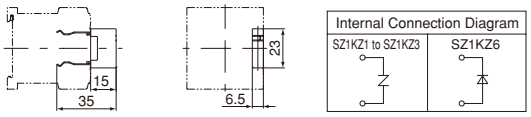

Mass : 3g

● SZ1KZ4 and SZ1KZ5
(Coil Surge Suppression Units with Operation Indicator Lamps)

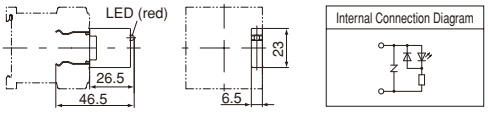

Mass : 4g

● SZ1KL1 to SZ1KL3
(Operation Indicator Units)

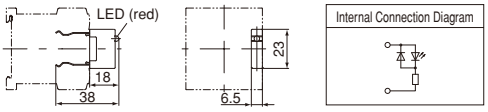

Mass : 2g

● SZ-Z1, Z2, Z3 (Varistor built-in type)
● SZ-Z4, Z5 (CR built-in type)

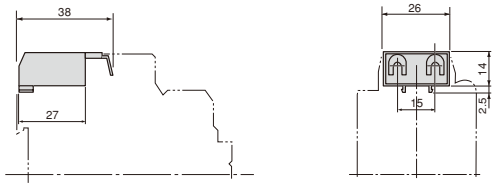

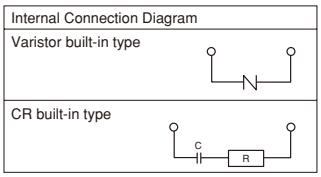

Mass: 14g

● SZ-Z6, Z7 types (varistor built-in type, with LED indicator)
● SZ-Z8, Z9 types (CR built-in type, with LED indicator)

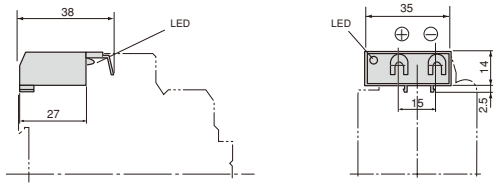

(Note 1) For DC operated units, pay careful attention to the polarity.

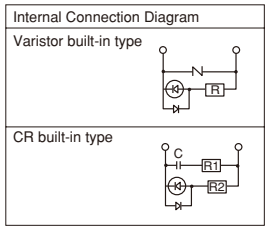

Mass: 16g

A2

Thermal Overload Relay Reset Releases

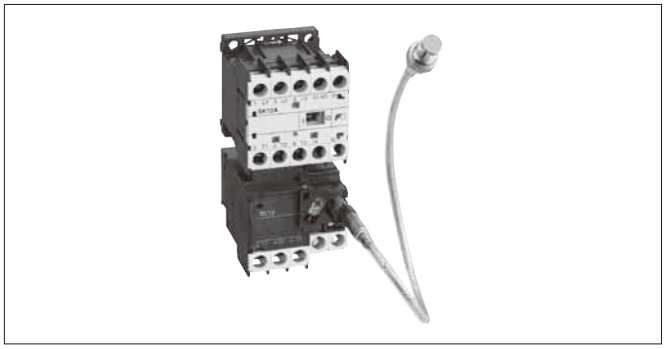

■ Features

- A Reset Release is used to enable resetting a Thermal Relay from the front surface of the panel or from a remote location.

■ Ratings and Types

Product name	Release length [mm]	Mass [g]	Used with 2E Thermal Overload Relay	Type
Thermal Overload Relay Reset Releases	300	30	TK12, TK25 and TK26 (Packaged together with Reset Releases for the TR-0N and 5-1N.)	**SZ-R1**
	500	40		**SZ-R2**
	700	50		**SZ-R3**

■ Mounting Procedure

- SZ-R1, R2, R3

(1) Remove the front cover.
The cover can be easily removed as shown in the figure if you hold the cover near the hinges and pull strongly.

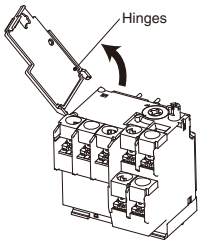

(2) Insert the tab ① on the mounting base into the hole in the Thermal Relay and then latch the tabs ② and ③. To remove the mounting base, use a fine screwdriver to disengage tabs ② and ③.

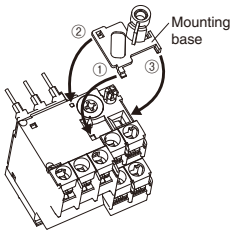

(3) Tighten the male thread ④ on the Release in the female thread ⑤ on the mounting base. Remove the nut ⑥ from the Release, insert the Release through the panel from the back of the panel, and tighten the nut ⑥ from the front of the panel to secure the Release.

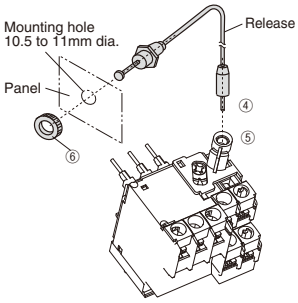

■ Dimensions, mm

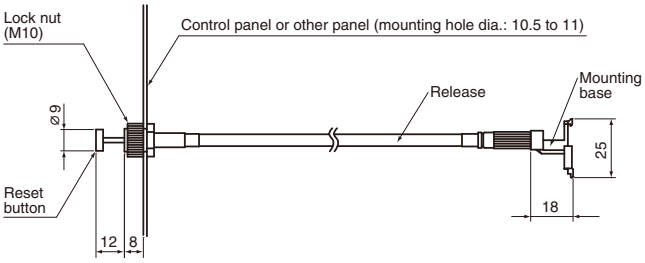

⚠Caution Precaution for Correct Use

- When mounting the Release, do not allow the lead to bend within 25mm from the panel and within 35mm of the mounting base.
- Do not bend the lead of the Release to a radius of less than 15mm. (Refer to the figure on the right.)
- Prepare a mounting hole with a diameter of 10.5 to 11mm.

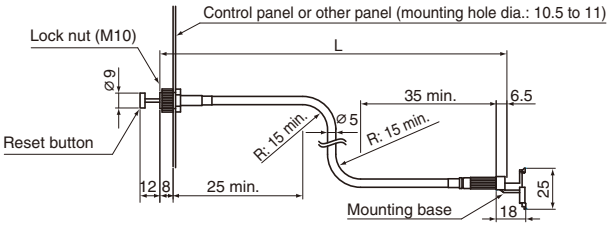

Separate Mounting Unit for Thermal Overload Relay

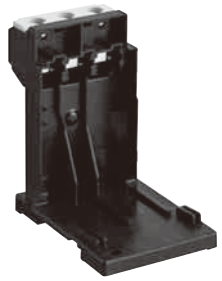

TZ1H26N

■ Features

- By combining this unit with a thermal overload relay for a magnetic starter, it can be used as a thermal overload relay for separate mounting.
- Screw mounting and rail mounting using an IEC top hat type of rail (35 mm width) are available.

■ Ordering Information (Types)

- Separate Mounting Unit for Thermal Overload Relay

TZ1H26N Note: An order can also be made with the product type code.

① Type

■ Types

Product name	Applicable thermal overload relay	Type
Separate Mounting Unit for Thermal Overload Relay	TK12	**TZ1H12N**
	TK26	**TZ1H26N**

■ Mounting Procedure

(1) Fully loosen the terminal screws of the separate mounting unit.
(2) Insert the connecting wires of the thermal overload relay, along the insertion guide of the separate mounting unit (Figure 1).
(3) Press the thermal overload relay in the direction of the arrow, and confirm that the lower section of the thermal overload relay is securely engaged with the hooks (2 locations) of the separate mounting unit (Figure 2).

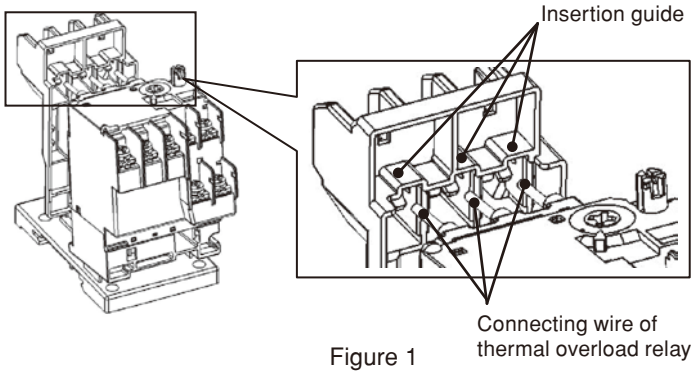

Figure 1

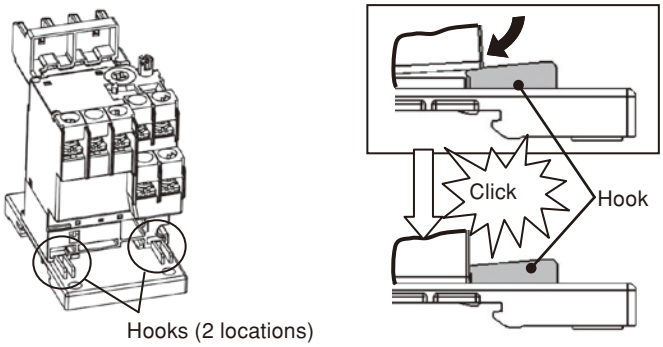

Figure 2

Magnetic-Contactors
SK Series Optional unit

■ Dimensions, mm

●TZ1H12N

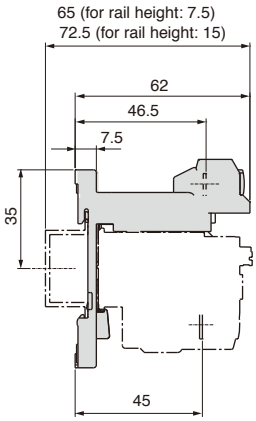

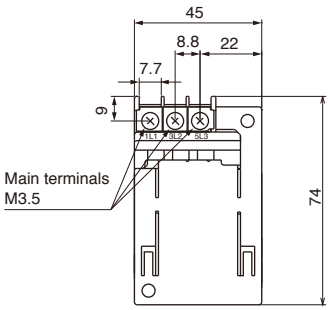

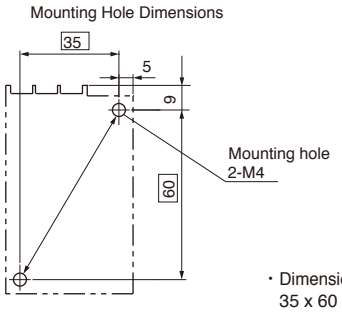

・Dimension for mounting:
35 x 60
・Mounting screw: 2-M4

Mass: 30g

●TZ1H26N

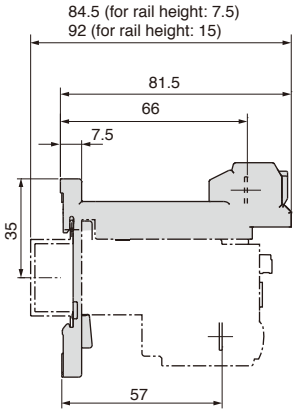

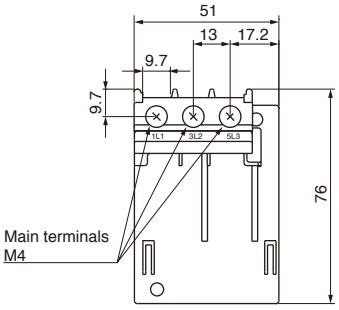

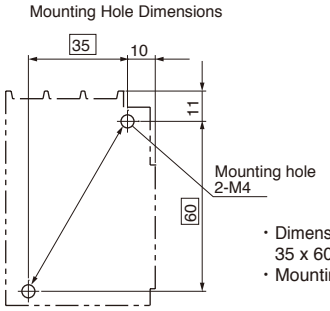

・Dimension for mounting:
35 x 60
・Mounting screw: 2-M4

Mass: 40g

Link Module and Power Connection Kit for Reversing (Insert)

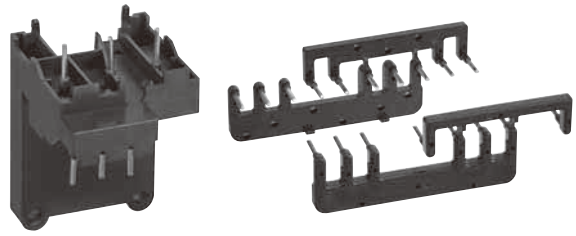

BZ0LRK12AA SZ1KRW1M

■ Features

- Connect a Manual Motor Starter and a Magnetic Contactor directly through a Link Module.
- A Reversing Connection Kit (Insert) for Combination Starters has joined the lineup.

■ Types

● Link Module/Spacer : Electrically and mechanically connects a Manual Motor Starter and Magnetic Contactor.

Link Module	Applicable MMS	Applicable Magnetic Contactors	Type
Link Module (for SK06, SK09, SK12) Photo No. KKD11-101	BM3RSB BM3RHB	SK06, SK09, and SK12	**BZ0LRK12AA**
Link Module (for SK18, SK22) NEW Photo No. KKD15-219	BM3RSB BM3RHB BM3RSR BM3RHR	SK18A, SK18G SK22A, SK22G	**BZ0LRK22AA**
Link Module (for SK32 type) NEW Photo No. KKD15-221		SK32A, SK32G	**BZ0LRK32AA**
Spacer (for SK18A, SK22A, SK32A) NEW Photo No. KKD15-223	-	SK18A SK22A SK32A	**BZ0LRKACA**

● Power Connection Kit for Reversing (Insert): Used to reverse the circuit wiring between the main circuit terminals.

	Wire size	Number of conductors per set	Applicable MMS	Applicable types	Type
Photo No. KKD11-113	1.6 dia.	·One set for power supply side ·One set for load side	BM3RSB BM3RHB	SK06, SK09, and SK12	**SZ1KRW1M**

● Combination Starter Configuration Table

Applicable MMS	Applicable magnetic contactor	Operating coil	Link module	Spacer
BM3RSB BM3RHB BM3RSR BM3RHR	SK06A, SK06G, SK06L SK09A, SK09G, SK09L SK12A, SK12G, SK12L	AC DC	BZ0LRK12AA	–
	SK18A SK22A	AC *1	BZ0LRK22AA	BZ0LRKACA
	SK18G SK22G	DC		–
	SK32A	AC *1	BZ0LRK32AA	BZ0LRKACA
	SK32G	DC		

*1 For an AC coil product (AC-operated type), a spacer is necessary besides a link module.
Note: When combining with SK18, SK22 or SK32 types, you can use only an MMS with the changed slider. When ordering an MMS with the changed slider, please order this item with "NEW" appended to the product type code.

■ Dimensions, mm

● Link Module
BZ0LRK12AA

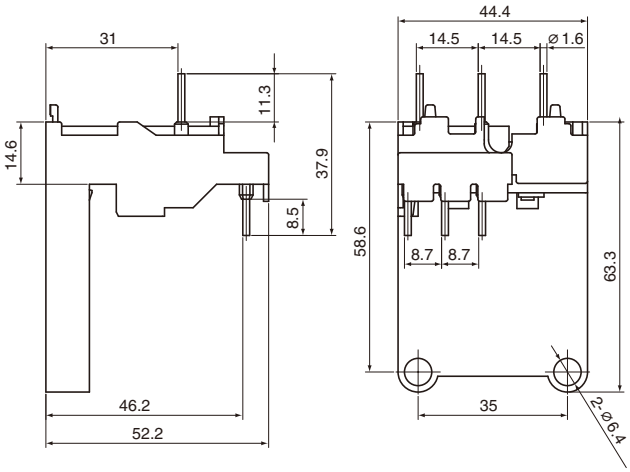

Mass : 25g

● Link Module
BZ0LRK22AA

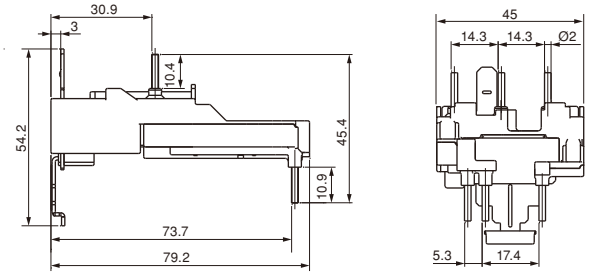

Mass: 35g

● Link Module
BZ0LRK32AA

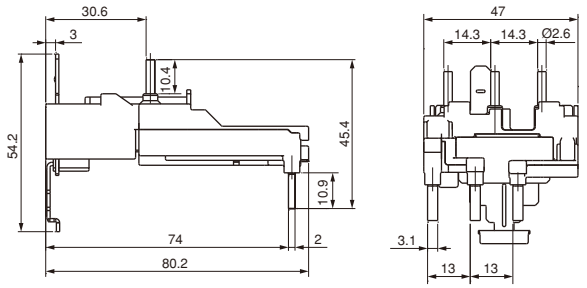

Mass: 41g

● Spacer
BZ0LRKACA

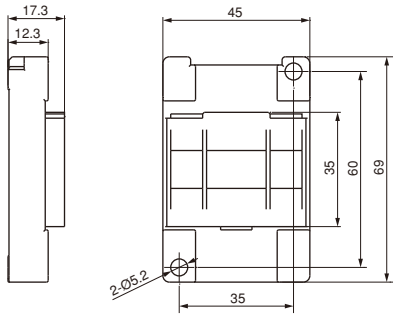

Mass: 20g

● Power Connection Kit for Reversing (Insert)
SZKRW1H

[Insert for Power Supply Side] [Insert for Load Side]

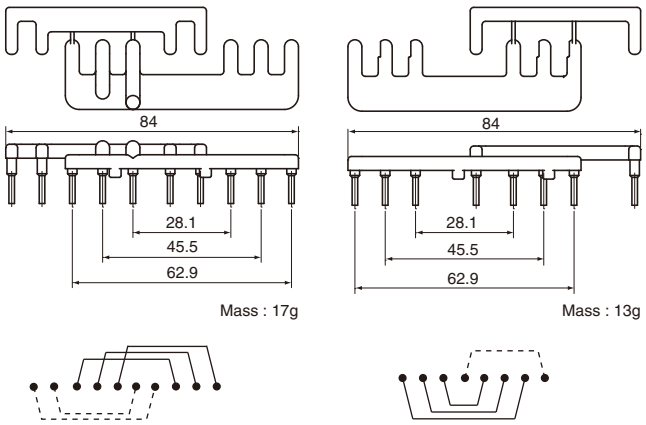

Mass : 17g Mass : 13g

The dotted line indicates wiring for an electrical interlock when the integrated auxiliary contact is 1NC x 2. When the integrated auxiliary contact is 1NO x 2 or when wiring is not necessary, only the main circuit should be used by separating this section.

Information subject to change without notice

■ Features

- International safety standards for standard models (IEC, GB, JIS, UL, and CSA).
- Models available with AC, DC, or low-power DC operating coils.
- Bifurcated contact for more reliable contact for micro-loads of 3mA at 5V DC.
- Models with high-capacity contacts (single button contact) are also available.
- Configure a wide range of contacts in combination with Auxiliary Contact Blocks.

SKH4A

■ Ordering Information (Types)

- Auxiliary Relays

SKH4 A H - E 22
① ② ③ ④ ⑤

①Series ②Operating coil ③Contact specification ④Coil voltage specification ⑤Contact arrengement

■ Ratings

Refer to Auxiliary Contact Ratings on *page A2-43*.

■ Types

Operating coil specification ②	Contact specification ③	Coil voltage specification ④			Contact arrengement ⑤	Type
AC-operated types [A]	Bifurcated contact [blank]	24V [E]	120V [K]	380V [S]	4NO	**SKH4A-□40**
		48V [F]	200V [2]	400V [4]	3NO+1NC	**SKH4A-□31**
		100V [1]	220V [M]	440V [T]	2NO+2NC	**SKH4A-□22**
	Single button contact [H]	110V [H]	240V [P]	500V [5]	4NO	**SKH4AH-□40**
					3NO+1NC	**SKH4AH-□31**
					2NO+2NC	**SKH4AH-□22**
DC-operated types (2.4W) [G]	Bifurcated contact [blank]	12V [B]	100V [1]	210V [Y]	4NO	**SKH4G-□40**
		24V [E]	110V [H]	220V [M]	3NO+1NC	**SKH4G-□31**
		48V [F]	120V [K]		2NO+2NC	**SKH4G-□22**
	Single button contact [H]	60V [G]	200V [2]		4NO	**SKH4GH-□40**
					3NO+1NC	**SKH4GH-□31**
					2NO+2NC	**SKH4GH-□22**
DC-operated types (1.2W) [L]	Bifurcated contact [blank]	12V [B]			4NO	**SKH4L-□40**
		24V [E]			3NO+1NC	**SKH4L-□31**
		48V [F]			2NO+2NC	**SKH4L-□22**
	Single button contact [H]				4NO	**SKH4LH-□40**
					3NO+1NC	**SKH4LH-□31**
					2NO+2NC	**SKH4LH-□22**

Note. "□" in the type column is replaced with the coil voltage code.

Magnetic-Contactors
SK Series Auxiliary Relays

■ Performances

● Durability (Based on IEC 60947-5-1)

Type	Number of contacts	Operating cycles per hour [times/hour]	Mechanical durability	Electrical durability					
				AC-15		AC-12		DC-13	DC-12
				220V	440V	220V	440V	220V	220V
SKH4	4	1800	10 million	500,000	500,000	250,000	250,000	250,000	500,000

■ Combinations with Auxiliary Contact Blocks

SK-Series Auxiliary Relays and Auxiliary Contacts Blocks can be combined as shown in the following table. Other combinations are not possible.

Auxiliary Contact Block / Auxiliary Relay type	Type	SZ1KA40 SZ1KA40H	SZ1KA31 SZ1KA31H	SZ1KA22 SZ1KA22H	SZ1KA13 SZ1KA13H	SZ1KA04 SZ1KA04H	SZ1KA20 SZ1KA20H	SZ1KA11 SZ1KA11H	SZ1KA02 SZ1KA02H	SZ1FA11 SZ1FA11H
	Auxiliary contact arrangement	4NO	3NO+1NC	2NO+2NC	1NO+3NC	4NC	2NO	1NO+1NC	2NC	1NO+1NC
		Combined auxiliary contact arrangement								
SKH4A SKH4AH SKH4G SKH4GH	4NO	8NO	7NO+1NC	6NC+2NC	5NO+3NC	4NO+4NC	6NO	5NO+1NC	4NO+2NC	5NO+1NC
	3NO+1NC	7NO+1NC	6NO+2NC	5NO+3NC	4NO+4NC	3NO+5NC	5NO+1NC	4NO+2NC	3NO+3NC	4NO+2NC
	2NO+2NC	6NO+2NC	5NO+3NC	4NO+4NC	3NO+5NC	2NO+6NC	4NO+2NC	3NO+3NC	2NO+4NC	3NO+3NC
SKH4L SKH4LH	4NO	–	–	–	–	–	6NO	5NO+1NC	4NO+2NC	5NO+1NC
	3NO+1NC	–	–	–	–	–	5NO+1NC	4NO+2NC	3NO+3NC	4NO+2NC
	2NO+2NC	–	–	–	–	–	4NO+4NC	3NO+3NC	2NO+4NC	3NO+3NC

■ Linked Contact Compliance (Compliance with Requirements of IEC60947-5-1 Annex L)

Auxiliary Contact Block / Auxiliary Relay type	No Auxiliary Contact Block	SZ1KA□		SZ1FA11	SZ1KA□H		SZ1FA11H
		4-pole	2-pole		4-pole	2-pole	
SKH4A SKH4AH	○	×	×	×	×	×	×
SKH4G SKH4GH	○	×	×	○	○	○	○
SKH4L SKH4LH	○	–	○	○	–	○	○

○ : Complies.
× : Does not comply.

■ Dimensions, mm

SKH4

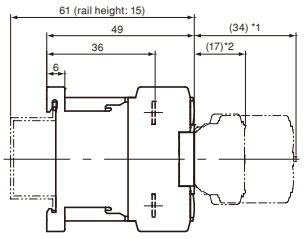

[NOTE]
*1: With SZ1KA□ Auxiliary Contact Blocks.
*2: With SZ1FA□ Auxiliary Contact Blocks.

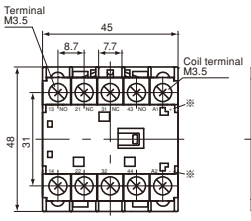

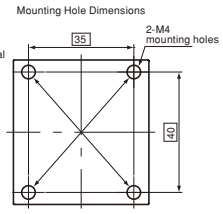

Mounting screws: 2-M4 screws
Mount the Auxiliary Relay
with two mounting holes
in diagonally opposed corners.

Auxiliary contacts	Contact arrangement
4NO	13 23 33 43 A1 (+) ※ / 14 24 34 44 A2 (-) ※
3NO+1NC	13 21 33 43 A1 (+) ※ / 14 22 34 44 A2 (-) ※
2NO+2NC	13 21 31 43 A1 (+) ※ / 14 22 32 44 A2 (-) ※

※For DC-operated types.

Mass : 0.14kg (SKH4A)
0.17kg (SKH4G and SKH4L)

Fuji Electric FA Components & Systems Co., Ltd.
Information subject to change without notice

■ Quick reference guide

Contactor Non-reversing / Reversing	SC-E02 / SC-E02RM	SC-E03 / SC-E03RM	SC-E04 / SC-E04RM	SC-E05 / SC-E05RM	SC-E1 / SC-E1RM
	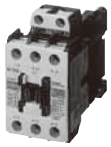 AF01-11	AF01-11	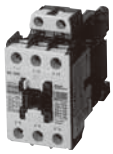 AF01-10	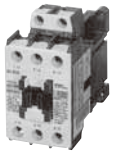 KK01-105	AF01-8
Motor capacity 3-phase AC-3 (kW)					
200–240V	2.2	3	4	5.5	7.5
380–440V	4	5.5	7.5	11	15
Rated operational current AC-3 (A)					
200–240V	9	12	18	25	32
380–440V	9	12	18	25	32
Rated thermal current AC-1 (A)	20	20	25	32	50
Auxiliary contact Non-reversing	–	–	–	–	–
Dimensions (mm) W×H×D AC operated	43×81×81				54×90×96
Non-reversing DC operated	43×81×108				54×90×121.5
Standard	IEC 60947-4-1, EN 60947-4-1, VDE 0660, UL 508, CSA C22.2				
Further information	*Page A2-99*				
Thermal overload relay (standard type)	**TK26E**	**TK26E**	**TK26E**	**TK26E**	**TK-E2**
	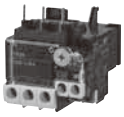 KKD14-114	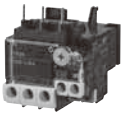 KKD14-114	KKD14-114	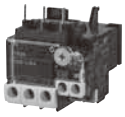 KKD14-114	KK01-88
Ampere setting range (A)	0.1 – 0.15	0.1 – 0.15	0.1 – 0.15	0.1 – 0.15	4 – 6
	0.13 – 0.2	0.13 – 0.2	0.13 – 0.2	0.13 – 0.2	5 – 8
	0.18 – 0.27	0.18 – 0.27	0.18 – 0.27	0.18 – 0.27	6 – 9
	0.24 – 0.36	0.24 – 0.36	0.24 – 0.36	0.24 – 0.36	7 – 11
	0.34 – 0.52	0.34 – 0.52	0.34 – 0.52	0.34 – 0.52	9 – 13
	0.48 – 0.72	0.48 – 0.72	0.48 – 0.72	0.48 – 0.72	12 – 18
	0.64 – 0.96	0.64 – 0.96	0.64 – 0.96	0.64 – 0.96	18 – 26
	0.8 – 1.2	0.8 – 1.2	0.8 – 1.2	0.8 – 1.2	24 – 36
	0.95 – 1.45	0.95 – 1.45	0.95 – 1.45	0.95 – 1.45	
	1.1 – 1.65	1.1 – 1.65	1.1 – 1.65	1.1 – 1.65	
	1.4 – 2.1	1.4 – 2.1	1.4 – 2.1	1.4 – 2.1	
	1.7 – 2.6	1.7 – 2.6	1.7 – 2.6	1.7 – 2.6	
	2.2 – 3.4	2.2 – 3.4	2.2 – 3.4	2.2 – 3.4	
	2.8 – 4.2	2.8 – 4.2	2.8 – 4.2	2.8 – 4.2	
	4 – 6	4 – 6	4 – 6	4 – 6	
	5 – 7.5	5 – 7.5	5 – 7.5	5 – 7.5	
	6 – 9	6 – 9	6 – 9	6 – 9	
	7 – 10.5	7 – 10.5	7 – 10.5	7 – 10.5	
		9 – 13	9 – 13	9 – 13	
			12 – 18	12 – 18	
				16 – 22	
				20 – 26	
Dimensions W×H×D (mm)	53×64.5×63				54×78.5×97
Standard	IEC 60947-1, EN 60947-4-1, VDE 0660, UL 508, CSA C22.2				
Further information	*Page A2-122*				

Magnetic-Contactors
SC-E series General information

Contactors	Non-reversing Reversing	SC-E2 SC-E2RM	SC-E2S SC-E2SRM	SC-E3 SC-E3RM	SC-E4 SC-E4RM	SC-E5 SC-E5RM	SC-E6 SC-E6RM	SC-E7 SC-E7RM
		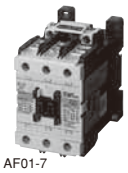 AF01-7	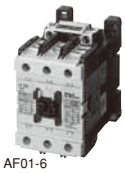 AF01-6	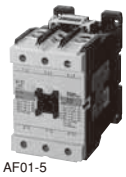 AF01-5	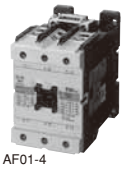 AF01-4	AF01-3	AF01-2	AF01-1
Motor capacity 3-phase AC-3 (kW)								
200–240V		11	15	18.5	22	30	37	45
380–440V		18.5	22	30	40	55	60	75
Rated operational current AC-3 (A)								
200–240V		40	50	68	80	105	125	150
380–440V		40	50	65	80	105	125	150
Rated thermal current AC-1 (A)		60	65	100	105	150	150	200
Auxiliary contact Non-reversing		–	–	–	–	2NO+2NC	2NO+2NC	2NO+2NC
Dimensions (mm) W×H×D	AC operated	54×90×96		67×112×111		88×155×132	100×169×138	115×175×140
Non-reversing	DC operated	54×90×121.5		67×112×130				
Standard		IEC 60947-4-1, EN 60947-4-1, VDE 0660, UL 508, CSA C22.2						
Further information		*Page A2-99*						

Thermal overload relay (standard type)	**TK-E2**	**TK-E2**	**TK-E3**	**TK-E3**	**TK-E5**	**TK-E6**	**TK-E6**
	KK01-88	KK01-88	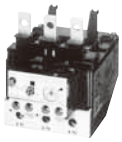 KK01-87	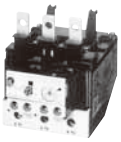 KK01-87	KK01-85	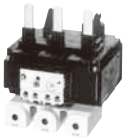 KK01-84	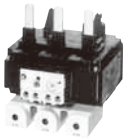 KK01-84
Ampere setting range (A)	4 – 6	4 – 6	7 – 11	7 – 11	18 – 26	45 – 65	45 – 65
	5 – 8	5 – 8	9 – 13	9 – 13	24 – 36	53 – 80	53 – 80
	6 – 9	6 – 9	12 – 18	12 – 18	28 – 40	65 – 95	65 – 95
	7 – 11	7 – 11	18 – 26	18 – 26	34 – 50	85 – 125	85 – 125
	9 – 13	9 – 13	24 – 36	24 – 36	45 – 65		110 – 160
	12 – 18	12 – 18	28 – 40	28 – 40	65 – 95		
	18 – 26	18 – 26	34 – 50	34 – 50	85 – 105		
	24 – 36	24 – 36	45 – 65	45 – 65			
	32 – 42	32 – 42	48 – 68	48 – 68			
		40 – 50		64 – 80			
		44 – 54					
Dimensions W×H×D (mm)	54×78.5×97		68×89.5×107.5		76.5×105×106	100×122×123	
Standard	IEC 60947-1, EN 60947-4-1, VDE 0660, UL 508, CSA C22.2						
Further information	*Page A2-122*						

SC-E series magnetic contactors/non-reversing

■ Features

- Models SC-E02 to SC-E4 have 3-pole main circuits and come in three sizes with widths of 43mm (up to 25A), 54mm (up to 50A), and 67mm (up to 80A).
- Models SC-E1 to SC-E7 employ a box type terminal that allows wires to be connected directly to the main circuit.
- Equipped with a finger-protection terminal structure (IP20) that prevents accidental finger touch to live parts.
- Models SC-E5 to SC-E7 use a SUPER MAGNET (AC/DC-input/DC-operate) to achieve high operating reliability.

■ Standards

IEC 60947-4-1, EN 60947-4-1, VDE 0660, JIS C 8201-4-1
UL 508, CSA C22.2

■ Type number nomenclature

SC-E02 P / G

Operating coil voltage
Blank: AC operated (E02 to E4)
AC/DC operated (E5 to E7)
G: DC operated (E02 to E4)

Wiring
Blank: Straight wiring connection
P: Ring terminal connection

Frame size
02 to E7

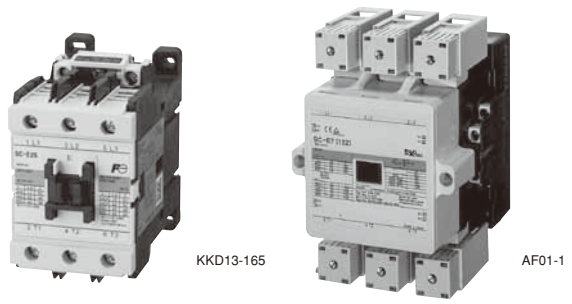

SC-E2S **SC-E7**

■ Ordering information

Specify the following:
1. Type number
2. Operating coil order voltage (*See page A2-104*)

■ Accessories

A full range of accessories with the emphasis on utility.

Contactors: SC-E series
Thermal overload relays: TK-E series

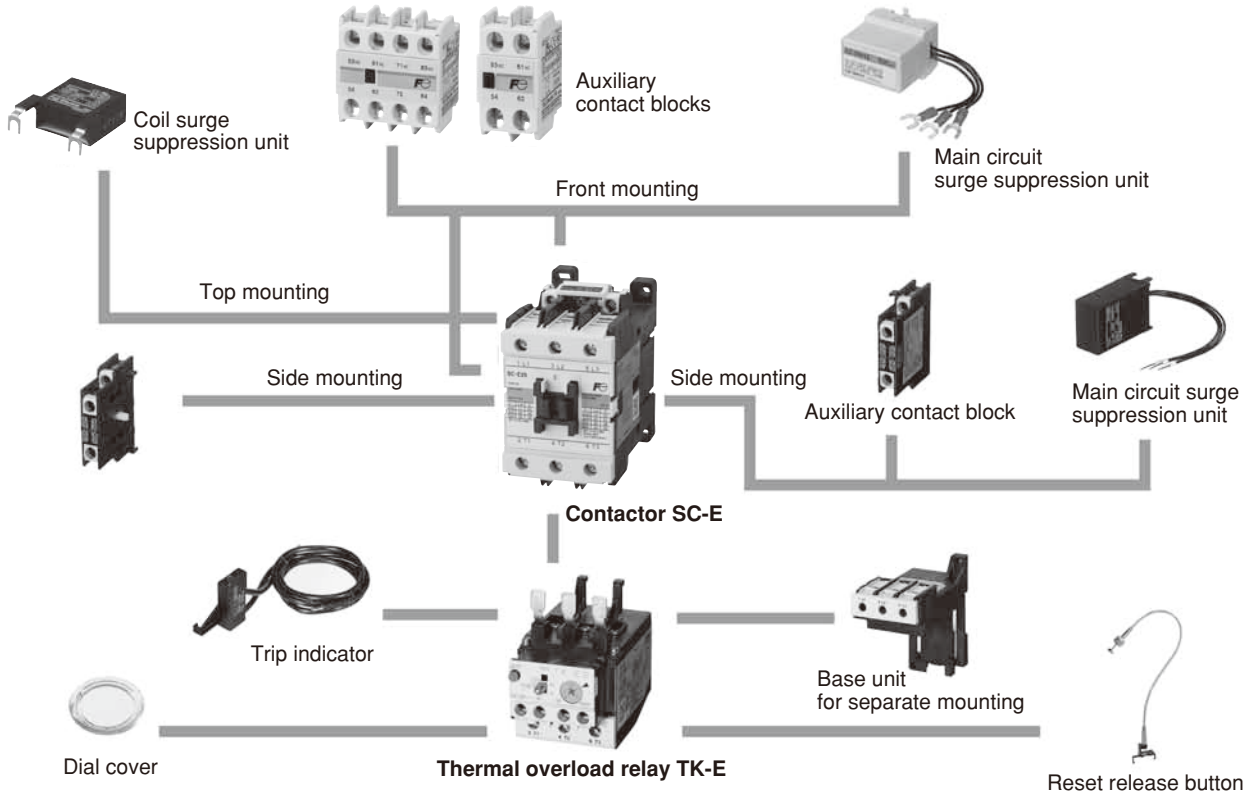

Magnetic-Contactors
SC-E series

■ Types and ratings

Operating coil	Max. motor capacity (kW)				Rated operating current (A)						Rated thermal current (A)	Aux. contact Arrangement	Contactor type
	3-phase AC-3				3-phase AC-3				Resistive load AC-1				
	200–240V	380–440V	500–550V	600–690V	200–240V	380–440V	500–550V	600–690V	200–240V	380–440V			
AC operated	2.2	4	4	4	9	9	7	5	20	20	20	–	**SC-E02**
	3	5.5	5.5	5.5	12	12	9	7	20	20	20	–	**SC-E03**
	4	7.5	7.5	7.5	18	18	13	9	25	25	25	–	**SC-E04**
	5.5	11	11	7.5	25	25	17	9	32	32	32	–	**SC-E05**
	7.5	15	15	11	32	32	24	15	50	50	50	–	**SC-E1**
	11	18.5	18.5	15	40	40	29	19	60	60	60	–	**SC-E2**
	15	22	25	22	50	50	38	26	65	65	65	–	**SC-E2S**
	18.5	30	37	30	68	65	60	38	100	100	100	–	**SC-E3**
	22	40	37	37	80	80	60	44	105	105	105	–	**SC-E4**
AC/DC operated	30	55	55	55	105	105	85	64	150	150	150	2NO+2NC	**SC-E5**
	37	60	60	60	125	125	90	72	150	150	150	2NO+2NC	**SC-E6**
	45	75	75	90	150	150	120	103	200	200	200	2NO+2NC	**SC-E7**
DC operated	2.2	4	4	4	9	9	7	5	20	20	20	–	**SC-E02/G**
	3	5.5	5.5	5.5	12	12	9	7	20	20	20	–	**SC-E03/G**
	4	7.5	7.5	7.5	18	18	13	9	25	25	25	–	**SC-E04/G**
	5.5	11	11	7.5	25	25	17	9	32	32	32	–	**SC-E05/G**
	7.5	15	15	11	32	32	24	15	50	50	50	–	**SC-E1/G**
	11	18.5	18.5	15	40	40	29	19	60	60	60	–	**SC-E2/G**
	15	22	25	22	50	50	38	26	65	65	65	–	**SC-E2S/G**
	18.5	30	37	30	68	65	60	38	100	100	100	–	**SC-E3/G**
	22	40	37	37	80	80	60	44	105	105	105	–	**SC-E4/G**

Note :Ratings conform to IEC 60947-4-1

■ Performance data

Frame size	Making current (A)		Breaking current (A)		Operating cycles	Durability (operations)	
	220V	440V	220V	440V	per hour	Electrical	Mechanical
SC-E02	108	108	90	90	1800	2 million	10 million
SC-E03	144	144	120	120	1800	1.5 million	10 million
SC-E04	216	216	180	180	1800	1.5 million	10 million
SC-E05	250	250	200	200	1200	1.5 million	10 million
SC-E1	384	384	320	320	1200	1.5 million	10 million
SC-E2	480	480	400	400	1200	1.5 million	10 million
SC-E2S	500	500	400	400	1200	1.5 million	10 million
SC-E3	816	780	680	650	1200	1.5 million	5 million
SC-E4	816	800	680	650	1200	1 million	5 million
SC-E5	1260	1260	1050	1050	1200	1 million	5 million
SC-E6	1500	1500	1250	1250	1200	1 million	5 million
SC-E7	1800	1800	1500	1500	1200	1 million	5 million

SC-E series magnetic contactors/reversing

■ Features

- Ideal for the forward-reverse operation of 3-phase motors or plugging stops.
- Mechanical interlock
- Snap-on mounting to 35mm-wide top hat rail (DIN). (E02 to E4)

■ Type number nomenclature

SC-E2RM/G

Operating coil voltage
Blank: AC operated (E02 to E4)
AC/DC operated (E5 to E7)
G: DC operated (E02 to E4)

Frame size
02 to E7

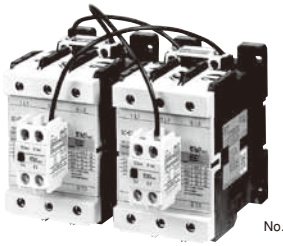

No. KK03-040

SC-E3RM

■ Ordering information

Specify the following:
1. Type number
2. Operating coil order voltage (*See page A2-104*)
3. Auxiliary contact arrangement

Types and ratings

Operating coil	Max. motor capacity (kW)				Rated operating current (A)						Rated thermal current (A)	Aux. Contact Arrangement	Contactor type
	3-phase AC-3				3-phase AC-3				Resistive load AC-1				
	200–240V	380–440V	500–550V	600–690V	200–240V	380–440V	500–550V	600–690V	200–240V	380–440V			
AC operated	2.2	4	4	4	9	9	7	5	20	20	20	(1NO+1NC) x 2, 2NC x 2 (3NO+1NC) x 2, (2NO+2NC) x 2	**SC-E02RM**[*1]
	3	5.5	5.5	5.5	12	12	9	7	20	20	20	(1NO+1NC) x 2, 2NC x 2 (3NO+1NC) x 2, (2NO+2NC) x 2	**SC-E03RM**[*1]
	4	7.5	7.5	7.5	18	18	13	9	25	25	25	(1NO+1NC) x 2, 2NC x 2 (3NO+1NC) x 2, (2NO+2NC) x 2	**SC-E04RM**[*1]
	5.5	11	11	7.5	25	25	17	9	32	32	32	(1NO+1NC) x 2, 2NC x 2 (3NO+1NC) x 2, (2NO+2NC) x 2	**SC-E05RM**[*1]
	7.5	15	15	11	32	32	24	15	50	50	50	(1NO+1NC) x 2, 2NC x 2 (3NO+1NC) x 2, (2NO+2NC) x 2	**SC-E1RM**[*1]
	11	18.5	18.5	15	40	40	29	19	60	60	60	(1NO+1NC) x 2, 2NC x 2 (3NO+1NC) x 2, (2NO+2NC) x 2	**SC-E2RM**[*1]
	15	22	25	22	50	50	38	26	65	65	65	(1NO+1NC) x 2, 2NC x 2 (3NO+1NC) x 2, (2NO+2NC) x 2	**SC-E2SRM**[*1]
	18.5	30	37	30	68	65	60	38	100	100	100	(1NO+1NC) x 2, 2NC x 2 (3NO+1NC) x 2, (2NO+2NC) x 2	**SC-E3RM**[*1]
	22	40	37	37	80	80	60	44	105	105	105	(1NO+1NC) x 2, 2NC x 2 (3NO+1NC) x 2, (2NO+2NC) x 2	**SC-E4RM**[*1]
AC/DC operated	30	55	55	55	105	105	85	64	150	150	150	(2NO+2NC) × 2	**SC-E5RM**
	37	60	60	60	125	125	90	72	150	150	150	(2NO+2NC) × 2	**SC-E6RM**
	45	75	75	90	150	150	120	103	200	200	200	(2NO+2NC) × 2	**SC-E7RM**

Notes: • Ratings conform to IEC 60947-4-1
*1 The above types are shipped in a set containing two magnetic contactors, one SZ-RM mechanical interlock unit, two front mounting auxiliary contact blocks, and electrical interlock wiring. The power connection kit for the reversing contactor is sold separately.
• To prevent short-circuit faults when using SC-E02R to SC-E04RM types for high-speed switching, provide a time delay relay or other electrical interlock to ensure that the switching time is 15ms min.
• For combined use with an MMS, instead of ordering a reversing type, order and assemble the individual components (two magnetic contactors, one SZ-RM mechanical interlock unit, two auxiliary contact blocks, and the power connection kit (SZ-ERW□/A, SZ-ERW□/B).
*1 Equipped with the SZ-A11/T, SZ-A02/T, SZ-A31/T, or SZ-A22/T front mounting auxiliary contact block.

• For motor starter use, order the power connection kit and thermal overload relay.

Type	TOR
SC-E02RM to SC-E05RM	TK-E02
SC-E1RM to SC-E2SRM	TK-E2
SC-E3RM to SC-E4RM	TK-E3
SC-E5RM to SC-E7RM	TK-E6H

Magnetic-Contactors
SC-E series

■ Types and ratings

Operating coil	Max. motor capacity (kW)				Rated operating current (A)						Rated thermal current (A)	Aux. Contact Arrangement	Contactor type
	3-phase AC-3				3-phase AC-3				Resistive load AC-1				
	200–240V	380–440V	500–550V	600–690V	200–240V	380–440V	500–550V	600–690V	200–240V	380–440V			
DC operated	2.2	4	4	4	9	9	7	5	20	20	20	(1NO+1NC) x 2, 2NC x 2 (3NO+1NC) x 2, (2NO+2NC) x 2	**SC-E02RM/G**[*1]
	3	5.5	5.5	5.5	12	12	9	7	20	20	20	(1NO+1NC) x 2, 2NC x 2 (3NO+1NC) x 2, (2NO+2NC) x 2	**SC-E03RM/G**[*1]
	4	7.5	7.5	7.5	18	18	13	9	25	25	25	(1NO+1NC) x 2, 2NC x 2 (3NO+1NC) x 2, (2NO+2NC) x 2	**SC-E04RM/G**[*1]
	5.5	11	11	7.5	25	25	17	9	32	32	32	(1NO+1NC) x 2, 2NC x 2 (3NO+1NC) x 2, (2NO+2NC) x 2	**SC-E05RM/G**[*1]
	7.5	15	15	11	32	32	24	15	50	50	50	(1NO+1NC) x 2, 2NC x 2 (3NO+1NC) x 2, (2NO+2NC) x 2	**SC-E1RM/G**[*1]
	11	18.5	18.5	15	40	40	29	19	60	60	60	(1NO+1NC) x 2, 2NC x 2 (3NO+1NC) x 2, (2NO+2NC) x 2	**SC-E2RM/G**[*1]
	15	22	25	22	50	50	38	26	65	65	65	(1NO+1NC) x 2, 2NC x 2 (3NO+1NC) x 2, (2NO+2NC) x 2	**SC-E2SRM/G**[*1]
	18.5	30	37	30	68	65	60	38	100	100	100	(1NO+1NC) x 2, 2NC x 2 (3NO+1NC) x 2, (2NO+2NC) x 2	**SC-E3RM/G**[*1]
	22	40	37	37	80	80	60	44	105	105	105	(1NO+1NC) x 2, 2NC x 2 (3NO+1NC) x 2, (2NO+2NC) x 2	**SC-E4RM/G**[*1]

Notes: • Ratings conform to IEC 60947-4-1
[*1] The above types are shipped in a set containing two magnetic contactors, one SZ-RM mechanical interlock unit, two front mounting auxiliary contact blocks, and electrical interlock wiring. The power connection kit for the reversing contactor is sold separately.
• To prevent short-circuit faults when using SC-E02R/G to SC-E04RM/G types for high-speed switching, provide a time delay relay or other electrical interlock to ensure that the switching time is 15ms min.
• For combined use with an MMS, instead of ordering a reversing type, order and assemble the individual components (two magnetic contactors, one SZ-RM mechanical interlock unit, two auxiliary contact blocks, and the power connection kit (SZ-ERW□/A, SZ-ERW□/B).
[*1] Equipped with the SZ-A11/T, SZ-A02/T, SZ-A31/T, or SZ-A22/T front mounting auxiliary contact block.

• For motor starter use, order the power connection kit and thermal overload relay.

Type	TOR
SC-E02RM/G to SC-E05RM/G	TK-E02
SC-E1RM/G to SC-E2SRM/G	TK-E2
SC-E3RM/G to SC-E4RM/G	TK-E3
SC-E5RM/G to SC-E7RM/G	TK-E6H

■ Performance data

Frame size	Making current (A)		Breaking current (A)		Operating cycles	Durability (operations)	
	220V	440V	220V	440V	per hour	Electrical	Mechanical
SC-E02	108	108	90	90	1800	2 million	10 million
SC-E03	144	144	120	120	1800	1.5 million	10 million
SC-E04	216	216	180	180	1800	1.5 million	10 million
SC-E05	250	250	200	200	1200	1.5 million	10 million
SC-E1	384	384	320	320	1200	1.5 million	10 million
SC-E2	480	480	400	400	1200	1.5 million	10 million
SC-E2S	500	500	400	400	1200	1.5 million	10 million
SC-E3	816	780	680	650	1200	1.5 million	5 million
SC-E4	816	800	680	650	1200	1 million	5 million
SC-E5	1260	1260	1050	1050	1200	1 million	5 million
SC-E6	1500	1500	1250	1250	1200	1 million	5 million
SC-E7	1800	1800	1500	1500	1200	1 million	5 million

SC-E series contactors, ring terminal connection types

■ Features

- The new type allows wiring with ring crimp terminals in addition to the conventional straight wiring connection.
  Types SC-E02P to SC-E2SP also enable straight wiring connection.
- A new slide-type terminal cover is easy to mount and remove. Up to two ring crimp terminals can be connected from the upper terminal part.
- Three module designs with widths of 43mm (up to 25A), 54mm (up to 50A), and 67mm (up to 80A) provide an ideal combination with manual motor starters for ring terminal connection.
- UL, CSA (cUL) approval is pending.

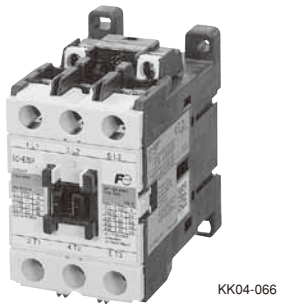

SC-E2SP

■ Types and rings

• Magnetic contactors

Operating coil	Max. motor capacity (kW)		Rated operational current (A)				Rated thermal current (A)	Aux. contact arrangement	Type
	3-phase AC-3		3-phase AC-3		3-phaseAC-1				
	200V 240V	380V 440V	200V 240V	380V 440V	200V 240V	380V 440V			
AC operated	2.2	4	9	9	20	20	20	–	**SC-E02P**
	3	5.5	12	12	20	20	20	–	**SC-E03P**
	4	7.5	18	18	25	25	25	–	**SC-E04P**
	5.5	11	25	25	32	32	32	–	**SC-E05P**
	7.5	15	32	32	50	50	50	–	**SC-E1P**
	11	18.5	40	40	60	60	60	–	**SC-E2P**
	15	22	50	50	65	65	65	–	**SC-E2SP**
	18.5	30	68	65	100	100	100	–	**SC-E3P**
	22	40	80	80	105	105	105	–	**SC-E4P**
DC operated	2.2	4	9	9	20	20	20	–	**SC-E02P/G**
	3	5.5	12	12	20	20	20	–	**SC-E03P/G**
	4	7.5	18	18	25	25	25	–	**SC-E04P/G**
	5.5	11	25	25	32	32	32	–	**SC-E05P/G**
	7.5	15	32	32	50	50	50	–	**SC-E1P/G**
	11	18.5	40	40	60	60	60	–	**SC-E2P/G**
	15	22	50	50	65	65	65	–	**SC-E2SP/G**
	18.5	30	68	65	100	100	100	–	**SC-E3P/G**
	22	40	80	80	105	105	105	–	**SC-E4P/G**

• Thermal overload relays

Applicable contactor Non-reversing	Type	Auxiliary contact arrangement	Trip category (JIS) Resistive load AC-1	No. of heater elements
SC-E02P, E02P/G SC-E03P, E03P/G SC-E04P, E04P/G SC-E05P, E05P/G	**TK26E**	1NO+1NC	10A	3
SC-E1P, E1P/G SC-E2P, E2P/G SC-E2SP, E2SP/G	**TK-N2/T**	1NO+1NC	10A	3
SC-E3P, E3P/G SC-E4P, E4P/G	**TK-N3/T**	1NO+1NC	10A	3

• **Coil characteristics:** *See page A2-104*
• **dimensions:** *See page A2-109*

Magnetic-Contactors
SC-E series

■ Operating coil

• AC coil, SC-E02 to SC-E4

Order voltage	Coil operating voltage and frequency
AC24V	24V AC 50Hz / 24–26V AC 60Hz
AC48V	48V AC 50Hz / 48–52V AC 60Hz
AC100V	100V AC 50Hz / 100–110V AC 60Hz
AC110V	100–110V AC 50Hz / 110–120V AC 60Hz
AC120V	110–120V AC 50Hz / 120–130V AC 60Hz
AC200V	200V AC 50Hz / 200–220V AC 60Hz
AC220V	200–220V AC 50Hz / 220–240V AC 60Hz
AC240V	220–240V AC 50Hz / 240–260V AC 60Hz
AC380V	346–380V AC 50Hz / 380–420V AC 60Hz
AC400V	380–400V AC 50Hz / 400–440V AC 60Hz
AC440V	415–440V AC 50Hz / 440–480V AC 60Hz
AC500V	480–500V AC 50Hz / 500–550V AC 60Hz

Note: Other voltages are available in 24 to 600V AC on request.

• DC coil, SC-E02/G to SC-E4/G

Order voltage	Coil operating voltage
DC12V	12V DC
DC24V	24V DC
DC48V	48V DC
DC60V	60V DC
DC100V	100V DC
DC110V	110V DC
DC120V	120V DC
DC200V	200V DC
DC210V	210V DC
DC220V	220V DC

Note: Other voltages are available in 12 to 250V DC on request.

• AC/DC coil (SUPER MAGNET), SC-E5 to SC-E7

Order voltage	Coil operating voltage and frequency
24V	24–25V AC 50/60Hz, 24V DC
48V	48–50V AC 50/60Hz, 48V DC
100V	100–127V AC 50/60Hz, 100–120V DC *1
200V	200–250V AC 50/60Hz, 200–240V DC *2
400V	380–450V AC 50/60Hz
500V	460–575V AC 50/60Hz

Notes: • Other voltages are available in 24 to 575V AC (24 to 240V DC) on request.
*1 The coil voltage from DC power supply with single-phase full-wave rectification will be 100–110V.
*2 The coil voltage from DC power supply with single-phase full-wave rectification will be 200–220V.

■ Coil characteristics

• AC operated

Frame size	Power consumption (VA)		Power loss (W)		Pick-up voltage (V)		Drop-out voltage (V)		Operating time (ms)	
	Inrush 200V 50Hz	Sealed 200V 50Hz	200V 50Hz	220V 60Hz	200V 50Hz	220V 60Hz	200V 50Hz	220V 60Hz	Coil ON → Contact ON	Coil OFF → Contact OFF
E02 to E05	90	9	2.7	2.8	105–136	116–146	75–106	88–120	9–20	5–16
E1 to E2S	120	12.7	3.6	3.8	110–130	120–140	75–105	85–115	10–17	6–13
E3, E4	180	13.3	4.5	5	115–135	130–150	85–110	100–125	10–18	8–18
E5	80	4	3.2	3.6	140–150	140–150	60–100	60–100	39–45	27–33
E6, E7	190	4.9	3.4	3.7	140–150	140–150	60–100	60–100	31–37	30–36

• DC operated

Frame size	Power consumption (W)		Time constant (ms)	Pick-up voltage (V)	Drop-out voltage (V)	Operating time (ms)	
	Inrush 200V	Sealed 200V	Sealed	200V DC	200V DC	Coil ON → Contact ON	Coil OFF → Contact OFF
E02/G to E05/G	7	7	50	92–130	30–60	45–49	10–26
E1/G to E2S/G	9	9	60	80–120	30–70	40–50	8–17
E3/G, E4/G	12	12	70	80–120	24–60	60–70	14–21
E5	90	2.8	1	140–160	40–100	35–41	26–32
E6, E7	225	3.2	1	140–160	40–100	28–34	27–33

■ Auxiliary contact ratings

Based on IEC 60974-4-1, EN 60947-4-1, JIS C 8201-4-1

Frame size	Rated insulation voltage (V)	Rated thermal current (A)	Making and breaking capacity at AC (A)		Rated operational current (A) AC Voltage	AC-15 Ind. load	DC Voltage	DC-13 Ind. load	Minimum operating voltage and current
E02 to E4 E02/G to E4/G	–	–	–		–		–		–
E5 to E7	690	10	120V	60	120V	6	24V	3	5V DC, 3mA
			220V	30	220V	3	48V	1.5	
			440V	15	440V	1.5	110V	0.55	
			600V	12	600V	1.2	220V	0.27	

■ Types and ratings for UL and CSA

Operating coil	Rated insulation voltage (V)	Max. motor capacity (Hp) 3-phase motor 200V	220–240V	400–480V	550–600V	Rated operating current (A) 3-phase motor 200V	220–240V	400–480V	550–600V	Rated thermal current (A)	Type
AC operated	600	2	2	5	5	7.8	6.8	7.6	6.1	20	**SC-E02**
		3	3	7.5	7.5	11	9.6	11	9	20	**SC-E03**
		5	5	10	10	17.5	15.2	14	11	25	**SC-E04**
		5	7.5	15	15	17.5	22	21	17	32	**SC-E05**
		7.5	10	25	25	25.3	28	34	27	50	**SC-E1**
		10	15	30	30	32.2	42	40	32	60	**SC-E2**
		15	20	30	30	48.3	54	40	32	65	**SC-E2S**
		20	25	50	50	62.1	68	65	52	100	**SC-E3**
		25	30	50	50	78.2	80	65	52	105	**SC-E4**
AC/DC operated	600	30	30	60	75	92	80	77	77	150	**SC-E5**
		40	40	75	100	119.6	104	96	99	150	**SC-E6**
		50	50	100	125	149.5	130	124	125	200	**SC-E7**
DC operated	600	2	2	5	5	7.8	6.8	7.6	6.1	20	**SC-E02/G**
		3	3	7.5	7.5	11	9.6	11	9	20	**SC-E03/G**
		5	5	10	10	17.5	15.2	14	11	25	**SC-E04/G**
		5	7.5	15	15	17.5	22	21	17	32	**SC-E05/G**
		7.5	10	25	25	25.3	28	34	27	50	**SC-E1/G**
		10	15	30	30	32.2	42	40	32	60	**SC-E2/G**
		15	20	30	30	48.3	54	40	32	65	**SC-E2S/G**
		20	25	50	50	62.1	68	65	52	100	**SC-E3/G**
		25	30	50	50	78.2	80	65	52	105	**SC-E4/G**

■ Auxiliary contact ratings for UL and CSA

Frame size	Rated insulation voltage (V)	Rated thermal current (A)	Making and breaking current (A) AC (rating code A600) Voltage	Making	Breaking	DC (rating code Q300) Voltage	Making	Breaking
E02 to E4 E02/G to E4/G	–	–	–	–	–	–	–	–
E5 to E7	600	10	120V	60	6	125V	0.55	0.55
			240V	30	3	250V	0.27	0.27
			480V	15	1.5			
			600V	12	1.2			

Magnetic-Contactors
SC-E series

■ Electrical durability

• AC-3 duty / SC-E02 to SC-E05

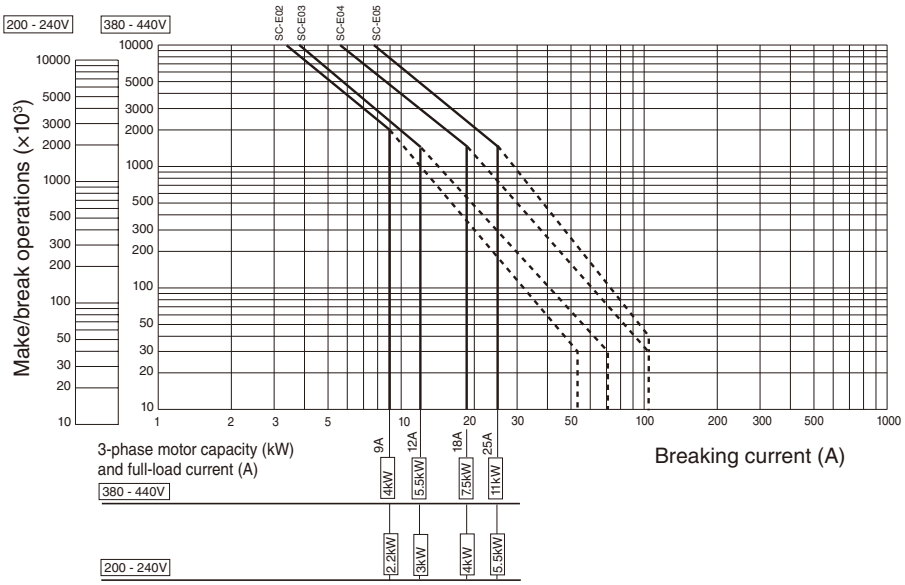

• AC-3 duty / SC-E1 to SC-E7

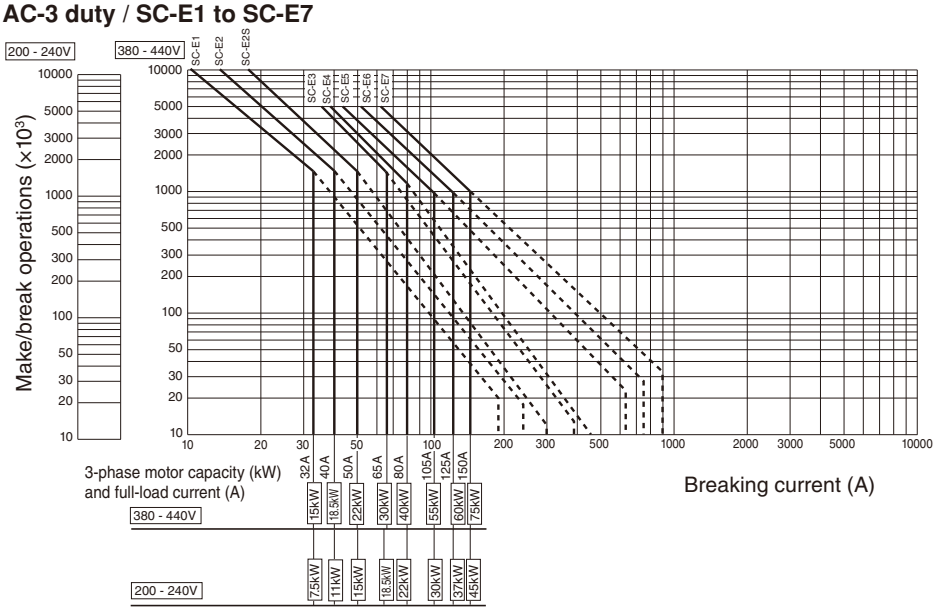

• AC-1 duty / SC-E02 to SC-E7

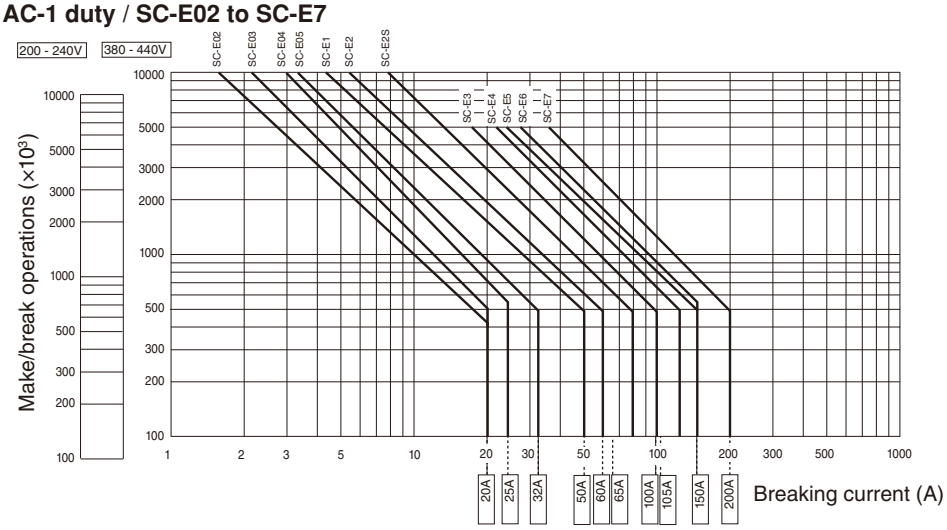

Fuji Electric FA Components & Systems Co., Ltd.
Information subject to change without notice

■ Optional accessories

• Auxiliary contact blocks with terminal covers

The front mounting auxiliary contact block allows two or four auxiliary contacts to be added without increasing the mounting area of the magnetic contactors. The side mounting auxiliary contact block allows two auxiliary contacts to be added to the magnetic contactors without increasing the depth.

Applicable contactor	Mounting	No. of contacts	Contact arrangement	Type
SC-E02 to E4	Front mounting	4	4NO	**SZ-A40/T**
			3NO+1NC	**SZ-A31/T**
			2NO+2NC	**SZ-A22/T**
		2	2NO	**SZ-A20/T**
			1NO+1NC	**SZ-A11/T**
			2NC	**SZ-A02/T**
SC-E02 to E4	Side mounting	2	1NO+1NC	**SZ-AS1/T**
SC-E5, E6, E7		2	1NO+1NC	**SZ-AS2/T**

Front mounting

KKD13-186
SZ-A22/T

KKD13-185
SZ-A11/T

Side mounting

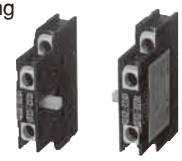
SZ-AS1/T
SZ-AS2/T
KK01-090

Auxiliary contact blocks
Contact ratings

• Based on IEC and JIS

Rated thermal current (A)	Making and breaking capacity at AC (A)		Rated operational current (A) AC Voltage	AC-15 Ind. load	DC Voltage	DC-13 Ind. load	Minimum operating voltage and current
10	120V	60	120V	6	24V	3	5V DC
	220V	30	220V	3	48V	1.5	3mA
	440V	15	440V	1.5	110V	0.55	
	600V	12	600V	1.2	220V	0.27	

• Based on UL and CSA

Rated thermal current (A)	Making and breaking current (A) AC (rating code A600) Volts	Making	Breaking	DC(rating code Q300) Volts	Making	Breaking
10	120V	60	6	125V	0.55	0.55
	240V	30	3	250V	0.27	0.27
	480V	15	1.5			
	600V	12	1.2			

• Main circuit surge suppression units

When contactor is energized or de-energized, a surge voltage is generated from motor circuit. This unit suppresses this surge voltage and protects electronic equipment from malfunction or damage.

Applicable contactor	Mounting	Rated voltage and frequency	CR constant	Applicable 3-phase motor	Type
SC-E02 to E05	Front mounting	250V AC	C=0.22μF	200–240V AC	**SZ-ZM1E**
	Side mounting	50/60Hz	R=100	0.1–5.5kW	**SZ-ZM2E**
SC-E1 to E4	Front mounting	250V AC	C=0.33μF	200–240V AC	**SZ-ZM3E**
	Side mounting	50/60Hz	R=47	0.1–22kW	**SZ-ZM4E**

• Coil surge suppression units

This unit suppresses surge voltage due to contactor ON-OFF operations, and can be easily connected to contactor coil terminals.

Applicable contactor AC operated	DC operated	Operating coil voltage	Device	Operation indicator	Type
SC-E02 to E05	SC-E02/G to E05/G	24–48V AC/DC	Varistor	–	**SZ-Z1**
		100–250V AC/DC		–	**SZ-Z2**
	–	380–440V AC		–	**SZ-Z3**
SC-E02 to E05	SC-E02/G to E05/G	24–48V AC/DC		Red LED	**SZ-Z6**
		100–250V AC/DC		Red LED	**SZ-Z7**
SC-E1 to E4	SC-E1/G to E4/G	24–48V AC/DC		–	**SZ-Z31**
		100–250V AC/DC		–	**SZ-Z32**
	–	380–440V AC		–	**SZ-Z33**
SC-E02 to E05	SC-E02/G to E05/G	24–48V AC/DC	CR	–	**SZ-Z4**
		100–250V AC/DC		–	**SZ-Z5**
SC-E02 to E05	SC-E02/G to E05/G	24–48V AC/DC		Red LED	**SZ-Z8**
		100–250V AC/DC		Red LED	**SZ-Z9**
SC-E1 to E4	–	24–48V AC		–	**SZ-Z34**
		100–250V AC		–	**SZ-Z35**
–	SC-E1/G to E4/G	24–48V DC		–	**SZ-Z36**
		100–250V DC		–	**SZ-Z37**

Main circuit surge suppression units

KK02-077
Front mounting
SZ-ZM1E

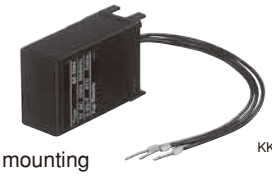
KK02-079
Side mounting
SZ-ZM4E

Coil surge suppression unit

Top mounting
CR
SZ-Z4
KKD06-021

Magnetic-Contactors
SC-E series Optional accessories

• Mechanical interlock unit

The mechanical interlock unit provides a mechanical interlock with assembly parts to convert a magnetic contactor into a reversing magnetic contactor.

Applicable contactor	Type
SC-E02 to E4 SC-E02/G to E4/G	**SZ-RM**

AF99-47 KK03-047 KK03-048

SZ-RM | **SZ-ERW1/A + SZ-ERW1/B** | **SZ-ERW3/A + SZ-ERW3/B**

• Power connection kit for reversing (For direct connection)

Applicable contactor	Power connection kit for reversing					
	Contactor separately fig 1		Combination using thermaloverload relay fig 2		Combination using MMS fig 3	
	Line side ⓐ	Load side ⓑ	Line side ⓒ	Load side ⓓ	Line side ⓔ	Load side ⓕ
SC-E02RM,SC-E02RM/G	SZ-ERW1/A	SZ-ERW1/B	SZ-ERW1/A	SZ-ERW1/D	SZ-ERW1/A	SZ-ERW1/B
SC-E03RM,SC-E03RM/G						
SC-E04RM,SC-E04RM/G						
SC-E05RM,SC-E05RM/G						
SC-E1RM,SC-E1RM/G	SZ-ERW2/A	SZ-ERW2/B	SZ-ERW2/A	SZ-ERW2/D	SZ-ERW2/A	SZ-ERW2/B
SC-E2RM,SC-E2RM/G						
SC-E2SRM,SC-E2SRM/G						
SC-E3RM,SC-E3RM/G	SZ-ERW3/A	SZ-ERW3/B	SZ-ERW3/A	SZ-ERW3/D	SZ-ERW3/A	SZ-ERW3/B
SC-E4RM,SC-E4RM/G					–	–
SC-E5RM	SZ-ERW4/A	SZ-ERW4/B	–	–	–	–
SC-E6RM	SZ-ERW5/A	SZ-ERW5/B	–	–	–	–
SC-E7RM	SZ-ERW6/A	SZ-ERW6/B	–	–	–	–

• Power connection kit for reversing (For direct connection)

Applicable contactor	Power connection kit for reversing					
	Contactor separately fig 1		Combination using thermaloverload relay fig 2		Combination using MMS fig 3	
	Line side ⓐ	Load side ⓑ	Line side ⓒ	Load side ⓓ	Line side ⓔ	Load side ⓕ
SC-E02PRM,SC-E02PRM/G	**SZ-EPRW1/C**	**SZ-EPRW1/D**	**SZ-EPRW1/C**	**SZ-EPRW1/D**	**SZ-ERW1/A**	**SZ-EPRW1/D**
SC-E03PRM,SC-E03PRM/G						
SC-E04PRM,SC-E04PRM/G						
SC-E05PRM,SC-E05PRM/G						
SC-E1PRM,SC-E1PRM/G	**SZ-EPRW2/C**	**SZ-EPRW2/D**	**SZ-EPRW2/C**	**SZ-EPRW2/D**	–	–
SC-E2PRM,SC-E2PRM/G						
SC-E2SPRM,SC-E2SPRM/G						
SC-E3PRM,SC-E3PRM/G	**SZ-EPRW3/C**	**SZ-EPRW3/D**	**SZ-EPRW3/C**	**SZ-EPRW3/D**	–	–
SC-E4PRM,SC-E4PRM/G						

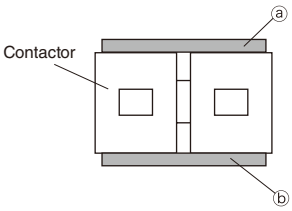

fig 1

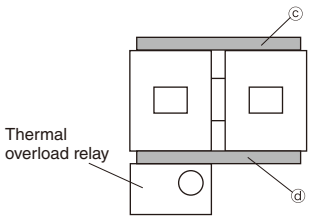

fig 2

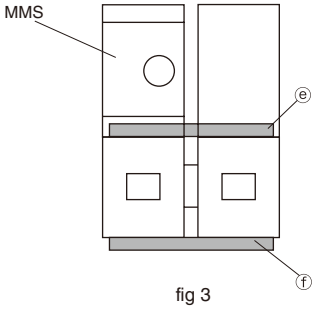

fig 3

Information subject to change without notice

■ Dimensions, mm

• Non-reversing/AC operated
SC-E02, E03, E04, E05

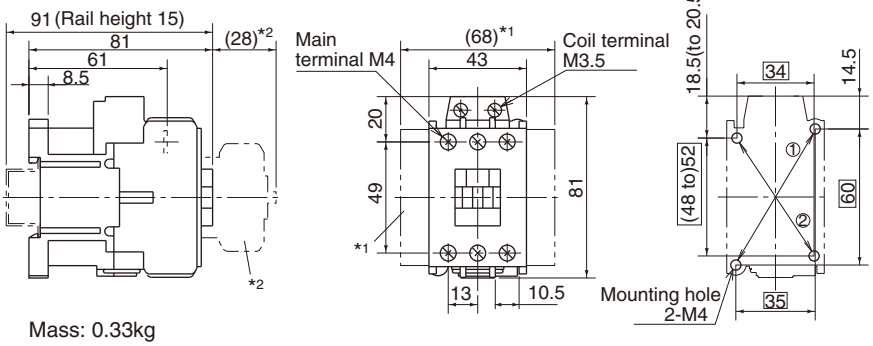

Mass: 0.33kg

■ Wiring diagrams

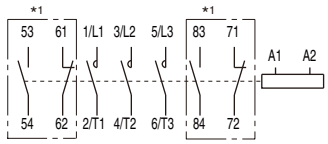

*1 In case of aux. contact 2NO+2NC

Use the two mounting holes on a diagonal line
① or ② to mount contactor
①: 35 × 60 ②: 34 × (48 to) 52

SC-E1, E2, E2S

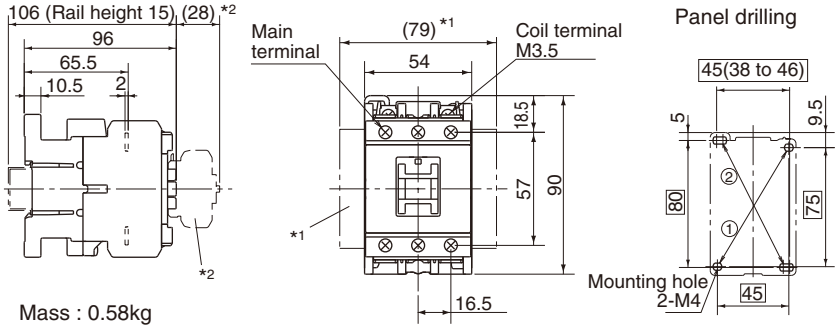

Mass : 0.58kg

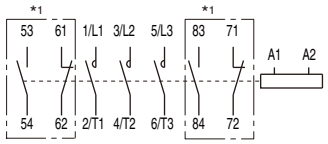

*1 In case of aux. contact 2NO+2NC

Use the two mounting holes on a diagonal line
① or ② to mount contactor
①: 45×75 ②: 45 (38 to 46)×80

SC-E3, E4

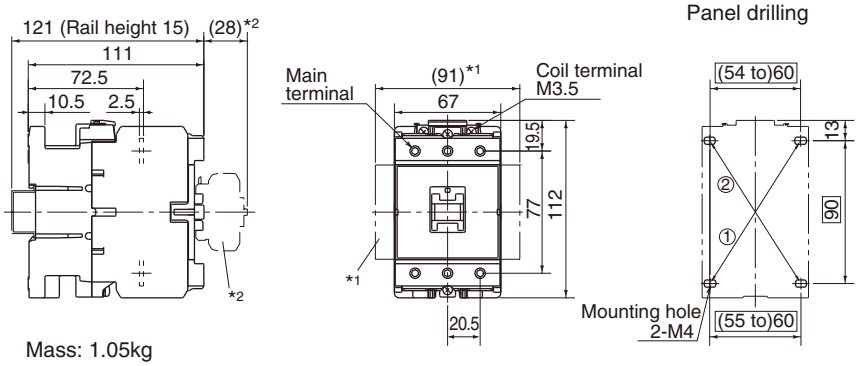

Mass: 1.05kg

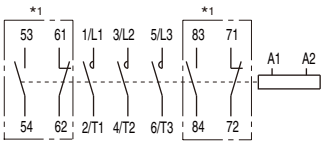

*1 In case of aux. contact 2NO+2NC

Use the two mounting holes on a diagonal line
① or ② to mount contactor
①: (55 to) 60 × 90 ②: (54 to) 60 × 90

SC-E5

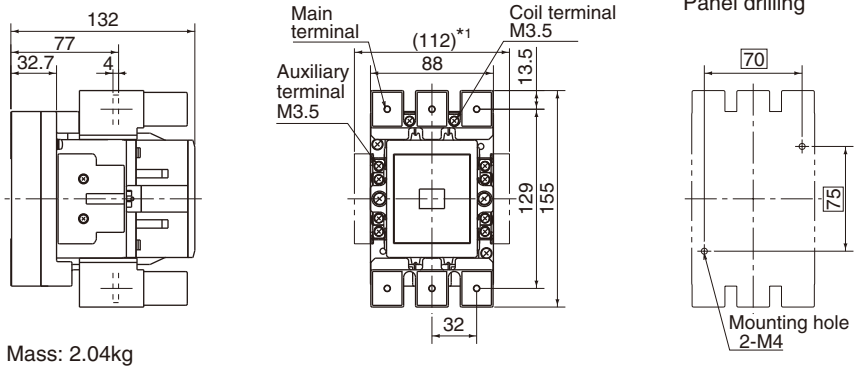

Mass: 2.04kg

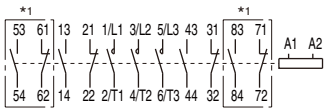

*1 In case of aux. contact 4NO+4NC

*1 Side mounting aux. contact block
*2 Front mounting aux. contact block

Magnetic-Contactors
SC-E series Dimensions

■ Dimensions, mm

• Non-reversing/AC operated

SC-E6

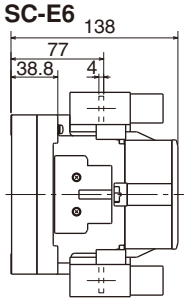

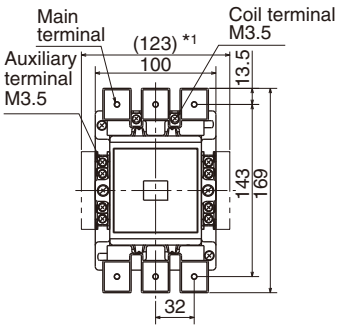

Panel drilling

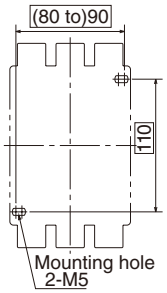

Mass: 2.55kg

■ Wiring diagrams

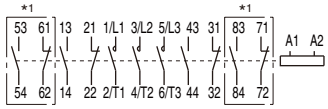

*1 In case of aux. contact 4NO+4NC

SC-E7

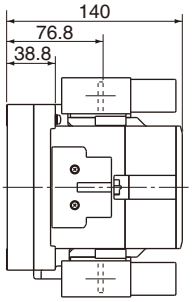

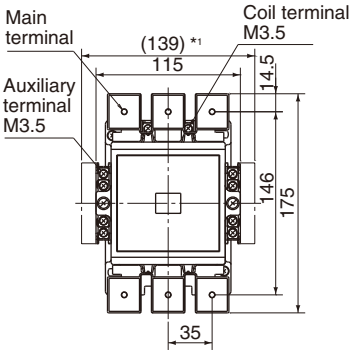

Panel drilling

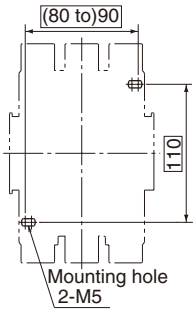

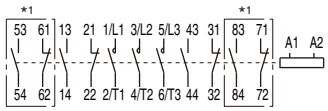

*1 In case of aux. contact 4NO+4NC

Mass: 2.86kg

• Non-reversing/DC operated

SC-E02/G, E03/G, E04/G, E05/G

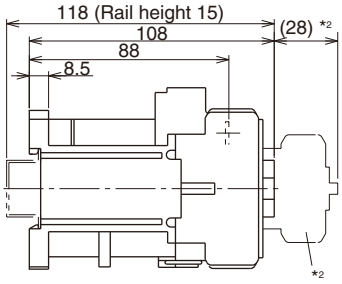

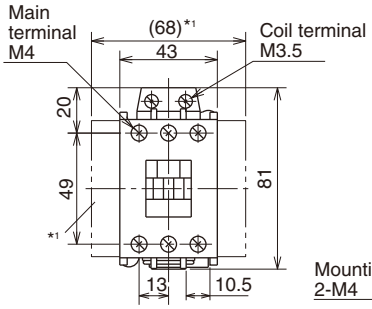

Panel drilling

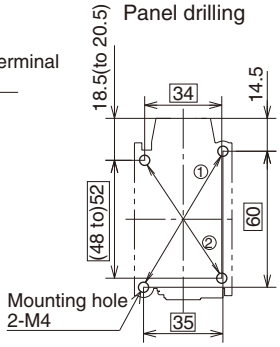

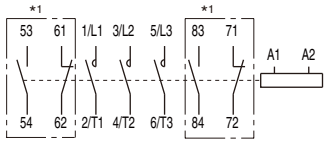

*1 In case of aux. contact 2NO+2NC

Use the two mounting holes on a diagonal line
① or ② to mount contactor
①: 35 × 60 ②: 34 × (48 to) 52

Mass: 0.59kg

SC-E1/G, E2/G, E2S/G

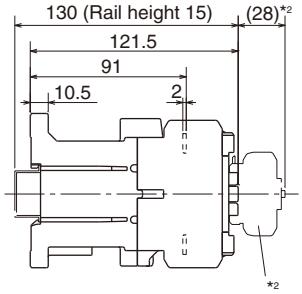

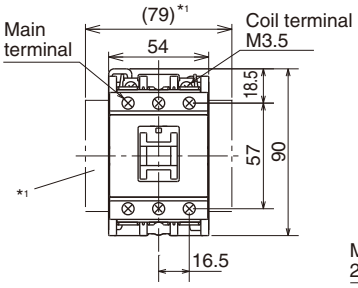

Panel drilling

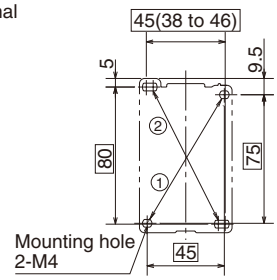

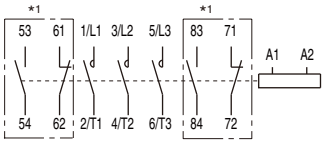

*1 In case of aux. contact 2NO+2NC

Use the two mounting holes on a diagonal line
① or ② to mount contactor
①: 45×75 ②: 45 (38 to 46)×80

Mass: 0.79kg

*1 Side mounting aux. contact block
*2 Front mounting aux. contact block

■ Dimensions, mm

• Non-reversing/DC operated
SC-E3/G, E4/G

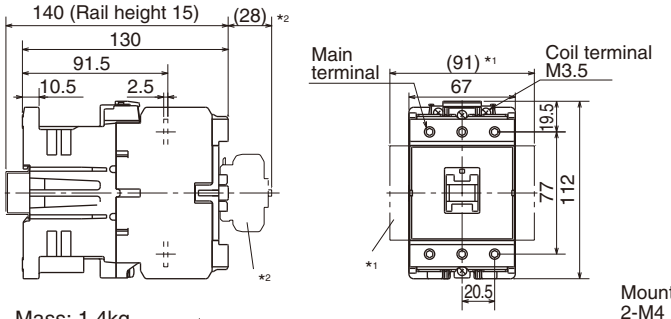

Mass: 1.4kg

*1 Side mounting aux. contact block
*2 Front mounting aux. contact block

Panel drilling

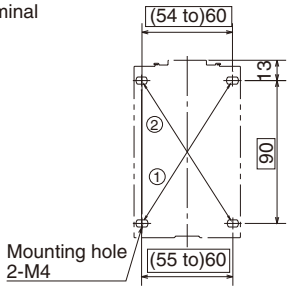

• Reversing/AC operated
SC-E02RM, E03RM, E04RM, E05RM

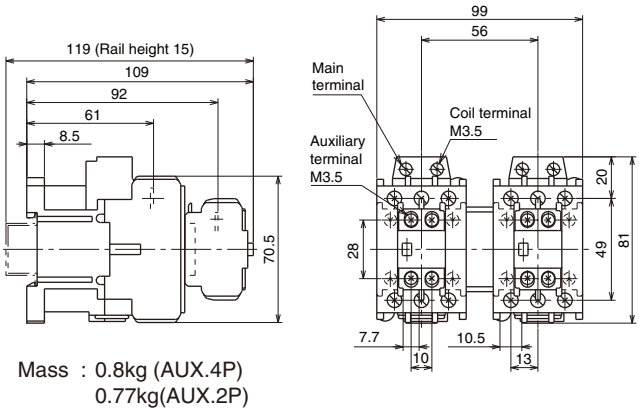

Mass : 0.8kg (AUX.4P)
0.77kg(AUX.2P)

Panel drilling

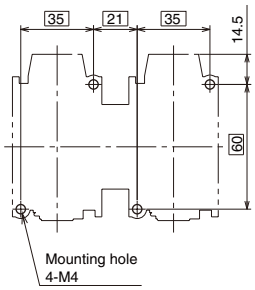

SC-E1RM, E2RM, E2SRM

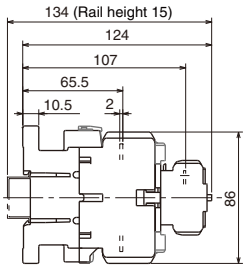

Mass : 1.3kg (AUX.4P)
1.27kg(AUX.2P)

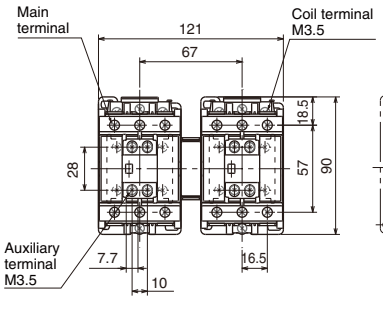

Panel drilling

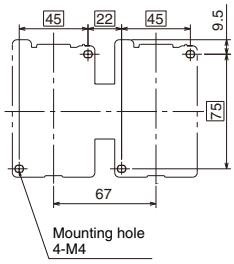

SC-E3RM, E4RM

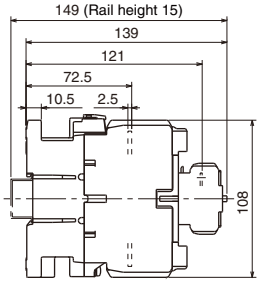

Mass : 2.24kg(AUX.4P)
2.21kg(AUX.2P)

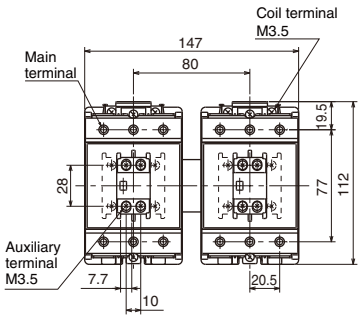

Panel drilling

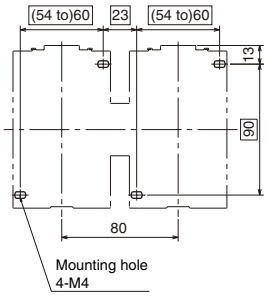

■ Wiring diagrams

SC-E02RM to E4RM

(1NO+1NC) × 2

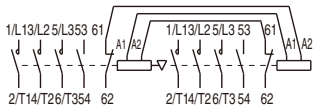

2NC × 2

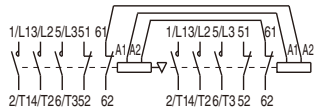

(2NO+2NC) × 2

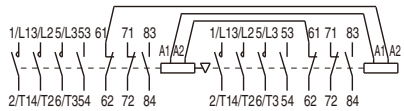

(3NO+NC) × 2

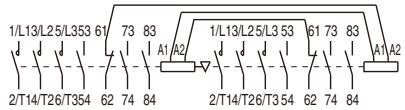

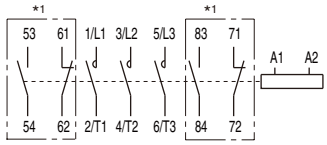

*1 In case of aux. contact 2NO+2NC

Use the two mounting holes on a diagonal line
① or ② to mount contactor
①: (55 to) 60 × 90 ②: (54 to) 60 × 90

Magnetic-Contactors
SC-E series Dimensions

■ Dimensions, mm

• Reversing/AC operated

SC-E5RM

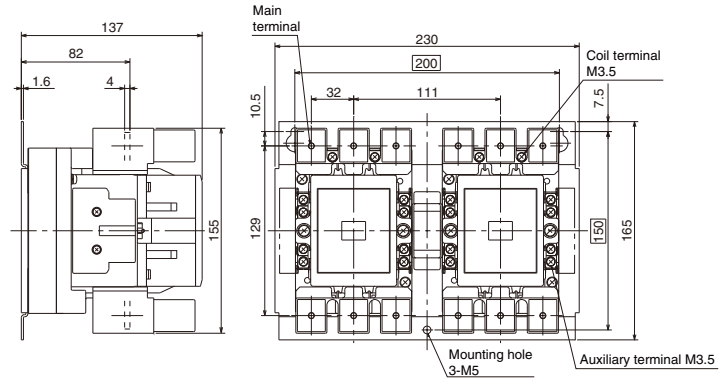

Mass : 4.64kg

SC-E6RM

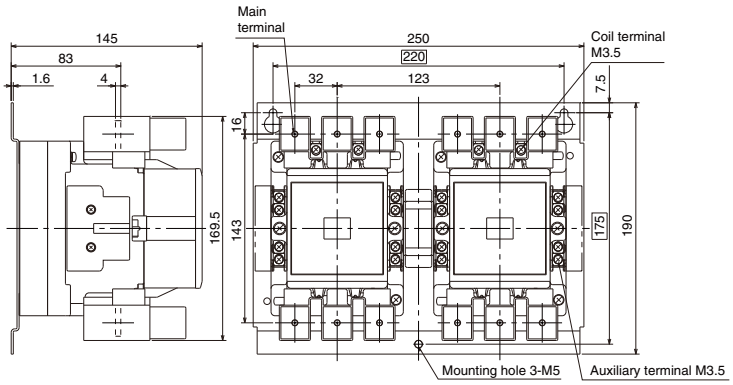

Mass : 5.8kg

SC-E7RM

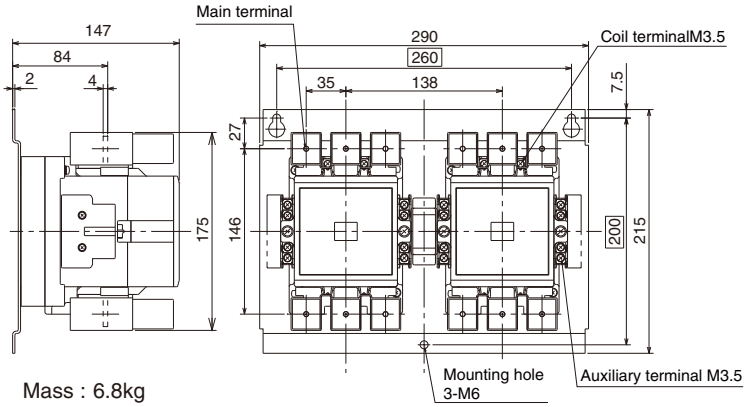

Mass : 6.8kg

■ Wiring diagrams

SC-E5RM to E7RM

(1NO+1NC) × 2

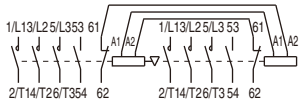

2NC × 2

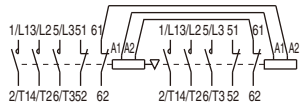

(2NO+2NC) × 2

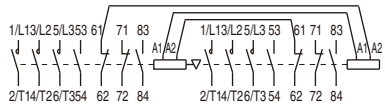

(3NO+NC) × 2

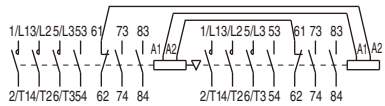

■ Dimensions, mm

• Reversing/DC operated

SC-02RM/G, 03RM/G, 04RM/G, 05RM/G

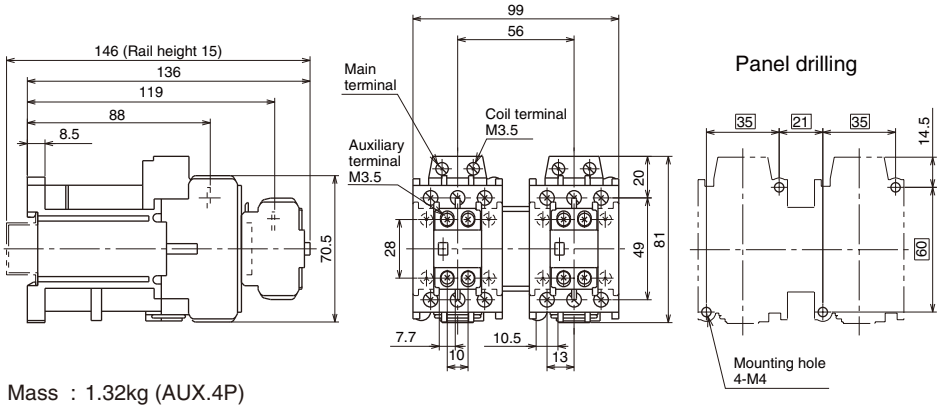

Mass : 1.32kg (AUX.4P)
1.29kg(AUX.2P)

SC-E1RM/G, E2RM/G, E2SRM/G

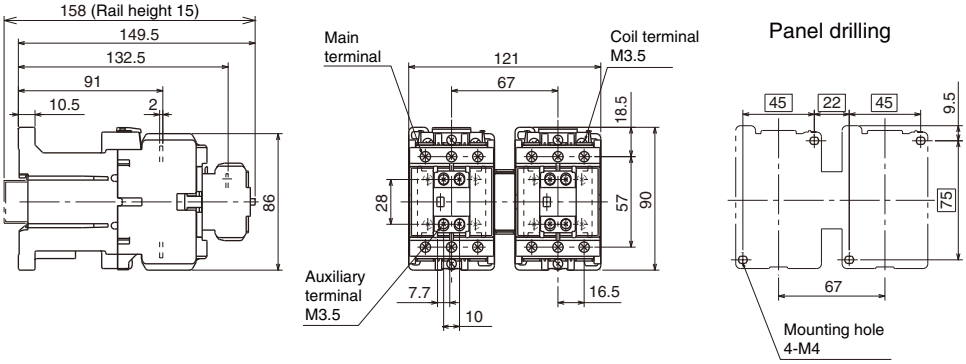

Mass : 1.72kg (AUX.4P)
1.69kg(AUX.2P)

SC-E3RM/G, E4RM/G

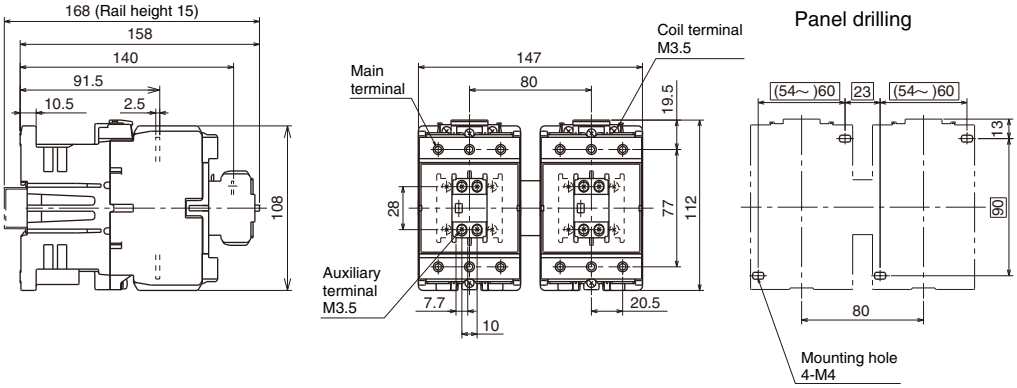

Mass : 2.84kg (AUX.4P)
2.81kg(AUX.2P)

■ Wiring diagrams

SC-E5RM to E7RM

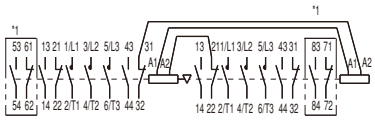

*1 In case of aux. contact (3NO+3NC) × 2

A2

Magnetic-Contactors
SC-E series Dimensions

■ Dimensions, mm

• Auxiliary contact blocks/Front mounting
SZ-A40/T, A31/T, A22/T, A20/T, A11/T, A02/T for SC-E02 to E4

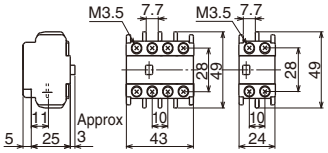

SZ-A40/T, A31/T, A22/T Mass: 36g
SZ-A20/T, A11/T, A02/T Mass: 20g

Contactor with aux. contact block

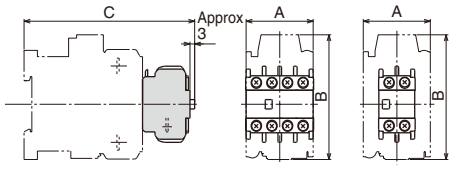

Type	A	B	C
SC-E02, E03, E04, E05	43	81	109
SC-E1, E2, E2S	54	90	124
SC-E3, E4	67	112	139

• Auxiliary contact blocks/Side mounting
SZ-AS1/T, for SC-E02 to E4

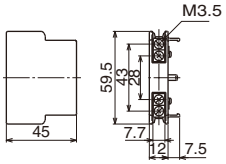

Mass: 28g

Contactor with aux. contact block

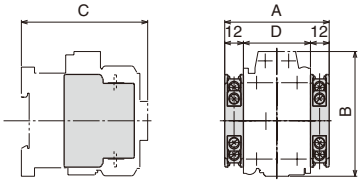

Type	A	B	C	D
SC-E02, E03, E04, E05	68	81	81	43
SC-E1, E2, E2S	79	90	96	54
SC-E3, E4S	91	112	111	67

SZ-AS2/T, for SC-E5 to E7

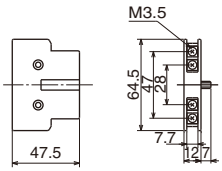

Mass: 33g

Contactor with aux. contact block

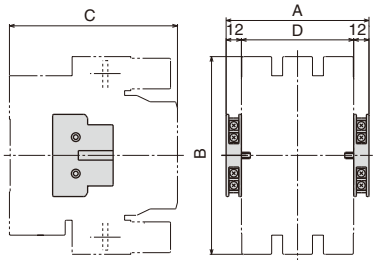

Type	A	B	C	D
SC-E5	112	155	132	88
SC-E6	123	169	138	100
SC-E7	139	175	140	115

■ Wiring diagrams

4NO

2NO

3NO+1NC

1NO+1NC

2NO+2NC

2NC

1NO+1NC

Mounted on right side

Mounted on left side

1NO+1NC

Mounted on right side

Mounted on left side

■ Dimensions, mm

• Main circuit surge suppression units

SZ-ZM1E

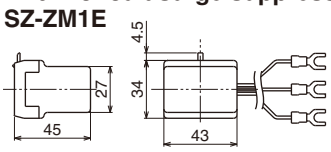

SZ-ZM3E

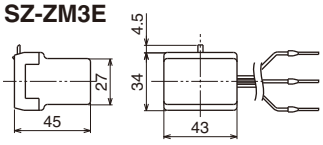

Mass: 60g

Contactor with surge suppression unit

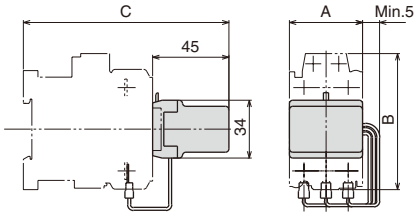

Type	A	B	C
SC-E02+SZ-ZM1E SC-E03+SZ-ZM1E SC-E04+SZ-ZM1E SC-E05+SZ-ZM1E	43	81	121
SC-E1+SZ-ZM3E SC-E2+SZ-ZM3E SC-E2S+SZ-ZM3E	54	90	136
SC-E3+SZ-ZM3E SC-E4+SZ-ZM3E	67	112	151

SZ-ZM2E

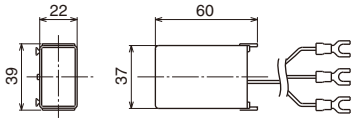

SZ-ZM4E

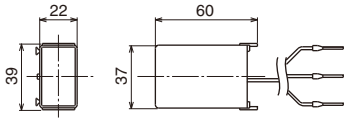

Mass: 60g

Contactor with surge suppression unit

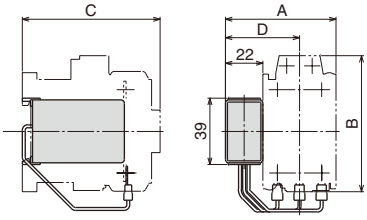

Type	A	B	C	D
SC-E02+SZ-ZM2E SC-E03+SZ-ZM2E SC-E04+SZ-ZM2E SC-E05+SZ-ZM2E SC-E1+SZ-ZM2E	65	81	81	43.5
SC-E2+SZ-ZM4E SC-E2S+SZ-ZM4E	76	90	96	49
SC-E3+SZ-ZM4E SC-E4+SZ-ZM4E	89	112	111	55.5

Connection diagram

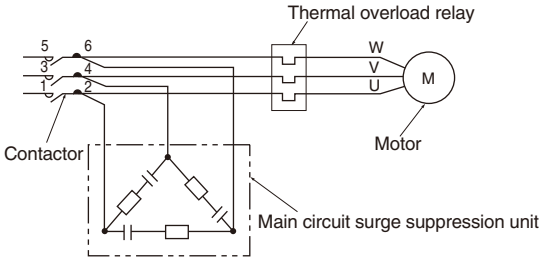

• Coil surge suppression units

SZ-Z1, Z2, Z3, Z4, Z5

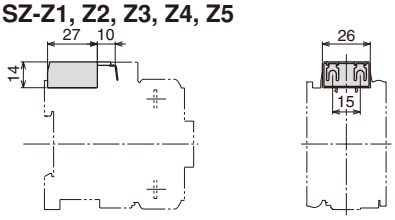

Mass: 14g

SC-E02 to E05 + SZ-Z1 to Z3
(Built-in varistor)

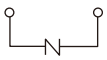

SC-E02 to E05 + SZ-Z4, Z5
(Built-in CR)

SZ-Z6, Z7, Z8, Z9

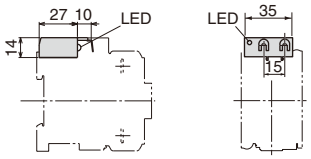

Mass: 16g

SC-E02 to E05 + SZ-Z6, Z7
(Built-in varistor with operating indicator)

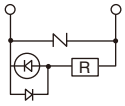

SC-E02 to E05 + SZ-Z8, Z9
(Built-in CR with operating indicator)

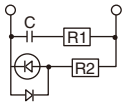

SZ-Z31, Z32, Z33, Z34, Z35, Z36, Z37

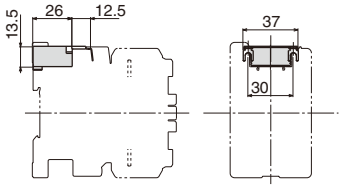

Mass: 15g

SC-E1 to E4 + SZ-Z31 to Z33
(Built-in varistor)

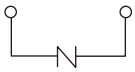

SC-E1 to E4 + SZ-Z34, Z35
(Built-in CR)
SC-E1/G to E4/G + SZ-Z36, Z37
(Built-in CR)

Magnetic-Contactors
SC-E series Dimensions

■ Dimensions, mm

• Mechanical interlock unit
SZ-RM

Interlock block

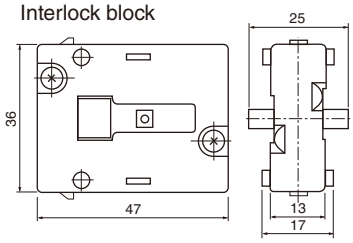

Mass : 18g

Connector block

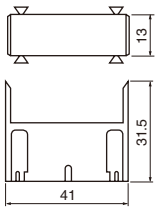

Mass : 4.2g

• Power connection kit for reversing
For crossover wiring/SZ-ERW1/A

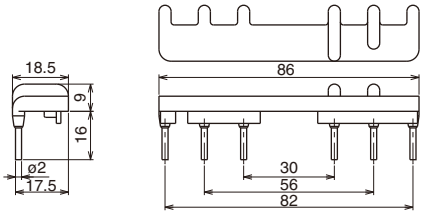

Mass : 19g

Used with	Wiring side	Wiring
SC-E02RM, E03RM, E04RM, E05RM SC-E02RM/G, E03RM/G, E04RM/G, E05RM/G	Line side	

Note : When using this connection kit, use a separate mounting thermal overload relay to connect to the magnetic contactor. If the attachment tab is used for assembly to the magnetic contactor, interference by components will make assembly impossible. To assemble using the attachment tab, use the SZ-ERW1/D type power connection kit.

For phase replaceing wiring/SZ-ERW1/B

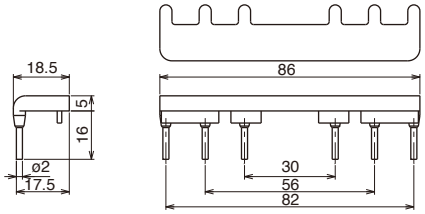

Mass : 17g

Used with	Wiring side	Wiring
SC-E02RM, E03RM, E04RM, E05RM SC-E02RM/G, E03RM/G, E04RM/G, E05RM/G	Load side	

Note : When using this connection kit, use a separate mounting thermal overload relay to connect to the magnetic contactor. If the attachment tab is used for assembly to the magnetic contactor, interference by components will make assembly impossible. To assemble using the attachment tab, use the SZ-ERW1/D type power connection kit.

For phase replaceing wiring/SZ-ERW1/D

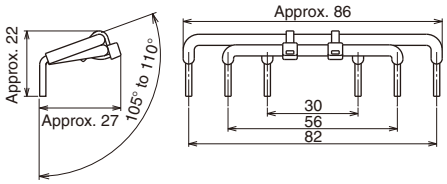

Mass : 13g

Used with	Wiring side	Wiring	Cable
SC-E02RM, E03RM, E04RM, E05RM SC-E02RM/G, E03RM/G, E04RM/G, E05RM/G	Load side		UL No3271 AWG12(Dia. Ø2) Color : Black

Note : Use this connection kit for assembly using the attachment tab of the thermal overload relay.

For crossover wiring/SZ-ERW2/A

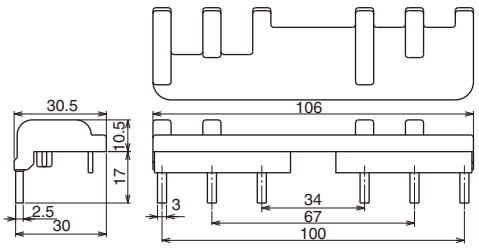

Mass : 48g

Used with	Wiring side	Wiring
SC-E1RM, E2RM, E2SRM SC-E1RM/G, E2RM/G, E2SRM/G	Line side	

Note : When using this connection kit, use a separate mounting thermal overload relay to connect to the magnetic contactor. If the attachment tab is used for assembly to the magnetic contactor, interference by components will make assembly impossible. To assemble using the attachment tab, use the SZ-ERW2/D type power connection kit.

■ Dimensions, mm

For phase replaceing wiring/SZ-ERW2/B

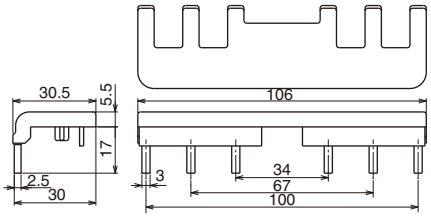

Mass : 42g

Used with	Wiring side	Wiring
SC-E1RM, E2RM, E2SRM SC-E1RM/G, E2RM/G, E2SRM/G	Load side	

Note : When using this connection kit, use a separate mounting thermal overload relay to connect to the magnetic contactor. If the attachment tab is used for assembly to the magnetic contactor, interference by components will make assembly impossible. To assemble using the attachment tab, use the SZ-ERW2/D type power connection kit.

For crossover wiring/SZ-ERW3/A

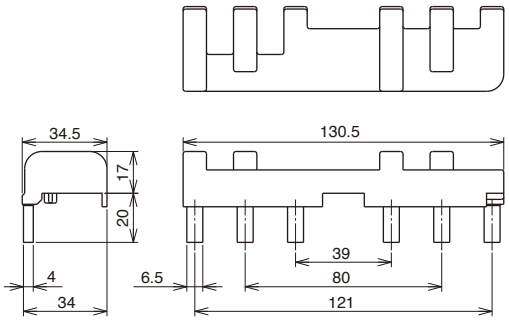

Mass : 162g

Used with	Wiring side	Wiring
SC-E3RM, E4RM SC-E3RM/G, E4RM/G	Line side	

Note : When using this connection kit, use a separate mounting thermal overload relay to connect to the magnetic contactor. If the attachment tab is used for assembly to the magnetic contactor, interference by components will make assembly impossible. To assemble using the attachment tab, use the SZ-ERW3/D type power connection kit.

For phase replaceing wiring/SZ-ERW3/B

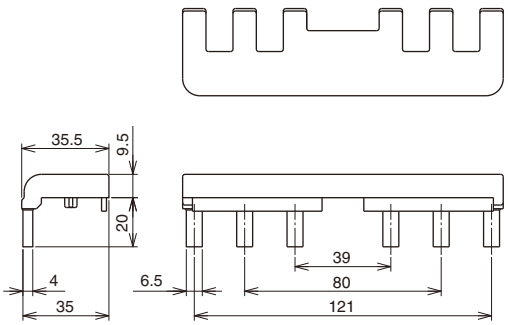

Mass : 138g

Used with	Wiring side	Wiring
SC-E3RM, E4RM SC-E3RM/G, E4RM/G	Load side	

Note : When using this connection kit, use a separate mounting thermal overload relay to connect to the magnetic contactor. If the attachment tab is used for assembly to the magnetic contactor, interference by components will make assembly impossible. To assemble using the attachment tab, use the SZ-ERW3/D type power connection kit.

For phase replaceing wiring/SZ-ERW2/D

Terminal No. : 6/T3 – 2/T1

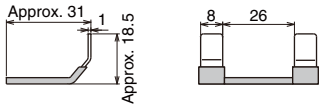

Terminal No. : 4/T2 – 4/T2

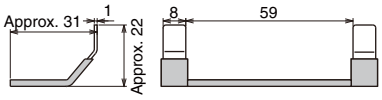

Terminal No. : 2/T1 – 6/T3

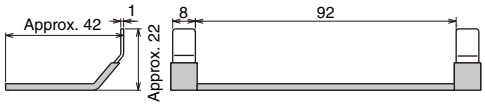

Mass : 31g

Used with	Wiring side	Wiring
SC-E1RM, E2RM, E2SRM SC-E1RM/G, E2RM/G, E2SRM/G	Load side	

Note : Use this connection kit for assembly using the attachment tab of the thermal overload relay.

For phase replaceing wiring/SZ-ERW3/D

Terminal No. : 6/T3 – 2/T1

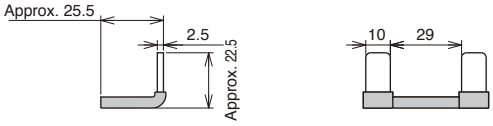

Terminal No. : 4/T2 – 4/T2

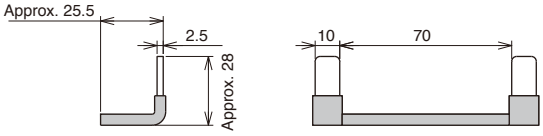

Terminal No. : 2/T1 – 6/T3

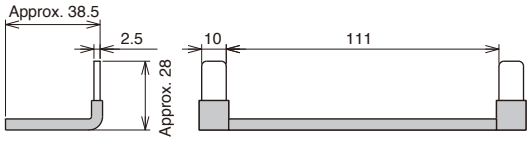

Mass : 110g

Used with	Wiring side	Wiring
SC-E3RM, E4RM SC-E3RM/G, E4RM/G	Load side	

Note : Use this connection kit for assembly using the attachment tab of the thermal overload relay.

Magnetic-Contactors
SC-E series Dimensions

■ Dimensions, mm

For crossover wiring/SZ-ERW4/A
For phase replaceing wiring/SZ-ERW4/B

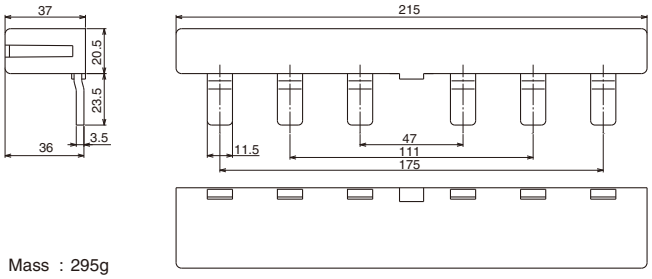

Mass : 295g

Used with	Type	Wiring side	Wiring
SC-E5RM	**SZ-ERW4/A**	Line side	
	SZ-ERW4/B	Load side	

Note : When using this connection kit, use a separate mounting thermal overload relay to connect to the magnetic contactor.

For crossover wiring/SZ-ERW5/A
For phase replaceing wiring/SZ-ERW5/B

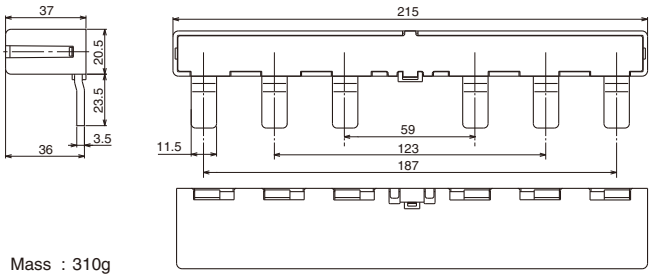

Mass : 310g

Used with	Type	Wiring side	Wiring
SC-E6RM	**SZ-ERW5/A**	Line side	
	SZ-ERW5/B	Load side	

Note : When using this connection kit, use a separate mounting thermal overload relay to connect to the magnetic contactor.

For crossover wiring/SZ-ERW6/A
For phase replaceing wiring/SZ-ERW6/B

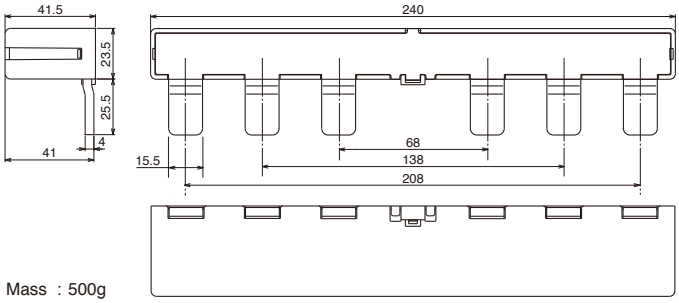

Mass : 500g

Used with	Type	Wiring side	Wiring
SC-E7RM	**SZ-ERW6/A**	Line side	
	SZ-ERW6/B	Load side	

Note : When using this connection kit, use a separate mounting thermal overload relay to connect to the magnetic contactor.

For crossover wiring (crimp terminal) /SZ-ERW1/A

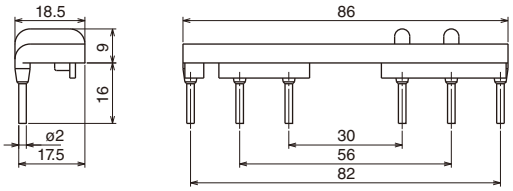

Mass:19g

Used with	Wiring side	Wiring
SC-E02PRM, E03PRM, E04PRM, E05PRM SC-E02PRM/G, E03PRM/G, E04PRM/G, E05PRM/G	Line side	

For phase replaceing (crimp terminal) /SZ-EPRW1/C

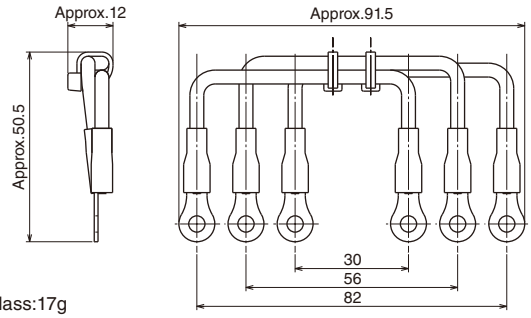

Mass:17g

Used with	Wiring side	Wiring
SC-E02PRM, E03PRM, E04PRM, E05PRM SC-E02PRM/G, E03PRM/G, E04PRM/G, E05PRM/G	Line side	

Fuji Electric FA Components & Systems Co., Ltd.
Information subject to change without notice

■ Standard operating conditions

The magnetic contactors are manufactured for use in the standard operating conditions given in the table at the right.
Consult FUJI before using the magnetic contactors in different conditions.

Ambient temperature	Operating: –5 to 55°C No sudden temperature changes resulting in condensation or icing (The average temperature over a 24-hour period must not exceed 35°C) Storage: –40 to 65°C
Humidity	45 to 85%RH
Altitude	2000m or lower
Atmosphere	No excessive dust, smoke, corrosive gases, flammable gases, steam, or salt
Vibration	10 to 55Hz 15m/s^2
Shock	50m/s^2
Mounting	Screw mounting, 35mm IEC top hat rail mounting (SC-E02 to SC-E4)
Mounting angle	
Standard	IEC 60947-4-1, EN 60947-4-1, VDE 0660 JIS C 8201-4-1, UL 508, CSA C22.2 TÜV (EN60947-4-1)

■ Wirings

• Connection wires and terminal processing

Be sure to perform wiring correctly with reference to the connections diagram. Main terminals for models SC-E02 to SC-E7 are wired using solid wires or stranded wires.
Stranded wires or flexible stranded wires can be connected by twisting them together, crimping a sleeve (ferrule) onto them before connecting.

• Tightening torque

If wires are not tightened sufficiently, they may become hot or come loose and result in a fire, short-circuit, electric shock, or some other potentially dangerous situation. Be sure to tighten the wires to the torques specified in the tables below.

• Connectable wire sizes, tightening tools, tightening torques

Main circuit

Contactor type		SC-E02, SC-E03, SC-E04, SC-E05
Solid wire (mm^2)	One	0.75 to 6
	Two	1 to 4 or 1.5 to 6
Stranded wire (mm^2) *1	One	0.75 to 6
	Two	1 to 4 or 1.5 to 6
AWG	One	18 to 10
	Two	18 to 12 or 16 to 10
Sheath stripping length (mm)		11
Terminal screw size		M4
Tool		⊕Phillips screwdriver, H-type, No. 2 (ISO 8764) ⊖Flat-blade screwdriver, 15.5L-type, B (ISO 2830)
Tightening torque [N·m]		1.2 to 1.5

Control circuit

Solid or stranded wire (mm^2)	One	0.75 to 2.5 (ø1 to 1.6)
	Two	0.75 to 1.5 or 1.5 to 2.5
AWG	One	18 to 14
	Two	18 to 14
Sheath stripping length (mm)		10
Fork terminal		Max. 7.7mm wide
Terminal screw size		M3.5
Tool		⊕Phillips screwdriver, H-type, No. 2 (ISO 8764) ⊖Flat-blade screwdriver, 1×5.5×L-type, B (ISO 2830)
Tightening torque [N·m]		0.8 to 1

Contactor type			SC-E1, E2, E2S	SC-E3, E4	SC-E5, E6	SC-E7
Top-only connection	Solid or stranded wire (mm^2) *1		0.75 to 35	1 to 70	2.5 to 70	4 to 120
	Flexible stranded wire with sleeve (mm^2)		0.75 to 25	1 to 50	2.5 to 50	2.5 to 95
	Flexible stranded wire without sleeve (mm^2)		0.75 to 25	1 to 50	2.5 to 50	4 to 95
	AWG		18 to 2	16 to 2/0	12 to 2/0	12 to 250MCM
	Sheath stripping length (mm)		15	19.5	26.5	28.5
Bottom-only connection	Solid or stranded wire (mm^2) *1		0.75 to 25	1 to 50	2.5 to 70	4 to 120
	Flexible stranded wire with sleeve (mm^2)		0.75 to 16	1 to 35	2.5 to 50	2.5 to 95
	Flexible stranded wire without sleeve (mm^2)		0.75 to 16	1 to 35	2.5 to 50	4 to 95
	AWG		18 to 3	16 to 1/0	12 to 2/0	12 to 250MCM
	Sheath stripping length (mm)		12.5	16	26.5	28.5
Top/bottom connection	Solid or stranded wire (mm^2) *1	Top/bottom	0.75 to 25	1 to 50	2.5 to 70	4 to 120
	Flexible stranded wire with sleeve (mm^2)	Top/bottom	0.75 to 16	1 to 35	2.5 to 50	2.5 to 95
	Flexible stranded wire without sleeve (mm^2)	Top/bottom	0.75 to 16	1 to 35	2.5 to 50	4 to 95
	AWG	Top/bottom	18 to 3	16 to 1/0	12 to 2/0	12 to 250MCM
Tool			⊕Phillips screwdriver, H-type, No. 2 (ISO 8764) ⊖Flat-blade screwdriver, 1×5.5×L-type, B (ISO 2830)	◎Hex. wrench 4 (ISO 2936)		
Tightening torque (N·m)			2.5	8		10
Self-locking torque (N·m) *2			1	2		

Notes: *1 Stranded wire (0 to 35mm^2) consists of 7 wires or less.
Stranded wire (38 to 120mm^2) consists of 19 wires or less.
Flexible stranded wire consists of more number wires than the above.

*2 The tightening bolt must be loosened in order to insert the wire. However, stop loosening the bolt when the anti-drop attachment on the bottom of the bolt reaches the top edge of the terminal. If a torque exceeding that given in the table is applied in this state, the retaining plate may come loose.

Magnetic-Contactors
SC-E series Operation conditions

■ Mounting

(1) Although the standard mounting shown in Fig. 1 is the correct mounting method, the product may also be mounted front, rear, left and right angled, as shown below. (Fig. 2.)

- Products cannot be mounted rotated 180° from standard mounting.

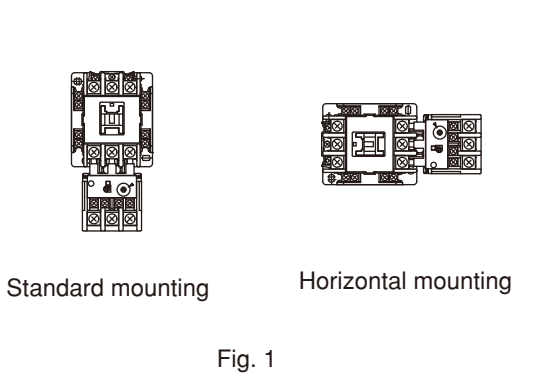

Fig. 1

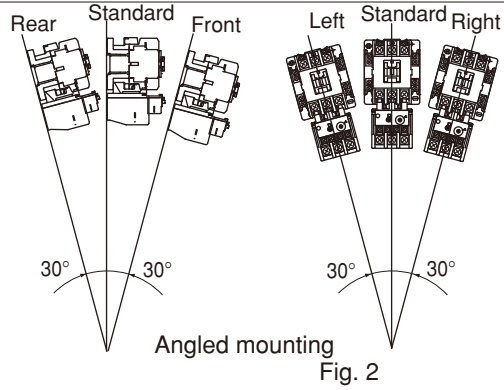

Fig. 2

(2) The product may need to be side mounted due to wiring or the mounting relationship with other equipment. This is acceptable as long as the following points are kept in mind.

- Although there will be hardly any difference in magnetic contactor characteristics, the mechanical durability and operating cycles per hour will decrease.
- The operational limiting current of the thermal overload relay will vary slightly.

Type	Mechanical durability (in 10,000s of times or more)		Operating cycles per hour (times/hour or more)	
	Standard mounting	Side mounting	Standard mounting	Side mounting
SC-E02, SC-E02P, SC-E02/G, SC-E02P/G	1000	80% of standard mounting	1800	80% of standard mounting
SC-E03, SC-E03P, SC-E03/G, SC-E03P/G	1000		1800	
SC-E04, SC-E04P, SC-E04/G, SC-E04P/G	1000		1800	
SC-E05, SC-E05P, SC-E05/G, SC-E05P/G	1000		1200	
SC-E1, SC-E1P, SC-E1/G, SC-E1P/G	1000		1200	
SC-E2, SC-E2P, SC-E2/G, SC-E2P/G	1000		1200	
SC-E2S, SC-E2SP, SC-E2S/G, SC-R2SP/G	1000		1200	
SC-E3, SC-E3P, SC-E3/G, SC-E3P/G	500		1200	
SC-E4, SC-E4P, SC-E4/G, SC-E4P/G	500		1200	
SC-E5	500		1200	
SC-E6	500		1200	
SC-E7	500		1200	

(3) Other types of mounting

- Standard type magnetic contactors/switches cannot be ceiling standard operating characteristic values due to the effect of the weight of the moving parts.
- Standard type magnetic contactors cannot be horizontally mounted. If horizontally mounted, they could malfunction due to external vibration/impact caused by the effect of the weight of the moving parts.

• **Connectable wire size and tightening torque (Ring terminal connection type)**

Main circuit

Contactor type	Terminal screw *1	Connectable wire size (mm^2)	Applicable ring terminal max. width (mm) *2 *4	Tightening torque (N·m)
SC-E02P to E05P	M4 ⊕ ⬚	1.25 to 6	9.7 (R1.25-4 to R5.5-4)	1.2 to 1.5
SC-E1P to E2SP	M5 ⊕ ⬚	2 to 22	12.4 *3 (R2-5 to R22-5)	2.0 to 2.5
SC-E3P, E4P	M6 ⊕ —	2 to 38	16.7 *3 (R2-6 to R38-6)	4.0 to 5.0

Main circuit

Contactor type	Terminal screw *1	Connectable wire size (mm^2)	Applicable ring terminal max. width (mm) *2	Tightening torque (N·m)
	Coil terminal (Contactor)	Coil terminal (Contactor)	Coil terminal (Contactor)	Coil terminal (Contactor)
SC-E02P to E4P	M3.5 ⊕ ⬚	1.25 to 2 (1.2 to 2mm dia.)	7.7 (R1.25-3.5 to R2-3.5)	0.8 to 1.0

Note 1 The motor starter has plus-minus shaped terminal screws of ⊕ ⬚ (M4, M5).
Note 2 Two wires or two crimp terminals can be connected to each terminal.
Note 3 Use insulation caps to use ring crimp terminals.
*1 ⊕: Cross-recessed pan-head screw ⬚: Non-oriented square washer, turtleback washer
—: Circular bright plain washer ⊕: Cross-recessed hexagonal head bolt
*2 Round crimp terminal JIS C 2805
*3 Use crimp terminals of max. width or less. (Use narrow-width terminals made by crimp terminal manufacturers.)
*4 Use crimp terminal manufacturers' standard models.

Magnetic-Contactors
SC-E series Thermal overload relays

TK-E series with phase-loss protective device

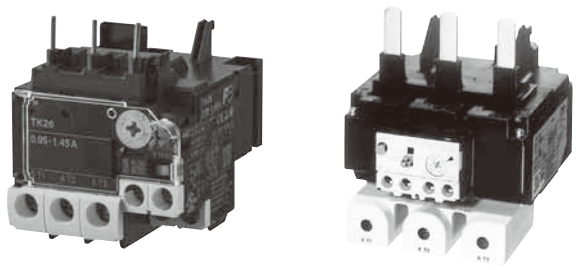

TK26E TK-E6

KKD14-114 AF01-84

■ Features

- This relay protects motor windings from burning due to overloads, locked rotor current, or phase-loss.
- Maintenance and inspection safety has been improved by employing a finger protection mechanism to cover exposed terminals (conforms to DIN 57106, VDE 0106 Teil 100).
- Isolated NO and NC contacts can be used with different potentials.
- A high-precision scale for the current adjustment dial enables easy and exact current setting.
- The operating status can be visually checked with ease.
- The relays can be manually tripped. A trip-free mechanism is also provided.
- Base unit can be added to enable separate-mounting types of the TK-E02, E2, and E3 models.

■ Types and specifications

Applicable contactor Non-reversing	Type	Aux. contact	Trip category (JIS)	No. of heater elements	Power consumption per pole	Provided functions
SC-E02, E03, E04, E05	**TK26E**	1NO+1NC	10A	3	1.7VA	Overload, phase-loss protection
SC-E1, E2, E2S	**TK-E2**				3.8VA	Ambient temperature compensation
SC-E3, E4	**TK-E3**				6.6VA	Manual/auto reset selectable
SC-E5	**TK-E5**				6.6VA	Manual trip mechanism
SC-E6, E7	**TK-E6**				8.0VA	Trip indicator
Separate mounting type	**TK-E6H**					

■ Ampere setting range

Order current (A)	Thermal overload relay type				
	TK26E-□	**TK-E2**	**TK-E3**	**TK-E5**	**TK-E6, E6H ***
0.1	0.1–0.15 (P10)				
0.13	0.13–0.2 (P13)				
0.18	0.18–0.27 (P18)				
0.24	0.24–0.36 (P24)				
0.34	0.34–0.52 (P34)				
0.48	0.48–0.72 (P48)				
0.64	0.64–0.96 (P64)				
0.8	0.8–1.2 (P95)				
0.95	0.95–1.45 (P95)				
1.1	1.1–1.65 (1P1)				
1.4	1.4–2.1 (2P1)				
1.7	1.7–2.6 (1P7)				
2.2	2.2–3.4 (2P2)				
2.8	2.8–4.2 (2P8)				
4	4–6 (004)	4–6			
5	5–7.5 (005)	5–8			
6	6–9 (006)	6–9			
7	7–10.5 (007)	7–11	7–11		
9	9–13 (009)	9–13	9–13		
12	12–18 (012)	12–18	12–18		
16	16–22 (016)				
18		18–26	18–26	18–26	
20	20–26 (020)				
24		24–36	24–36	24–36	
28			28–40	28–40	
32		32–42			
34			34–50	34–50	
40		40–50			
44		44–54			
45			45–65	45–65	45–65
48			48–68		
53					53–80
64			64–80		
65			65–95 *	65–95	65–95
85			85–105 *	85–105	
85					85–125
110					110–160

Note: * Applicable only for separate-mounting type. Not applicable for use in combination with a magnetic contactor.
( ) : Ordering code of ampere setting range for TK26E.

■ Standards

IEC 60947-4-1, EN60947-4-1
VDE 0660, JIS C 8201-4-1
UL 508, CSA C22.2
TÜV (EN60947-4-1)

■ Ordering information

Specify the following:
1. Type number
2. Ampere setting range order current (Ordering code for TK26E)

Fuji Electric FA Components & Systems Co., Ltd. Information subject to change without notice

■ Auxiliary contact ratings

• Based on JIS and IEC

Type	Rated insulation voltage (V)	Rated thermal current (A)	Rated operational current (A) AC Voltage (V)	AC-15 Ind. load	DC Voltage (V)	DC-13 Ind. load	Minimum voltage and current
TK26E	690	5	24	3 (0.3) *	24	1.1 (0.3)	3V DC, 5mA
			100–120	2.5 (0.3) *	100–120	0.28	
			200–240	2 (0.3) *	200–240	0.14	
			380–440	1 (0.3) *			
			500–600	0.6 (0.3) *			
TK-E2	690	5	24	3 (0.5) *	24	1.1 (0.3)	3V DC, 5mA
TK-E3			100–120	2.5 (0.5) *	100–120	0.28	
TK-E5			200–240	2 (0.5) *	200–240	0.14	
TK-E6			380–440	1 (0.5) *			
			500–600	0.6 (0.5) *			

Note: * In case of auto reset type NO contact.

• Based on UL and CSA

Type	Rated insulation voltage (V)	Rated thermal current (A)	Making and breaking current (A) AC (rating code B600) Voltage (V)	Making (A)	Breaking (A)	DC (rating code R300) Voltage (V)	Making (A)	Breaking (A)
TK26E	600	5	120	30	3	120	0.22	0.22
TK-E2, E3			240	15	1.5	250	0.11	0.11
TK-E5			480	7.5	0.75			
TK-E6			600	6	0.6			

■ Operating characteristics (mean value)

• TK26E

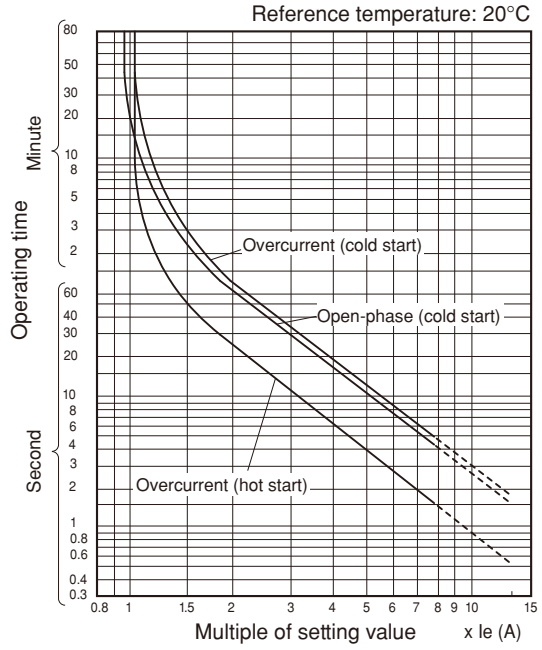

• TK-E2 to E6, E6H

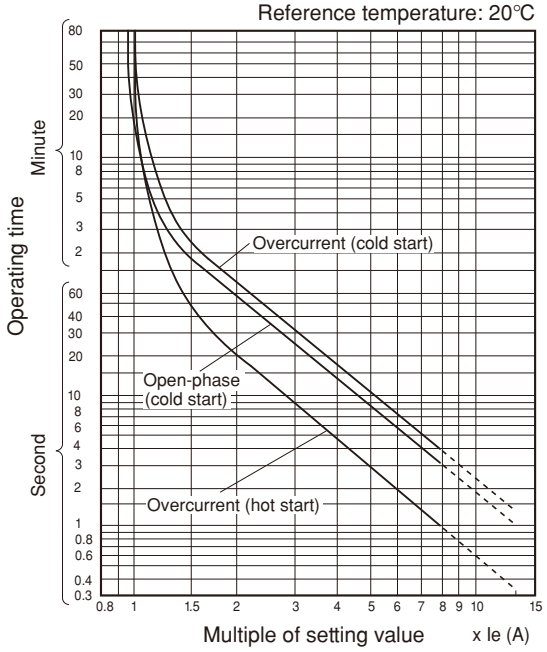

Magnetic-Contactors
SC-E series Thermal overload relays

■ Optional accessories

• Base units for separate mounting

The base unit modifies thermal overload relays to separate mounting types that can be mounted to 35mm-wide IEC top hat rail or secured with screws.

Applicable thermal overload relay	Type
TK26E	**TZ1H26E**
TK-E2	**SZ-HDE**
TK-E3	**SZ-HEE**

• Trip indicator

Reports any tripping action at a thermal overload relay through its LED display.

Applicable thermal overload relay	Rated voltage	Type
TK-E2 to TK-E6	100–110V AC, 50/60Hz	**SZ-L100N2**
	200–220V AC, 50/60Hz	**SZ-L200N2**

• Reset release button

Reset a thermal overload relay from the rear side of the board or a distant location

Applicable thermal overload relay	Load length (mm)	Type
TK26E	300	**SZ-R1**
	500	**SZ-R2**
	700	**SZ-R3**
TK-E2 to TK-E6	300	**SZ-R4**
	500	**SZ-R5**
	700	**SZ-R6**

KK01-108

Base unit
SZ-HDE

AF00-291

Trip indicator
SZ-L200N2

AF88-585

Reset release button
SZ-R1

AF88-1056

Dial cover
SZ-DA

• Dial cover

Protects the setting current value of a thermal overload relay from being changed unintentionally.

Applicable thermal overload relay	Type
TK-E02 to TK-E6	**SZ-DA**

Information subject to change without notice

Molded Case Circuit Breakers
Earth Leakage Circuit Breakers

Page

G-TWIN series Molded Case Circuit Breakers

List of products B1-1
Type number nomenclature B1-2
Quick reference guide B1-4
Mounting modifications B1-22
Terminal connection B1-24
Wire size and terminal B1-25
Type number B1-29
Arc space B1-38
Dimensions B1-39
Characteristic curves B1-58
Accessories B1-63

G-TWIN series Earth Leakage Circuit Breakers

List of products B1-93
Type number nomenclature B1-94
Quick reference guide B1-96
Mounting modifications B1-114
Terminal connection B1-116
Wire size and terminal B1-117
Type number B1-121
Arc space B1-127
Dimensions B1-128
Characteristic curves B1-143
Accessories B1-149

G-TWIN Λ series Molded Case Circuit Breakers / Earth Leakage Circuit Breakers

Type number nomenclature B1-180
Specifications B1-181
Mounting and connection B1-186
Accessories B1-189
Data, Characteristics curves, Dimensions B1-202

Earth Leakage Protective Relays

Description/Selection guide B1-215
Type number nomenclature/Specifications B1-216
Wire size B1-217
Dimensions B1-222
Wiring diagrams B1-225

MINIMUM ORDERS

Orders amounting to **less than ¥10,000** net per order will be charged as ¥10,000 net per order plus freight and other charges.

WEIGHTS AND DIMENSIONS

Weights and dimensions appearing in this catalog are the best information available at the time of going to press. FUJI ELECTRIC FA has a policy of continuous product improvement, and design changes may make this information out of date.
Please confirm such details before planning actual construction.

INFORMATION IN THIS CATALOG IS SUBJECT TO CHANGE WITHOUT NOTICE.

■ G-TWIN Standard Series (IEC/EN/GB/JIS conformed)

Line protection

AC415V Icu	BW32	BW50	BW63	BW100	BW125	BW160	BW250	BW400	BW630	BW800
1.5kA	AAG	AAG		AAG						
2.5kA	SAG	EAG	EAG							
7.5kA		SAG	SAG							
10kA		RAG	RAG	EAG						
18kA						EAG	EAG			
30kA					JAG	JAG	JAG	EAG		
36kA					SAG	SAG	SAG	SAG	EAG	EAG
50kA					RAG	RAG	RAG	RAG	RAG	RAG
65kA		HAG*			HAG*		HAG*			
70kA								HAG	HAG	HAG

Note: * There are no performance indications for GB standards for the BW50HAG, BW125HAG, and BW250HAG.

Motor protection

AC415V Icu	BW32	BW50	BW63	BW100	BW125	BW250
1.5kA	AAM					
2.5kA	SAM	EAM	EAM			
7.5kA		SAM	SAM			
10kA		RAM		EAM		
18kA						EAM
30kA					JAM	JAM
50kA					RAM	RAM

■ G-TWIN Global Series (IEC/EN/GB/JIS/UL/CSA conformed)

Line protection

AC415V Icu	BW50	BW100	BW125	BW250	BW400	BW630	BW800
10kA	RAGU	EAGU					
18kA				EAGU			
30kA			JAGU	JAGU	EAGU		
36kA					SAGU		
50kA			RAGU	RAGU	RAGU	RAGU	RAGU
70kA					HAGU	HAGU	HAGU

Molded Case Circuit Breakers
G-TWIN series Type number nomenclature

■ Type number nomenclature

BW 250 EA G □ - 3P 225 X

Series
BW: G-TWIN series MCCB

Frame size
32: 32AF 63: 63AF 125: 125AF 250: 250AF 630: 630AF
50: 50AF 100: 100AF 160: 160AF 400: 400AF 800: 800AF

Breaking capacity

	Rated breaking capacity Icu (440V AC)									
	32AF	50AF	63AF	100AF	125AF	160AF	250AF	400AF	630AF	800AF
AA	1.5kA	1.5kA	–	1.5kA	–	–	–	–	–	–
EA	1.5kA	2.5kA	2.5kA	10kA	–	18kA	18kA	30kA	36kA	36kA
JA	–	–	–	–	30kA	30kA	30kA	–	–	–
SA	2.5kA	7.5kA	7.5kA	–	36kA	36kA	36kA	36kA	–	–
RA	–	10kA	10kA	–	50kA	50kA	50kA	50kA	50kA	50kA
HA	–	65kA	–	–	65kA	–	65kA	70kA	70kA	70kA

Model
G: Line protection M: Motor protection

G-TWIN series
Blank: Standard U: UL489 Listed

No. of poles
2P: 2-pole 3P: 3-pole 4P: 4-pole

Rated current
See page B1-29.

Terminal combination (UL489 Listed type)

Code	Terminal position Line	Terminal position Load	Applicable breaker type BW50	BW100, 125, 250	BW400, 630, 800
Blank	Screw	Screw	●	●	–
Blank	Flat teminal	Flat teminal	–	–	●
SB	Block terminal	Block terminal	–	●	●
SF	Flat teminal	Flat teminal	●	●	–
S3	Screw	Flat terminal	●	●	–
S4	Flat teminal	Screw	●	●	–
S5	Screw	Block terminal	–	●	–
S6	Block terminal	Screw	–	●	–
S7	Flat teminal	Block terminal	–	●	●
S8	Block terminal	Flat terminal	–	●	●

Mounting and connection
• Standard type
Blank: Front mounting front connection
X: Front mounting rear connection
E: Flush mounting rear connection
Y: Flush mounting , top & bottom connection
P: Plug-in mounting

Molded Case Circuit Breakers
G-TWIN series Type number nomenclature

W K F□ R□ A Q2 M□ UC

Enclosure
UC: Standard
UV: Dust-proof (IP40)
UW: Rain-proof (IP54)

With motor operating device (32 - 100AF)
□: DC100V
AC100-110V
AC200-220V

Pad locking device
Q2: Plate type

Connection method (internal accessories)
Blank: Lead-wire system
A: Terminal block system

Undervoltage trip device (External)*
• 32/50/63/100AF
□: DC24V
: DC100-110V
: AC100V (50Hz) / AC100-110V (60Hz)
: AC200V (50Hz) / AC200-220V (60Hz)
: AC400V (50Hz) / AC400-440V (60Hz)

Undervoltage trip device (Internal)*

• 125/160/250AF	• 400/630/800AF
□: DC24V	AC/DC24V
: DC48V	AC/DC48V
: DC100-110V	AC/DC100-110V
: DC125V	AC120-130V / DC125V
: AC100-110V	AC200-240V / DC200-220V
: AC110-130V	AC277V
: AC200-240V	AC380-480V
: AC277V	
: AC380-415V	
: AC440-480V	

Shunt trip device (Internal)*
• 32/50/63/100AF
□: AC/DC24V
: AC100-120V / DC100-110V
: AC200-240V
: AC380-450V

Shunt trip device (Internal)*

• 125/160/250AF	• 400/630/800AF
□: AC/DC24V	AC/DC24-48V
: AC/DC48V	AC100-240V / DC100-220V
: AC100-120V / DC100-110V	AC277V
: AC120-130V	AC380-550V
: AC200-240V / DC200-220V	
: AC277V	
: AC380-440V	
: AC440-480V	
: AC500-550V	

Alarm switch*
K: Standard SPDT
J: Standard 2PDT
8: For low level circuit SPDT
9: For low level circuit 2PDT

Auxiliary switch*
W: Standard SPDT
V: Standard 2PDT
1: For low level circuit SPDT
2: For low level circuit 2PDT

* For the available configuration of accessory, *see page B1-68.*

Molded Case Circuit Breakers
G-TWIN series Quick reference guide

■ G-TWIN Standard Series

Ampere frame				32A			
Type				**BW32AAG**		**BW32SAG**	
Pole				2	3	2	3
Rated current Reference amb. temp. (40°C)		In(A)		3, 5, 10, 15, 20, 30, 32			
Rated impulse withstand voltage		Uimp(kV)		6		6	
Isolation compliant				●		●	
Rated insulation voltage Ui (V)		AC		500		690	
		DC		–		250*1	
Rated breaking capacity Icu/Ics (kA)	IEC 60947-2 EN 60947-2 JIS C 8201-2-1	AC	500V	–		1.5/1	
			440V	1.5/1		2.5/2	
			415V	1.5/1		2.5/2	
			400V	1.5/1		2.5/2	
			380V	1.5/1		2.5/2	
			240V	2.5/2		5/3	
			230V	2.5/2		5/3	
		DC	250V	–		2.5/2*1	
	GB14048.2	AC	400V	1.5/1		2.5/2	
			230V	2.5/2		5/3	
Conforming to standards	CE Marking			● (TÜV)		● (TÜV)	
	CCC certificate			●		●	
	Electrical Appliance and Material Safety Law <PS>E*2			●		●	
Dimensions (mm) 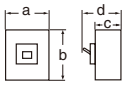			a	50	75	50	75
			b	100		100	
			c	60		60	
			d	84		84	
Mass (kg)				0.4	0.5	0.4	0.5
Tripping device				Hydraulic-magnetic			
Front mounting, front connection			No-mark	○	○	○	○
Front mounting, rear connection			X	○	○	○	○
Flush mounting, front connection			E	○	○	○	○
Flush mounting, top & bottom connection			Y	○	○	○	○
Plug-in mounting			P	○	○	○	○
IEC 35mm wide rail mounting			No-mark	○	○	○	○
Internal accessories			Page B1-63				
Alarm switch			K	○	○	○	○
Auxiliary switch			W	○	○	○	○
Undervoltage trip			R	○	○	○	○
Shunt trip			F	○	○	○	○
External accessories			Page B1-66				
Handle padlocking device	Cap type		Q1	○	○	○	○
Handle padlocking device	Plate type		Q2	▲	▲	▲	▲
Operating handle	N-type		N	○	○	○	○
Operating handle	V-type		V	○	○	○	○
Terminal cover	Short		BT□S	○	○	○	○
Terminal cover	Long		BT□L	○	○	○	○
Insulation barrier	Interphase		BP	○	○	○	○
	Earth		BL	○	○	○	○
Handle locking cover			L1	○	○	○	○
Flat terminal			SS	○	○	○	○
Block terminal			SL	–	–	–	–

●: Approved ○: Available –: Not available ▲ : Factory-mounted accessory
Note: *1 Specify DC only when ordering circut breakers for DC circuit.
*2 Electrical Appliance and Material Safety Law of Japan

Fuji Electric FA Components & Systems Co., Ltd.
Information subject to change without notice

■ G-TWIN Standard Series

Ampere frame				50A									
Type				**BW50AAG**		**BW50EAG**		**BW50SAG**		**BW50RAG**		**BW50HAG**	
Pole				2	3	2	3	2	3	2	3	2	3
Rated current Reference amb. temp. (40°C)		In(A)		5, 10, 15, 20, 30, 32, 40, 50						10, 15, 20, 30, 32, 40, 50		15, 20, 30, 40, 50	
Rated impulse withstand voltage		Uimp(kV)		6		6		6		6		6	
Isolation compliant				●		●		●		●		●	
Rated insulation voltage Ui (V)		AC		500		690		690		690		690	
		DC		–		250*1		250*1		250*1		250	
Rated breaking capacity Icu/Ics (kA)	IEC 60947-2 EN 60947-2 JIS C 8201-2-1	AC	500V	–		1.5/1		5/3		7.5/4		25/7	
			440V	1.5/1		2.5/2		7.5/4		10/5		65/17	
			415V	1.5/1		2.5/2		7.5/4		10/5		65/17	
			400V	1.5/1		2.5/2		7.5/4		10/5		65/17	
			380V	1.5/1		2.5/2		7.5/4		10/5		65/17	
			240V	2.5/2		5/3		10/5		25/13		125/63	
			230V	2.5/2		5/3		10/5		25/13		125/63	
		DC	250V	–		2.5/2*1		5/3*1		5/3*1		40/20	
	GB14048.2	AC	400V	1.5/1		2.5/2		7.5/4		10/5		–	
			230V	2.5/2		5/3		10/5		25/13		–	
Conforming to standards	CE Marking			● (TÜV)		● (TÜV)		● (TÜV)		● (TÜV)		●	
	CCC certificate			●		●		●		●		–	
	Electrical Appliance and Material Safety Law <PS>E*2			●		●		●		●		●	
Dimensions (mm) 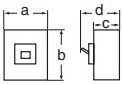			a	50	75	50	75	50	75	50	75	90	
			b	100		100		100		100		155	
			c	60		60		60		60		68	
			d	84		84		84		84		95	
Mass (kg)				0.4	0.5	0.4	0.5	0.4	0.5	0.4	0.5	1.0	1.2
Tripping device				Hydraulic-magnetic								Thermal-magnetic	
Front mounting, front connection			No-mark	○	○	○	○	○	○	○	○	○	○
Front mounting, rear connection			X	○	○	○	○	○	○	○	○	○	○
Flush mounting, front connection			E	○	○	○	○	○	○	○	○	○	○
Flush mounting, top & bottom connection			Y	○	○	○	○	○	○	○	○	–	–
Plug-in mounting			P	○	○	○	○	○	○	○	○	○	○
IEC 35mm wide rail mounting			No-mark	○	○	○	○	○	○	○	○	–	–
Internal accessories			Page B1-63										
Alarm switch			K	○	○	○	○	○	○	○	○	○	○
Auxiliary switch			W	○	○	○	○	○	○	○	○	○	○
Undervoltage trip			R	○	○	○	○	○	○	○	○	○	○
Shunt trip			F	○	○	○	○	○	○	○	○	○	○
External accessories			Page B1-66										
Handle padlocking device	Cap type		Q1/QN	○	○	○	○	○	○	○	○	○	○
Handle padlocking device	Plate type		Q2	▲	▲	▲	▲	▲	▲	▲	▲	○	○
Operating handle	N-type		N	○	○	○	○	○	○	○	○	○	○
Operating handle	V-type		V	○	○	○	○	○	○	○	○	○	○
Terminal cover	Short		BT□S	○	○	○	○	○	○	○	○	○	○
Terminal cover	Long		BT□L	○	○	○	○	○	○	○	○	○	○
Insulation barrier	Interphase		BP	○	○	○	○	○	○	○	○	○	○
	Earth		BL	○	○	○	○	○	○	○	○	–	–
Handle locking cover			L1	○	○	○	○	○	○	○	○	○	○
Flat terminal			SS	○	○	○	○	○	○	○	○	○	○
Block terminal			SL	–	–	–	–	–	–	–	–	○	○

●: Approved ○: Available –: Not available ▲ : Factory-mounted accessory
Note: *1 Specify DC only when ordering circut breakers for DC circuit.
*2 Electrical Appliance and Material Safety Law of Japan

Molded Case Circuit Breakers
G-TWIN series Quick reference guide

■ G-TWIN Standard Series

Ampere frame				63A					
Type				**BW63EAG**		**BW63SAG**		**BW63RAG**	
Pole				2	3	2	3	2	3
Rated current Reference amb. temp. (40°C)		In(A)		60, 63					
Rated impulse withstand voltage		Uimp(kV)		6		6		6	
Isolation compliant				●		●		●	
Rated insulation voltage Ui (V)		AC		690		690		690	
		DC		250*1		250*1		250*1	
Rated breaking capacity Icu/Ics (kA)	IEC 60947-2 EN 60947-2 JIS C 8201-2-1	AC	500V	1.5/1		5/3		7.5/4	
			440V	2.5/2		7.5/4		10/5	
			415V	2.5/2		7.5/4		10/5	
			400V	2.5/2		7.5/4		10/5	
			380V	2.5/2		7.5/4		10/5	
			240V	5/3		10/5		25/13	
			230V	5/3		10/5		25/13	
		DC	250V	2.5/2*1		5/3*1		5/3*1	
	GB14048.2	AC	400V	2.5/2		7.5/4		10/5	
			230V	5/3		10/5		25/13	
Conforming to standards	CE Marking			● (TÜV)		● (TÜV)		● (TÜV)	
	CCC certificate			●		●		●	
	Electrical Appliance and Material Safety Law <PS>E*2			●		●		●	
Dimensions (mm) 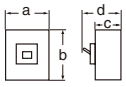			a	50	75	50	75	50	75
			b	100		100		100	
			c	60		60		60	
			d	84		84		84	
Mass (kg)				0.4	0.5	0.4	0.5	0.4	0.5
Tripping device				Hydraulic-magnetic					
Front mounting, front connection			No-mark	○	○	○	○	○	○
Front mounting, rear connection			X	○	○	○	○	○	○
Flush mounting, front connection			E	○	○	○	○	○	○
Flush mounting, top & bottom connection			Y	○	○	○	○	○	○
Plug-in mounting			P	○	○	○	○	○	○
IEC 35mm wide rail mounting			No-mark	○	○	○	○	○	○
Internal accessories			Page B1-63						
Alarm switch			K	○	○	○	○	○	○
Auxiliary switch			W	○	○	○	○	○	○
Undervoltage trip			R	○	○	○	○	○	○
Shunt trip			F	○	○	○	○	○	○
External accessories			Page B1-66						
Handle padlocking device	Cap type		Q1	○	○	○	○	○	○
Handle padlocking device	Plate type		Q2	▲	▲	▲	▲	▲	▲
Operating handle	N-type		N	○	○	○	○	○	○
Operating handle	V-type		V	○	○	○	○	○	○
Terminal cover	Short		BT□S	○	○	○	○	○	○
Terminal cover	Long		BT□L	○	○	○	○	○	○
Insulation barrier	Interphase		BP	○	○	○	○	○	○
	Earth		BL	○	○	○	○	○	○
Handle locking cover			L1	○	○	○	○	○	○
Flat terminal			SS	○	○	○	○	○	○
Block terminal			SL	–	–	–	–	–	–

●: Approved ○: Available –: Not available ▲ : Factory-mounted accessory
Note: *1 Specify DC only when ordering circut breakers for DC circuit.
*2 Electrical Appliance and Material Safety Law of Japan

Fuji Electric FA Components & Systems Co., Ltd.
Information subject to change without notice

■ G-TWIN Standard Series

Ampere frame				100A			
Type				**BW100AAG**		**BW100EAG**	
Pole				2	3	2	3
Rated current Reference amb. temp. (40°C)		In(A)		60, 63, 75, 100		50, 60, 63, 75, 100	
Rated impulse withstand voltage		Uimp(kV)		6		6	
Isolation compliant				●		●	
Rated insulation voltage Ui (V)		AC		500		690	
		DC		–		250*1	
Rated breaking capacity Icu/Ics (kA)	IEC 60947-2 EN 60947-2 JIS C 8201-2-1	AC	500V	–		7.5/4	
			440V	–		10/5	
			415V	–		10/5	
			400V	1.5/1		10/5	
			380V	1.5/1		10/5	
			240V	5/3		25/13	
			230V	5/3		25/13	
		DC	250V	–		5/3*1	
	GB14048.2	AC	400V	1.5/1		10/5	
			230V	5/3		25/13	
Conforming to standards	CE Marking			● (TÜV)		● (TÜV)	
	CCC certificate			●		●	
	Electrical Appliance and Material Safety Law <PS>E*2			●		●	
Dimensions (mm)			a	50	75	50	75
			b	100		100	
			c	60		60	
			d	84		84	
Mass (kg)				0.4	0.5	0.4	0.5
Tripping device				Thermal -magnetic			
Front mounting, front connection			No-mark	○	○	○	○
Front mounting, rear connection			X	○	○	○	○
Flush mounting, front connection			E	○	○	○	○
Flush mounting, top & bottom connection			Y	○	○	○	○
Plug-in mounting			P	○	○	○	○
IEC 35mm wide rail mounting			No-mark	○	○	○	○
Internal accessories			Page B1-63				
Alarm switch			K	○	○	○	○
Auxiliary switch			W	○	○	○	○
Undervoltage trip			R	○	○	○	○
Shunt trip			F	○	○	○	○
External accessories			Page B1-66				
Handle padlocking device	Cap type		Q1	○	○	○	○
Handle padlocking device	Plate type		Q2	▲	▲	▲	▲
Operating handle	N-type		N	○	○	○	○
Operating handle	V-type		V	○	○	○	○
Terminal cover	Short		BT□S	○	○	○	○
Terminal cover	Long		BT□L	○	○	○	○
Insulation barrier	Interphase		BP	○	○	○	○
	Earth		BL	○	○	○	○
Handle locking cover			L1	○	○	○	○
Flat terminal			SS	○	○	○	○
Block terminal			SL	–	–	–	–

●: Approved ○: Available –: Not available ▲ : Factory-mounted accessory
Note: *1 Specify DC only when ordering circut breakers for DC circuit.
*2 Electrical Appliance and Material Safety Law of Japan

Molded Case Circuit Breakers
G-TWIN series Quick reference guide

■ G-TWIN Standard Series

Ampere frame				125A									
Type				**BW125JAG**			**BW125SAG**			**BW125RAG**			**BW125HAG**	
Pole				2	3	4	2	3	4	2	3	4	2	3
Rated current Reference amb. temp. (40°C)		In(A)		15, 20, 30, 40, 50, 60, 75, 100, 125										
Rated impulse withstand voltage		Uimp(kV)		6			6			6			6	
Isolation compliant				●			●			●			●	
Rated insulation voltage Ui (V)		AC		690			690			690			690	
		DC		250			250			250			250	
Rated breaking capacity Icu/Ics (kA)	IEC 60947-2 EN 60947-2 JIS C 8201-2-1	AC	690V	–	–		–			–			–	
			500V	5/3	8/4		10/5			10/5			25/7	
			440V	30/15	30/15		36/18			50/25			65/17	
			415V	30/15	30/15		36/18			50/25			65/17	
			400V	30/15	30/15		36/18			50/25			65/17	
			380V	30/15	30/15		36/18			50/25			65/17	
			240V	50/25	50/25		85/43			100/50			125/63	
			230V	50/25	50/25		85/43			100/50			125/63	
		DC	250V	15/8	15/8		30/15			40/20			40/20	
	GB14048.2	AC	400V	30/15	30/15		36/18			50/25			–	
			230V	50/25	50/25		85/43			100/50			–	
Conforming to standards	CE Marking			● (TÜV)			● (TÜV)			● (TÜV)			●	
	CCC certificate			●			●			●			–	
	Electrical Appliance and Material Safety Law <PS>E*2			● (except for 125A)			● (except for 125A)			● (except for 125A)			● (except for 125A)	
Dimensions (mm) 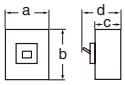			a	60	90	120	90	90	120	90	90	120	90	
			b	155			155			155			155	
			c	68			68			68			68	
			d	95			95			95			95	
Mass (kg)				0.8	1.2	1.6	1.0	1.2	1.6	1.0	1.2	1.6	1.0	1.2
Tripping device				Thermal-magnetic										
Front mounting, front connection			No-mark	○	○	○	○	○	○	○	○	○	○	○
Front mounting, rear connection			X	○	○	○	○	○	○	○	○	○	○	○
Flush mounting, front connection			E	○	○	○	○	○	○	○	○	○	○	○
Plug-in mounting			P	○	○	–	○	○	–	○	○	–	○	○
Internal accessories			Page B1-64											
Alarm switch			K	○	○	○	○	○	○	○	○	○	○	○
Auxiliary switch			W	○	○	○	○	○	○	○	○	○	○	○
Undervoltage trip			R	–	○	○	○	○	○	○	○	○	○	○
Shunt trip			F	○	○	○	○	○	○	○	○	○	○	○
External accessories			Page B1-66											
Handle padlocking device	Cap type		Q1	○	○	○	○	○	○	○	○	○	○	○
Handle padlocking device	Plate type		Q2	–	○	○	○	○	○	○	○	○	○	○
Operating handle	N-type		N	○	○	○	○	○	○	○	○	○	○	○
Operating handle	V-type		V	○	○	○	○	○	○	○	○	○	○	○
Terminal cover	Short		BT□S	○	○	○	○	○	○	○	○	○	○	○
Terminal cover	Long		BT□L	○	○	○	○	○	○	○	○	○	○	○
Insulation barrier	Interphase		BP	○	○	○	○	○	○	○	○	○	○	○
Handle locking cover			L1	○	○	○	○	○	○	○	○	○	○	○
Flat terminal			SS	○	○	○	○	○	○	○	○	○	○	○
Block terminal			SL	○	○	○	○	○	○	○	○	○	○	○

●: Approved ○: Available –: Not available
Note: * Electrical Appliance and Material Safety Law of Japan

■ G-TWIN Standard Series

Ampere frame				160A										
Type				**BW160EAG**		**BW160JAG**			**BW160SAG**			**BW160RAG**		
Pole				2	3	2	3	4	2	3	4	2	3	4
Rated current Reference amb. temp. (40°C)		In(A)		125, 150, 160										
Rated impulse withstand voltage		Uimp(kV)		6		6			6			6		
Isolation compliant				●		●			●			●		
Rated insulation voltage Ui (V)		AC		690		690			690			690		
		DC		250		250			250			250		
Rated breaking capacity Icu/Ics (kA)	IEC 60947-2 EN 60947-2 JIS C 8201-2-1	AC	690V	–		–			–			–		
			500V	5/3		8/4			10/5			10/5		
			440V	18/9		30/15			36/18			50/25		
			415V	18/9		30/15			36/18			50/25		
			400V	18/9		30/15			36/18			50/25		
			380V	18/9		30/15			36/18			50/25		
			240V	36/18		50/25			85/43			100/50		
			230V	36/18		50/25			85/43			100/50		
		DC	250V	10/5		20/10			30/15			30/15		
	GB14048.2	AC	400V	18/9		30/15			36/18			50/25		
			230V	36/18		50/25			85/43			100/50		
Conforming to standards	CE Marking			● (TÜV)		● (TÜV)			● (TÜV)			● (TÜV)		
	CCC certificate			●		●			●			●		
	Electrical Appliance and Material Safety Law <PS>E*			–		–			–			–		
Dimensions (mm)			a	105	105	105	105	140	105	105	140	105	105	140
			b	165		165			165			165		
			c	68		68			68			68		
			d	95		95			95			95		
Mass (kg)				1.4	1.6	1.4	1.6	2.2	1.4	1.6	2.2	1.4	1.6	2.2
Tripping device				Thermal-magnetic										
Front mounting, front connection			No-mark	○	○	○	○	○	○	○	○	○	○	○
Front mounting, rear connection			X	○	○	○	○	○	○	○	○	○	○	○
Flush mounting, front connection			E	○	○	○	○	○	○	○	○	○	○	○
Plug-in mounting			P	○	○	○	○	–	○	○	–	○	○	–
Internal accessories			Page B1-64											
Alarm switch			K	○	○	○	○	○	○	○	○	○	○	○
Auxiliary switch			W	○	○	○	○	○	○	○	○	○	○	○
Undervoltage trip			R	○	○	○	○	○	○	○	○	○	○	○
Shunt trip			F	○	○	○	○	○	○	○	○	○	○	○
External accessories			Page B1-66											
Handle padlocking device	Cap type		Q1	○	○	○	○	○	○	○	○	○	○	○
Handle padlocking device	Plate type		Q2	○	○	○	○	○	○	○	○	○	○	○
Operating handle	N-type		N	○	○	○	○	○	○	○	○	○	○	○
Operating handle	V-type		V	○	○	○	○	○	○	○	○	○	○	○
Terminal cover	Short		BT□S	○	○	○	○	○	○	○	○	○	○	○
Terminal cover	Long		BT□L	○	○	○	○	○	○	○	○	○	○	○
Insulation barrier	Interphase		BP	○	○	○	○	○	○	○	○	○	○	○
Handle locking cover			L1	○	○	○	○	○	○	○	○	○	○	○
Flat terminal			SS	○	○	○	○	○	○	○	○	○	○	○
Block terminal			SL	○	○	○	○	○	○	○	○	○	○	○

●: Approved ○: Available –: Not available
Note: * Electrical Appliance and Material Safety Law of Japan

Molded Case Circuit Breakers
G-TWIN series Quick reference guide

■ G-TWIN Standard Series

Ampere frame				250A												
Type				**BW250EAG**		**BW250JAG**			**BW250SAG**			**BW250RAG**			**BW250HAG**	
Pole				2	3	2	3	4	2	3	4	2	3	4	2	3
Rated current Reference amb. temp. (40°C)		In(A)		175, 200, 225, 250											125,150,160,175 200,225,250	
Rated impulse withstand voltage		Uimp(kV)		6		6			6			6			6	
Isolation compliant				●		●			●			●			●	
Rated insulation voltage Ui (V)		AC		690		690			690			690			690	
		DC		250		250			250			250			250	
Rated breaking capacity Icu/Ics (kA)	IEC 60947-2 EN 60947-2 JIS C 8201-2-1	AC	690V	–		–			–			–			–	
			500V	5/3		8/4			10/5			10/5			25/7	
			440V	18/9		30/15			36/18			50/25			65/17	
			415V	18/9		30/15			36/18			50/25			65/17	
			400V	18/9		30/15			36/18			50/25			65/17	
			380V	18/9		30/15			36/18			50/25			65/17	
			240V	36/18		50/25			85/43			100/50			125/63	
			230V	36/18		50/25			85/43			100/50			125/63	
		DC	250V	10/5		20/10			30/15			30/15			40/20	
	GB14048.2	AC	400V	18/9		30/15			36/18			50/25			–	
			230V	36/18		50/25			85/43			100/50			–	
Conforming to standards	CE Marking			● (TÜV)		● (TÜV)			● (TÜV)			● (TÜV)			●	
	CCC certificate			●		●			●			●			–	
	Electrical Appliance and Material Safety Law <PS>E*			–		–			–			–			–	
Dimensions (mm)			a	105	105	105	105	140	105	105	140	105	105	140	105	
			b	165		165			165			165			165	
			c	68		68			68			68			68	
			d	95		95			95			95			95	
Mass (kg)				1.4	1.6	1.4	1.6	2.2	1.4	1.6	2.2	1.4	1.6	2.2	1.4	1.6
Tripping device				Thermal-magnetic												
Front mounting, front connection			No-mark	○	○	○	○	○	○	○	○	○	○	○	○	○
Front mounting, rear connection			X	○	○	○	○	○	○	○	○	○	○	○	○	○
Flush mounting, front connection			E	○	○	○	○	○	○	○	○	○	○	○	○	○
Plug-in mounting			P	○	○	○	○	–	○	○	–	○	○	–	○	○
Internal accessories			Page B1-64													
Alarm switch			K	○	○	○	○	○	○	○	○	○	○	○	○	○
Auxiliary switch			W	○	○	○	○	○	○	○	○	○	○	○	○	○
Undervoltage trip			R	○	○	○	○	○	○	○	○	○	○	○	○	○
Shunt trip			F	○	○	○	○	○	○	○	○	○	○	○	○	○
External accessories			Page B1-66													
Handle padlocking device	Cap type		Q1	○	○	○	○	○	○	○	○	○	○	○	○	○
Handle padlocking device	Plate type		Q2	○	○	○	○	○	○	○	○	○	○	○	○	○
Operating handle	N-type		N	○	○	○	○	○	○	○	○	○	○	○	○	○
Operating handle	V-type		V	○	○	○	○	○	○	○	○	○	○	○	○	○
Terminal cover	Short		BT□S	○	○	○	○	○	○	○	○	○	○	○	○	○
Terminal cover	Long		BT□L	○	○	○	○	○	○	○	○	○	○	○	○	○
Insulation barrier	Interphase		BP	○	○	○	○	○	○	○	○	○	○	○	○	○
Handle locking cover			L1	○	○	○	○	○	○	○	○	○	○	○	○	○
Flat terminal			SS	○	○	○	○	○	○	○	○	○	○	○	○	○
Block terminal			SL	○	○	○	○	○	○	○	○	○	○	○	○	○

●: Approved ○: Available –: Not available
Note: * Electrical Appliance and Material Safety Law of Japan

■ G-TWIN Standard Series

Ampere frame				400A									
Type				**BW400EAG**		**BW400SAG**		**BW400RAG**			**BW400HAG**		
Pole				2	3	2	3	2	3	4	2	3	4
Rated current Reference amb. temp. (40°C)		In(A)		250, 300, 350, 400									
Rated impulse withstand voltage		Uimp(kV)		8		8		8			8		
Isolation compliant				●		●		●			●		
Rated insulation voltage Ui (V)		AC		690		690		690			690		
		DC		250		250		250			250		
Rated breaking capacity Icu/Ics (kA)	IEC 60947-2 EN 60947-2 JIS C 8201-2-1	AC	690V	–		10/5		15/8			15/8		
			500V	18/9		20/10		36/18			42/21		
			440V	30/15		36/18		50/25			70/35		
			415V	30/15		36/18		50/25			70/35		
			400V	30/15		36/18		50/25			70/35		
			380V	30/15		36/18		50/25			70/35		
			240V	50/25		85/43		100/50			125/63		
			230V	50/25		85/43		100/50			125/63		
		DC	250V	20/10		20/10		40/20			40/20		
	GB14048.2	AC	400V	30/15		36/18		50/25			70/35		
			230V	50/25		85/43		100/50			125/63		
Conforming to standards	CE Marking			● (TÜV)		● (TÜV)		● (TÜV)			● (TÜV)		
	CCC certificate			●		●		●			●		
	Electrical Appliance and Material Safety Law <PS>E*1			–		–		–			–		
Dimensions (mm)			a	140	140	140	140	140	140	185	140	140	185
			b	257		257		257			257		
			c	103		103		103			103		
			d	146		146		146			146		
Mass (kg)				4.6	5.6	4.6	5.6	4.6	5.6	7.4	4.6	5.6	7.4
Tripping device				Thermal-magnetic									
Front mounting, front connection			No-mark	○	○	○	○	○	○	○	○	○	○
Front mounting, rear connection			X	○	○	○	○	○	○	○	○	○	○
Flush mounting, front connection			E	○	○	○	○	○	○	○	○	○	○
Plug-in mounting			P	○	○	○	○	○	○	–	○	○	–
Internal accessories			Page B1-65										
Alarm switch			K	○	○	○	○	○	○	○	○	○	○
Auxiliary switch			W	○	○	○	○	○	○	○	○	○	○
Undervoltage trip			R	○	○	○	○	○	○	○	○	○	○
Shunt trip			F	○	○	○	○	○	○	○	○	○	○
External accessories			Page B1-66										
Handle padlocking device	Cap type		QN	○	○	○	○	○	○	○	○	○	○
Handle padlocking device	Plate type		Q2	○	○	○	○	○	○	○	○	○	○
Operating handle	N-type		N	○	○	○	○	○	○	○	○	○	○
Operating handle	V-type		V	○	○	○	○	○	○	○	○	○	○
Terminal cover	Short		BT□S	○	○	○	○	○	○	○	○	○	○
Terminal cover	Long		BT□L	○	○	○	○	○	○	○	○	○	○
Insulation barrier	Interphase		BP	○	○	○	○	○	○	○	○	○	○
Handle locking cover			L1	○	○	○	○	○	○	○	○	○	○
Flat terminal			SS	○*2	○*2	○*2	○*2	○*2	○*2	○*2	○*2	○*2	○*2
Block terminal			SL	○	○	○	○	○	○	○	○	○	○

●: Approved ○: Available –: Not available
Note: *1 Electrical Appliance and Material Safety Law of Japan
*2 Standard provided

Molded Case Circuit Breakers
G-TWIN series Quick reference guide

■ G-TWIN Standard Series

Ampere frame				630A					800A				
Type				**BW630EAG**	**BW630RAG**		**BW630HAG**		**BW800EAG**	**BW800RAG**		**BW800HAG**	
Pole				3	3	4	3	4	3	3	4	3	4
Rated current Reference amb. temp. (40°C)		In(A)		500, 600, 630					700, 800				
Rated impulse withstand voltage		Uimp(kV)		8	8		8		8	8		8	
Isolation compliant				●	●		●		●	●		●	
Rated insulation voltage Ui (V)		AC		690	690		690		690	690		690	
		DC		250	250		250		250	250		250	
Rated breaking capacity Icu/Ics (kA)	IEC 60947-2 EN 60947-2 JIS C 8201-2-1	AC	690V	–	15/8		15/8		–	15/8		15/8	
			600V	–	–		–		–	–		–	
			500V	18/9	36/18		42/21		18/9	36/18		42/21	
			440V	36/18	50/25		70/35		36/18	50/25		70/35	
			415V	36/18	50/25		70/35		36/18	50/25		70/35	
			400V	36/18	50/25		70/35		36/18	50/25		70/35	
			380V	36/18	50/25		70/35		36/18	50/25		70/35	
			240V	50/25	100/50		125/63		50/25	100/50		125/63	
			230V	50/25	100/50		125/63		50/25	100/50		125/63	
		DC	250V	20/10	40/20		40/20		20/10	40/20		40/20	
	GB14048.2	AC	400V	36/18	50/25		70/35		36/18	50/25		70/35	
			230V	50/25	100/50		125/63		50/25	100/50		125/63	
Conforming to standards	CE Marking			● (TÜV)	● (TÜV)		● (TÜV)		● (TÜV)	● (TÜV)		● (TÜV)	
	CCC certificate			●	●		●		●	●		●	
	Electrical Appliance and Material Safety Law <PS>E*1			–	–		–		–	–		–	
Dimensions (mm)	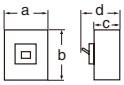		a	210	210	280	210	280	210	210	280	210	280
			b	275	275		275		275	275		275	
			c	103	103		103		103	103		103	
			d	146	146		146		146	146		146	
Mass (kg)				7.8	7.8	10.3	7.8	10.3	8.3	8.3	11	8.3	11
Tripping device				Thermal-magnetic									
Front mounting, front connection			No-mark	○	○	○	○	○	○	○	○	○	○
Front mounting, rear connection			X	○	○	○	○	○	○	○	○	○	○
Flush mounting, front connection			E	○	○	○	○	○	○	○	○	○	○
Plug-in mounting			P	○	○	–	○	–	○	○	–	○	–
Internal accessories			Page B1-65										
Alarm switch			K	○	○		○		○	○		○	
Auxiliary switch			W	○	○		○		○	○		○	
Undervoltage trip			R	○	○		○		○	○		○	
Shunt trip			F	○	○		○		○	○		○	
External accessories			Page B1-66										
Handle padlocking device	Cap type		QN	○	○		○		○	○		○	
Handle padlocking device	Plate type		Q2	○	○		○		○	○		○	
Operating handle	N-type		N	○	○		○		○	○		○	
Operating handle	V-type		V	○	○		○		○	○		○	
Terminal cover	Long		BT□L	○	○		○		○	○		○	
Insulation barrier	Interphase		BP	○	○		○		○	○		○	
Handle locking cover			L1	○	○		○		○	○		○	
Flat terminal			SS	○*2	○*2		○*2		○*2	○*2		○*2	
Block terminal			SL	○	○		○		○	○		○	

●: Approved ○: Available –: Not available
Note: *1 Electrical Appliance and Material Safety Law of Japan
*2 Standard provided

Fuji Electric FA Components & Systems Co., Ltd.
Information subject to change without notice

■ G-TWIN Global Series

Ampere frame				50A				100A	
Type				**BW50RAGU**				**BW100EAGU**	
Pole				2		3		2	3
Rated current Reference amb. temp. (40°C)		In(A)		3, 5	10, 15, 20, 30, 32, 40, 50	3, 5	10, 15, 20, 30, 32, 40, 50	60, 63, 70, 75, 80, 90, 100	
Rated impulse withstand voltage		Uimp(kV)		6				6	
Isolation compliant				●				●	
Rated insulation voltage Ui (V)		AC		690				690	
Rated breaking capacity	IEC 60947-2 EN 60947-2 JIS C 8201-2-1 Icu/Ics (kA)	AC	500V	7.5/4				7.5/4	
			440V	10/5				10/5	
			415V	10/5				10/5	
			400V	10/5				10/5	
			380V	10/5				10/5	
			240V	25/13				25/13	
			230V	25/13				25/13	
	GB14048.2 Icu/Ics(kA)	AC	400V	7/4	10/5	7/4	10/5	10/5	
			230V	14/7	25/13	14/7	25/13	25/13	
	UL489 CAN/CSA C22.2 NO.5 (kA)	AC	240V	14		–		14	
Conforming to standards	CE Marking			● (TÜV)				● (TÜV)	
	CCC certificate			●				●	
	UL Listed (NEMA AB1)			●				●	
	Electrical Appliance and Material Safety Law <PS>E*1			●				●	
Dimensions (inch(mm)) 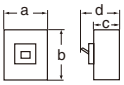			a	1.969 (50)		2.953 (75)		1.969 (50)	2.953 (75)
			b	4.724 (120)				4.724 (120)	
			c	2.362 (60)				2.362 (60)	
			d	3.307 (84)				3.307 (84)	
Mass (kg)				0.5		0.6		0.5	0.6
Tripping device				Hydraulic-magnetic					
Connecting terminal			Page B1-26						
Screw			S□	○		○		○	○
Flat				○		○		○	○
Block				–		–		○	○
Internal accessories			Page B1-63						
Alarm switch			K	○		○		○	○
Auxiliary switch			W	○		○		○	○
Undervoltage trip			R	○		○		○	○
Shunt trip			F	○		○		○	○
External accessories			Page B1-66						
Handle padlocking device Cap type			Q1	○		○		○	○
Operating handle N-type			N	○		○		○	○
Operating handle V-type			V	○		○		○	○
Terminal cover Short			BT□S	○*2		○		○	○
Terminal cover Long			BT□L	○		○		○	○
Insulation barrier Interphase			BP	○		○		○	○
Handle locking cover			L1	○		○		○	○

●: Approved ○: Available –: Not available
Note: *1 Electrical Appliance and Material Safety Law of Japan
*2 Standard provided

Molded Case Circuit Breakers
G-TWIN series Quick reference guide

■ G-TWIN Global Series

Ampere frame				125A			
Type				**BW125JAGU**		**BW125RAGU**	
Pole				2	3	2	3
Rated current Reference amb. temp. (40°C)		In(A)		15, 20, 30, 40, 50, 60, 70, 75, 80, 90, 100, 125			
Rated impulse withstand voltage		Uimp(kV)		6		6	
Isolation compliant				●		●	
Rated insulation voltage Ui (V)		AC		690		690	
		DC		250		250	
Rated breaking capacity	IEC 60947-2 EN 60947-2 JIS C 8201-2-1 Icu/Ics (kA)	AC	690V	–		5/3	
			500V	15/8		36/18	
			440V	30/15		50/25	
			415V	30/15		50/25	
			400V	30/15		50/25	
			380V	30/15		50/25	
			240V	50/25		100/50	
			230V	50/25		100/50	
		DC	250V	15/8		40/20	
	GB14048.2 Icu/Ics(kA)	AC	400V	30/15		50/25	
			230V	50/25		100/50	
	UL489 CAN/CSA C22.2 NO.5 (kA)	AC	600V/Y	10	10	18	
			480V/Δ	–	30	50	
			480V/Y	30	30	50	
			240V	50	50	100	
		DC	125/250V	10	10	10	
Conforming to standards	CE Marking			● (TÜV)		● (TÜV)	
	CCC certificate			●		●	
	UL Listed (NEMA AB1)			●		●	
	Electrical Appliance and Material Safety Law <PS>E*			● (except for 125A)		● (except for 125A)	
Dimensions (inch(mm)) 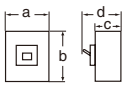			a	2.362 (60)	3.543 (90)	3.543 (90)	
			b	6.732 (171)		6.732 (171)	
			c	2.677 (68)		2.677 (68)	
			d	3.740 (95)		3.740 (95)	
Mass (kg)				0.8	1.2	1.0	1.2
Tripping device				Thermal-magnetic			
Connecting terminal			Page B1-26				
Screw			S□	○	○	○	○
Flat				○	○	○	○
Block				○	○	○	○
Internal accessories			Page B1-64				
Alarm switch			K	○	○	○	○
Auxiliary switch			W	○	○	○	○
Undervoltage trip			R	–	○	○	○
Shunt trip			F	○	○	○	○
External accessories			Page B1-66				
Handle padlocking device	Cap type		Q1	○	○	○	○
Handle padlocking device	Plate type		Q2	○	○	○	○
Operating handle	N-type		N	–	○	○	○
Operating handle	V-type		V	–	○	○	○
Operating handle	F-type		F	–	○	○	○
Terminal cover	Short		BT□S	○	○	○	○
Terminal cover	Long		BT□L	○	○	○	○
Insulation barrier	Interphase		BP	○	○	○	○
Handle locking cover			L1	○	○	○	○

●: Approved ○: Available –: Not available
Note: * Electrical Appliance and Material Safety Law of Japan

■ G-TWIN Global Series

Ampere frame				250A					
Type				**BW250EAGU**		**BW250JAGU**		**BW250RAGU**	
Pole				2	3	2	3	2	3
Rated current Reference amb. temp. (40°C)		In(A)		125, 150, 160, 175, 200, 225, 250					
Rated impulse withstand voltage		Uimp(kV)		6		6		6	
Isolation compliant				●		●		●	
Rated insulation voltage Ui (V)		AC		690		690		690	
		DC		250		250		250	
Rated breaking capacity	IEC 60947-2 EN 60947-2 JIS C 8201-2-1 Icu/Ics (kA)	AC	690V	–		–		5/3	
			500V	10/5		18/9		36/18	
			440V	18/9		30/15		50/25	
			415V	18/9		30/15		50/25	
			400V	18/9		30/15		50/25	
			380V	18/9		30/15		50/25	
			240V	36/18		50/25		100/50	
			230V	36/18		50/25		100/50	
		DC	250V	10/5		20/10		40/20	
	GB14048.2 Icu/Ics(kA)	AC	400V	18/9		30/15		50/25	
			230V	36/18		50/25		100/50	
	UL489 CAN/CSA C22.2 NO.5 (kA)	AC	600V/Y	–		10		25	
			480V/Δ	–		30		50	
			480V/Y	–		30		50	
			240V	22		50		100	
		DC	125/250V	10		10		10	
Conforming to standards	CE Marking			● (TÜV)		● (TÜV)		● (TÜV)	
	CCC certificate			●		●		●	
	UL Listed (NEMA AB1)			●		●		●	
	Electrical Appliance and Material Safety Law <PS>E*			–		–		–	
Dimensions (inch(mm)) 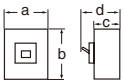			a	4.134 (105)		4.134 (105)		4.134 (105)	
			b	7.126 (181)		7.126 (181)		7.126 (181)	
			c	2.677 (68)		2.677 (68)		2.677 (68)	
			d	3.740 (95)		3.740 (95)		3.740 (95)	
Mass (kg)				1.4	1.6	1.4	1.6	1.4	1.6
Tripping device				Thermal-magnetic					
Connecting terminal			Page B1-26						
Screw			S□	○	○	○	○	○	○
Flat				○	○	○	○	○	○
Block				○	○	○	○	○	○
Internal accessories			Page B1-64						
Alarm switch			K	○	○	○	○	○	○
Auxiliary switch			W	○	○	○	○	○	○
Undervoltage trip			R	○	○	○	○	○	○
Shunt trip			F	○	○	○	○	○	○
External accessories			Page B1-66						
Handle padlocking device	Cap type		Q1	○	○	○	○	○	○
Handle padlocking device	Plate type		Q2	○	○	○	○	○	○
Operating handle	N-type		N	○	○	○	○	○	○
Operating handle	V-type		V	○	○	○	○	○	○
Operating handle	F-type		F	○	○	○	○	○	○
Terminal cover	Short		BT□S	○	○	○	○	○	○
Terminal cover	Long		BT□L	○	○	○	○	○	○
Insulation barrier	Interphase		BP	○	○	○	○	○	○
Handle locking cover			L1	○	○	○	○	○	○

●: Approved ○: Available –: Not available
Note: * Electrical Appliance and Material Safety Law of Japan

Molded Case Circuit Breakers
G-TWIN series Quick reference guide

■ G-TWIN Global Series

Ampere frame				400A						
Type				**BW400EAGU**		**BW400SAGU**		**BW400RAGU**		**BW400HAGU**
Pole				2	3	2	3	2	3	2	3
Rated current Reference amb. temp. (40°C)		In(A)		250, 300, 350, 400						
Rated impulse withstand voltage		Uimp(kV)		8		8		8		8
Isolation compliant				●		●		●		●
Rated insulation voltage Ui (V)		AC		690		690		690		690
		DC		250		250		250		250
Rated breaking capacity	IEC 60947-2 EN 60947-2 JIS C 8201-2-1 Icu/Ics (kA)	AC	690V	–		10/5		15/8		15/8
			500V	18/9		20/10		36/18		42/21
			440V	30/15		36/18		50/25		70/35
			415V	30/15		36/18		50/25		70/35
			400V	30/15		36/18		50/25		70/35
			380V	30/15		36/18		50/25		70/35
			240V	50/25		85/43		100/50		125/63
			230V	50/25		85/43		100/50		125/63
		DC	250V	20/10		20/10		40/20		40/20
	GB14048.2 Icu/Ics(kA)	AC	400V	30/15		36/18		50/25		70/35
			230V	50/25		85/43		100/50		125/63
	UL489 CAN/CSA C22.2 NO.5 (kA)	AC	600V/Δ	–		–		–		25
			600V/Y	–		–		–		25
			480V/Δ	–		35		50		65 (With block terminal:50)
			480V/Y	–		35		50		65 (With block terminal:50)
			240V	22		50		100		125
		DC	125/250V	10		10		10		10
Conforming to standards	CE Marking			● (TÜV)		● (TÜV)		● (TÜV)		● (TÜV)
	CCC certificate			●		●		●		●
	UL Listed (NEMA AB1)			●		●		●		●
	Electrical Appliance and Material Safety Law <PS>E*			–		–		–		–
Dimensions (inch(mm))	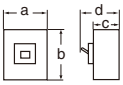		a	5.512 (140)		5.512 (140)		5.512 (140)		5.512 (140)
			b	10.12 (257)		10.12 (257)		10.12 (257)		10.12 (257)
			c	4.055 (103)		4.055 (103)		4.055 (103)		4.055 (103)
			d	5.748 (146)		5.748 (146)		5.748 (146)		5.748 (146)
Mass (kg)				4.6	5.6	4.6	5.6	4.6	5.6	4.6	5.6
Tripping device				Thermal-magnetic						
Connecting terminal		Page B1-26								
Flat				○	○	○	○	○	○	○	○
Block				○	○	○	○	○	○	○	○
Internal accessories		Page B1-65								
Alarm switch		K		○	○	○	○	○	○	○	○
Auxiliary switch		W		○	○	○	○	○	○	○	○
Undervoltage trip		R		○	○	○	○	○	○	○	○
Shunt trip		F		○	○	○	○	○	○	○	○
External accessories		Page B1-66								
Handle padlocking device Cap type		QN		○	○	○	○	○	○	○	○
Handle padlocking device Plate type		Q2		○	○	○	○	○	○	○	○
Operating handle N-type		N		○	○	○	○	○	○	○	○
Operating handle V-type		V		○	○	○	○	○	○	○	○
Operating handle F-type		F		○	○	○	○	○	○	○	○
Terminal cover Short		BT□S		○	○	○	○	○	○	○	○
Terminal cover Long		BT□L		○	○	○	○	○	○	○	○
Insulation barrier Interphase		BP		○	○	○	○	○	○	○	○
Handle locking cover		L1		○	○	○	○	○	○	○	○

●: Approved ○: Available –: Not available
Note: * Electrical Appliance and Material Safety Law of Japan

■ G-TWIN Global Series

Ampere frame				630A		800A	
Type				**BW630RAGU**	**BW630HAGU**	**BW800RAGU**	**BW800HAGU**
Pole				3	3	3	3
Rated current Reference amb. temp. (40°C)		In(A)		500, 600, 630*1		700, 800*2	
Rated impulse withstand voltage		Uimp(kV)		8	8	8	8
Isolation compliant				●	●	●	●
Rated insulation voltage Ui (V)		AC		690	690	690	690
		DC		250	250	250	250
Rated breaking capacity	IEC 60947-2 EN 60947-2 JIS C 8201-2-1 Icu/Ics (kA)	AC	690V	15/8	15/8	15/8	15/8
			500V	36/18	42/21	36/18	42/21
			440V	50/25	70/35	50/25	70/35
			415V	50/25	70/35	50/25	70/35
			400V	50/25	70/35	50/25	70/35
			380V	50/25	70/35	50/25	70/35
			240V	100/50	125/63	100/50	125/63
			230V	100/50	125/63	100/50	125/63
		DC	250V	40/20	40/20	40/20	40/20
	GB14048.2 Icu/Ics(kA)	AC	400V	50/25	70/35	50/25	70/35
			230V	100/50	125/63	100/50	125/63
	UL489 CAN/CSA C22.2 NO.5 (kA)	AC	600V/Δ	–	25	–	25
			600V/Y	–	25	–	25
			480V/Δ	50	65 (With block terminal:50)	50	65 (With block terminal:50)
			480V/Y	–	65 (With block terminal:50)	50	65 (With block terminal:50)
			240V	100	125	100	125
		DC	125/250V	10	10	10	10
Conforming to standards	CE Marking			● (TÜV)	● (TÜV)	● (TÜV)	● (TÜV)
	CCC certificate			●	●	●	●
	UL Listed (NEMA AB1)			●	●	●	●
	Electrical Appliance and Material Safety Law <PS>E*3			–	–	–	–
Dimensions (inch(mm))	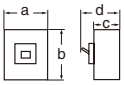		a	8.268 (210)	8.268 (210)	8.268 (210)	8.268 (210)
			b	10.83 (275)	10.83 (275)	10.83 (275)	10.83 (275)
			c	4.055 (103)	4.055 (103)	4.055 (103)	4.055 (103)
			d	5.748 (146)	5.748 (146)	5.748 (146)	5.748 (146)
Mass (kg)				8.9	8.9	9.4	9.4
Tripping device				Thermal-magnetic			
Connecting terminal			Page B1-26				
Flat				○	○	○	○
Block				○	○	○	○
Internal accessories			Page B1-65				
Alarm switch			K	○	○	○	○
Auxiliary switch			W	○	○	○	○
Undervoltage trip			R	○	○	○	○
Shunt trip			F	○	○	○	○
External accessories			Page B1-66				
Handle padlocking device	Cap type		QN	○	○	○	○
Handle padlocking device	Plate type		Q2	○	○	○	○
Operating handle	N-type		N	○	○	○	○
Operating handle	V-type		V	○	○	○	○
Terminal cover			BT□L	○	○	○	○
Insulation barrier	Interphase		BP	○	○	○	○
Handle locking cover			L1	○	○	○	○

●: Approved ○: Available –: Not available

Note: *1 Breakers for 630A cannot be manufactured with block terminals.
*2 Block terminals are standard for Breakers for 800A.
*3 Electrical Appliance and Material Safety Law of Japan

Motor protection breakers

Motors are normally controlled by MCCBs and magnetic starters. In this case the MCCB carries out overcurrent or short-circuit current protection while the starter deals with ON-OFF switching of the motor and offers protection against sustained overload currents. These are the motor breakers which combine the two functions.
FUJI motor breakers are designed to eliminate erroneous operations due to the rush current produced at the time of starting the motor. They will trip in the face of sustained overcurrent when the integrated bimetal relay has operated.

■ G-TWIN Standard Series / Motor protection

Ampere frame				32A		
Type				**BW32AAM**	**BW32SAM**	
Pole				3	2	3
Rated current Reference amb. temp. (40°C)		In(A)		1.4, 2.6, 4, 8, 10, 16, 24, 32	(2), (4), 5, 8, 10, 16	0.7, 1.4, 2, 2.6, 4, 5, 8, 10, 12, 16, 24, 32
Rated impulse withstand voltage		Uimp(kV)		6	6	6
Isolation compliant				●	●	●
Rated insulation voltage Ui (V)		AC		500	690	690
Rated breaking capacity Icu/Ics (kA)	IEC 60947-2 EN 60947-2 JIS C 8201-2-1	AC	690V	–	–	–
			500V	–	1.5/1	1.5/1
			440V	1.5/1	2.5/2	2.5/2
			415V	1.5/1	2.5/2	2.5/2
			400V	1.5/1	2.5/2	2.5/2
			380V	1.5/1	2.5/2	2.5/2
			240V	2.5/2	5/3	5/3
			230V	2.5/2	5/3	5/3
	GB14048.2	AC	400V	1.5/1	2.5/2	2.5/2
			230V	2.5/2	5/3	5/3
Conforming to standards	CE Marking			●	●	●
	CCC certificate			●	●	●
	Electrical Appliance and Material Safety Law <PS>E*2			●	●	●
Dimensions (mm) 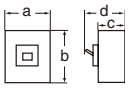			a	75	50	75
			b	100	100	100
			c	60	60	60
			d	84	84	84
Mass (kg)				0.5	0.4	0.5
Tripping device				Hydraulic-magnetic	Hydraulic-magnetic	Hydraulic-magnetic
Front mounting, front connection			No-mark	○	○	○
Front mounting, rear connection			X	○	○	○
Flush mounting, front connection			E	○	○	○
Flush mounting, top & bottom connection			Y	○	○	○
Plug-in mounting			P	○	○	○
IEC 35mm wide rail mounting				○	○	○
Internal accessories			Page B1-63			
Alarm switch			K	○	○	○
Auxiliary switch			W	○	○	○
Undervoltage trip			R	○	○	○
Shunt trip			F	○	○	○
External accessories			Page B1-66			
Handle padlocking device	Cap type		Q1	○	○	○
Handle padlocking device	Plate type		Q2	▲	▲	▲
Operating handle	N-type		N	○	○	○
Operating handle	V-type		V	○	○	○
Terminal cover	Short		BT□S	○	○	○
Terminal cover	Long		BT□L	○	○	○
Insulation barrier	Interphase		BP	○	○	○
Insulation barrier	Earth		BL	○	○	○
Handle locking cover			L1	○	○	○
Flat terminal			SS	○	○	○
Block terminal			SL	–	–	–

●: Approved ○: Available –: Not available ▲ : Factory-mounted accessory
Note: *1 Specify DC only when ordering circuit breakers for DC circuit.
*2 Electrical Appliance and Material Safety Law of Japan

■ G-TWIN Standard Series / Motor protection

Ampere frame				50A		
Type				**BW50EAM**	**BW50SAM**	**BW50RAM**
Pole				3	3	3
Rated current Reference amb. temp. (40°C)		In(A)		24, 32, 40, 45	0.7, 1.4, 2, 2.6, 4, 5, 8, 10, 12, 16, 24, 32, 40, 45	10, 12, 16, 24, 32, 40, 45
Rated impulse withstand voltage		Uimp(kV)		6	6	6
Isolation compliant				●	●	●
Rated insulation voltage Ui (V)		AC		500	690	690
Rated breaking capacity Icu/Ics (kA)	IEC 60947-2 EN 60947-2 JIS C 8201-2-1	AC	690V	–	–	–
			500V	1.5/1	5/3	7.5/4
			440V	2.5/2	7.5/4	10/5
			415V	2.5/2	7.5/4	10/5
			400V	2.5/2	7.5/4	10/5
			380V	2.5/2	7.5/4	10/5
			240V	5/3	10/5	25/13
			230V	5/3	10/5	25/13
	GB14048.2	AC	400V	2.5/2	7.5/4	10/5
			230V	5/3	10/5	25/13
Conforming to standards	CE Marking			●	●	●
	CCC certificate			●	●	●
	Electrical Appliance and Material Safety Law <PS>E*2			●	●	●
Dimensions (mm)	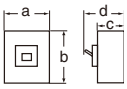		a	75	75	75
			b	100	100	100
			c	60	60	60
			d	84	84	84
Mass (kg)				0.5	0.5	0.5
Tripping device				Hydraulic-magnetic	Hydraulic-magnetic	Hydraulic-magnetic
Front mounting, front connection			No-mark	○	○	○
Front mounting, rear connection			X	○	○	○
Flush mounting, front connection			E	○	○	○
Flush mounting, top & bottom connection			Y	○	○	○
Plug-in mounting			P	○	○	○
IEC 35mm wide rail mounting				○	○	○
Internal accessories			Page B1-63			
Alarm switch			K	○	○	○
Auxiliary switch			W	○	○	○
Undervoltage trip			R	○	○	○
Shunt trip			F	○	○	○
External accessories			Page B1-66			
Handle padlocking device Cap type			Q1	○	○	○
Handle padlocking device Plate type			Q2	▲	▲	▲
Operating handle N-type			N	○	○	○
Operating handle V-type			V	○	○	○
Terminal cover Short			BT□S	○	○	○
Terminal cover Long			BT□L	○	○	○
Insulation barrier Interphase			BP	○	○	○
Insulation barrier Earth			BL	○	○	○
Handle locking cover			L1	○	○	○
Flat terminal			SS	○	○	○
Block terminal			SL	–	–	–

●: Approved ○: Available –: Not available ▲ : Factory-mounted accessory
Note: *1 Specify DC only when ordering circuit breakers for DC circuit.
*2 Electrical Appliance and Material Safety Law of Japan

Molded Case Circuit Breakers
G-TWIN series Quick reference guide

■ G-TWIN Standard Series / Motor protection

Ampere frame				63A		100A
Type				**BW63EAM**	**BW63SAM**	**BW100EAM**
Pole				3	3	3
Rated current Reference amb. temp. (40°C)		In(A)		63	63	63, 75, 90
Rated impulse withstand voltage		Uimp(kV)		6	6	6
Isolation compliant				●	●	●
Rated insulation voltage Ui (V)		AC		690	690	690
Rated breaking capacity Icu/Ics (kA)	IEC 60947-2 EN 60947-2 JIS C 8201-2-1	AC	690V	–	–	–
			500V	1.5/1	5/3	7.5/4
			440V	2.5/2	7.5/4	10/5
			415V	2.5/2	7.5/4	10/5
			400V	2.5/2	7.5/4	10/5
			380V	2.5/2	7.5/4	10/5
			240V	5/3	10/5	25/13
			230V	5/3	10/5	25/13
	GB14048.2	AC	400V	2.5/2	7.5/4	10/5
			230V	5/3	10/5	25/13
Conforming to standards	CE Marking			●	●	●
	CCC certificate			●	●	●
	Electrical Appliance and Material Safety Law <PS>E*2			●	●	●
Dimensions (mm) 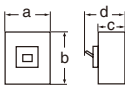			a	75	75	75
			b	100	100	100
			c	60	60	60
			d	84	84	84
Mass (kg)				0.6	0.6	0.6
Tripping device				Hydraulic-magnetic	Hydraulic-magnetic	Hydraulic-magnetic
Front mounting, front connection			No-mark	○	○	○
Front mounting, rear connection			X	○	○	○
Flush mounting, front connection			E	○	○	○
Flush mounting, top & bottom connection			Y	○	○	○
Plug-in mounting			P	○	○	○
IEC 35mm wide rail mounting				○	○	○
Internal accessories			Page B1-63			
Alarm switch			K	○	○	○
Auxiliary switch			W	○	○	○
Undervoltage trip			R	○	○	○
Shunt trip			F	○	○	○
External accessories			Page B1-66			
Handle padlocking device Cap type			Q1	○	○	○
Handle padlocking device Plate type			Q2	▲	▲	▲
Operating handle N-type			N	○	○	○
Operating handle V-type			V	○	○	○
Terminal cover Short			BT□S	○	○	○
Terminal cover Long			BT□L	○	○	○
Insulation barrier Interphase			BP	○	○	○
Insulation barrier Earth			BL			
Handle locking cover			L1	○	○	○
Flat terminal			SS	○	○	○
Block terminal			SL	○	○	○

●: Approved ○: Available –: Not available ▲ : Factory-mounted accessory
Note: *1 Specify DC only when ordering circuit breakers for DC circuit.
*2 Electrical Appliance and Material Safety Law of Japan

Fuji Electric FA Components & Systems Co., Ltd.
Information subject to change without notice

■ G-TWIN Standard Series / Motor protection

Ampere frame				125A		250A		
Type				**BW125JAM**	**BW125RAM**	**BW250EAM**	**BW250JAM**	**BW250RAM**
Pole				3	3	3	3	3
Rated current Reference amb. temp. (40°C)		In(A)		16, 24, 32, 40, 45, 60, 75, 90		125, 150, 175, 225		
Rated impulse withstand voltage		Uimp(kV)		6	6	6	6	6
Isolation compliant				●	●	●	●	●
Rated insulation voltage Ui (V)		AC		690	690	690	690	690
Rated breaking capacity Icu/Ics (kA)	IEC 60947-2 EN 60947-2 JIS C 8201-2-1	AC	690V	–	–	–	–	–
			500V	8/4	10/5	5/3	8/4	10/5
			440V	30/15	50/25	18/9	30/15	50/25
			415V	30/15	50/25	18/9	30/15	50/25
			400V	30/15	50/25	18/9	30/15	50/25
			380V	30/15	50/25	18/9	30/15	50/25
			240V	50/25	100/50	36/18	50/25	100/50
			230V	50/25	100/50	36/18	50/25	100/50
	GB14048.2	AC	400V	30/15	50/25	18/9	30/15	50/25
			230V	50/25	100/50	36/18	50/25	100/50
Conforming to standards	CE Marking			●	●	●	●	●
	CCC certificate			●	●	●	●	●
	Electrical Appliance and Material Safety Law <PS>E*2			●	●	–	–	–
Dimensions (mm)	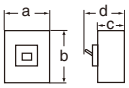		a	90	90	105	105	105
			b	155	155	165	165	165
			c	68	68	68	68	68
			d	95	95	95	95	95
Mass (kg)				1.2	1.2	1.6	1.6	1.6
Tripping device				Thermal-magnetic	Thermal-magnetic	Thermal-magnetic	Thermal-magnetic	Thermal-magnetic
Front mounting, front connection			No-mark	○	○	○	○	○
Front mounting, rear connection			X	○	○	○	○	○
Flush mounting, front connection			E	○	○	○	○	○
Flush mounting, top & bottom connection			Y	○	○	○	○	○
Plug-in mounting			P	○	○	○	○	○
IEC 35mm wide rail mounting				○	○	○	○	○
Internal accessories			Page B1-64					
Alarm switch			K	○	○	○	○	○
Auxiliary switch			W	○	○	○	○	○
Undervoltage trip			R	○	○	○	○	○
Shunt trip			F	○	○	○	○	○
External accessories			Page B1-66					
Handle padlocking device Cap type			Q1	○	○	○	○	○
Handle padlocking device Plate type			Q2	○	○	○	○	○
Operating handle N-type			N	○	○	○	○	○
Operating handle V-type			V	○	○	○	○	○
Terminal cover Short			BT□S	○	○	○	○	○
Terminal cover Long			BT□L	○	○	○	○	○
Insulation barrier Interphase			BP	○	○	○	○	○
Handle locking cover			L1	○	○	○	○	○
Flat terminal			SS	○	○	○	○	○
Block terminal			SL	○	○	○	○	○

●: Approved ○: Available –: Not available ▲ : Factory-mounted accessory
Note: *1 Specify DC only when ordering circuit breakers for DC circuit.
*2 Electrical Appliance and Material Safety Law of Japan

Molded Case Circuit Breakers
G-TWIN series Mounting modifications

■ Mounting modifications

● Standard series

Standard type FUJI breakers are front mounting with front connections. The standard breaker can easily be modified to become front mounting rear connection type, flush mounting type and plug-in type. The additional parts such as insulation bases, barriers, covers and similar parts are added as required.

Front mounting
Front connection

BASIC DESIGN

Additional main parts	Front mounting Rear connection (X type)
Bar stud terminal 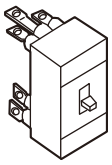	BW32 BW50(A,E,S,R)AG BW63 BW100
Bar stud terminal 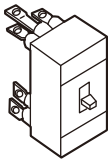	BW50HAG BW125 BW160 BW250 BW400 BW630 BW800 Each stud can be turned by 90°

Additional main parts	Flush mounting Rear connection (E type)
Bar stud terminal 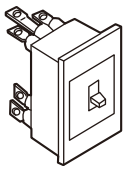	BW32 BW50(A,E,S,R)AG BW63 BW100
Bar stud terminal 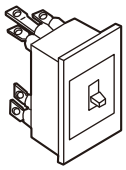	BW50HAG BW125 BW160 BW250 BW400 BW630 BW800 Each stud can be turned by 90°

Additional main parts	Flush mounting Top and bottom connection (Y type)
Decorative flush plate 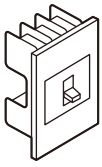	BW32 BW50(A,E,S,R)AG BW63 BW100

Additional main parts	Plug-in mounting (P type)
Bar stud terminal 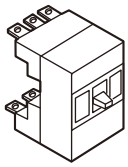	BW32 BW50(A,E,S,R)AG BW63 BW100
Round stud terminal 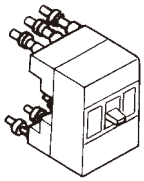	BW50HAG BW125
Bar stud terminal 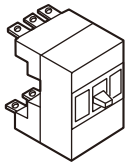	BW160 BW250 BW400 BW630 BW800 Each stud can be turned by 90°

Information subject to change without notice

● **UL489 Listed series**

Front mounting
Front connection

BASIC DESIGN

Screw

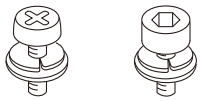

Flat terminal

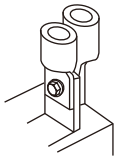

Block terminal

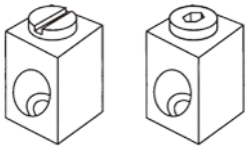

Molded Case Circuit Breakers
G-TWIN series Terminal connection

■ Terminal connection/Front mounting, front connection

● 32AF to 100AF

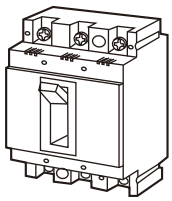

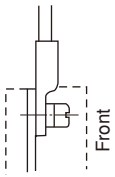

Flat terminal

Self lifting screw	Breaker type	Tightening torque (N•m)	Size
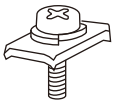	BW32 BW50(A,E,S,R)AG BW100*	2.3 to 2.8	M5×14
Pan-head screw 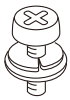	BW63 BW100	5.5 to 7.5	M8×15

* Breaker of rated current : 50A

● 125AF to 250AF

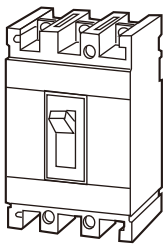

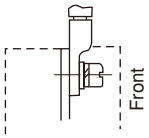

Pan-head screw	Breaker type	Tightening torque (N•m)	Size (mm)
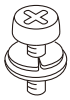	BW50HAG BW125	5.5 to 7.5	M8×16
Hexagonal socket head bolt 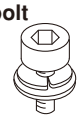	BW160 BW250	8.0 to 13.0	M8×16

• 400AF to 800AF

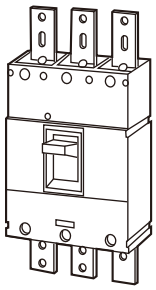

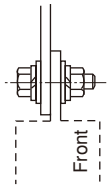

Flat terminal

Hexagonal head bolt	Breaker type	Tightening torque (N•m)	Size (mm)
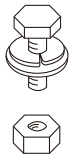	BW400	40 to 50	M12×35
	BW630 BW800	40 to 50	M12×40

Type of connection/up to 250AF
Front mounting front connection

Direct connection

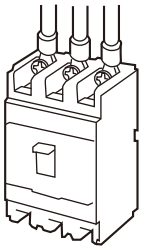

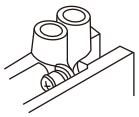

Flat terminal connection
Flat terminals are required.

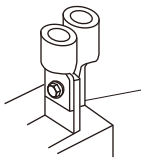

Flat bar studs/1-hole type

Breaker type	Pole	Type of flat terminal
BW32 BW50(A,E,S,R)AG	2 3	**BZ6S10C502** **BZ6S10C503**
BW63 BW100*	2 3	**BZ6S10C1002** **BZ6S10C1003**
BW50HAG BW125	2 3 4	**BW9SS0CA-2** **BW9SS0CA-3** **BW9SS0CA-4**
BW160 BW250	2 3 4	**BZ-S50B-2252** **BZ-S50B-2253** **BW9SS0GA-4**

* BW100 breaker of rated current 50A: BZ6S10C502 or 503.

Fuji Electric FA Components & Systems Co., Ltd.
Information subject to change without notice

Molded Case Circuit Breakers
G-TWIN series Wire size and terminal

■ Wire size and crimp terminal

The following is the size recommendations for crimp terminals.

Crimp terminal R : JIS C2805
CB : JEM-1399
JST : Product of Japan Crimp Terminal Co., Ltd.

Ampere frame	Breaker	Wire size(mm^2)										
		1.04 | 2.63	2.63 | 6.64	6.64 | 10.52	10.52 | 16.78	16.78 | 26.66	26.66 | 42.42	42.42 | 60.57	96.3 | 117.2	117.2 | 152.05	192.6 | 242.27	242.27 | 325
32	BW32	R2-5	R5.5-5	R8-5	R14-5							
50	BW50AAG,EAG,SAG,RAG	R2-5	R5.5-5	R8-5	R14-5							
	BW50HAG	R2-8	R5.5-8	R8-8	R14-8	R22-8	JST38-S8	CB60-8				
63	BW63	R2-8	R5.5-8	R8-8	R14-8	JST22-S8						
100	BW100	R2-8	R5.5-8	R8-8	R14-8	JST22-S8	JST38-S8					
125	BW125	R2-8	R5.5-8	R8-8	R14-8	R22-8	JST38-S8	CB60-8				
160 250	BW160 BW250					R22-8	R38-8	R60-8	CB100-8			
400	BW400						R38-12	R60-12	R100-12	R150-12	R200-12	JST325-12
630	BW630								R100-12	R150-12	R200-12	JST325-12
800	BW800								R100-12	R150-12	R200-12	JST325-12

■ Breaker termination

● Standard

MCCB type	Front connection	Rear connection **X**	Flush mounting **E**	**Y**	Plug-in mounting **P**
BW32 BW50(A,E,S,R)AG	Self-lifiting terminal				
BW63 BW100	Flat terminal				
BW50HAG BW125		90˚ rotational stud	90˚ rotational stud	—	
BW160 BW250	Flat terminal				90˚ rotational stud
BW400 BW630 BW800	Flat terminal				

Molded Case Circuit Breakers
G-TWIN series Wire size and terminal

■ Notes on wiring (UL489 Listed series)

Notes on connecting wires (conductors)

- Connect wires to the UL breaker according to NEC (National Electric Code) or CEC (Canadian Electrical Code) Part 1.
- Use 75°C copper wires for wiring. UL-certified or CSA-certified wires are recommended.
- If a large current (for example, a short-circuit current) flows, it causes a huge electromagnetic force between wires. Therefore, be sure to secure the wires sufficiently.
- Re-tighten terminal screws periodically.

	Terminal position		Applicable breaker type		
Code	Line	Load	BW50	BW100, 125, 250	BW400, 630, 800
Blank	Screw	Screw	●	●	–
Blank	Flat teminal	Flat teminal	–	–	●
SB	Block terminal	Block terminal	–	●	●
SF	Flat teminal	Flat teminal	●	●	–
S3	Screw	Flat terminal	●	●	–
S4	Flat teminal	Screw	●	●	–
S5	Screw	Block terminal	–	●	–
S6	Block terminal	Screw	–	●	–
S7	Flat teminal	Block terminal	–	●	●
S8	Block terminal	Flat terminal	–	●	●

Block terminal connection

- Choose from the stranded wires shown in Table.

Wire size: AWG or MCM [mm^2]	No. of wires stranded
14 to 2 [2.1 to 33.6]	7
1 to 4/0 [42.4 to 107.2]	19
250 to 500 [127 to 250]	37

Values in [ ] are those converted from AWG or MCM sizes to mm^2.

* See the instruction manual that comes with the breaker for more details.

Precautions

- Two wires of different sizes cannot be connected to the same block terminal.
- Be sure to use stranded wires according to Table "Number of wires stranded."
- Multi-conductor wires cannot be connected.
- Do not solder wires together.

Wire size and crimp terminal

● Crimp terminal connection

MCCB	Rated current (A)	Applicable crimp terminal 75˚C wire: J.S.T Mfg. Co., Ltd.	Nichifu Co., Ltd.	Daido Solderless Terminal Mfg. Co., Ltd.	Connectable wire size (AWG) 75˚C wire	Tightening torque (N•m)	Type of screw head and size (mm)
BW50RAGU	3	R2-5	R2-5M R2-5	2-S5, 2-5	14AWG	2.3-2.8	Cross/straight slotted pan-head screw M5 x 14
	5						
	10						
	15						
	20	R5.5-5	R3.5-5S, R3.5-5L, 5.5-6N, R5.5-5S, R5.5-5	3.5-5, 5.5-S5, 5.5-5, 5.5-L5	12AWG		
	30				10AWG		
	40	R8-5	R8-5S, R8-5	8-S5, 8-5	8AWG		
	50						
BW100EAGU	60	R14-8	R14-8S, R14-8	R14-S8, R14-8	6AWG	5.5-7.5	Cross/straight slotted pan-head screw M8 x 15
	75	22-S8	R22-8S, R22-8	R22-S8, 22-8	4AWG		
	100	38-S8	R38-8S	38-S8	3AWG		
BW125JAGU BW125RAGU	15	R2-8	R2-8	2-8, 2-B8	14AWG	5.8 (5.3-6.4)	Cross/straight slotted pan-head screw M8 x 16
	20	5.5-S8, R5.5-8	R3.5-8, R5.5-8	3.5-8, 5.5-8	12AWG		
	30		R5.5-8	5.5-8	10AWG		
	40	8-8NS, R8-8	R8-8	8-8	8AWG		
	50						
	60	14-8NS, 14-S8, R14-8	R14-8S, R14-8	14-S8, 14-8	6AWG		
	70	22-S8, R22-8, CB22-S8	R22-8S, R22-8, CB22-8S	22-S8, 22-8, CB22-8	4AWG		
	75						
	80						
	90	38-S8	R38-8S	38-S8	3AWG		
	100						
	125				1AWG		
BW250EAGU BW250JAGU BW250RAGU	125	38-S8, R38-8	R38-8S, R38-8	38-S8, 38-8	1AWG	10.5 (8-13)	Hexagon socket head bolt M8 x 16
	150	60-S8, R60-8	R60-8, CB60-8, CB60-8S	60-8, CB60-8	1/0AWG		
	175	70-8	R70-8	70-8	2/0AWG		
	200	CB80-S8		CB80-8	3/0AWG		
	225	CB100-S8		CB100-8	4/0AWG		
	250	CB150-S8	CB150-8	CB150-8	250MCM		

Notes: • AWG/MCM is the UL approved wire unit.
• The allowable temperature of wire is 75˚C. (UL CSA approved)
• Be sure to use UL-certified or CSA-certified crimp tools commercially available.

Molded Case Circuit Breakers
G-TWIN series Wire size and terminal

● Flat terminal connection

MCCB	Rated current (A)	Applicable crimp terminal 75˚C wire			Connectable wire size (AWG)	Tightening torque (N•m)		Type of screw head and size (mm)
		J.S.T Mfg. Co., Ltd.	Nichifu Co., Ltd.	Daido Solderless Terminal Mfg. Co., Ltd.	75˚C wire	Wire side	MCCB side	
BW50RAGU	3	R2-5	R2-5M	2-S5, 2-5	14AWG	3.5 to 4.5	2.3 to 2.8	Hexagon socket head bolt M5 x 16
	5		R2-5					
	10							
	15							
	20	R5.5-5	R3.5-5S, R3.5-5L, 5.5-6N.	3.5-5, 5.5-S5	12AWG			
	30		R5.5-5S, R5.5-5	5.5-5, 5.5-L5	10AWG			
	40	R8-5	R8-5S, R8-5	8-S5, 8-5	8AWG			
	50							
BW100EAGU	60	R14-8	R14-8S, R14-8	R14-S8, R14-8	6AWG	8 to 10	5.5 to 7.5	Hexagon socket head bolt M8 x 22
	75	22-S8	R22-8S, R22-8	R22-S8, 22-8	4AWG			
	100	38-S8	R38-8S	38-S8	3AWG			
BW125JAGU BW125RAGU	15	R2-8	R2-8	2-8, 2-B8	14AWG	9 (8 to 10)	5.8 (5.3 to 6.4)	Cross/straight slotted pan-head screw M8 x 16
	20	5.5-S8, R5.5-8	R3.5-8, R5.5-8	3.5-8, 5.5-8	12AWG			
	30		R5.5-8	5.5-8	10AWG			
	40	8-8NS, R8-8	R8-8	8-8	8AWG			
	50							
	60	14-8NS, 14-S8, R14-8	R14-8S, R14-8	14-S8, 14-8	6AWG			
	70	22-S8, R22-8, CB22-S8	R22-8S, R22-8, CB22-8S	22-S8, 22-8, CB22-8	4AWG			
	75							
	80							
	90	38-S8	R38-8S	38-S8	3AWG			
	100							
	125				1AWG			
BW250EAGU BW250JAGU BW250RAGU	125	38-S8, R38-8	R38-8S, R38-8	38-S8, 38-8	1AWG	9 (8 to 10)	10.5 (8 to 13)	Hexagon socket head bolt M8 x 16
	150	60-S8, R60-8	R60-8, CB60-8, CB60-8S	60-8, CB60-8	1/0AWG			
	175	70-8	R70-8	70-8	2/0AWG			
	200	CB80-S8		CB80-8	3/0AWG			
	225	CB100-S8		CB100-8	4/0AWG			
	250	CB150-S8	CB150-8	CB150-8	250MCM			
BW400EAGU BW400SAGU BW400RAGU BW400HAGU	250	150-12	R150-12		250MCM	45 (40 to 50)	43.5 (39.2 to 48)	Hexagon head bolt M12 x 35
	300	180-12	R180-12		350MCM			
	350	325-12	R325-12N		500MCM			
	400	325-12	R325-12N		500MCM			
		R80-12	R80-12		3/0AWG(x2)			
BW630RAGU BW630HAGU	500	R150-12		R150-12	250MCM(x2)	47.04 (42.4 to 51.7)	47.04 (42.4 to 51.7)	Hexagon head bolt M12 x 40
	600	180-12		R180-12	350MCM(x2)			
	630	325-12	R325-12N	R325-12 □	500MCM(x2)			
BW800RAGU BW800HAGU	700	325-12		R325-12 □	500MCM(x2)	47.04 (42.4 to 51.7)	47.04 (42.4 to 51.7)	Hexagon head bolt M12 x 40

Notes: • AWG/MCM is the UL approved wire unit.
• The allowable temperature of wire is 75˚C. (UL CSA approved)

Molded Case Circuit Breakers
G-TWIN series Wire size and terminal

● Block terminal connection

MCCB	Rated current (A)	Connectable wire size (AWG)	Tightening torque (N•m)	Type of screw head and size (mm)	Figure
BW100EAGU	60	6AWG	5.8 (5.5 to 6.5)	Slotted set screw	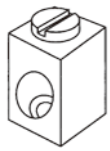
	70	4AWG			
	75				
	80				
	90	3AWG			
	100				
BW125JAGU BW125RAGU	15	14AWG	5.8 (5.8 to 6.4)	Slotted set screw	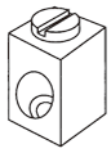
	20	12AWG			
	30	10AWG			
	40	8AWG			
	50				
	60	6AWG			
	70	4AWG			
	75				
	80				
	90	3AWG			
	100				
	125	1AWG			
BW250EAGU BW250JAGU BW250RAGU	125	1AWG	23 (23 to 25.3)	Hexagon socket head setscrew: 8 mm (5/16 inch)	Screw head size 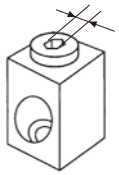
	150	1/0AWG			
	175	2/0AWG			
	200	3/0AWG			
	225	4/0AWG			
	250	250MCM			
BW400EAGU BW400SAGU BW400RAGU BW400HAGU	250	250MCM	43.5 (43.5 to 48)	Hexagon socket head setscrew: 9.53 mm (3/8 inch)	
	300	350MCM			
	350	500MCM			
	400	3/0AWG(x2)	31.9 (31.9 to 35.1)	Hexagon socket head setscrew: 8 mm (5/16 inch)	
BW630RAGU BW630HAGU	500	250MCM(x2)	31.1 (31.1 to 34.2)	Hexagon socket head setscrew: 8 mm (5/16 inch)	
	600	350MCM(x2)			
BW800RAGU BW800HAGU	700	500MCM(x2)	31.1 (31.1 to 34.2)	Hexagon socket head setscrew: 8 mm (5/16 inch)	
	800	300MCM(x3)			

Notes: • AWG/MCM is the UL approved wire unit.
• The allowable temperature of wire is 75˚C. (UL CSA approved)

Molded Case Circuit Breakers
G-TWIN series Type number/Line protection

■ Type number, Standard series (Line protection)

● AAG series, 2-pole IEC/EN/GB/JIS conformed

Breaker ampere frame	Rated current (A)	Type	□: Available mounting and connection
32	3	BW32AAG-2P003□	Blank, X, E, Y, P
	5	BW32AAG-2P005□	
	10	BW32AAG-2P010□	
	15	BW32AAG-2P015□	
	20	BW32AAG-2P020□	
	30	BW32AAG-2P030□	
	32	BW32AAG-2P032□	
50	5	BW50AAG-2P005□	Blank, X, E, Y, P
	10	BW50AAG-2P010□	
	15	BW50AAG-2P015□	
	20	BW50AAG-2P020□	
	30	BW50AAG-2P030□	
	32	BW50AAG-2P032□	
	40	BW50AAG-2P040□	
	50	BW50AAG-2P050□	

Mounting	Connection	□
Front	Front	Blank
Front	Rear	X
Flush	Rear	E
Flush	Top and bottom	Y
Plug-in		P

● EAG series, 2-pole IEC/EN/GB/JIS conformed

Breaker ampere frame	Rated current (A)	Type	□: Available mounting and connection
50	5	BW50EAG-2P005□	Blank, X, E, Y, P
	10	BW50EAG-2P010□	
	15	BW50EAG-2P015□	
	20	BW50EAG-2P020□	
	30	BW50EAG-2P030□	
	32	BW50EAG-2P032□	
	40	BW50EAG-2P040□	
	50	BW50EAG-2P050□	
63	60	BW63EAG-2P060□	Blank, X, E, Y, P
	63	BW63EAG-2P063□	
100	50	BW100EAG-2P050□	Blank, X, E, Y, P
	60	BW100EAG-2P060□	
	63	BW100EAG-2P063□	
	75	BW100EAG-2P075□	
	100	BW100EAG-2P100□	
160	125	BW160EAG-2P125□	Blank, X, E, P
	150	BW160EAG-2P150□	
	160	BW160EAG-2P160□	
250	175	BW250EAG-2P175□	Blank, X, E, P
	200	BW250EAG-2P200□	
	225	BW250EAG-2P225□	
	250	BW250EAG-2P250□	
400	250	BW400EAG-2P250□	Blank, X, E, P
	300	BW400EAG-2P300□	
	350	BW400EAG-2P350□	
	400	BW400EAG-2P400□	

● JAG series, 2-pole IEC/EN/GB/JIS conformed

Breaker ampere frame	Rated current (A)	Type	□: Available mounting and connection
125	15	BW125JAG-2P015□	Blank, X, E, P
	20	BW125JAG-2P020□	
	30	BW125JAG-2P030□	
	40	BW125JAG-2P040□	
	50	BW125JAG-2P050□	
	60	BW125JAG-2P060□	
	75	BW125JAG-2P075□	
	100	BW125JAG-2P100□	
	125	BW125JAG-2P125□	
160	125	BW160JAG-2P125□	Blank, X, E, P
	150	BW160JAG-2P150□	
	160	BW160JAG-2P160□	
250	175	BW250JAG-2P175□	Blank, X, E, P
	200	BW250JAG-2P200□	
	225	BW250JAG-2P225□	
	250	BW250JAG-2P250□	

Molded Case Circuit Breakers
G-TWIN series Type number/Line protection

● SAG series, 2-pole IEC/EN/GB/JIS conformed

Breaker ampere frame	Rated current (A)	Type	□: Available mounting and connection*
32	3	BW32SAG-2P003□	Blank, X, E, Y, P
	5	BW32SAG-2P005□	
	10	BW32SAG-2P010□	
	15	BW32SAG-2P015□	
	20	BW32SAG-2P020□	
	30	BW32SAG-2P030□	
	32	BW32SAG-2P032□	
50	5	BW50SAG-2P005□	Blank, X, E, Y, P
	10	BW50SAG-2P010□	
	15	BW50SAG-2P015□	
	20	BW50SAG-2P020□	
	30	BW50SAG-2P030□	
	32	BW50SAG-2P032□	
	40	BW50SAG-2P040□	
	50	BW50SAG-2P050□	
63	60	BW63SAG-2P060□	Blank, X, E, Y, P
	63	BW63SAG-2P063□	
125	15	BW125SAG-2P015□	Blank, X, E, P
	20	BW125SAG-2P020□	
	30	BW125SAG-2P030□	
	40	BW125SAG-2P040□	
	50	BW125SAG-2P050□	
	60	BW125SAG-2P060□	
	75	BW125SAG-2P075□	
	100	BW125SAG-2P100□	
	125	BW125SAG-2P125□	
160	125	BW160SAG-2P125□	Blank, X, E, P
	150	BW160SAG-2P150□	
	160	BW160SAG-2P160□	
250	175	BW250SAG-2P175□	Blank, X, E, P
	200	BW250SAG-2P200□	
	225	BW250SAG-2P225□	
	250	BW250SAG-2P250□	
400	250	BW400SAG-2P250□	Blank, X, E, P
	300	BW400SAG-2P300□	
	350	BW400SAG-2P350□	
	400	BW400SAG-2P400□	

● HAG series, 2-pole IEC/EN/GB/JIS conformed

Breaker ampere frame	Rated current (A)	Type	□: Available mounting and connection*
400	250	BW400HAG-2P250□	Blank, X, E, P
	300	BW400HAG-2P300□	
	350	BW400HAG-2P350□	
	400	BW400HAG-2P400□	

● RAG series, 2-pole IEC/EN/GB/JIS conformed

Breaker ampere frame	Rated current (A)	Type	□: Available mounting and connection*
50	10	BW50RAG-2P010□	Blank, X, E, Y, P
	15	BW50RAG-2P015□	
	20	BW50RAG-2P020□	
	30	BW50RAG-2P030□	
	32	BW50RAG-2P032□	
	40	BW50RAG-2P040□	
	50	BW50RAG-2P050□	
63	60	BW63RAG-2P060□	Blank, X, E, Y, P
	63	BW63RAG-2P063□	
125	15	BW125RAG-2P015□	Blank, X, E, P
	20	BW125RAG-2P020□	
	30	BW125RAG-2P030□	
	40	BW125RAG-2P040□	
	50	BW125RAG-2P050□	
	60	BW125RAG-2P060□	
	75	BW125RAG-2P075□	
	100	BW125RAG-2P100□	
	125	BW125RAG-2P125□	
160	125	BW160RAG-2P125□	Blank, X, E, P
	150	BW160RAG-2P150□	
	160	BW160RAG-2P160□	
250	175	BW250RAG-2P175□	Blank, X, E, P
	200	BW250RAG-2P200□	
	225	BW250RAG-2P225□	
	250	BW250RAG-2P250□	
400	250	BW400RAG-2P250□	Blank, X, E, P
	300	BW400RAG-2P300□	
	350	BW400RAG-2P350□	
	400	BW400RAG-2P400□	

● HAG series, 2-pole IEC/EN/JIS conformed

Breaker ampere frame	Rated current (A)	Type	□: Available mounting and connection*
50	15	BW50HAG-2P015□	Blank, X, E, P
	20	BW50HAG-2P020□	
	30	BW50HAG-2P030□	
	40	BW50HAG-2P040□	
	50	BW50HAG-2P050□	
125	15	BW125HAG-2P015□	Blank, X, E, P
	20	BW125HAG-2P020□	
	30	BW125HAG-2P030□	
	40	BW125HAG-2P040□	
	50	BW125HAG-2P050□	
	60	BW125HAG-2P060□	
	75	BW125HAG-2P075□	
	100	BW125HAG-2P100□	
	125	BW125HAG-2P125□	
250	125	BW250HAG-2P125□	Blank, X, E, P
	150	BW250HAG-2P150□	
	160	BW250HAG-2P160□	
	175	BW250HAG-2P175□	
	200	BW250HAG-2P200□	
	225	BW250HAG-2P225□	
	250	BW250HAG-2P250□	

* *See page B1-29.*

Molded Case Circuit Breakers
G-TWIN series Type number/Line protection

● AAG series, 3-pole IEC/EN/GB/JIS conformed

Breaker ampere frame	Rated current (A)	Type	□: Available mounting and connection*
32	3	BW32AAG-3P003□	Blank, X, E, Y, P
	5	BW32AAG-3P005□	
	10	BW32AAG-3P010□	
	15	BW32AAG-3P015□	
	20	BW32AAG-3P020□	
	30	BW32AAG-3P030□	
	32	BW32AAG-3P032□	
50	5	BW50AAG-3P005□	Blank, X, E, Y, P
	10	BW50AAG-3P010□	
	15	BW50AAG-3P015□	
	20	BW50AAG-3P020□	
	30	BW50AAG-3P030□	
	32	BW50AAG-3P032□	
	40	BW50AAG-3P040□	
	50	BW50AAG-3P050□	
100	60	BW100AAG-3P060□	Blank, X, E, Y, P
	63	BW100AAG-3P063□	
	75	BW100AAG-3P075□	
	100	BW100AAG-3P100□	

● EAG series, 3-pole IEC/EN/GB/JIS conformed

Breaker ampere frame	Rated current (A)	Type	□: Available mounting and connection*
50	5	BW50EAG-3P005□	Blank, X, E, Y, P
	10	BW50EAG-3P010□	
	15	BW50EAG-3P015□	
	20	BW50EAG-3P020□	
	30	BW50EAG-3P030□	
	32	BW50EAG-3P032□	
	40	BW50EAG-3P040□	
	50	BW50EAG-3P050□	
63	60	BW63EAG-3P060□	Blank, X, E, Y, P
	63	BW63EAG-3P063□	
100	50	BW100EAG-3P050□	Blank, X, E, Y, P
	60	BW100EAG-3P060□	
	63	BW100EAG-3P063□	
	75	BW100EAG-3P075□	
	100	BW100EAG-3P100□	
160	125	BW160EAG-3P125□	Blank, X, E, P
	150	BW160EAG-3P150□	
	160	BW160EAG-3P160□	
250	175	BW250EAG-3P175□	Blank, X, E, P
	200	BW250EAG-3P200□	
	225	BW250EAG-3P225□	
	250	BW250EAG-3P250□	
400	250	BW400EAG-3P250□	Blank, X, E, P
	300	BW400EAG-3P300□	
	350	BW400EAG-3P350□	
	400	BW400EAG-3P400□	
630	500	BW630EAG-3P500□	Blank, X, E, P
	600	BW630EAG-3P600□	
	630	BW630EAG-3P630□	
800	700	BW800EAG-3P700□	Blank, X, E, P
	800	BW800EAG-3P800□	

● JAG series, 3-pole IEC/EN/GB/JIS conformed

Breaker ampere frame	Rated current (A)	Type	□: Available mounting and connection*
125	15	BW125JAG-3P015□	Blank, X, E, P
	20	BW125JAG-3P020□	
	30	BW125JAG-3P030□	
	40	BW125JAG-3P040□	
	50	BW125JAG-3P050□	
	60	BW125JAG-3P060□	
	75	BW125JAG-3P075□	
	100	BW125JAG-3P100□	
	125	BW125JAG-3P125□	
160	125	BW160JAG-3P125□	Blank, X, E, P
	150	BW160JAG-3P150□	
	160	BW160JAG-3P160□	
250	175	BW250JAG-3P175□	Blank, X, E, P
	200	BW250JAG-3P200□	
	225	BW250JAG-3P225□	
	250	BW250JAG-3P250□	

** See page B1-29.*

Molded Case Circuit Breakers
G-TWIN series Type number/Line protection

● SAG series, 3-pole IEC/EN/GB/JIS conformed

Breaker ampere frame	Rated current (A)	Type	□: Available mounting and connection*
32	3	BW32SAG-3P003□	Blank, X, E, Y, P
	5	BW32SAG-3P005□	
	10	BW32SAG-3P010□	
	15	BW32SAG-3P015□	
	20	BW32SAG-3P020□	
	30	BW32SAG-3P030□	
	32	BW32SAG-3P032□	
50	5	BW50SAG-3P005□	Blank, X, E, Y, P
	10	BW50SAG-3P010□	
	15	BW50SAG-3P015□	
	20	BW50SAG-3P020□	
	30	BW50SAG-3P030□	
	32	BW50SAG-3P032□	
	40	BW50SAG-3P040□	
	50	BW50SAG-3P050□	
63	60	BW63SAG-3P060□	Blank, X, E, Y, P
	63	BW63SAG-3P063□	
125	15	BW125SAG-3P015□	Blank, X, E, P
	20	BW125SAG-3P020□	
	30	BW125SAG-3P030□	
	40	BW125SAG-3P040□	
	50	BW125SAG-3P050□	
	60	BW125SAG-3P060□	
	75	BW125SAG-3P075□	
	100	BW125SAG-3P100□	
	125	BW125SAG-3P125□	
160	125	BW160SAG-3P125□	Blank, X, E, P
	150	BW160SAG-3P150□	
	160	BW160SAG-3P160□	
250	175	BW250SAG-3P175□	Blank, X, E, P
	200	BW250SAG-3P200□	
	225	BW250SAG-3P225□	
	250	BW250SAG-3P250□	
400	250	BW400SAG-3P250□	Blank, X, E, P
	300	BW400SAG-3P300□	
	350	BW400SAG-3P350□	
	400	BW400SAG-3P400□	

● RAG series, 3-pole IEC/EN/GB/JIS conformed

Breaker ampere frame	Rated current (A)	Type	□: Available mounting and connection*
50	10	BW50RAG-3P010□	Blank, X, E, Y, P
	15	BW50RAG-3P015□	
	20	BW50RAG-3P020□	
	30	BW50RAG-3P030□	
	32	BW50RAG-3P032□	
	40	BW50RAG-3P040□	
	50	BW50RAG-3P050□	
63	60	BW63RAG-3P060□	Blank, X, E, Y, P
	63	BW63RAG-3P063□	
125	15	BW125RAG-3P015□	Blank, X, E, P
	20	BW125RAG-3P020□	
	30	BW125RAG-3P030□	
	40	BW125RAG-3P040□	
	50	BW125RAG-3P050□	
	60	BW125RAG-3P060□	
	75	BW125RAG-3P075□	
	100	BW125RAG-3P100□	
	125	BW125RAG-3P125□	
160	125	BW160RAG-3P125□	Blank, X, E, P
	150	BW160RAG-3P150□	
	160	BW160RAG-3P160□	
250	175	BW250RAG-3P175□	Blank, X, E, P
	200	BW250RAG-3P200□	
	225	BW250RAG-3P225□	
	250	BW250RAG-3P250□	
400	250	BW400RAG-3P250□	Blank, X, E, P
	300	BW400RAG-3P300□	
	350	BW400RAG-3P350□	
	400	BW400RAG-3P400□	
630	500	BW630RAG-3P500□	Blank, X, E, P
	600	BW630RAG-3P600□	
	630	BW630RAG-3P630□	
800	700	BW800RAG-3P700□	Blank, X, E, P
	800	BW800RAG-3P800□	

● HAG series, 3-pole IEC/EN/GB/JIS conformed

Breaker ampere frame	Rated current (A)	Type	□: Available mounting and connection*
400	250	BW400HAG-3P250□	Blank, X, E, P
	300	BW400HAG-3P300□	
	350	BW400HAG-3P350□	
	400	BW400HAG-3P400□	
630	500	BW630HAG-3P500□	Blank, X, E, P
	600	BW630HAG-3P600□	
	630	BW630HAG-3P630□	
800	700	BW800HAG-3P700□	Blank, X, E, P
	800	BW800HAG-3P800□	

** See page B1-29.*

Molded Case Circuit Breakers
G-TWIN series Type number/Line protection

● JAG series, 4-pole IEC/EN/GB/JIS conformed

Breaker ampere frame	Rated current (A)	Type	□: Available mounting and connection*
125	15	BW125JAG-4P015□	Blank, X, E
	20	BW125JAG-4P020□	
	30	BW125JAG-4P030□	
	40	BW125JAG-4P040□	
	50	BW125JAG-4P050□	
	60	BW125JAG-4P060□	
	75	BW125JAG-4P075□	
	100	BW125JAG-4P100□	
	125	BW125JAG-4P125□	
160	125	BW160JAG-4P125□	Blank, X, E
	150	BW160JAG-4P150□	
	160	BW160JAG-4P160□	
250	175	BW250JAG-4P175□	Blank, X, E
	200	BW250JAG-4P200□	
	225	BW250JAG-4P225□	
	250	BW250JAG-4P250□	

● SAG series, 4-pole IEC/EN/GB/JIS conformed

Breaker ampere frame	Rated current (A)	Type	□: Available mounting and connection*
125	15	BW125SAG-3P015□	Blank, X, E
	20	BW125SAG-3P020□	
	30	BW125SAG-3P030□	
	40	BW125SAG-3P040□	
	50	BW125SAG-3P050□	
	60	BW125SAG-3P060□	
	75	BW125SAG-3P075□	
	100	BW125SAG-3P100□	
	125	BW125SAG-3P125□	
160	125	BW160SAG-3P125□	Blank, X, E
	150	BW160SAG-3P150□	
	160	BW160SAG-3P160□	
250	175	BW250SAG-3P175□	Blank, X, E
	200	BW250SAG-3P200□	
	225	BW250SAG-3P225□	
	250	BW250SAG-3P250□	

● RAG series, 4-pole IEC/EN/GB/JIS conformed

Breaker ampere frame	Rated current (A)	Type	□: Available mounting and connection*
125	15	BW125RAG-4P015□	Blank, X, E
	20	BW125RAG-4P020□	
	30	BW125RAG-4P030□	
	40	BW125RAG-4P040□	
	50	BW125RAG-4P050□	
	60	BW125RAG-4P060□	
	75	BW125RAG-4P075□	
	100	BW125RAG-4P100□	
	125	BW125RAG-4P125□	
160	125	BW160RAG-4P125□	Blank, X, E
	150	BW160RAG-4P150□	
	160	BW160RAG-4P160□	
250	175	BW250RAG-4P175□	Blank, X, E
	200	BW250RAG-4P200□	
	225	BW250RAG-4P225□	
	250	BW250RAG-4P250□	
400	250	BW400RAG-4P250□	Blank, X, E
	300	BW400RAG-4P300□	
	350	BW400RAG-4P350□	
	400	BW400RAG-4P400□	
630	500	BW630RAG-4P500□	Blank, X, E
	600	BW630RAG-4P600□	
	630	BW630RAG-4P630□	
800	700	BW800RAG-4P700□	Blank, X, E
	800	BW800RAG-4P800□	

● HAG series, 4-pole IEC/EN/GB/JIS conformed

Breaker ampere frame	Rated current (A)	Type	□: Available mounting and connection*
400	250	BW400HAG-4P250□	Blank, X, E
	300	BW400HAG-4P300□	
	350	BW400HAG-4P350□	
	400	BW400HAG-4P400□	
630	500	BW630HAG-4P500□	Blank, X, E
	600	BW630HAG-4P600□	
	630	BW630HAG-4P630□	
800	700	BW800HAG-4P700□	Blank, X, E
	800	BW800HAG-4P800□	

** See page B1-29.*

Molded Case Circuit Breakers
G-TWIN series Type number/Line protection

■ Type number, Global series (Line protection)

● EAGU series, 2-pole UL489 Listed

Breaker ampere frame	Rated current (A)	Type	□: Available mounting and connection
100	60	BW100EAGU-2P060□	Blank, SB, SF, S3
	63	BW100EAGU-2P063□	S4, S5, S6, S7, S8
	70	BW100EAGU-2P070□	
	75	BW100EAGU-2P075□	
	80	BW100EAGU-2P080□	
	90	BW100EAGU-2P090□	
	100	BW100EAGU-2P100□	
250	125	BW250EAGU-2P125□	Blank, SB, SF, S3
	150	BW250EAGU-2P150□	S4, S5, S6, S7, S8
	160	BW250EAGU-2P160□	
	175	BW250EAGU-2P175□	
	200	BW250EAGU-2P200□	
	225	BW250EAGU-2P225□	
	250	BW250EAGU-2P250□	
400	250	BW400EAGU-2P250□	Blank, SB, S7, S8
	300	BW400EAGU-2P300□	
	350	BW400EAGU-2P350□	
	400	BW400EAGU-2P400□	

● JAGU series, 2-pole UL489 Listed

Breaker ampere frame	Rated current (A)	Type	□: Available mounting and connection
125	15	BW125JAGU-2P015□	Blank, SB, SF, S3
	20	BW125JAGU-2P020□	S4, S5, S6, S7, S8
	30	BW125JAGU-2P030□	
	40	BW125JAGU-2P040□	
	50	BW125JAGU-2P050□	
	60	BW125JAGU-2P060□	
	70	BW125JAGU-2P070□	
	75	BW125JAGU-2P075□	
	80	BW125JAGU-2P080□	
	90	BW125JAGU-2P090□	
	100	BW125JAGU-2P100□	
	125	BW125JAGU-2P125□	
250	125	BW250JAGU-2P125□	Blank, SB, SF, S3
	150	BW250JAGU-2P150□	S4, S5, S6, S7, S8
	160	BW250JAGU-2P160□	
	175	BW250JAGU-2P175□	
	200	BW250JAGU-2P200□	
	225	BW250JAGU-2P225□	
	250	BW250JAGU-2P250□	

Terminal combination

□:	Terminal position		Breaker type		
Code	Line	Load	BW50	BW100,125,250	BW400,630,800
Blank	Screw	Screw	●	●	–
Blank	Flat terminal	Flat terminal	–	–	●
SB	Block terminal	Block terminal	–	●	●
SF	Flat terminal	Flat terminal	●	●	–
S3	Screw	Flat terminal	●	●	–
S4	Flat terminal	Screw	●	●	–
S5	Screw	Block terminal	–	●	–
S6	Block terminal	Screw	–	●	–
S7	Flat terminal	Block terminal	–	●	●
S8	Block terminal	Flat terminal	–	●	●

● SAGU series, 2-pole UL489 Listed

Breaker ampere frame	Rated current (A)	Type	□: Available mounting and connection
400	250	BW400SAGU-2P250□	Blank, SB, S7, S8
	300	BW400SAGU-2P300□	
	350	BW400SAGU-2P350□	
	400	BW400SAGU-2P400□	

● RAGU series, 2-pole UL489 Listed

Breaker ampere frame	Rated current (A)	Type	□: Available mounting and connection
50	3	BW50RAGU-2P003□	Blank, SF, S3, S4
	5	BW50RAGU-2P005□	
	10	BW50RAGU-2P010□	
	15	BW50RAGU-2P015□	
	20	BW50RAGU-2P020□	
	30	BW50RAGU-2P030□	
	32	BW50RAGU-2P032□	
	40	BW50RAGU-2P040□	
	50	BW50RAGU-2P050□	
125	15	BW125RAGU-2P015□	Blank, SB, SF, S3
	20	BW125RAGU-2P020□	S4, S5, S6, S7, S8
	30	BW125RAGU-2P030□	
	40	BW125RAGU-2P040□	
	50	BW125RAGU-2P050□	
	60	BW125RAGU-2P060□	
	70	BW125RAGU-2P070□	
	75	BW125RAGU-2P075□	
	80	BW125RAGU-2P080□	
	90	BW125RAGU-2P090□	
	100	BW125RAGU-2P100□	
	125	BW125RAGU-2P125□	
250	125	BW250RAGU-2P125□	Blank, SB, SF, S3
	150	BW250RAGU-2P150□	S4, S5, S6, S7, S8
	160	BW250RAGU-2P160□	
	175	BW250RAGU-2P175□	
	200	BW250RAGU-2P200□	
	225	BW250RAGU-2P225□	
	250	BW250RAGU-2P250□	
400	250	BW400RAGU-2P250□	Blank, SB, S7, S8
	300	BW400RAGU-2P300□	
	350	BW400RAGU-2P350□	
	400	BW400RAGU-2P400□	

● HAGU series, 2-pole UL489 Listed

Breaker ampere frame	Rated current (A)	Type	□: Available mounting and connection
400	250	BW400HAGU-2P250□	Blank, SB, S7, S8
	300	BW400HAGU-2P300□	
	350	BW400HAGU-2P350□	
	400	BW400HAGU-2P400□	

Molded Case Circuit Breakers
G-TWIN series Type number/Line protection

● EAGU series, 3-pole UL489 Listed

Breaker ampere frame	Rated current (A)	Type	□: Available mounting and connection*
100	60	BW100EAGU-3P060□	Blank, SB, SF, S3
	63	BW100EAGU-3P063□	S4, S5, S6, S7, S8
	70	BW100EAGU-3P070□	
	75	BW100EAGU-3P075□	
	80	BW100EAGU-3P080□	
	90	BW100EAGU-3P090□	
	100	BW100EAGU-3P100□	
250	125	BW250EAGU-3P125□	Blank, SB, SF, S3
	150	BW250EAGU-3P150□	S4, S5, S6, S7, S8
	160	BW250EAGU-3P160□	
	175	BW250EAGU-3P175□	
	200	BW250EAGU-3P200□	
	225	BW250EAGU-3P225□	
	250	BW250EAGU-3P250□	
400	250	BW400EAGU-3P250□	Blank, SB, S7, S8
	300	BW400EAGU-3P300□	
	350	BW400EAGU-3P350□	
	400	BW400EAGU-3P400□	

● JAGU series, 3-pole UL489 Listed

Breaker ampere frame	Rated current (A)	Type	□: Available mounting and connection*
125	15	BW125JAGU-3P015□	Blank, SB, SF, S3
	20	BW125JAGU-3P020□	S4, S5, S6, S7, S8
	30	BW125JAGU-3P030□	
	40	BW125JAGU-3P040□	
	50	BW125JAGU-3P050□	
	60	BW125JAGU-3P060□	
	70	BW125JAGU-3P070□	
	75	BW125JAGU-3P075□	
	80	BW125JAGU-3P080□	
	90	BW125JAGU-3P090□	
	100	BW125JAGU-3P100□	
	125	BW125JAGU-3P125□	
250	125	BW250JAGU-3P125□	Blank, SB, SF, S3
	150	BW250JAGU-3P150□	S4, S5, S6, S7, S8
	160	BW250JAGU-3P160□	
	175	BW250JAGU-3P175□	
	200	BW250JAGU-3P200□	
	225	BW250JAGU-3P225□	
	250	BW250JAGU-3P250□	

● SAGU series, 3-pole UL489 Listed

Breaker ampere frame	Rated current (A)	Type	□: Available mounting and connection*
400	250	BW400SAGU-3P250□	Blank, SB, S7, S8
	300	BW400SAGU-3P300□	
	350	BW400SAGU-3P350□	
	400	BW400SAGU-3P400□	

● RAGU series, 3-pole UL489 Listed

Breaker ampere frame	Rated current (A)	Type	□: Available mounting and connection*
50	3	BW50RAGU-3P003□	Blank, SB, S3, S4
	5	BW50RAGU-3P005□	
	10	BW50RAGU-3P010□	
	15	BW50RAGU-3P015□	
	20	BW50RAGU-3P020□	
	30	BW50RAGU-3P030□	
	32	BW50RAGU-3P032□	
	40	BW50RAGU-3P040□	
	50	BW50RAGU-3P050□	
125	15	BW125RAGU-3P015□	Blank, SB, SF, S3
	20	BW125RAGU-3P020□	S4, S5, S6, S7, S8
	30	BW125RAGU-3P030□	
	40	BW125RAGU-3P040□	
	50	BW125RAGU-3P050□	
	60	BW125RAGU-3P060□	
	70	BW125RAGU-3P070□	
	75	BW125RAGU-3P075□	
	80	BW125RAGU-3P080□	
	90	BW125RAGU-3P090□	
	100	BW125RAGU-3P100□	
	125	BW125RAGU-3P125□	
250	125	BW250RAGU-3P125□	Blank, SB, SF, S3
	150	BW250RAGU-3P150□	S4, S5, S6, S7, S8
	160	BW250RAGU-3P160□	
	175	BW250RAGU-3P175□	
	200	BW250RAGU-3P200□	
	225	BW250RAGU-3P225□	
	250	BW250RAGU-3P250□	
400	250	BW400RAGU-3P250□	Blank, SB, S7, S8
	300	BW400RAGU-3P300□	
	350	BW400RAGU-3P350□	
	400	BW400RAGU-3P400□	
630	500	BW630RAGU-3P500□	Blank, SB, S7, S8
	600	BW630RAGU-3P600□	
	630	BW630RAGU-3P630□	
800	700	BW800RAGU-3P700□	Blank, SB, S7, S8
	800	BW800RAGU-3P800□	

● HAGU series, 3-pole UL489 Listed

Breaker ampere frame	Rated current (A)	Type	□: Available mounting and connection*
400	250	BW400HAGU-3P250□	Blank, SB, S7, S8
	300	BW400HAGU-3P300□	
	350	BW400HAGU-3P350□	
	400	BW400HAGU-3P400□	
630	500	BW630HAGU-3P500□	Blank, SB, S7, S8
	600	BW630HAGU-3P600□	
	630	BW630HAGU-3P630□	
800	700	BW800HAGU-3P700□	Blank, SB, S7, S8
	800	BW800HAGU-3P800□	

* *See page B1-34.*

Molded Case Circuit Breakers
G-TWIN series Type number/Motor protection

■ Type number, Standard series (Motor protection)

● SAM series, 2-pole IEC/EN/GB/JIS conformed

Breaker ampere frame	Rated current (A)	Type	□: Available mounting and connection
32	0.7	BW32SAM-2P0P7□	Blank, X, E, Y, P
	1.4	BW32SAM-2P1P4□	
	2.6	BW32SAM-2P2P6□	
	4	BW32SAM-2P004□	
	8	BW32SAM-2P008□	
	10	BW32SAM-2P010□	
	16	BW32SAM-2P016□	
	24	BW32SAM-2P024□	
	32	BW32SAM-2P032□	

Mounting	Connection	□
Front	Front	Blank
Front	Rear	X
Flush	Rear	E
Flush	Top and bottom	Y
Plug-in		P

● AAM series, 3-pole IEC/EN/GB/JIS conformed

Breaker ampere frame	Rated current (A)	Type	□: Available mounting and connection
32	1.4	BW32AAM-3P1P4□	Blank, X, E, Y, P
	2.6	BW32AAM-3P2P6□	
	4	BW32AAM-3P004□	
	8	BW32AAM-3P008□	
	10	BW32AAM-3P010□	
	16	BW32AAM-3P016□	
	24	BW32AAM-3P024□	
	32	BW32AAM-3P032□	

● EAM series, 3-pole IEC/EN/GB/JIS conformed

Breaker ampere frame	Rated current (A)	Type	□: Available mounting and connection
50	24	BW50EAM-3P024□	Blank, X, E, Y, P
	32	BW50EAM-3P032□	
	40	BW50EAM-3P040□	
	45	BW50EAM-3P045□	
63	63	BW63EAM-3P063□	Blank, X, E, Y, P
100	63	BW100EAM-3P063□	Blank, X, E, Y, P
	75	BW100EAM-3P075□	
	90	BW100EAM-3P090□	
250	125	BW250EAM-3P125□	Blank, X, E, P
	150	BW250EAM-3P150□	
	175	BW250EAM-3P175□	
	225	BW250EAM-3P225□	

● JAM series, 3-pole IEC/EN/GB/JIS conformed

Breaker ampere frame	Rated current (A)	Type	□: Available mounting and connection
125	16	BW125JAM-3P016□	Blank, X, E, P
	24	BW125JAM-3P024□	
	32	BW125JAM-3P032□	
	40	BW125JAM-3P040□	
	60	BW125JAM-3P060□	
	75	BW125JAM-3P075□	
	90	BW125JAM-3P090□	
250	125	BW250JAM-3P125□	Blank, X, E, P
	150	BW250JAM-3P150□	
	175	BW250JAM-3P175□	
	225	BW250JAM-3P225□	

Molded Case Circuit Breakers
G-TWIN series Type number/Motor protection

● SAM series, 3-pole IEC/EN/GB/JIS conformed

Breaker ampere frame	Rated current (A)	Type	□: Available mounting and connection*
32	0.7	BW32SAM-3P0P7□	Blank, X, E, Y, P
	1.4	BW32SAM-3P1P4□	
	2.6	BW32SAM-3P2P6□	
	4	BW32SAM-3P004□	
	8	BW32SAM-3P008□	
	10	BW32SAM-3P010□	
	16	BW32SAM-3P016□	
	24	BW32SAM-3P024□	
	32	BW32SAM-3P032□	
50	0.7	BW50SAM-3P0P7□	Blank, X, E, Y, P
	1.4	BW50SAM-3P1P4□	
	2	BW50SAM-3P002□	
	2.6	BW50SAM-3P2P6□	
	4	BW50SAM-3P004□	
	5	BW50SAM-3P005□	
	8	BW50SAM-3P008□	
	10	BW50SAM-3P010□	
	12	BW50SAM-3P012□	
	16	BW50SAM-3P016□	
	24	BW50SAM-3P024□	
	32	BW50SAM-3P032□	
	40	BW50SAM-3P040□	
	45	BW50SAM-3P045□	
63	63	BW63SAM-3P063□	Blank, X, E, Y, P

● RAM series, 3-pole IEC/EN/GB/JIS conformed

Breaker ampere frame	Rated current (A)	Type	□: Available mounting and connection*
50	0.7	BW50RAM-3P0P7□	Blank, X, E, Y, P
	1.4	BW50RAM-3P1P4□	
	2	BW50RAM-3P002□	
	2.6	BW50RAM-3P2P6□	
	4	BW50RAM-3P004□	
	5	BW50RAM-3P005□	
	8	BW50RAM-3P008□	
	10	BW50RAM-3P010□	
	12	BW50RAM-3P012□	
	16	BW50RAM-3P016□	
	24	BW50RAM-3P024□	
	32	BW50RAM-3P032□	
	40	BW50RAM-3P040□	
	45	BW50RAM-3P045□	
125	16	BW125RAM-3P016□	Blank, X, E, P
	24	BW125RAM-3P024□	
	32	BW125RAM-3P032□	
	40	BW125RAM-3P040□	
	60	BW125RAM-3P060□	
	75	BW125RAM-3P075□	
	90	BW125RAM-3P090□	
250	125	BW250RAM-3P125□	Blank, X, E, P
	150	BW250RAM-3P150□	
	175	BW250RAM-3P175□	
	225	BW250RAM-3P225□	

** See page B1-36.*

Molded Case Circuit Breakers
G-TWIN series Arc space

■ Arc space, mm

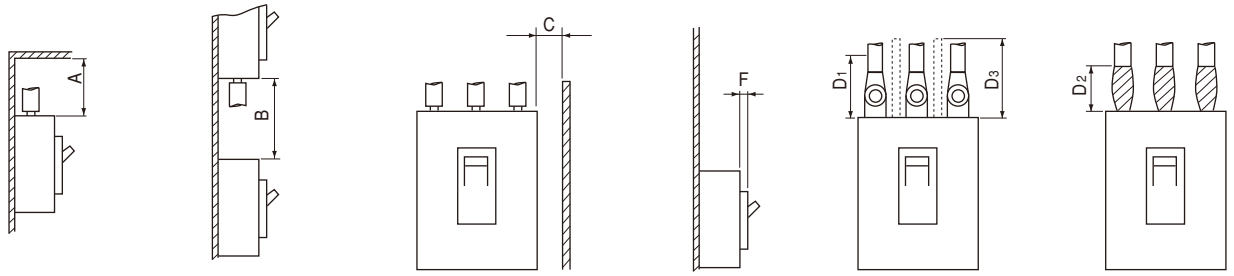

Frame size	MCCB basic type	Ceiling distance A		Vertical distance B		Side plate distance C		Front plate distance Painted F		Front plate distance No painted F		Taping Crimp type terminal lug D1	Taping Bus-bar D2	Barrier D3
		440V	230V	440V	230V	440V	230V	440V	230V	440V	230V			
32A	BW32A	–	10	–	10	–	10	–	0	–	0	Exposed live part dimension +20	10	10
	BW32S	10	10	30	30	20	15	0	0	0	0		30	30
50A	BW50A	–	10	–	10	–	10	–	0	–	0		10	10
	BW50E	10	10	30	30	25	15	0	0	0	0		30	30
	BW50S	30	10	40	40	25	15	0	0	0	0		30	30
	BW50R	50	25	50	50	25	15	0	0	10	5		50	50
	BW50H	60	60	80	80	50	20	5	0	10	5		80	80
63A	BW63E	10	10	30	30	25	15	0	0	0	0		30	30
	BW63S	30	10	40	40	25	15	0	0	0	0		30	30
	BW63R	50	25	50	50	25	15	0	0	10	5		50	50
100A	BW100A	–	10	–	20	–	15	–	0	–	0		50	50
	BW100E	50	25	50	50	25	15	0	0	10	5		50	50
125A	BW125J	40	40	50	50	25	20	0	0	10	5		50	50
	BW125S	40	40	60	60	25	20	5	0	10	5		50	50
	BW125R	40	40	60	60	25	20	5	0	10	5		50	50
	BW125H	60	60	80	80	50	20	5	0	10	5		80	80
160A	BW160E	40	40	50	50	50	15	0	0	10	5		80	80
	BW160J	40	40	60	60	50	20	0	0	10	5		80	80
	BW160S	40	40	80	80	50	20	5	0	10	10		80	80
	BW160R	40	40	80	80	50	20	5	0	10	10		80	80
250A	BW250E	40	40	50	50	50	15	0	0	10	5		80	80
	BW250J	40	40	60	60	50	20	0	0	10	5		80	80
	BW250S	40	40	80	80	50	20	5	0	10	10		80	80
	BW250R	40	40	80	80	50	20	5	0	10	10		80	80
	BW250H	60	60	80	80	60	60	5	0	10	10		80	80
400A	BW400E	100	80	100	80	50	20	0	0	10	5		100	100
	BW400S	100	80	100	80	50	20	0	0	10	5		100	100
	BW400R	100	80	100	80	80	40	5	0	20	10		100	100
	BW400H	100	80	100	80	80	40	5	0	20	10		100	100
630A	BW630E	100	80	100	80	80	40	0	0	10	5		100	100
	BW630R	100	80	100	80	80	40	5	0	20	10		100	100
	BW630H	120	100	120	100	80	40	5	0	20	10		120	120
800A	BW800E	100	80	100	80	80	40	0	0	10	5		100	100
	BW800R	100	80	100	80	80	40	5	0	20	10		100	100
	BW800H	120	100	120	100	80	40	5	0	20	20		120	120

■ Dimensions, mm

● Front mounting, front connection

BW32□-2P, BW50□-2P

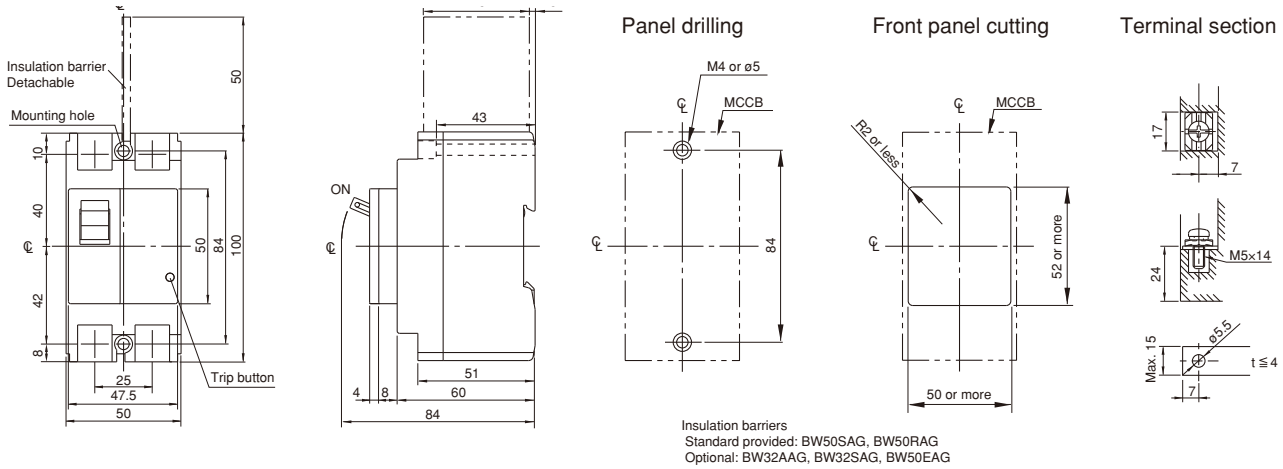

BW32□-3P, BW50□-3P

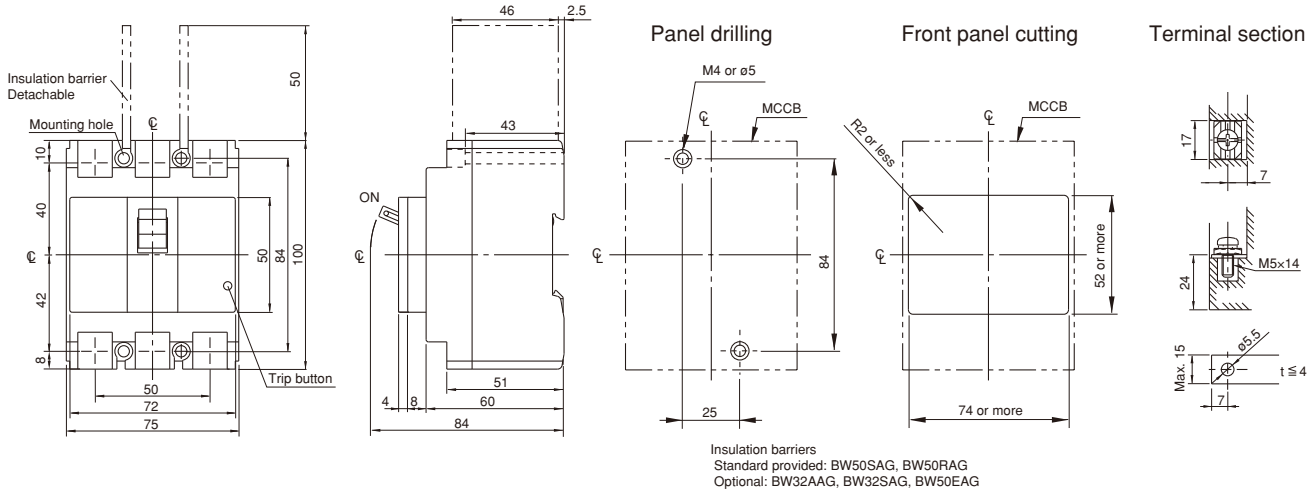

BW63□-2P

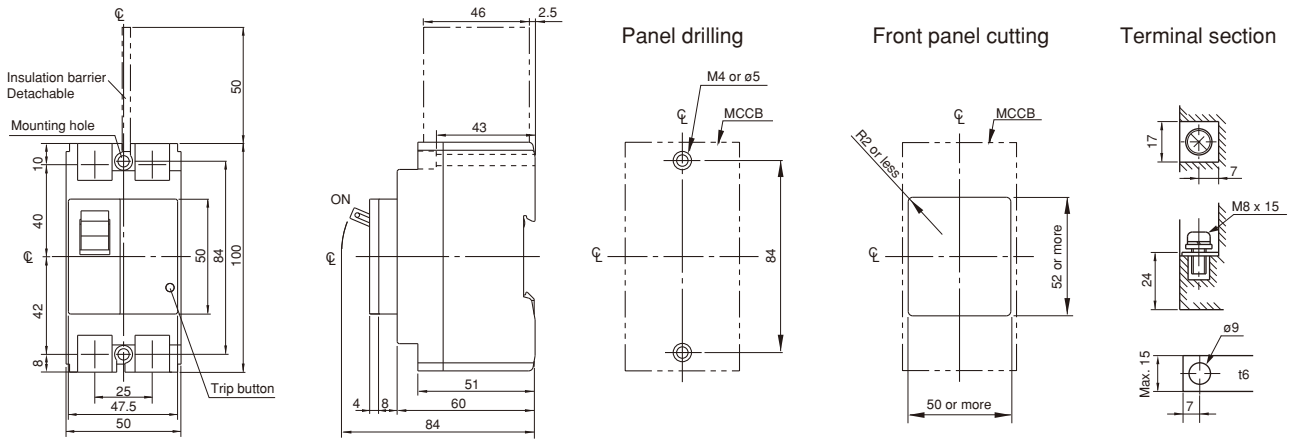

Molded Case Circuit Breakers
G-TWIN series Dimensions / Standard

■ Dimensions, mm

● Front mounting, front connection

BW63□-3P

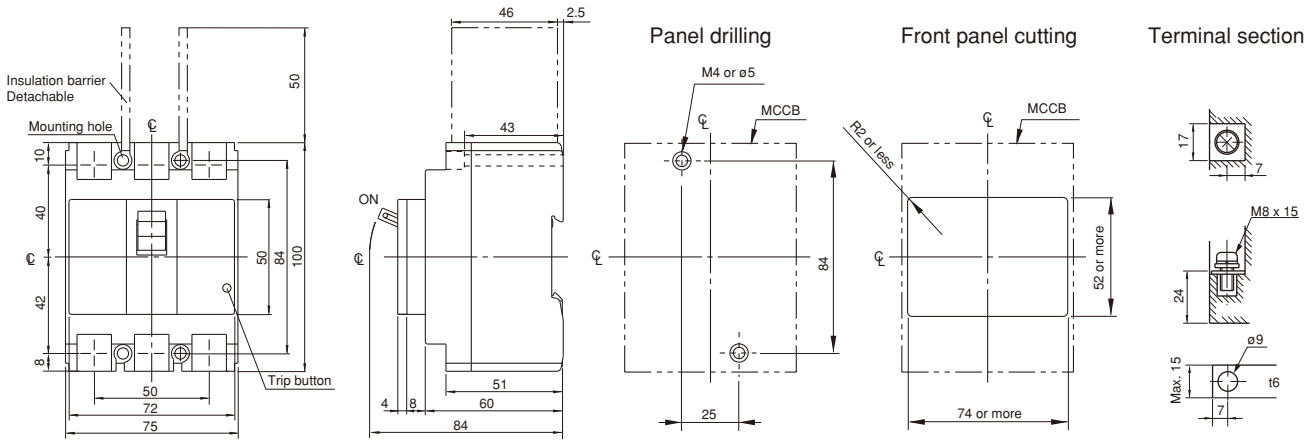

BW100□-2P

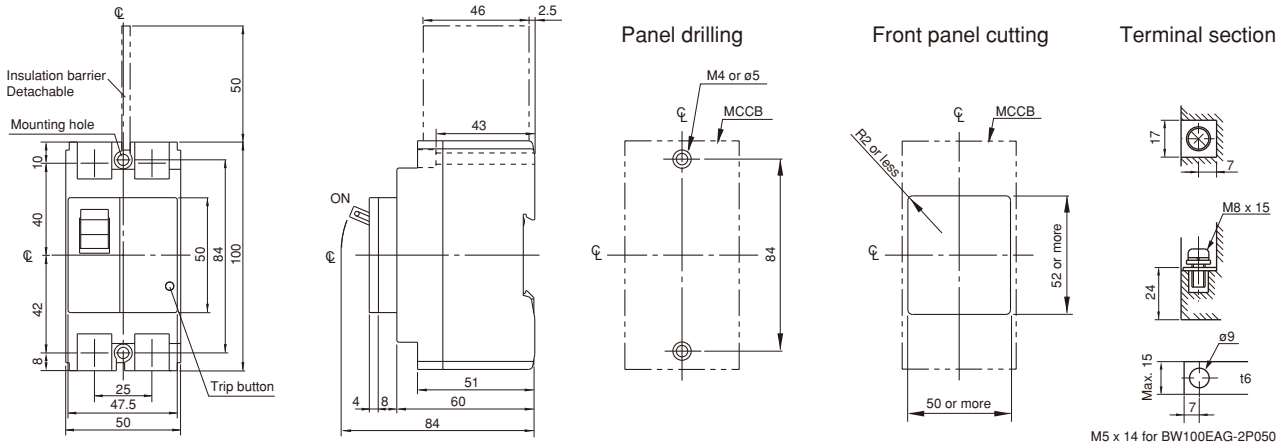

BW100□-3P

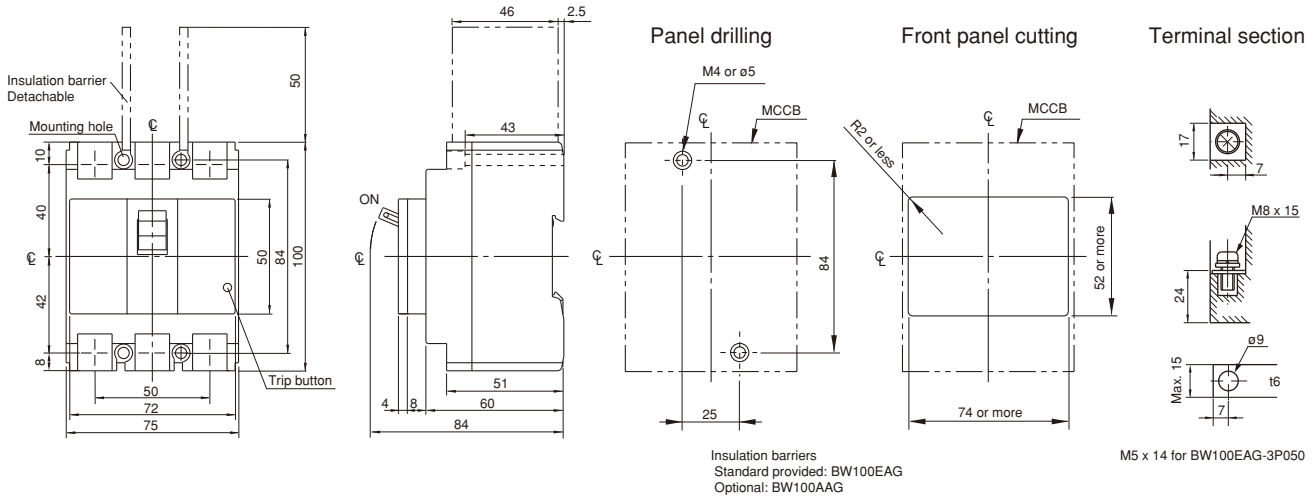

■ Dimensions, mm

● Front mounting, front connection

BW125JAG-2P

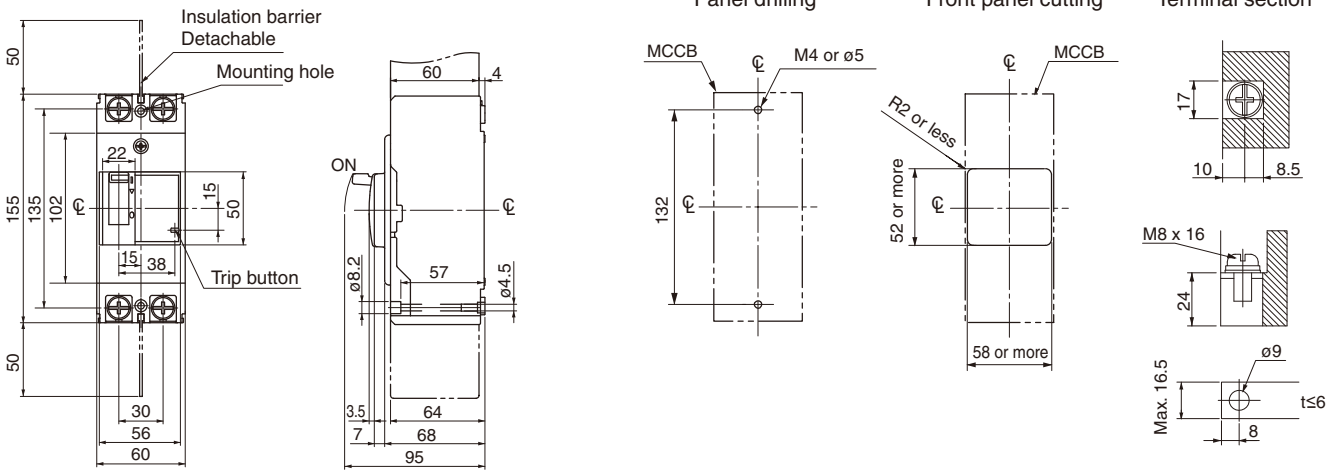

BW50HAG-2P, 3P, BW125JAG-3P,
BW125SAG-2P, 3P, BW125RAG-2P, 3P
BW125HAG-2P, 3P

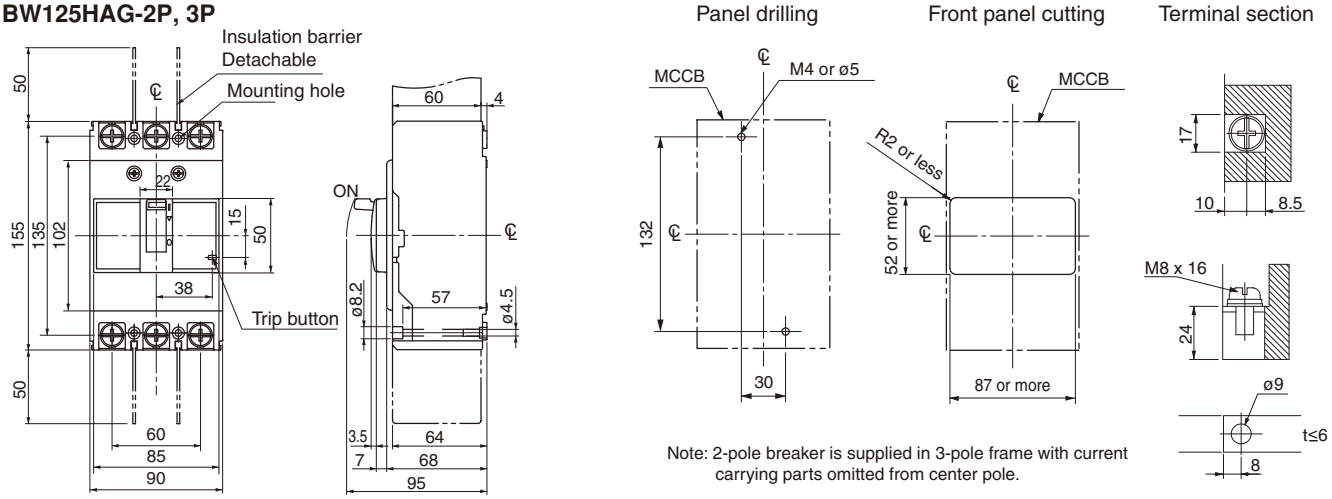

Note: 2-pole breaker is supplied in 3-pole frame with current carrying parts omitted from center pole.

BW125JAG-4P
BW125SAG-4P
BW125RAG-4P

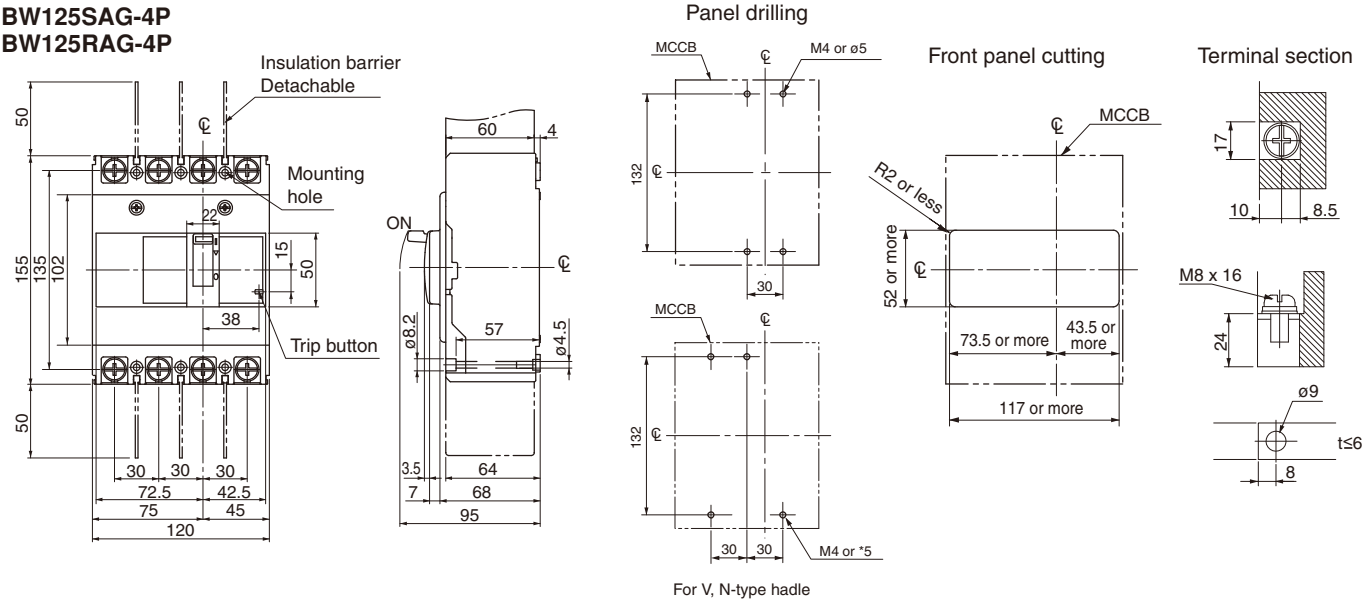

For V, N-type hadle

Molded Case Circuit Breakers
G-TWIN series Dimensions / Standard

■ Dimensions, mm

● Front mounting, front connection

BW160□-2P, 3P
BW250□-2P, 3P

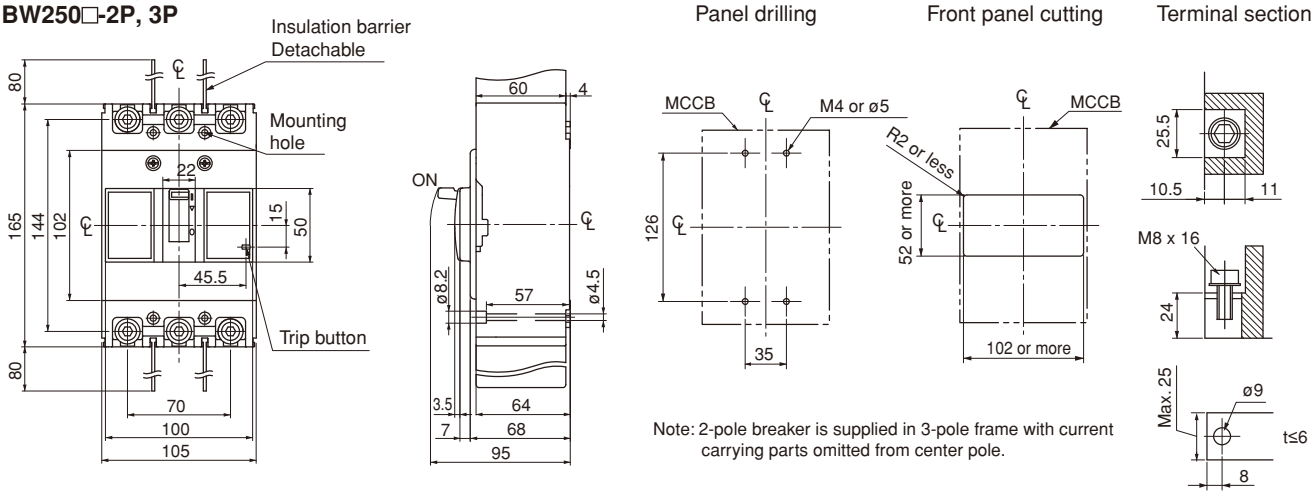

Note: 2-pole breaker is supplied in 3-pole frame with current carrying parts omitted from center pole.

BW160□-4P
BW250□-4P

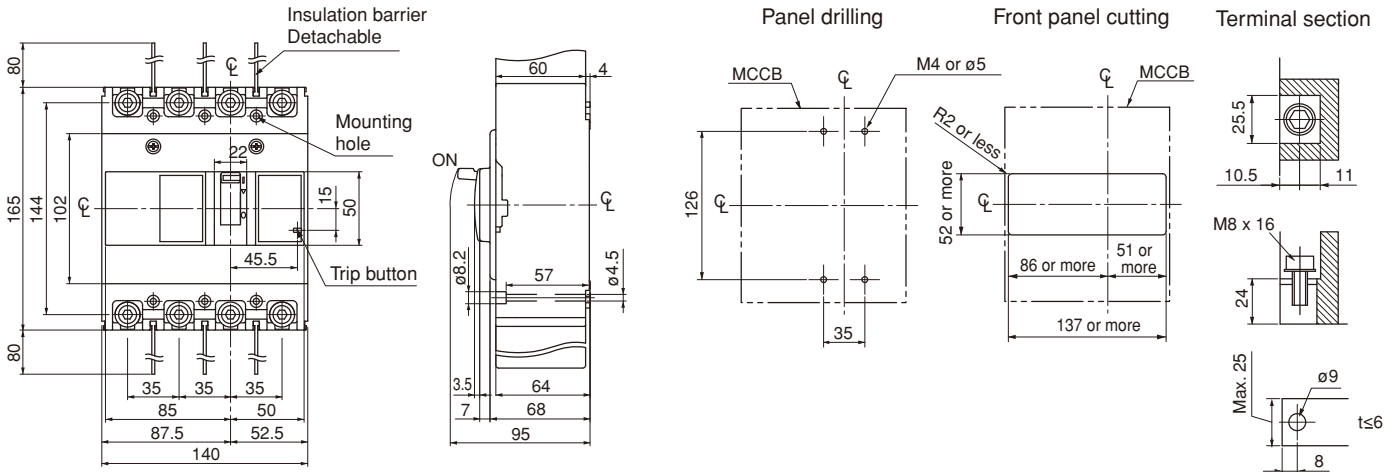

Fuji Electric FA Components & Systems Co., Ltd.
Information subject to change without notice

■ Dimensions, mm

● Front mounting, front connection

BW400□-2P, 3P

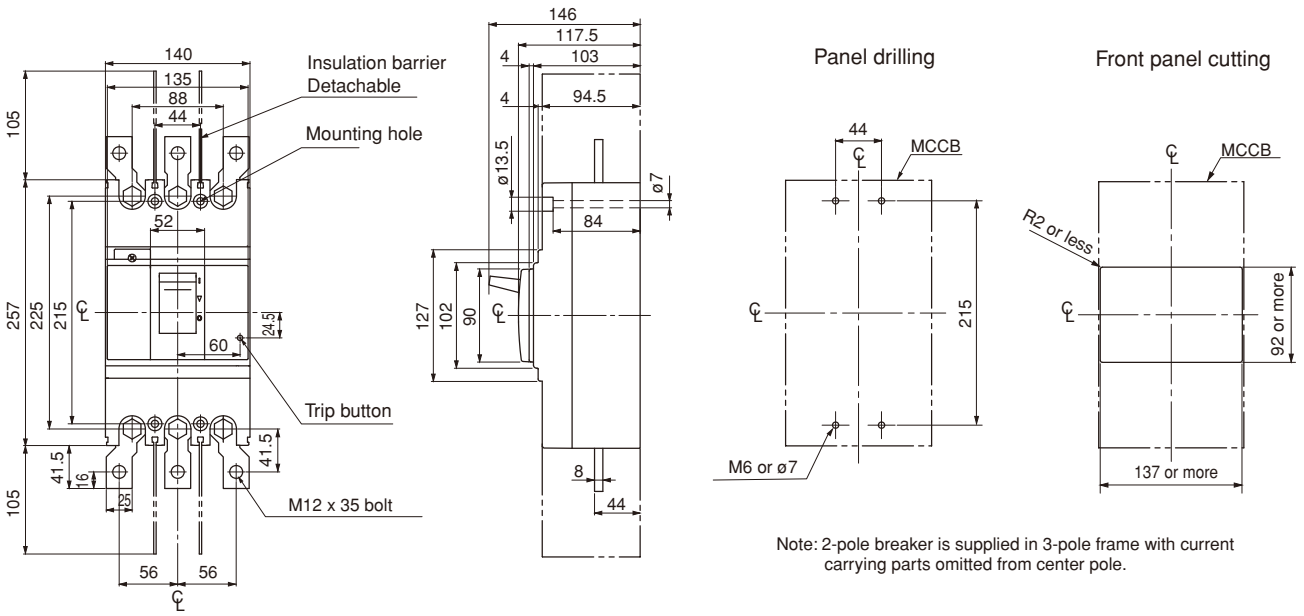

Note: 2-pole breaker is supplied in 3-pole frame with current carrying parts omitted from center pole.

BW400□-4P

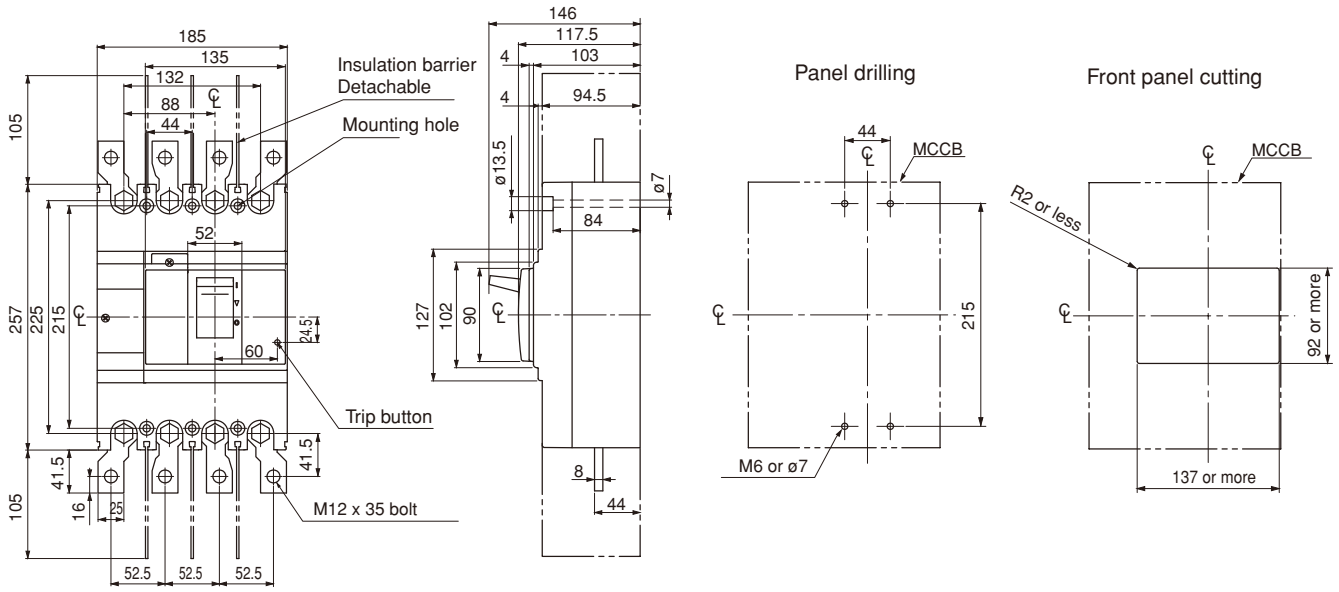

Molded Case Circuit Breakers
G-TWIN series Dimensions / Standard

■ Dimensions, mm

● Front mounting, front connection

BW630□-3P

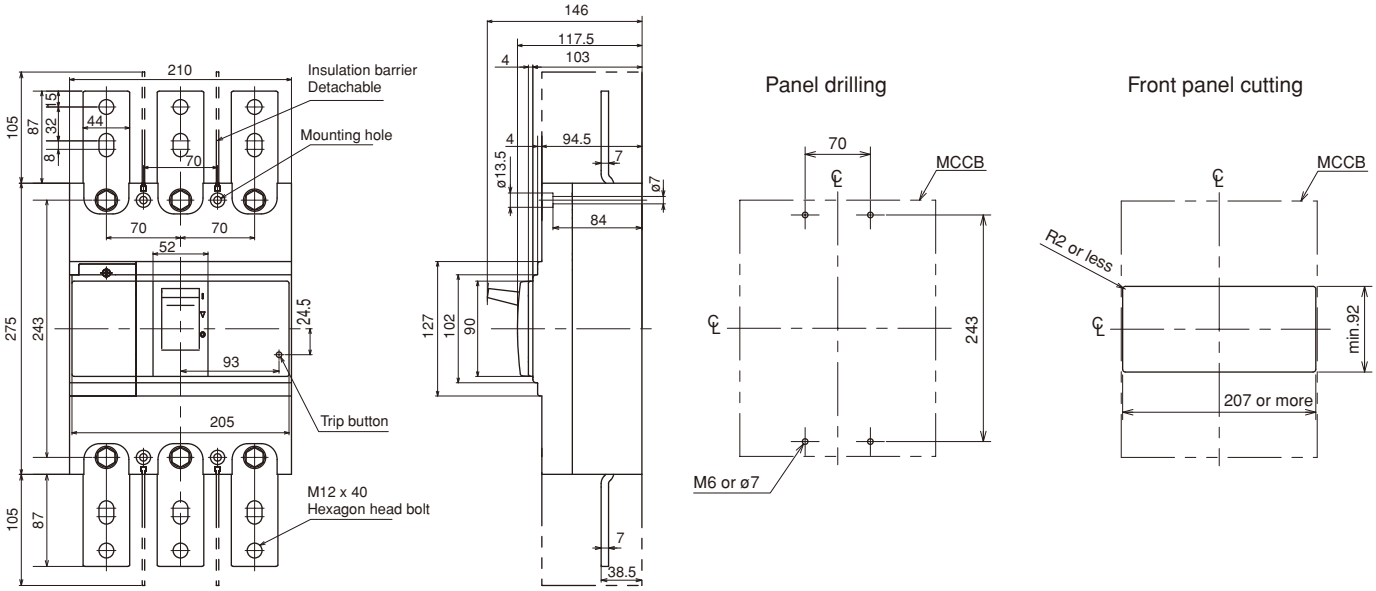

BW630□-4P

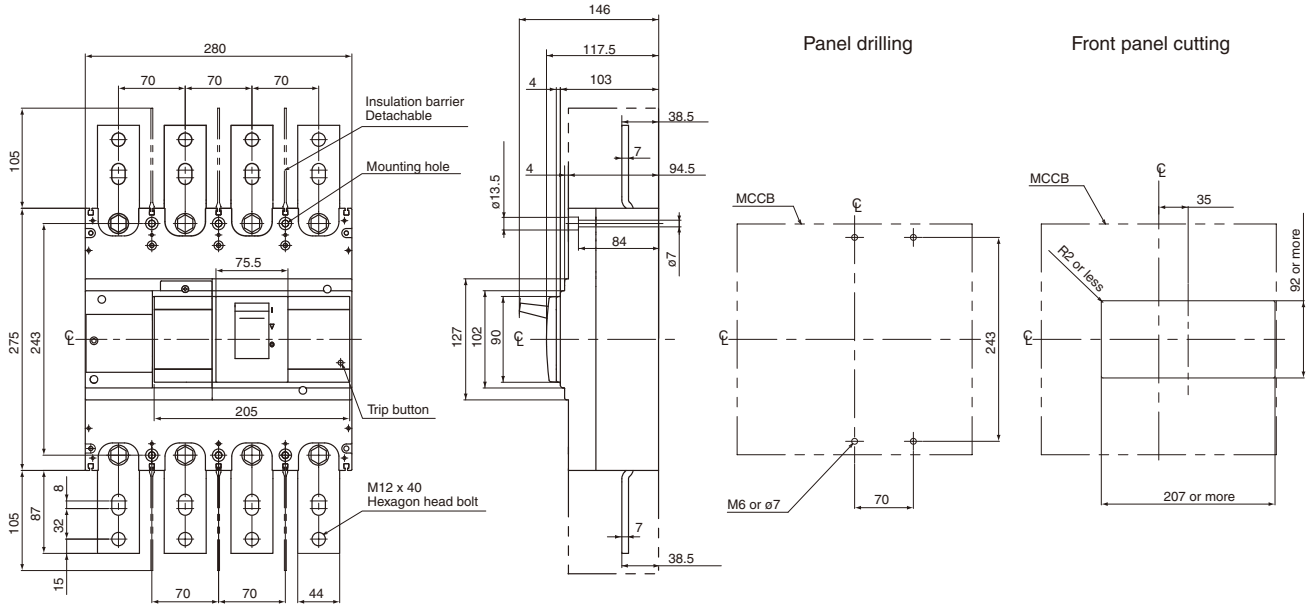

Fuji Electric FA Components & Systems Co., Ltd.
Information subject to change without notice

■ Dimensions, mm

● Front mounting, front connection

BW800□-3P

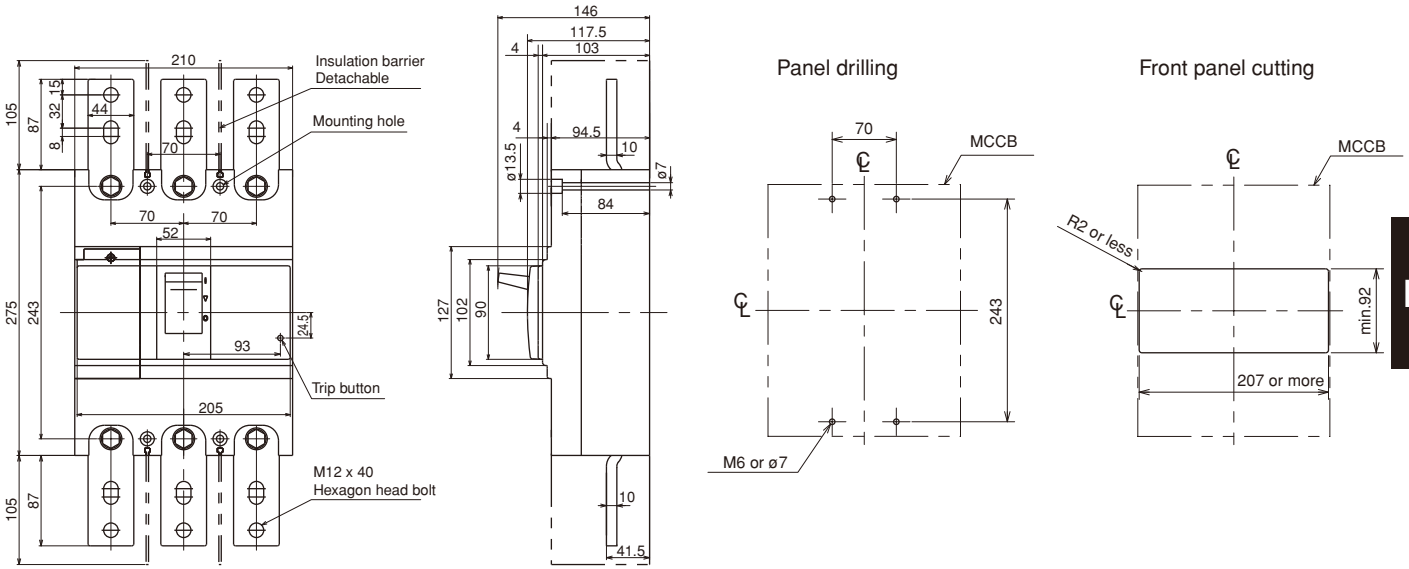

BW800□-4P

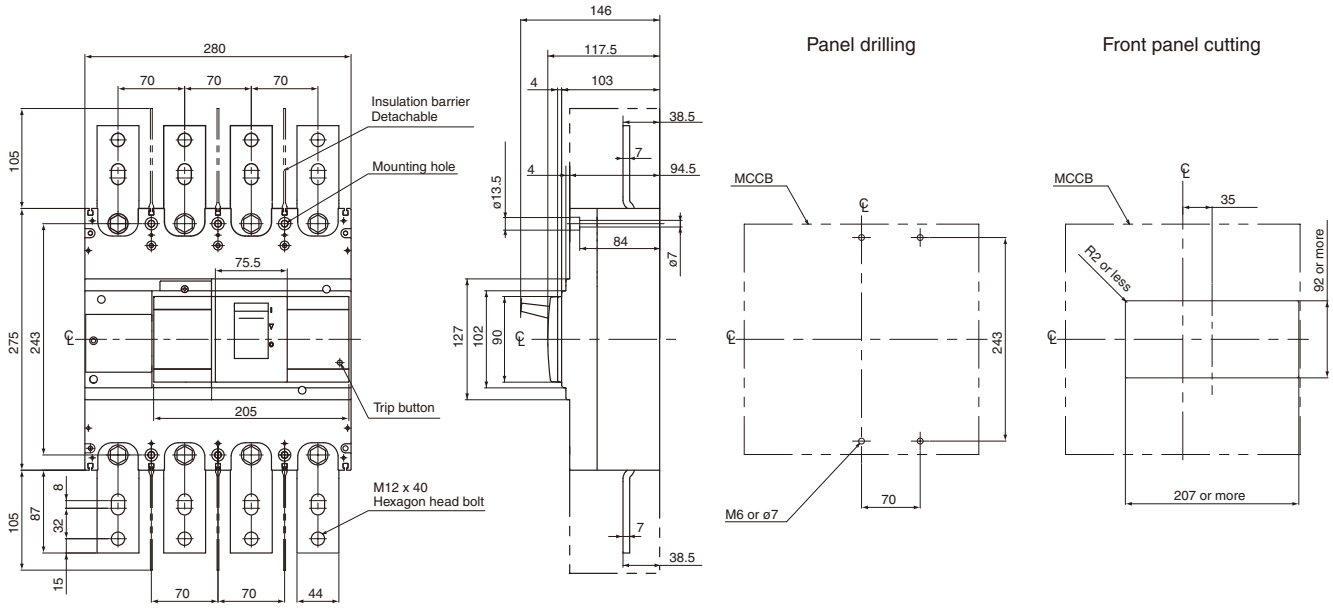

Molded Case Circuit Breakers
G-TWIN series Dimensions / Standard

■ Dimensions, mm

● Front mounting, rear connection (type X)

BW32□-2P, BW50□-2P

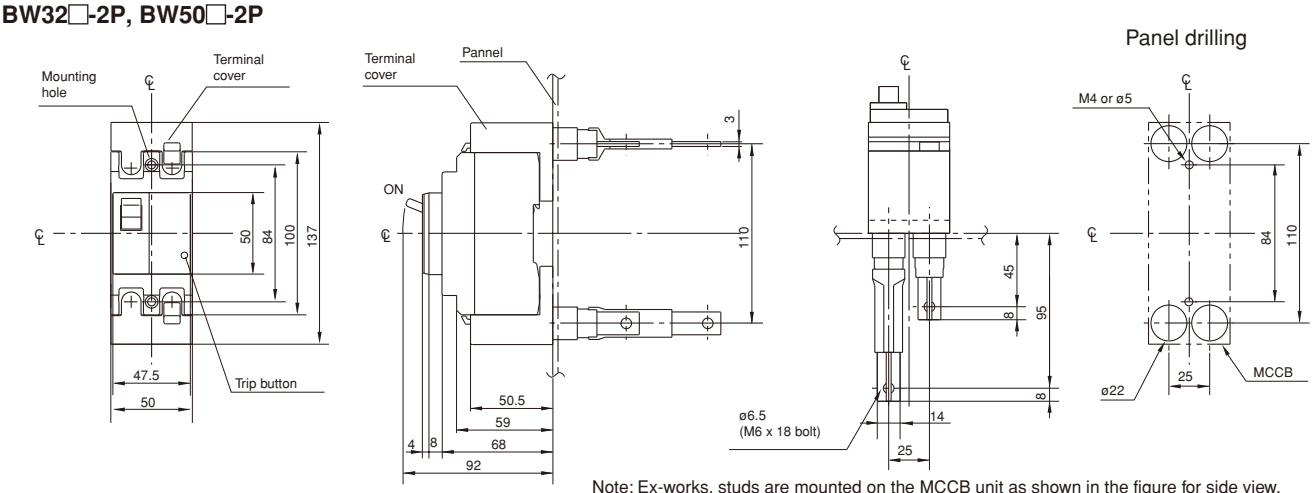

Note: Ex-works, studs are mounted on the MCCB unit as shown in the figure for side view.
•Studs for line side terminal : Mounted horizontally.
•Studs for load-side terminal : Mounted vertically.
Each stud can be turned by 90˚.

BW32□-3P, BW50□-3P

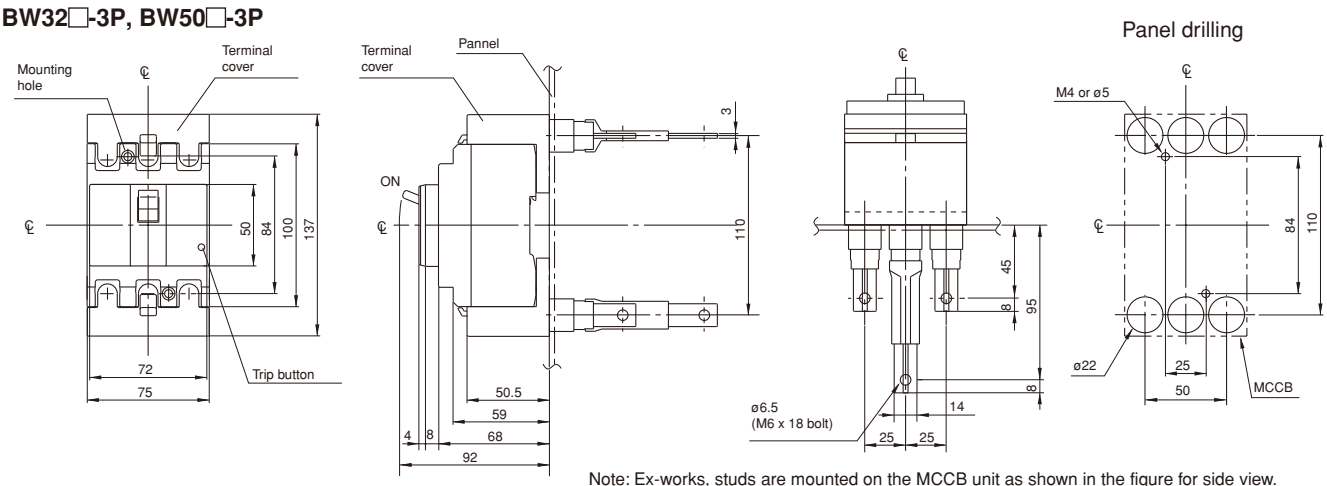

Note: Ex-works, studs are mounted on the MCCB unit as shown in the figure for side view.
•Studs for line side terminal : Mounted horizontally.
•Studs for load-side terminal : Mounted vertically.
Each stud can be turned by 90˚.
2-pole breaker is supplied in 3-pole frame with current carrying parts omitted from center pole.

BW63□-2P

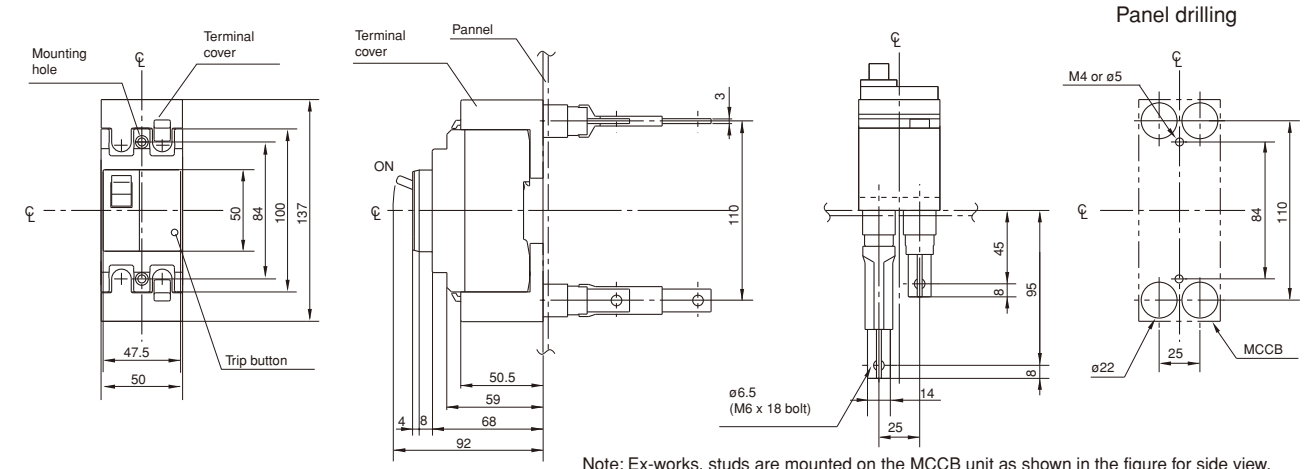

Note: Ex-works, studs are mounted on the MCCB unit as shown in the figure for side view.
•Studs for line side terminal : Mounted horizontally.
•Studs for load-side terminal : Mounted vertically.
Each stud can be turned by 90˚.

Fuji Electric FA Components & Systems Co., Ltd.
Information subject to change without notice

■ Dimensions, mm

● Front mounting, rear connection (type X)

BW63□-3P

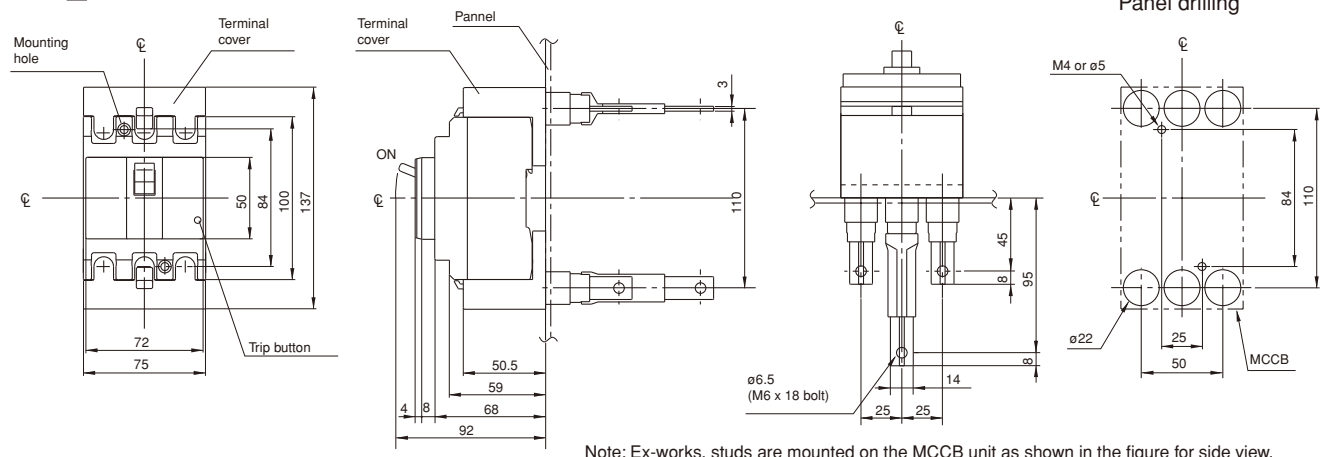

Note: Ex-works, studs are mounted on the MCCB unit as shown in the figure for side view.
•Studs for line side terminal : Mounted horizontally.
•Studs for load-side terminal : Mounted vertically.
Each stud can be turned by 90˚.
2-pole breaker is supplied in 3-pole frame with current carrying parts omitted from center pole.

BW100□-2P

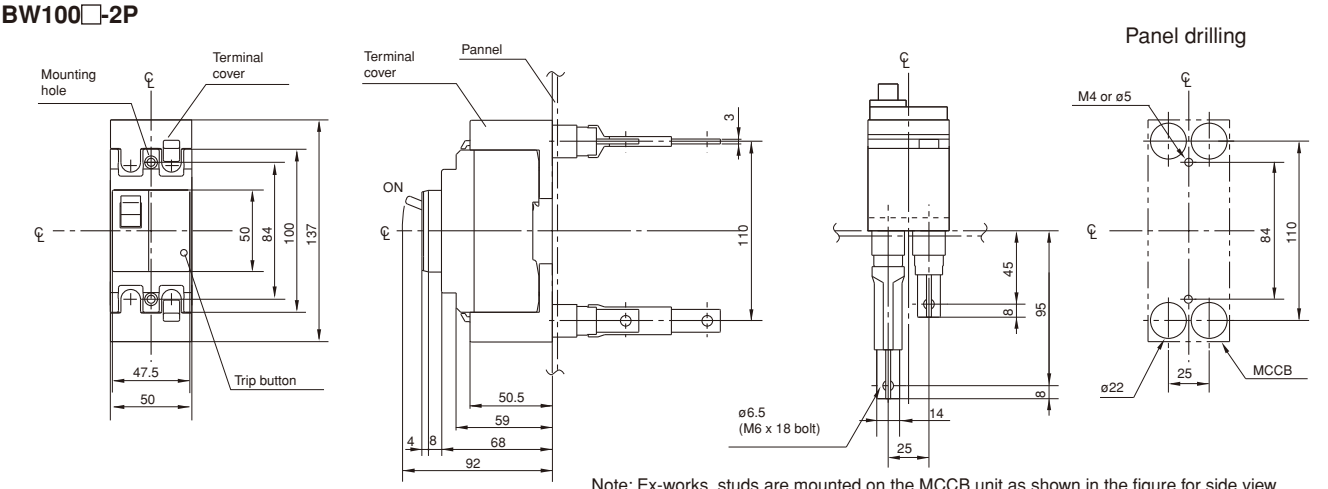

Note: Ex-works, studs are mounted on the MCCB unit as shown in the figure for side view.
•Studs for line side terminal : Mounted horizontally.
•Studs for load-side terminal : Mounted vertically.
Each stud can be turned by 90˚.

BW100□-3P

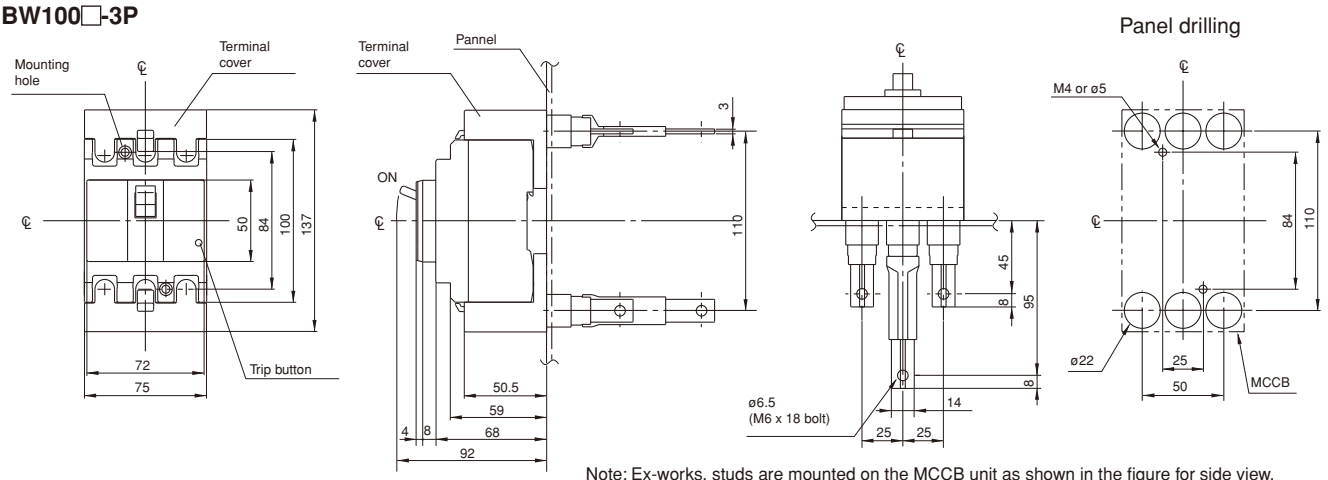

Note: Ex-works, studs are mounted on the MCCB unit as shown in the figure for side view.
•Studs for line side terminal : Mounted horizontally.
•Studs for load-side terminal : Mounted vertically.
Each stud can be turned by 90˚.
2-pole breaker is supplied in 3-pole frame with current carrying parts omitted from center pole.

Molded Case Circuit Breakers
G-TWIN series Dimensions / Standard

■ Dimensions, mm

● Front mounting, rear connection (type X)

BW125JAG-2P

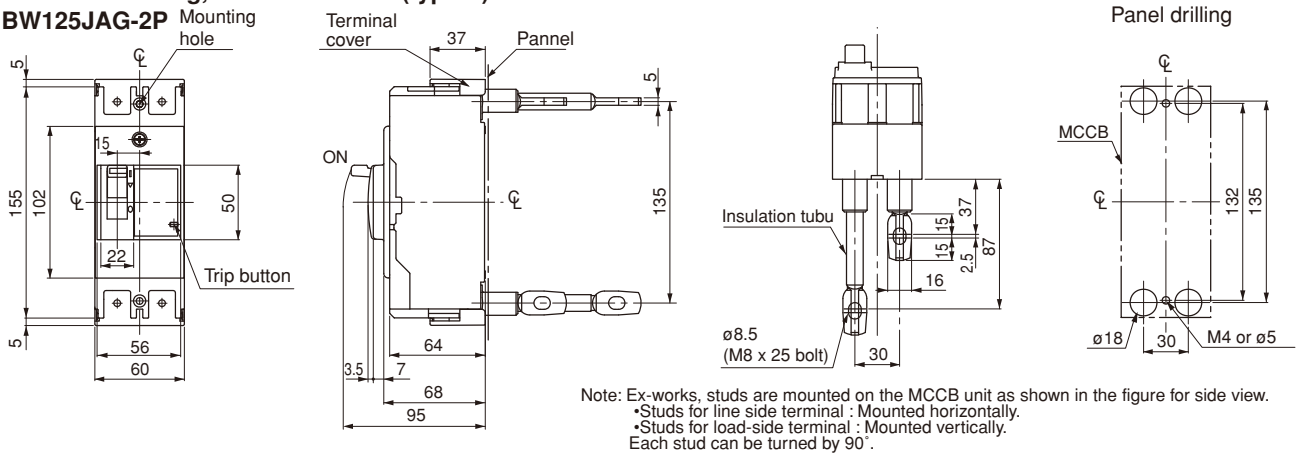

Note: Ex-works, studs are mounted on the MCCB unit as shown in the figure for side view.
•Studs for line side terminal : Mounted horizontally.
•Studs for load-side terminal : Mounted vertically.
Each stud can be turned by 90˚.

BW50HAG-2P, 3P, BW125JAG-3P
BW125SAG-2P, 3P, BW125RAG-2P, 3P
BW125HAG-2P, 3P

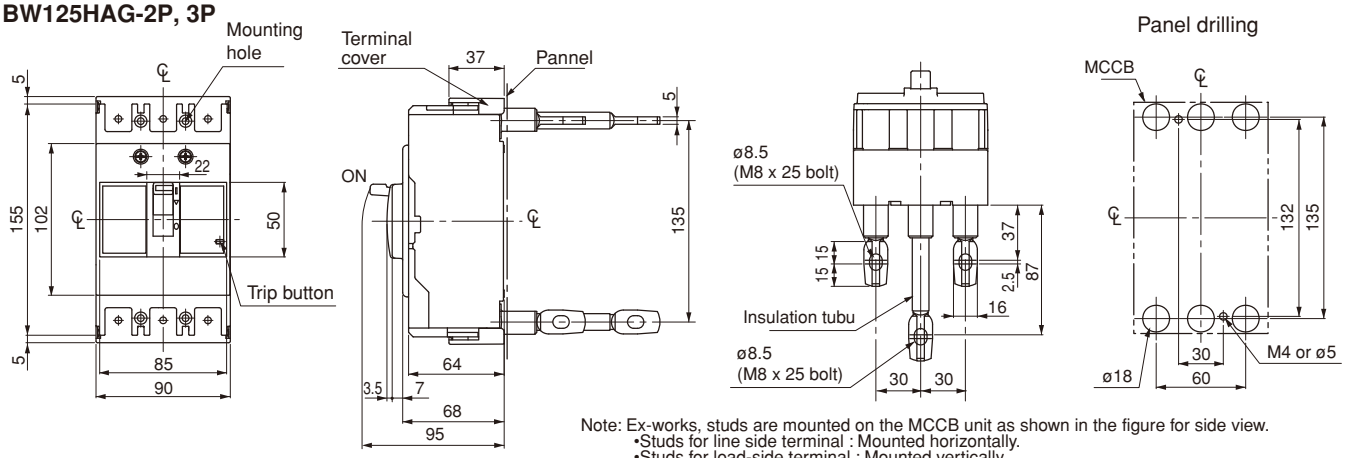

Note: Ex-works, studs are mounted on the MCCB unit as shown in the figure for side view.
•Studs for line side terminal : Mounted horizontally.
•Studs for load-side terminal : Mounted vertically.
Each stud can be turned by 90˚.
2-pole breaker is supplied in 3-pole frame with current carrying parts omitted from center pole.

BW125JAG-4P
BW125SAG-4P
BW125RAG-4P

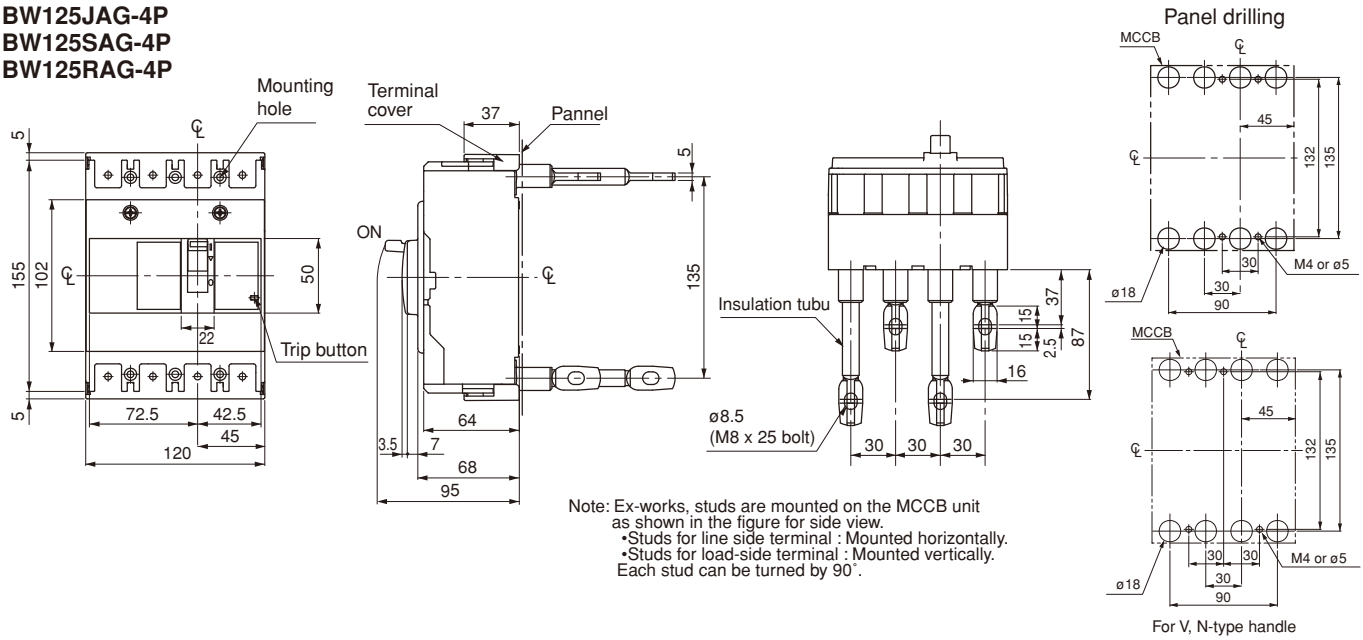

Note: Ex-works, studs are mounted on the MCCB unit as shown in the figure for side view.
•Studs for line side terminal : Mounted horizontally.
•Studs for load-side terminal : Mounted vertically.
Each stud can be turned by 90˚.

Fuji Electric FA Components & Systems Co., Ltd.
Information subject to change without notice

■ Dimensions, mm

● Front mounting, rear connection (type X)

BW160□-2P, 3P
BW250□-2P, 3P

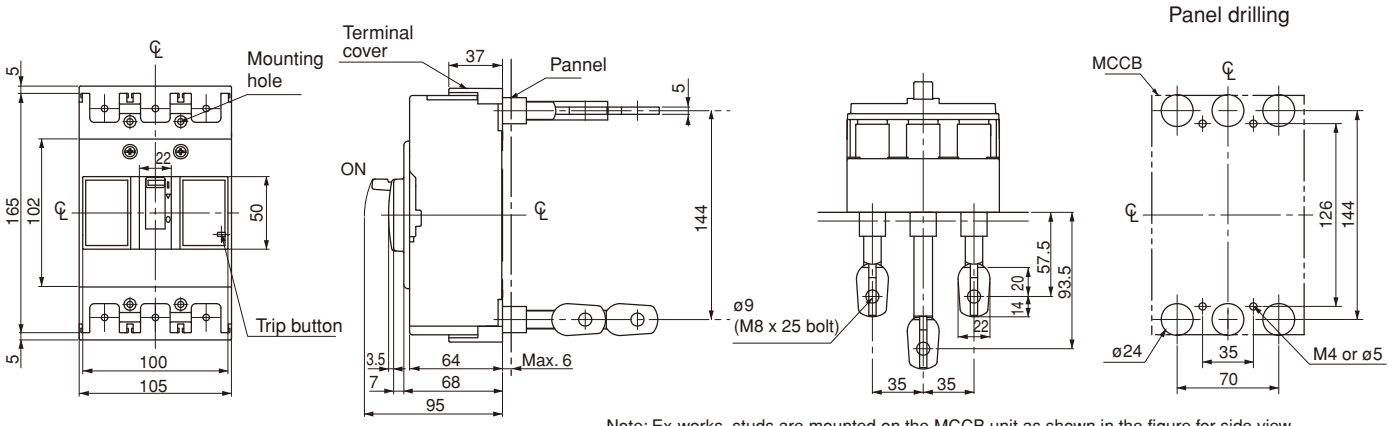

Note: Ex-works, studs are mounted on the MCCB unit as shown in the figure for side view.
•Studs for line side terminal : Mounted horizontally.
•Studs for load-side terminal : Mounted vertically.
Each stud can be turned by 90˚.
2-pole breaker is supplied in 3-pole frame with current carrying parts omitted from center pole.

BW160□-4P
BW250□-4P

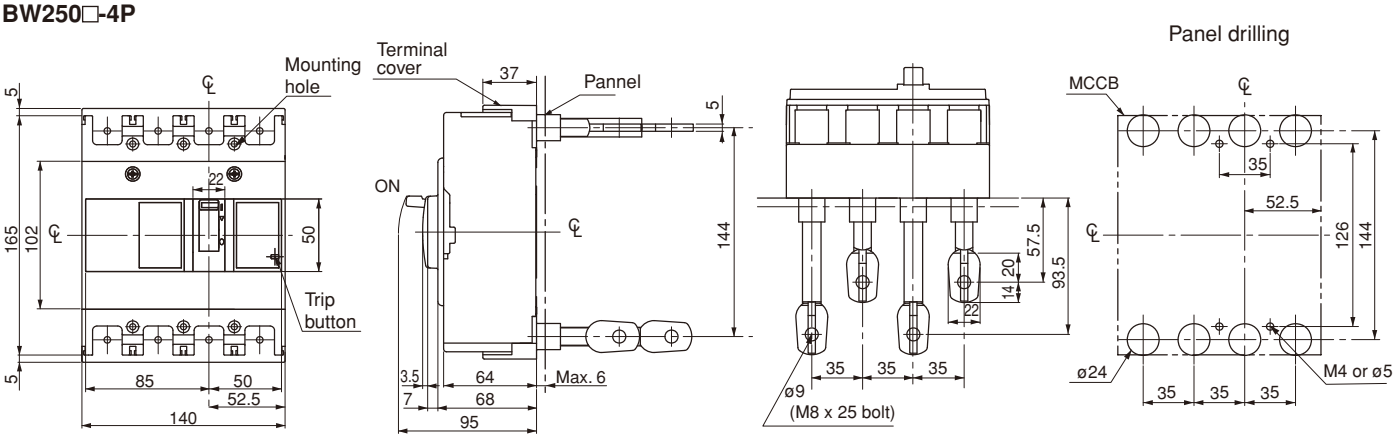

Note: Ex-works, studs are mounted on the MCCB unit as shown in the figure for side view.
•Studs for line side terminal : Mounted horizontally.
•Studs for load-side terminal : Mounted vertically.
Each stud can be turned by 90˚.

Molded Case Circuit Breakers
G-TWIN series Dimensions / Standard

■ Dimensions, mm

● Front mounting, rear connection (type X)

BW400□-2P, 3P

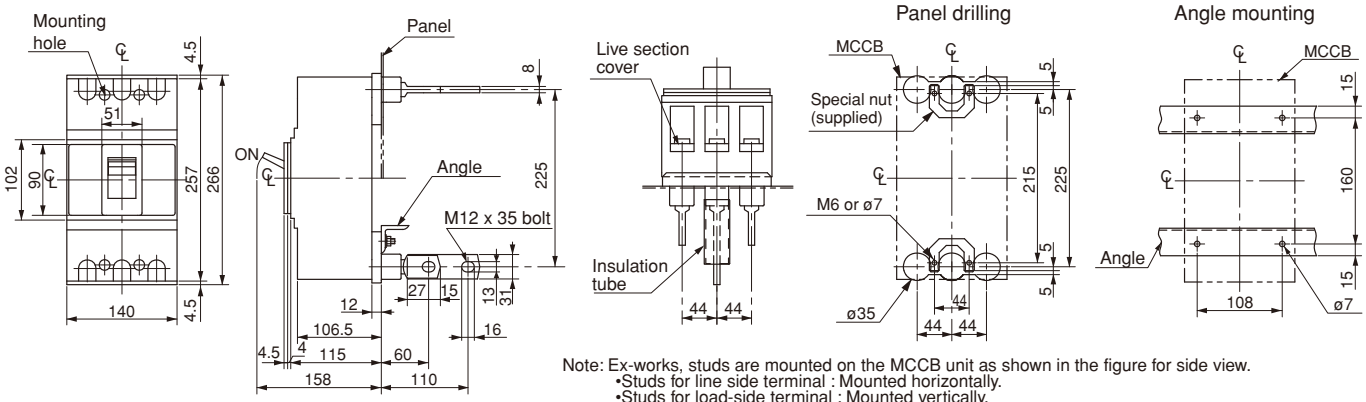

Note: Ex-works, studs are mounted on the MCCB unit as shown in the figure for side view.
•Studs for line side terminal : Mounted horizontally.
•Studs for load-side terminal : Mounted vertically.
Each stud can be turned by 90˚.
2-pole breaker is supplied in 3-pole frame with current carrying parts omitted from center pole.

BW400□-4P

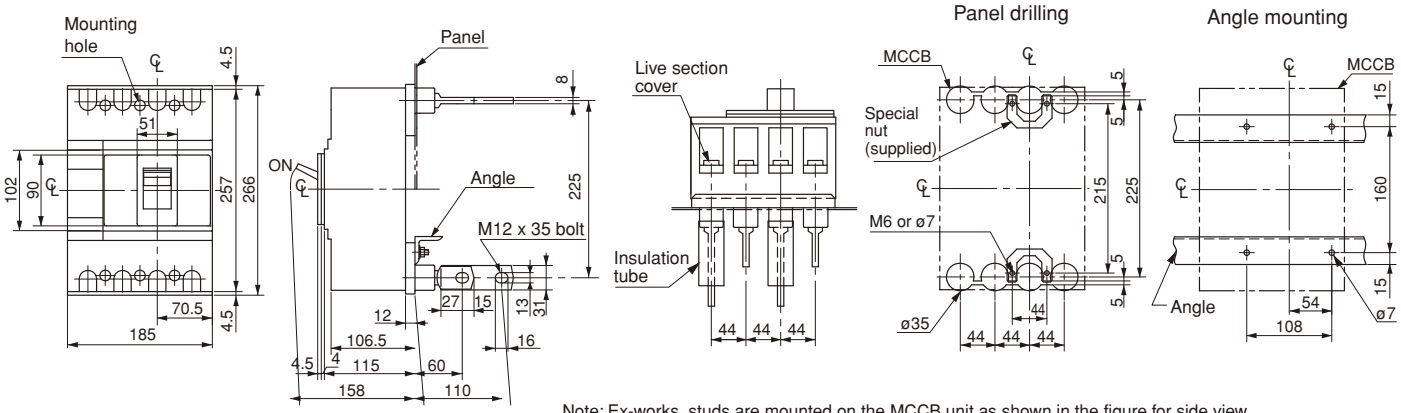

Note: Ex-works, studs are mounted on the MCCB unit as shown in the figure for side view.
•Studs for line side terminal : Mounted horizontally.
•Studs for load-side terminal : Mounted vertically.
Each stud can be turned by 90˚.

Fuji Electric FA Components & Systems Co., Ltd.
Information subject to change without notice

■ Dimensions, mm

● Front mounting, rear connection (type X)

BW630□-3P

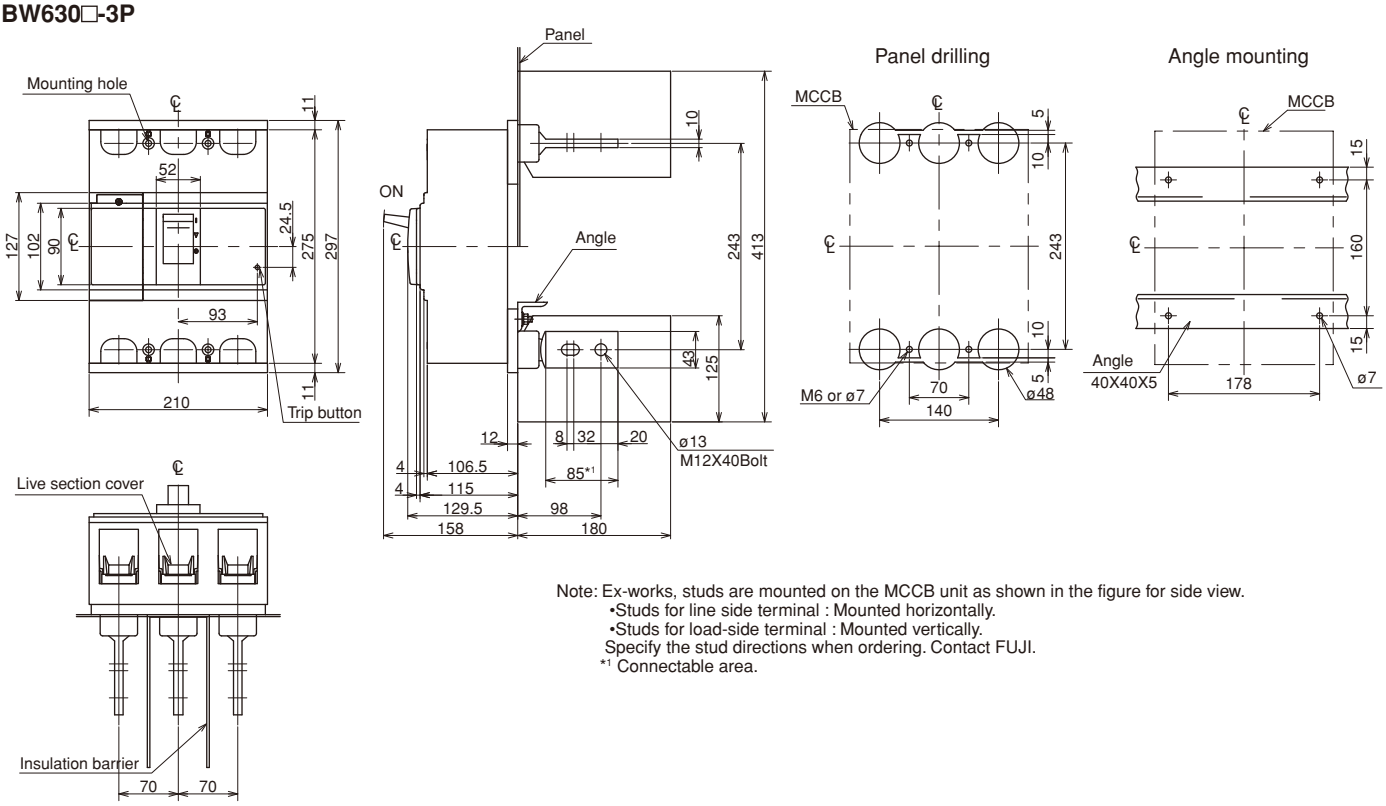

Note: Ex-works, studs are mounted on the MCCB unit as shown in the figure for side view.
•Studs for line side terminal : Mounted horizontally.
•Studs for load-side terminal : Mounted vertically.
Specify the stud directions when ordering. Contact FUJI.
*1 Connectable area.

BW630□-4P

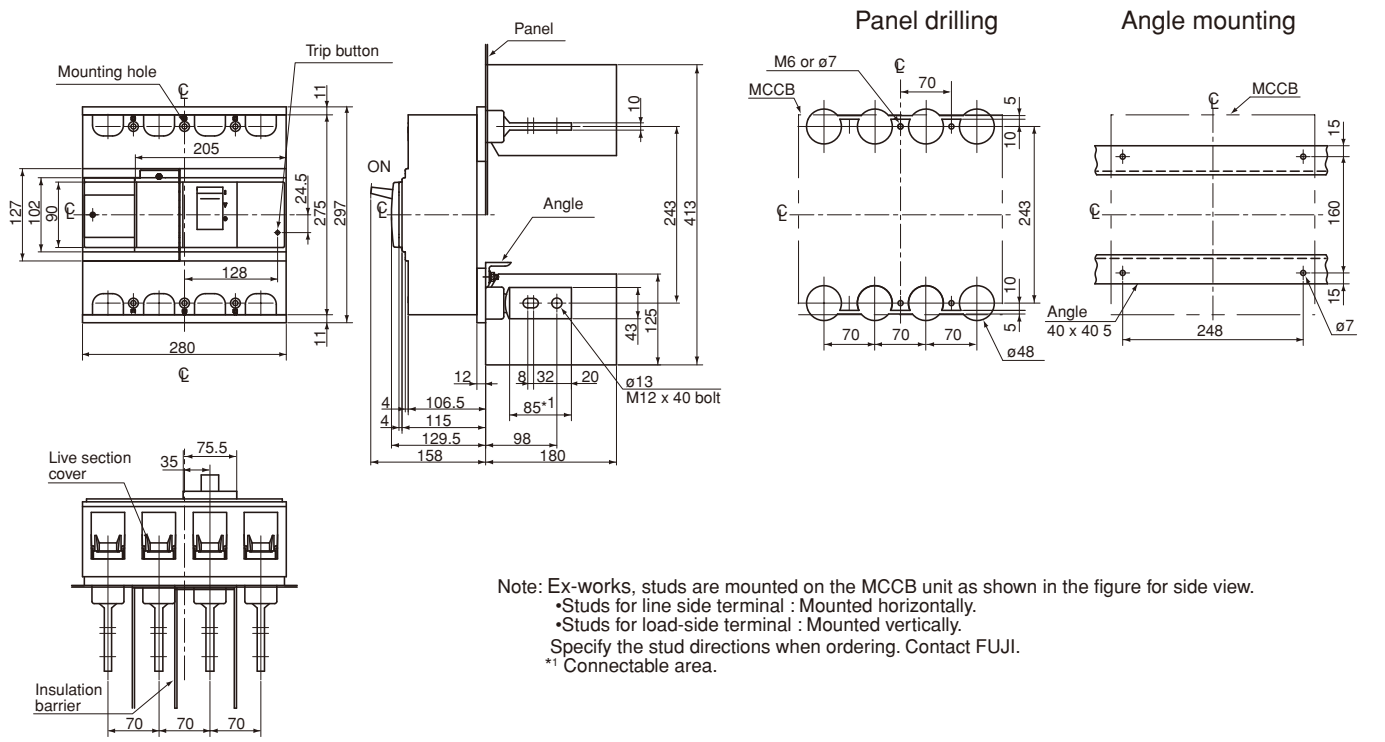

Note: Ex-works, studs are mounted on the MCCB unit as shown in the figure for side view.
•Studs for line side terminal : Mounted horizontally.
•Studs for load-side terminal : Mounted vertically.
Specify the stud directions when ordering. Contact FUJI.
*1 Connectable area.

Molded Case Circuit Breakers
G-TWIN series Dimensions / Standard

■ Dimensions, mm

● Front mounting, rear connection (type X)

BW800□-3P

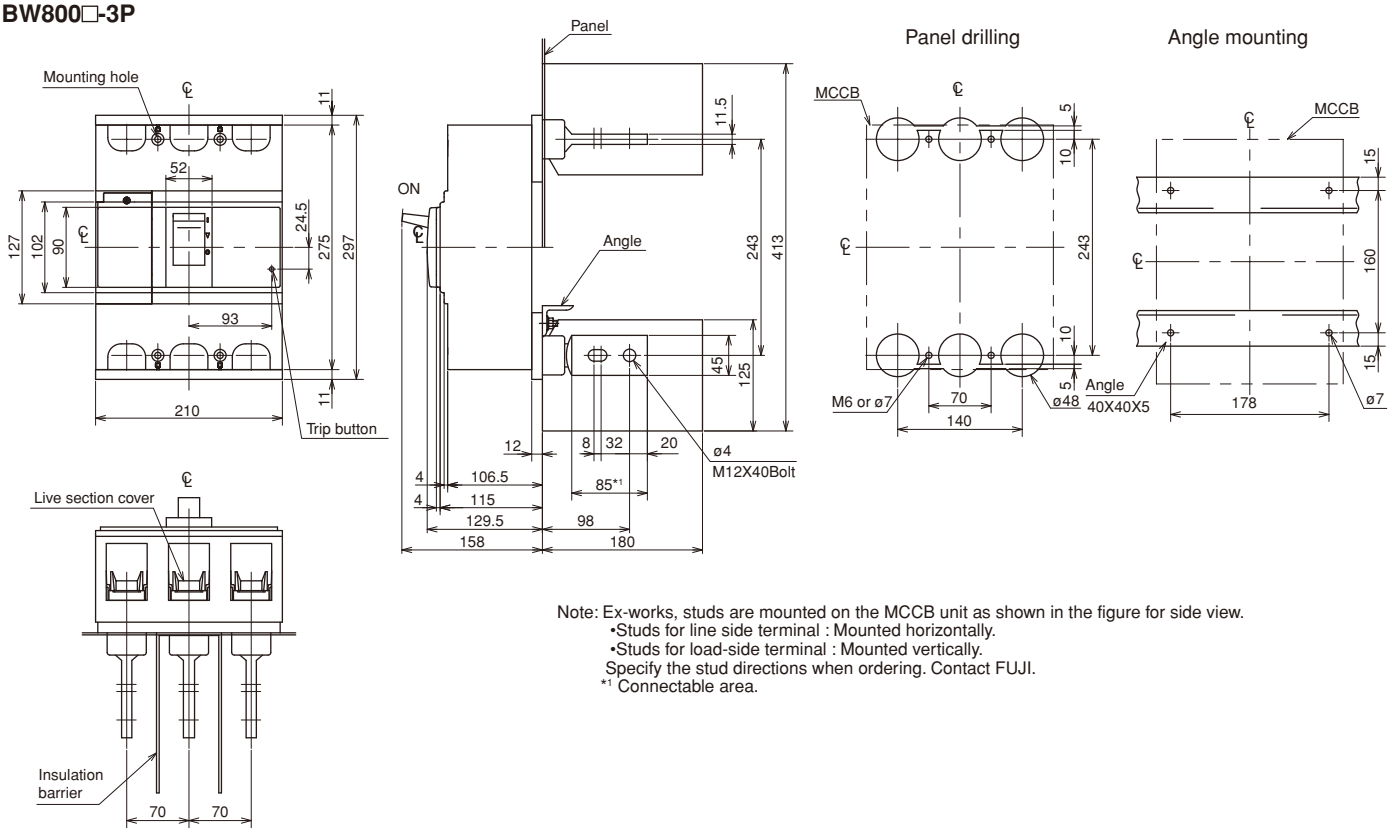

Note: Ex-works, studs are mounted on the MCCB unit as shown in the figure for side view.
•Studs for line side terminal : Mounted horizontally.
•Studs for load-side terminal : Mounted vertically.
Specify the stud directions when ordering. Contact FUJI.
*1 Connectable area.

BW800□-4P

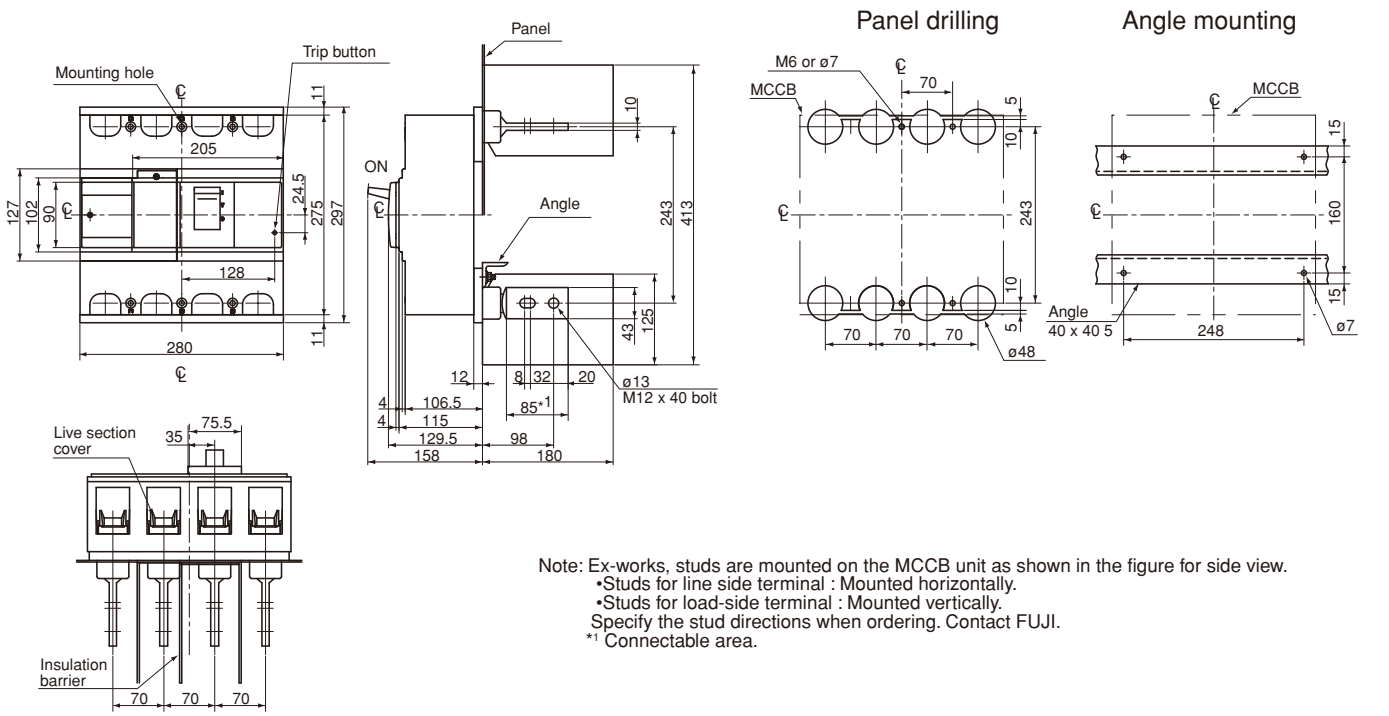

Note: Ex-works, studs are mounted on the MCCB unit as shown in the figure for side view.
•Studs for line side terminal : Mounted horizontally.
•Studs for load-side terminal : Mounted vertically.
Specify the stud directions when ordering. Contact FUJI.
*1 Connectable area.

■ Dimensions, mm

● Front mounting, front connection

BW50RAGU-2P

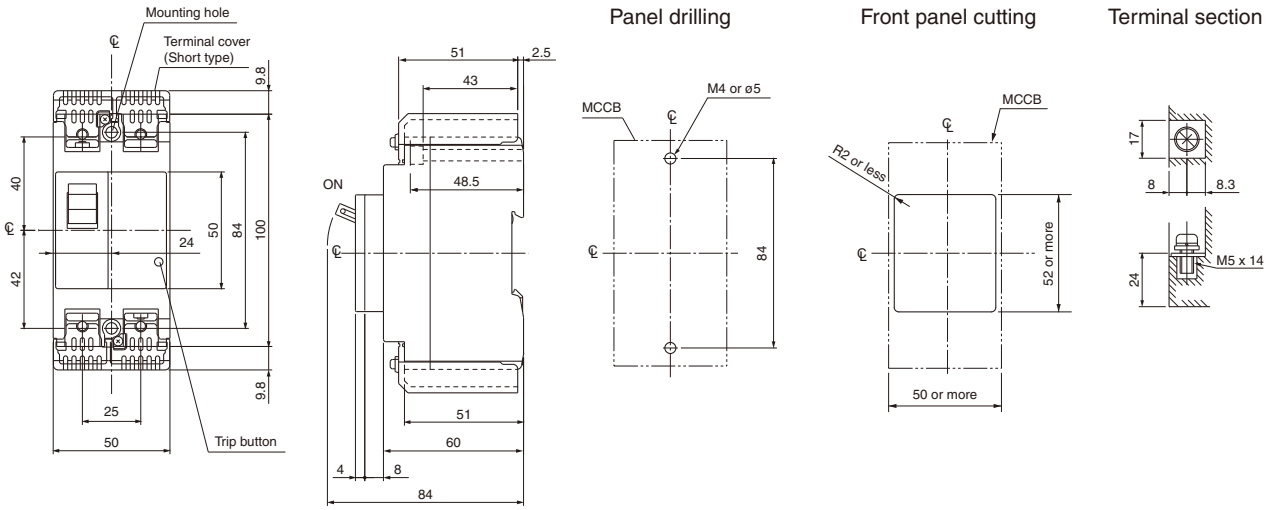

BW50RAGU-3P

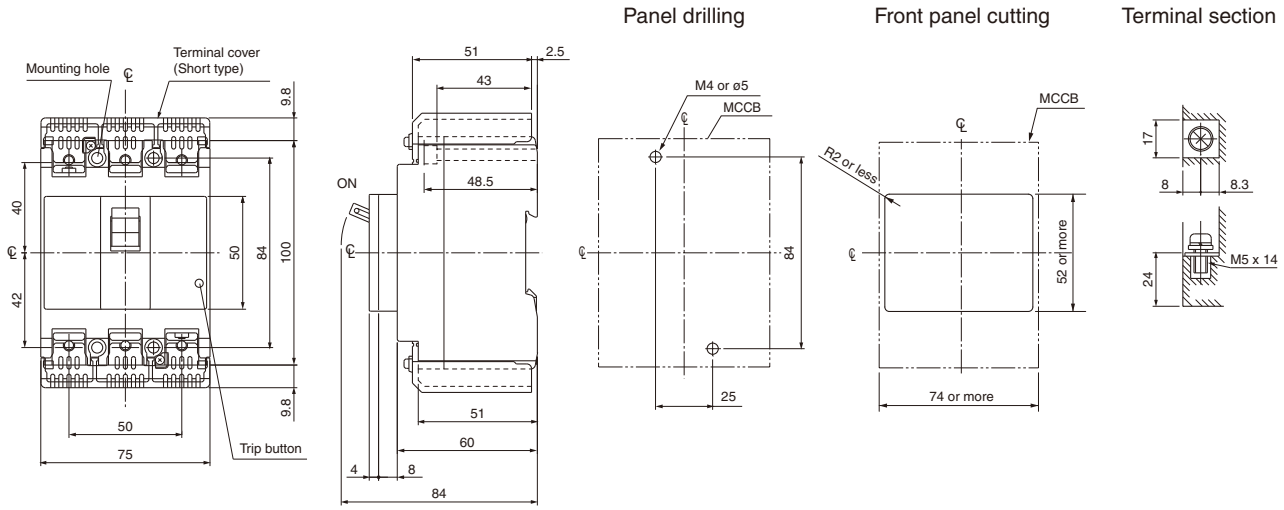

Molded Case Circuit Breakers
G-TWIN series Dimensions / Global

■ Dimensions, mm

● Front mounting, front connection

BW100EAGU-2P

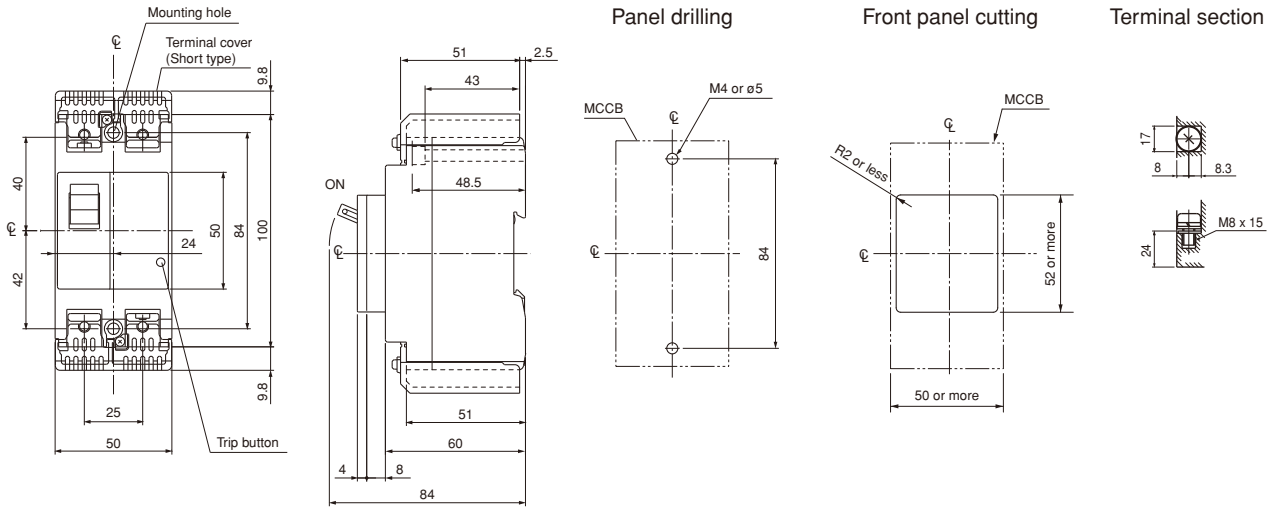

BW100EAGU-3P

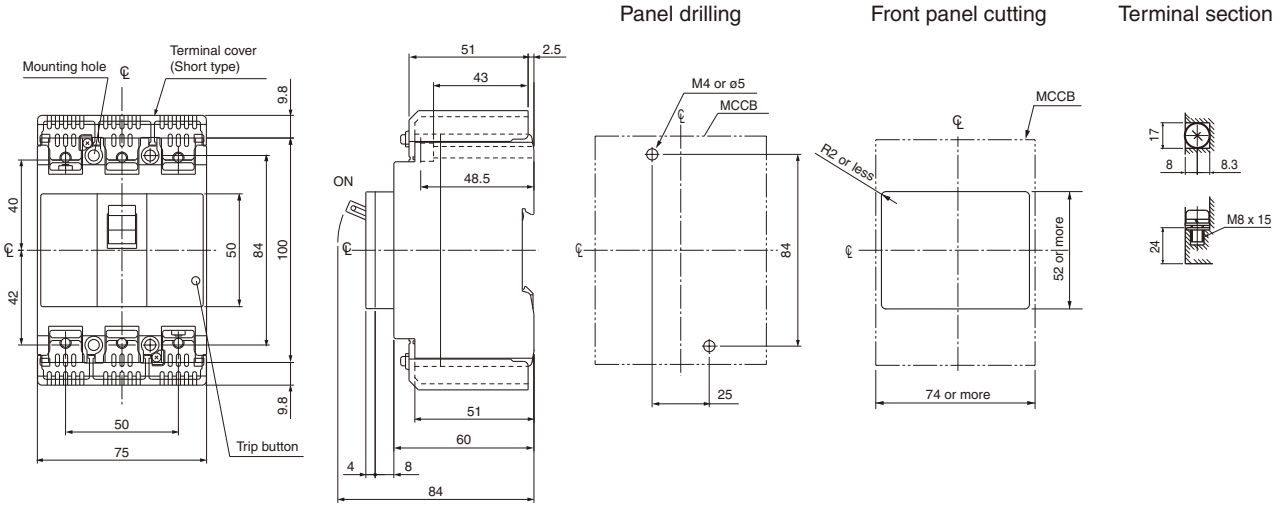

Fuji Electric FA Components & Systems Co., Ltd.
Information subject to change without notice

■ Dimensions, mm

● Front mounting, front connection

BW125□U-2P, 3P

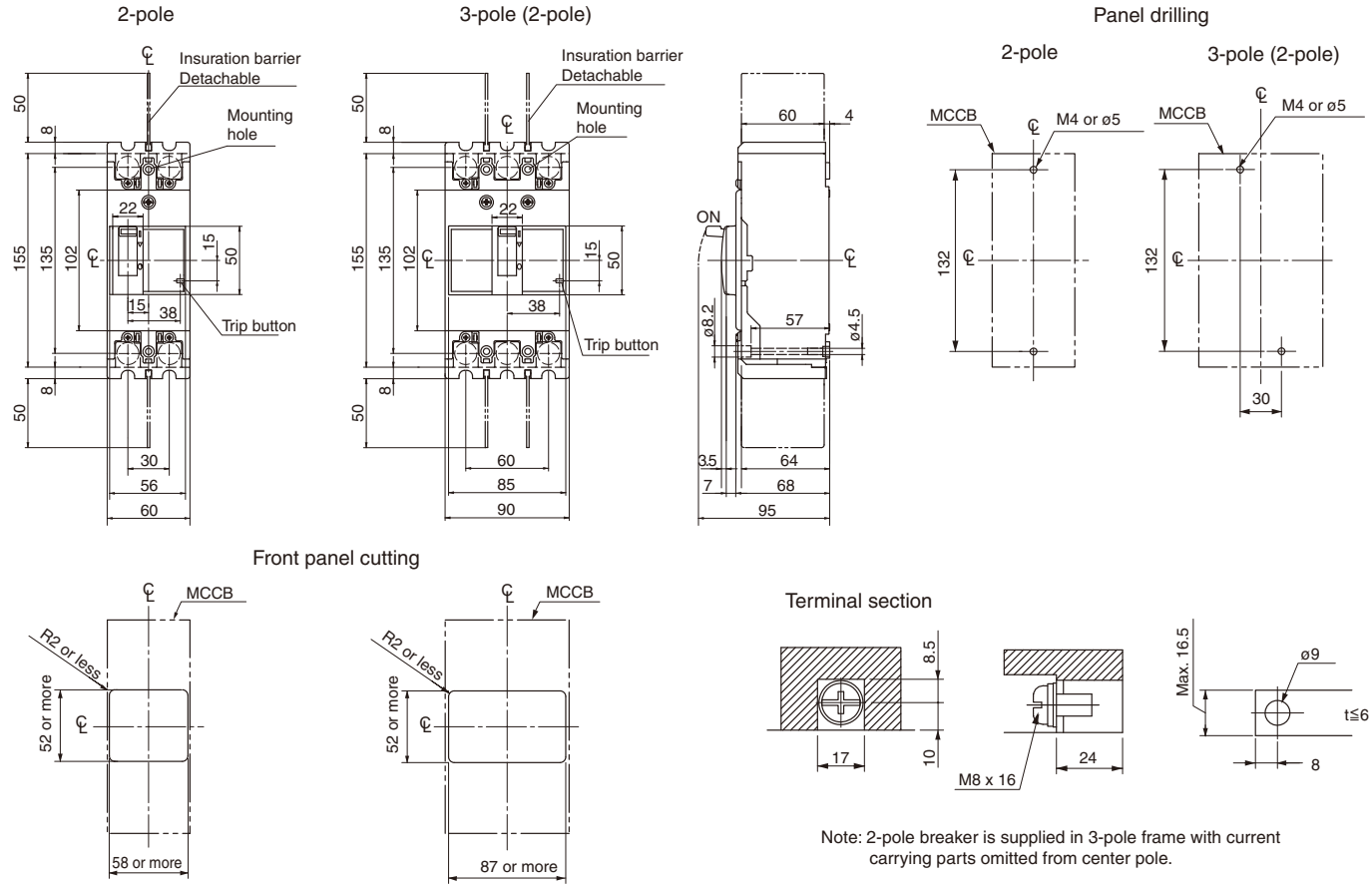

Note: 2-pole breaker is supplied in 3-pole frame with current carrying parts omitted from center pole.

BW250□U-2P, 3P

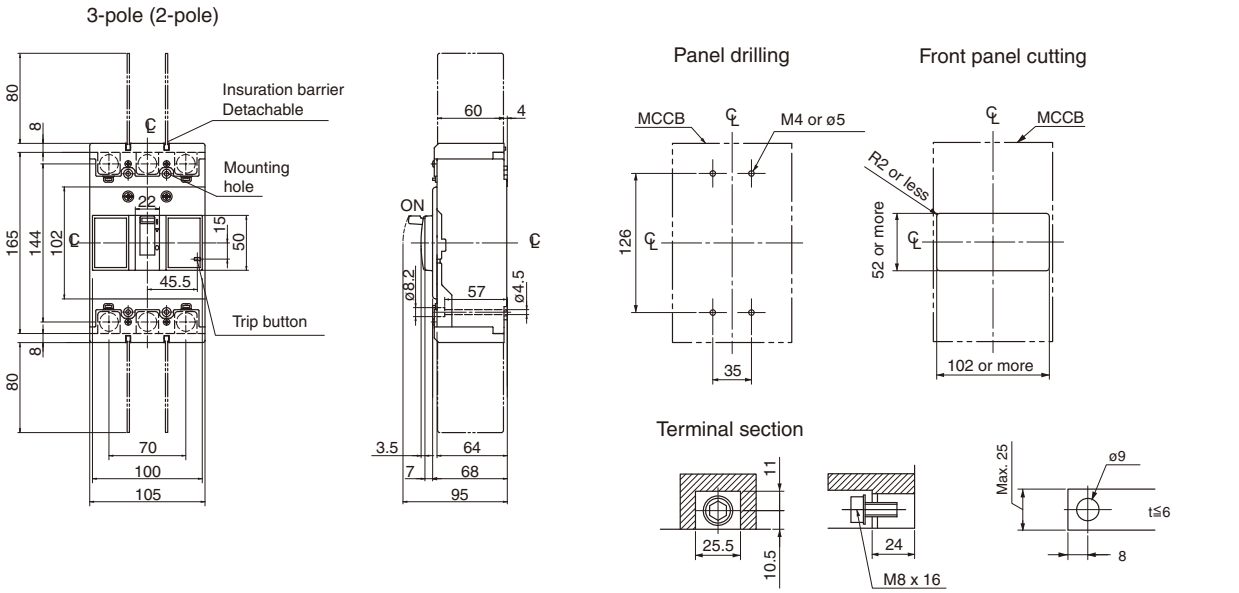

Note: 2-pole breaker is supplied in 3-pole frame with current carrying parts omitted from center pole.

Molded Case Circuit Breakers
G-TWIN series Dimensions / Global

■ Dimensions, mm

● Front mounting, front connection

BW400□U-2P, 3P

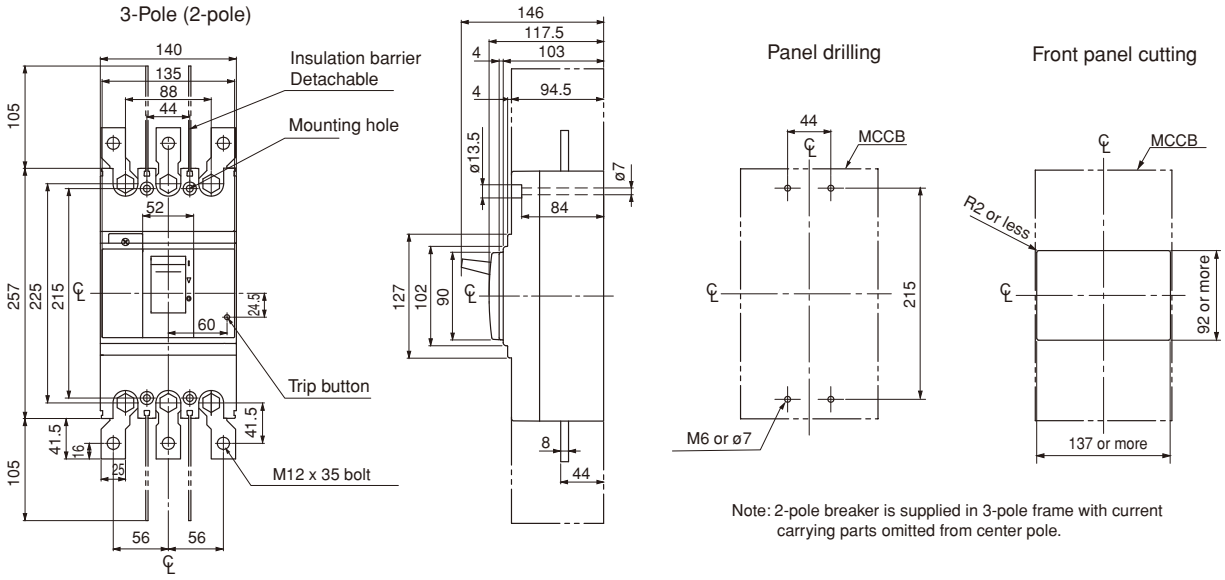

Note: 2-pole breaker is supplied in 3-pole frame with current carrying parts omitted from center pole.

BW630□U-3P

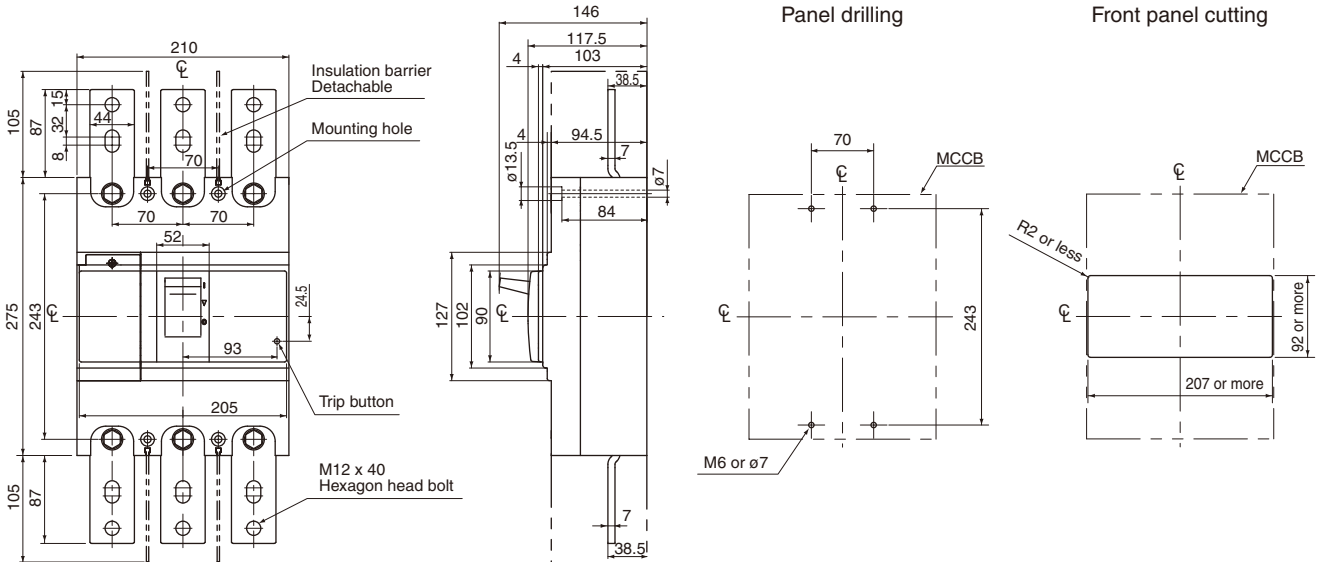

Fuji Electric FA Components & Systems Co., Ltd.
Information subject to change without notice

■ Dimensions, mm

● Front mounting, front connection

BW800□U-3P

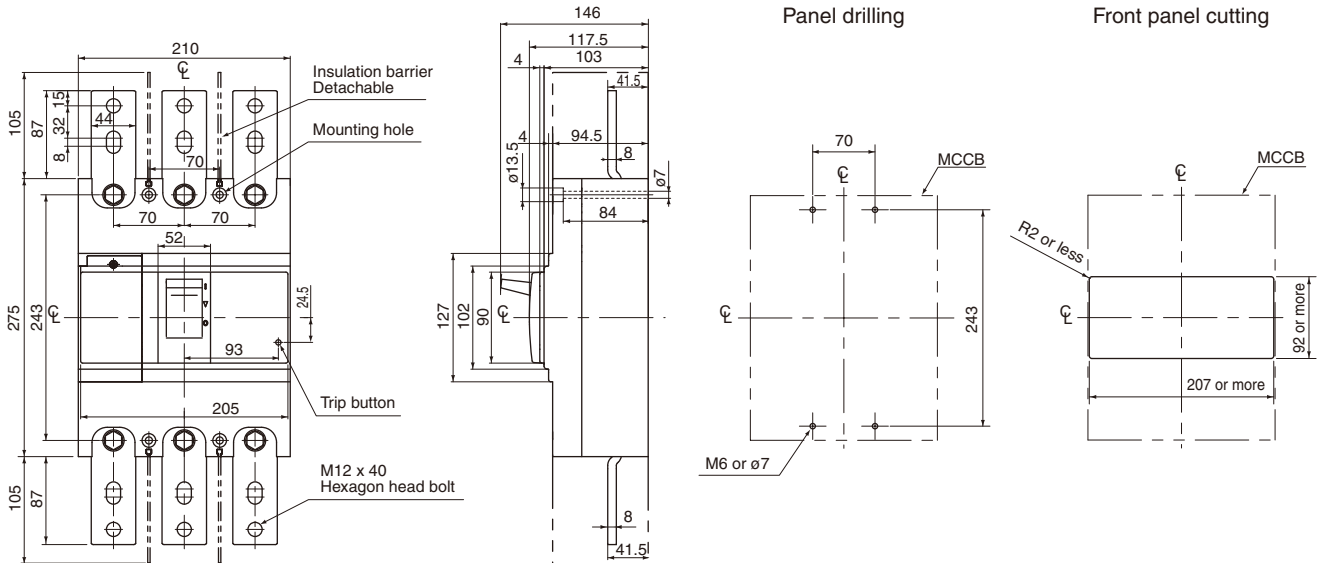

Molded Case Circuit Breakers
G-TWIN series Characteristic curves

■ Characteristic curves / Line protection

BW32, 50(A,E,S,R), 63, 100

Rated current: 5, 10, 32, 40, 60, 63, 70, 75, 80, 90A

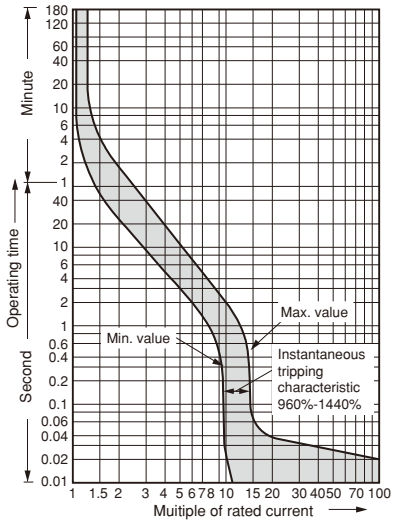

Rated current: 3, 15, 20, 30, 50,100A

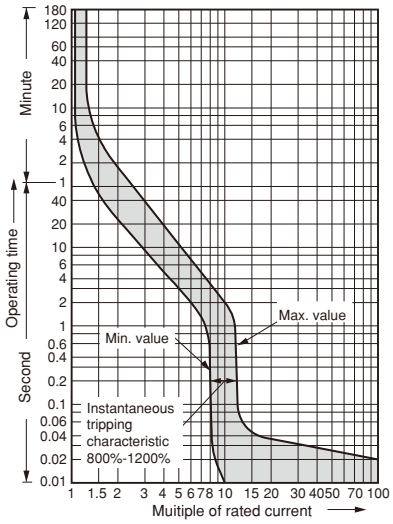

Temperature correction curve

Reference temp. 40℃

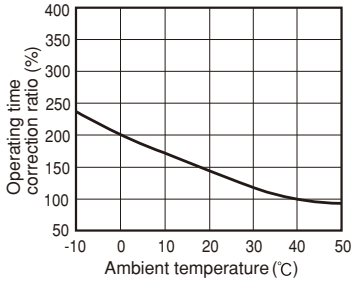

BW50HAG, BW125

• 15A

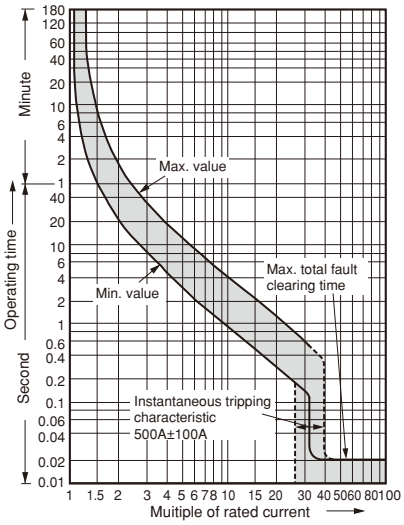

• 20A

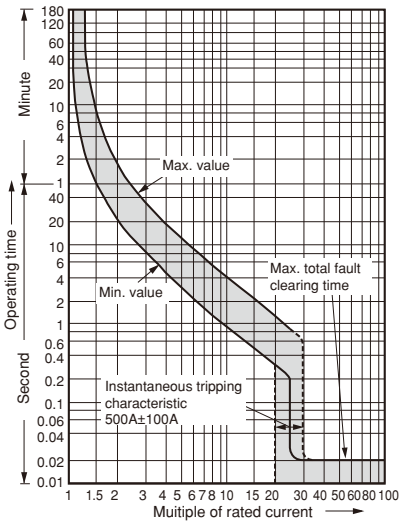

• 30A

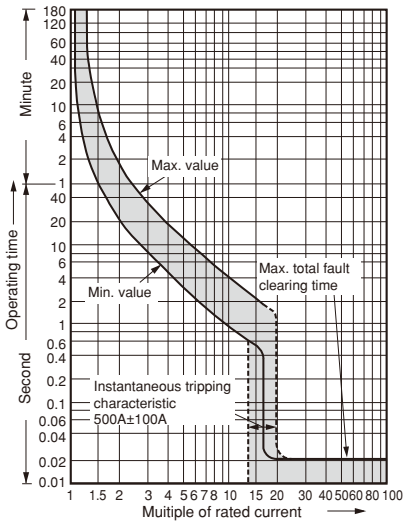

Temperature correction curve

• 15-30A

Reference temp. 40°C

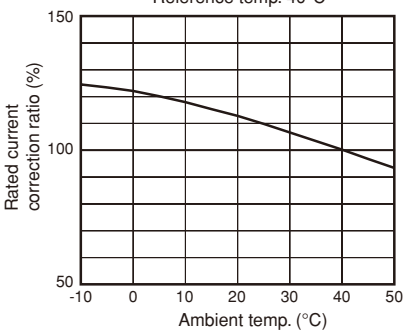

Fuji Electric FA Components & Systems Co., Ltd.
Information subject to change without notice

■ Characteristic curves / Line protection

BW50HAG, BW125

• 40A

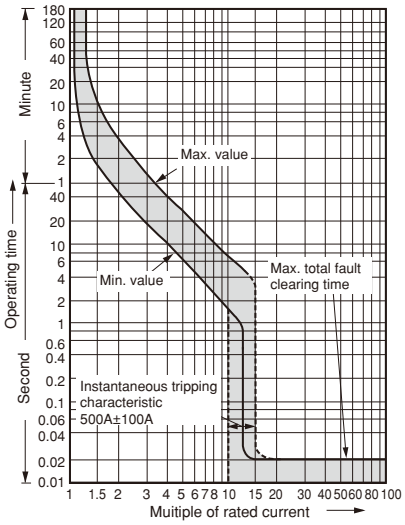

• 50-125A

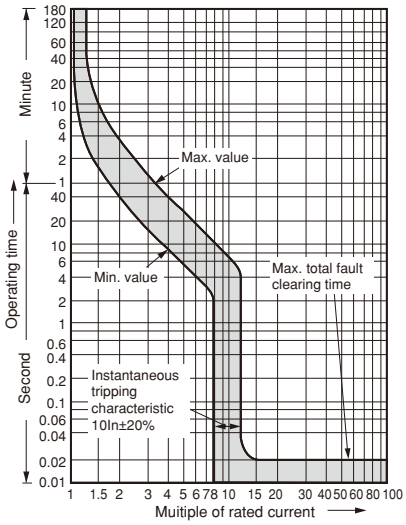

Temperature correction curve

• 40-125A

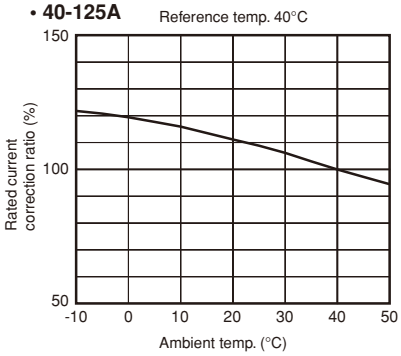

BW160, 250

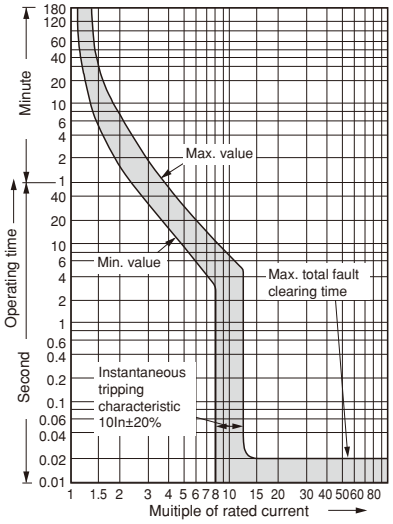

Temperature correction curve

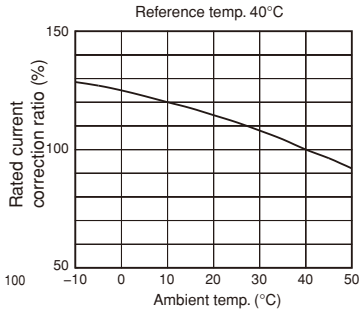

BW400

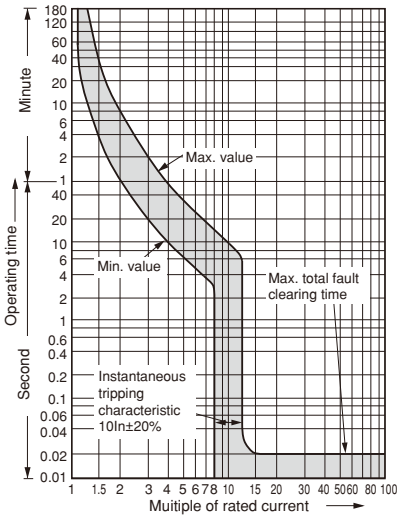

Temperature correction curve

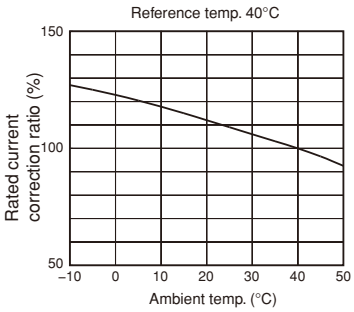

Molded Case Circuit Breakers
G-TWIN series Characteristic curves

■ Characteristic curves / Line protection

BW630

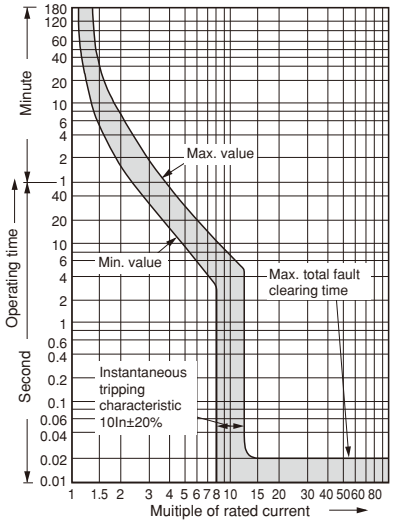

Temperature correction curve

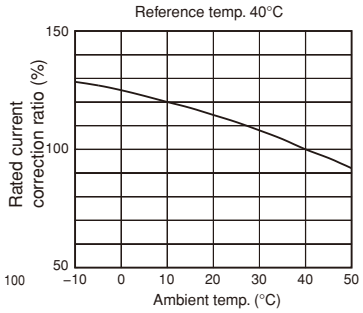

BW800

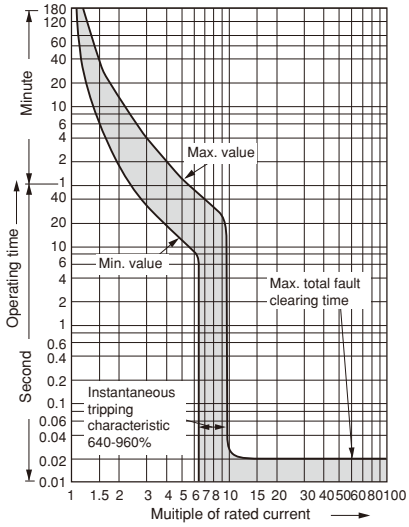

Temperature correction curve

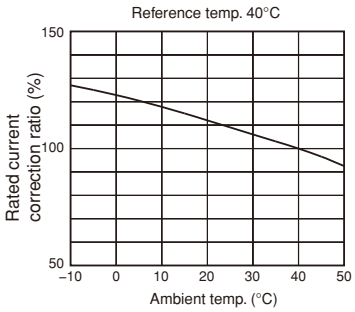

Fuji Electric FA Components & Systems Co., Ltd.
Information subject to change without notice

■ Characteristic curves / Motor protection

BW32, 50, 63, 100

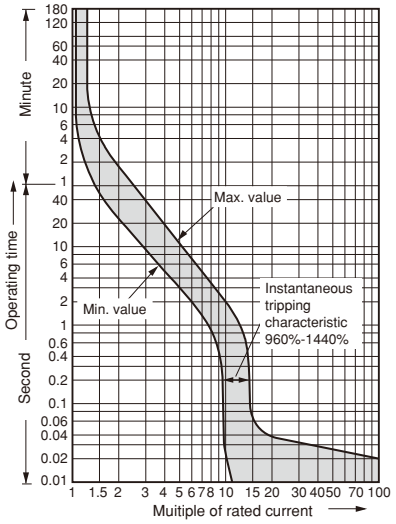

Temperature correction curve

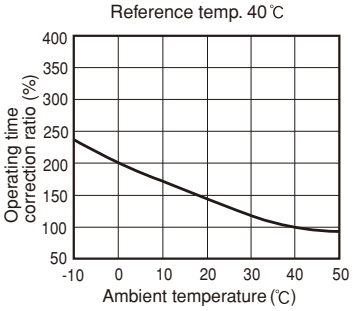

BW125

• 16A

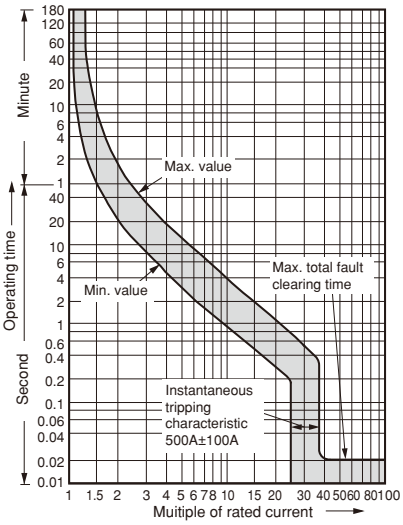

• 24A

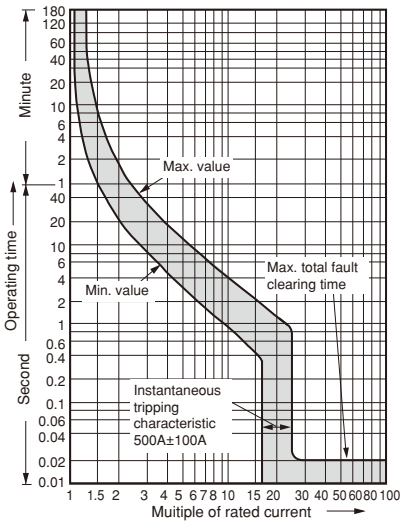

• 32A

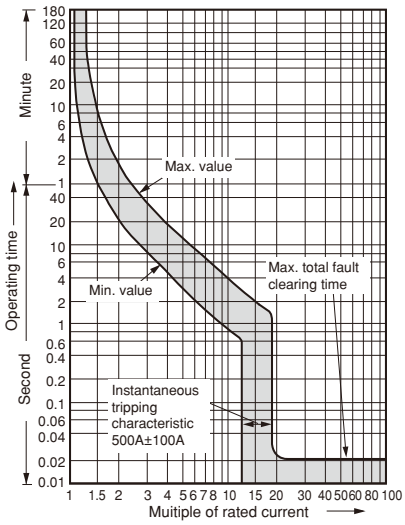

• 40-90A

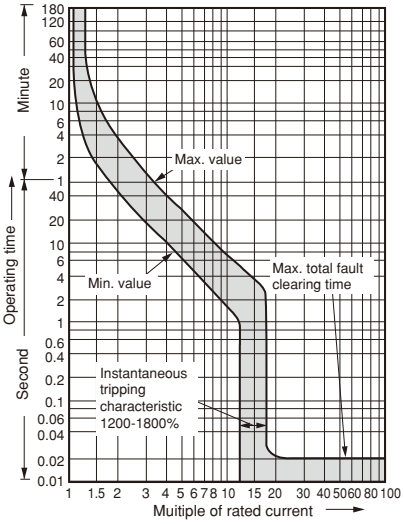

Temperature correction curve

• 15-32A

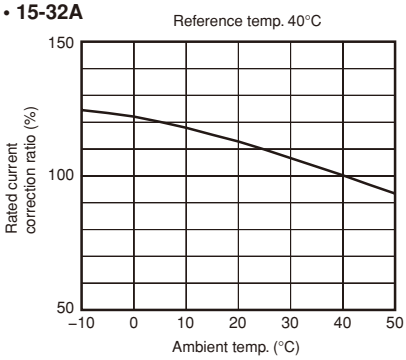

• 40-125A

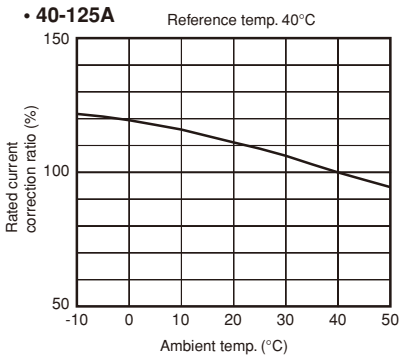

Molded Case Circuit Breakers
G-TWIN series Characteristic curves

■ Characteristic curves / Motor protection

BW250

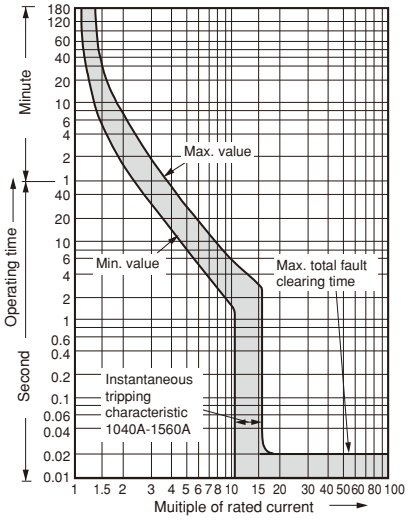

Temperature correction curve

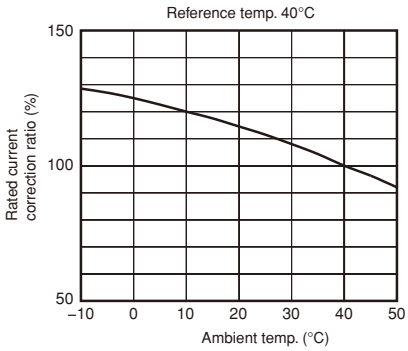

■ Variation of internal accessory

● **32 to100AF**

Auxiliary switch (Type W)

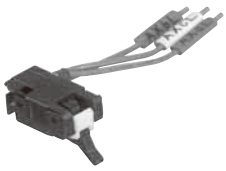

This switch is used for indicator lamp or control circuit.
See page B1-69.

Alarm switch (Type K)

This switch can be connected to a warning lamp or buzzer to indicate when the breaker has been tripped.
See page B1-69.

Shunt trip device (Type F)

The purpose of this accessory is to trip the breaker from a distance.
See page B1-70.

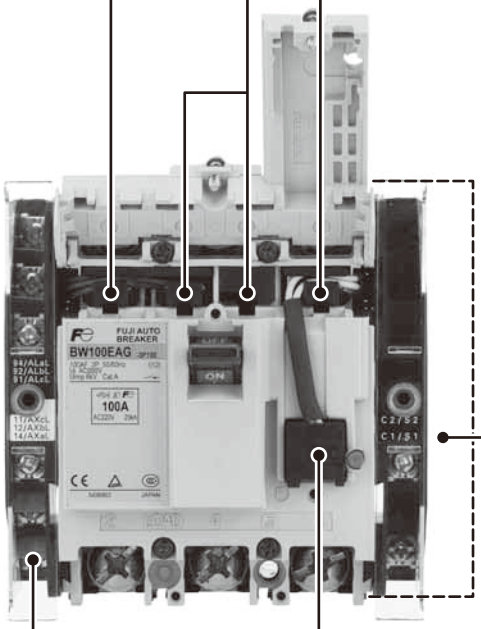

Undervoltage trip device (Type R)

The device is designed to protect circuits from harmful voltage drops.
It can also be used for remote control purposes. The trip operates when the voltage drops to less than 70% of nominal coil rating, and the breaker cannot be reset until the voltage recovers 85% of its normal rating.
See page B1-70.

Terminal block (Type A)

A wiring terminal for internal accessories (Order with W, K or F)
See page B1-71.

Molded Case Circuit Breakers
G-TWIN series Accessories

■ Variation of internal accessory

● **125 to 250AF**

Auxiliary switch (Type W)

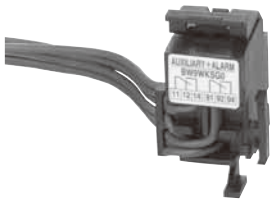

This switch is used for indicator lamp or control circuit.
See page B1-69.

Alarm switch (Type K)

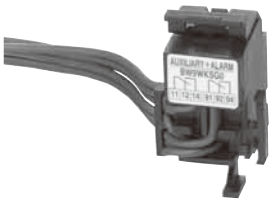

This switch can be connected to a warning lamp or buzzer to indicate when the breaker has been tripped.
See page B1-69.

Shunt trip device (Type F)

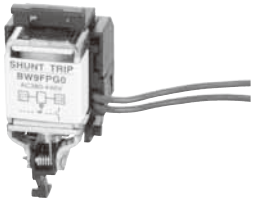

The purpose of this accessory is to trip the breaker from a distance.
See page B1-70.

Undervoltage trip device (Type R)

The device is designed to protect circuits from harmful voltage drops.
It can also be used for remote control purposes. The trip operates when the voltage drops to less than 70% of nominal coil rating, and the breaker cannot be reset until the voltage recovers 85% of its normal rating.
See page B1-70.

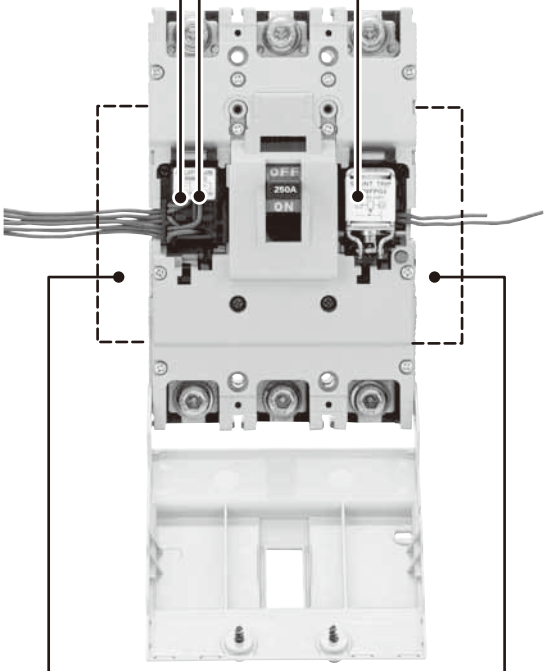

Terminal block (Type A)

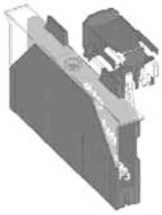

A wiring terminal for internal accessories (Factory-mounted)
See page B1-71.

■ Variation of internal accessory

● **400 to 800AF**

Alarm switch (Type K)

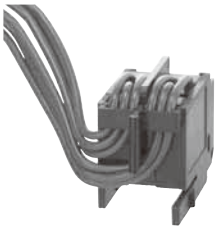

This switch can be connected to a warning lamp or buzzer to indicate when the breaker has been tripped.
See page B1-69.

Shunt trip device (Type F)

The purpose of this accessory is to trip the breaker from a distance.
See page B1-70.

Terminal block (Type A)

A wiring terminal for internal accessories (Factory-mounted)
See page B1-71.

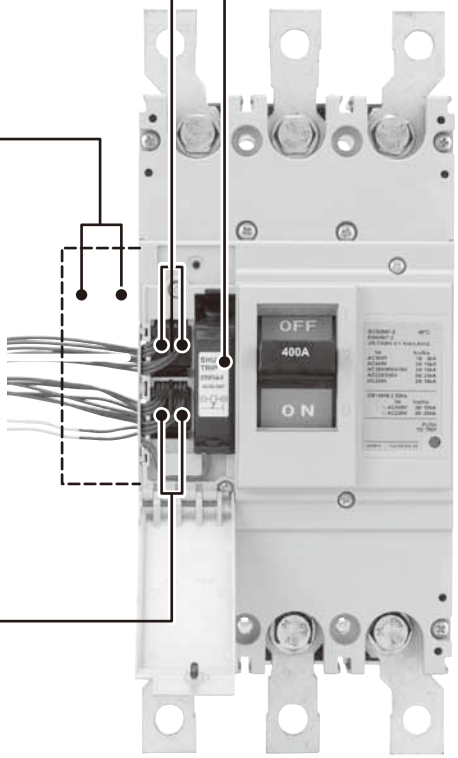

Undervoltage trip device (Type R)

The device is designed to protect circuits from harmful voltage drops.
It can also be used for remote control purposes. The trip operates when the voltage drops to less than 70% of nominal coil rating, and the breaker cannot be reset until the voltage recovers 85% of its normal rating.
See page B1-70.

Auxiliary switch (Type W)

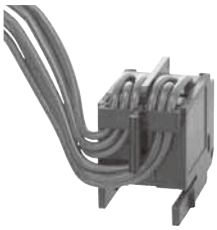

This switch is used for indicator lamp or control circuit.
See page B1-69.

Molded Case Circuit Breakers
G-TWIN series Accessories

■ Variation of external accessory

External operating handles

• **N-type**
See page B1-79.

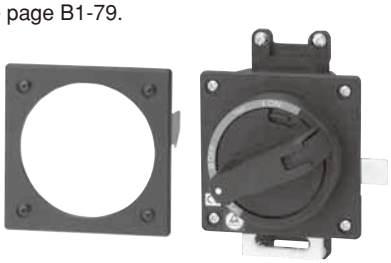

• **V-type**
See page B1-79.

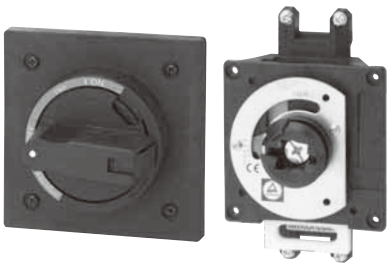

• **F-type**
See page B1-79.

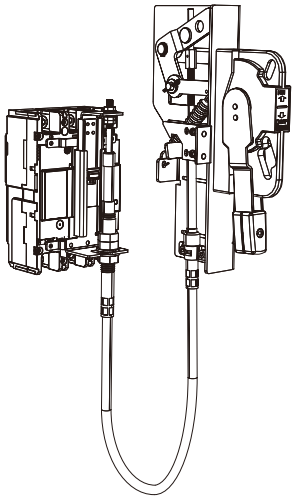

Terminal cover
Long type
See page B1-90.

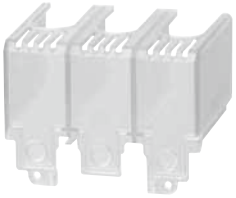

Interphase barrier
See page B1-91.

Terminal cover
Short type
See page B1-90.

Steel enclosures
See page B1-88.

Mechanical interlock device
See page B1-75.

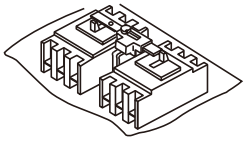

Motor-operating mechanism
See page B1-74.

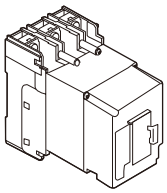

Handle locking cover (L1)
See page B1-92.

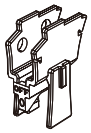

Padlocking device
See page B1-92.

• **Cap type (Q1, QN)**

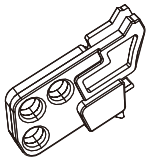

• **Plate type (Q2)**

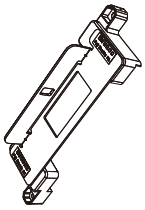

■ Terminal blocks for auxiliary circuit

- It indicates the terminal No. of internal accessory.The connection method of internal accessory is lead-wire system and terminal block system.
- For the available configuration of internal accessory, *see page B1-68.*

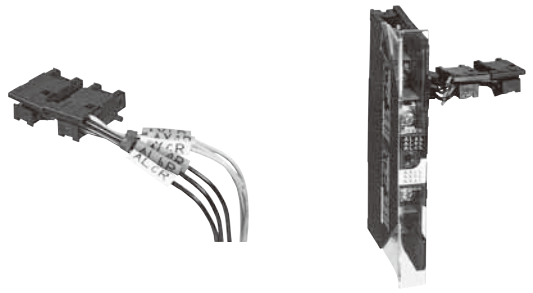

Lead-wire wiring **With terminal block**

● Terminal number of internal accessory

Accessory		32 – 250AF		400 – 800AF
		Left side mounting	Right side mounting	Left side mounting
Auxiliary switch	SPDT: W (1)*	11 12 14 AXcL AXbL AXaL	21 22 24 AXcR AXbR AXaR	11 12 14 AXc AXb AXa
	2PDT: V (2)*	11 12 14 AXcL AXbL AXaL	21 22 24 AXcR AXbR AXaR	11 12 14 AXc AXb AXa 21 22 24 AXc AXb AXa
Alarm switch	SPDT: K (8)*	91 92 94 ALcL ALbL ALaL	01 02 04 ALcR ALbR ALaR	91 92 94 ALc ALb ALa
	2PDT: J (9)*	91 92 94 ALcL ALbL ALaL	01 02 04 ALcR ALbR ALaR	91 92 94 ALc ALb ALa 01 02 04 ALc ALb ALa
Shunt trip device : F	With 1NO contact to prevent coil burn-out	C2 C1 S2 S1		—
	Continuous rating	—		C2 C1 S2 S1
Undervoltage trip device : R		U< D2 D1 P2 P1		

Note: * ( ) Code of Low level circuit

Molded Case Circuit Breakers
G-TWIN series Internal accessories

■ Available configurations

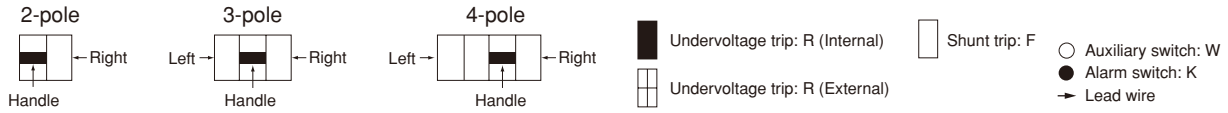

MCCB	BW32□-2P BW50□-2P BW63□-2P BW100□-2P	BW32□-3P BW50□-3P BW63□-3P BW100□-3P	BW125JAG-2P BW125JAGU-2P	BW125 BW160 BW250 (Except for BW125JAG-2P, BW125JAGU-2P)		BW400 BW630 BW800
Pole	2	3	2	2, 3	4	2, 3, 4
Auxliary switch SPDT: W (1)*						
Alarm switch SPDT: K (8)*						
Shunt trip: F						
Undervoltage trip: R	*2	*2				
W+K (1+8)						
Auxliary switch 2PDT: V (2)						
Alarm switch 2PDT: J (9)						
V+K (2+8)						
W+J (1+9)						
V+J (2+9)						
W+F (1+F)						
W+R (1+R)	*2 *1	*2				
K+F (8+F)						
K+R (8+R)	*2 *1	*2				
W+K+F (1+8+F)						
W+K+R (1+8+R)	*2 *1	*2				
V+F (2+F)						
V+R (2+R)		*2 *1				
J+F (9+F)						
J+R (9+R)		*2 *1				
V+K+F (2+8+F)						
V+K+R (2+8+R)		*2 *1				
W+J+F (1+9+F)						
W+J+R (1+9+R)		*2 *1				
V+J+F (2+9+F)					*1	
V+J+R (2+9+R)		*2 *1			*1	

Notes: •The above table is applied to front mounting type, rear mounting type, flush mounting type, and plug-in mounting type.
• Terminal block is attached on the same side of the accessory.
• ( ) Code of low level circuit □:See page B1-2.
*1 Configurations with terminal block are not available.
*2 Flush mounting, rear contection type breakers of 100AF or less are not available.

Fuji Electric FA Components & Systems Co., Ltd.
Information subject to change without notice

■ Operation of auxiliary switches(W) and alarm switches(K)

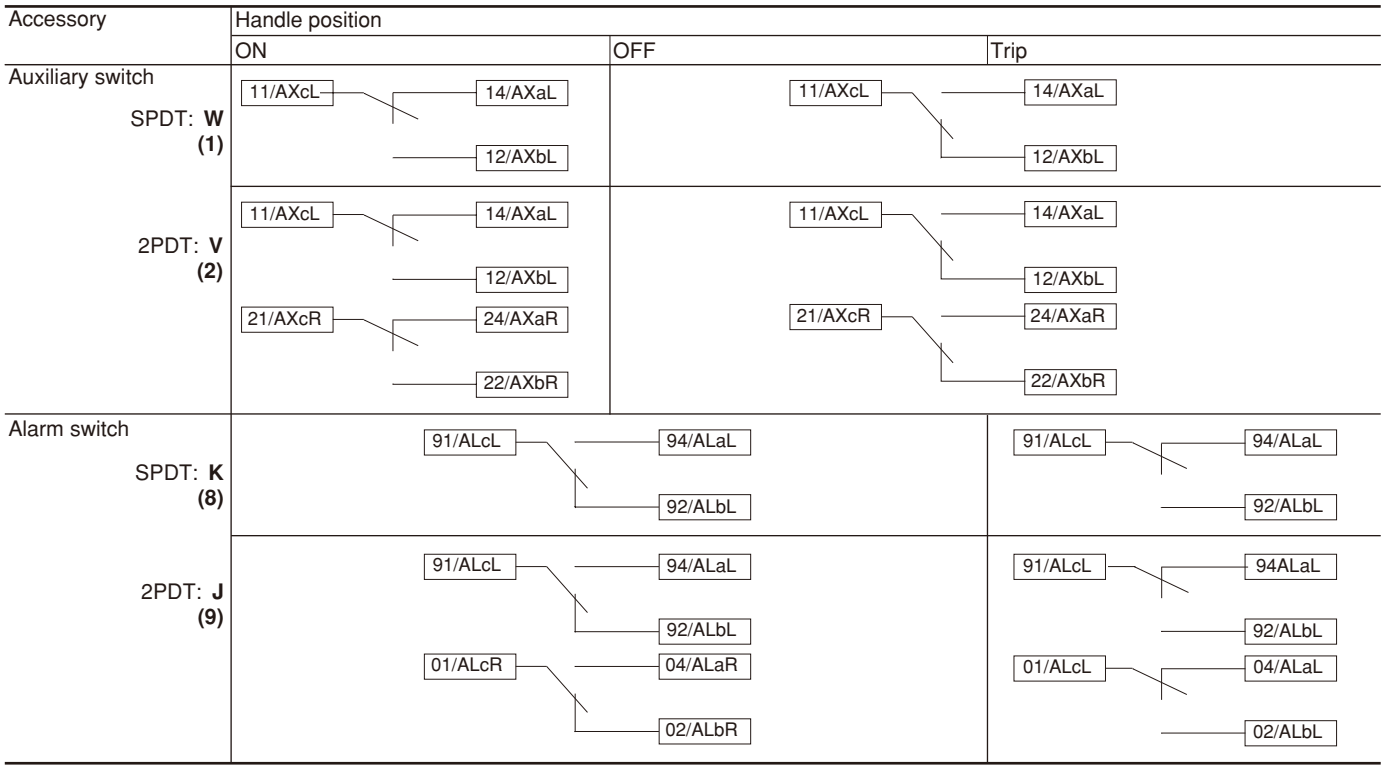

Note: ▭ Ring mark indication
( ) Code of low level circuit

■ Ratings of auxiliary switches(W) and alarm switches(K)

● 32-100AF

	IEC60947-5-1			NECA C4505		Minimum load current
	Voltage (V)	Make/break current (A)		Voltage (V)	Make/break current (A)	
		AC 15	DC 13		Res. load	
Standard type	125 AC	5	–	125 AC	5	5V DC 160mA 30V DC 30mA
	250 AC	5	–	250 AC	3	
	–	–	–	30 DC	4	
	125 DC	–	0.6	125 DC	0.4	
	250 DC	–	0.3	250 DC	0.2	
Low level circuit	–	–	–	30 DC	0.1	5V DC 1mA

● 125-800AF

	Rated thermal current (A)	Rated operational current (A)						Minimum load current
		AC			DC			
		Rated operational Voltage (V)	Res. load	Ind. load	Rated operational Voltage (V)	Res. load	Ind. load	
Standard type	5	24	5	5	24	4	3	5V DC 160mA 30V DC 30mA
		48	5	5	48	2.5	1	
		125	5	3	125	0.4	0.4	
		250	3	2	250	0.2	0.2	
Low level circuit	0.1	30	0.1	–	30	0.1	–	5V DC 1mA

Molded Case Circuit Breakers
G-TWIN series Internal accessories

■ Rating of shunt trip (F)

MCCB type	AC		DC		Code	Time rating of coil	Opearting time (ms)
	V	VA	V	W			
BW32 **BW50** **BW63** **BW100**	100-120	150	100-110	150	FAC100-120V/ DC100-110V	Continuous (With 1NO contact to prevent coil burn-out)	7-13
	200-240	150	–	–	FAC200-240V		
	380-450	200	–	–	FAC380-450V		
	24	150	24	150	FAC/DC24V		
BW125 **BW160** **BW250**	24	50	24	50	FAC/DC24V		13-21
	48	50	48	50	FAC/DC48V		
	100-120	50	100-110	50	FAC100-120V/ DC100-110V		
	120-130	50	–	–	FAC120-130V		
	200-240	50	200-220	50	FAC200-240V/ DC200-220V		
	277	50	–	–	FAC277V		
	380-440	50	–	–	FAC380-440V		
	440-480	50	–	–	FAC440-480V		
	500-550	50	–	–	FAC500-550V		
BW400 **BW630** **BW800**	24-48	2	24-48	2	FAC/DC24-48V	Continuous	8-20
	100-240	3	100-220	3	FAC100-240V DC100-220V		
	277	3		–	FAC277V		
	380-550	4		–	FAC380-550V		

Note: The operating tripping voltage range for shunt trip devices is 70% to 110% of the rated operating voltage.

■ Rating of undervoltage trip (R)

MCCB type	Installation	AC		DC		Code
		V	VA	V	W	
BW32 *2 **BW50** *2 **BW63** *2 **BW100** *2	External	100 (50Hz)/ 100-110(60Hz)	2.8	–	–	RAC100(50Hz)/ 100-110V(60Hz)
		200 (50Hz)/ 200-220 (60Hz)	3.4	–	–	RAC200(50Hz)/ 200-220V(60Hz)
		400 (50Hz)/ 400-440 (60Hz)	4.4	–	–	RAC400(50Hz)/ 400-440V(60Hz)
		–	–	24	40	RDC24V
				100-110		RDC100-110V
BW125 *1 **BW160** *1 **BW250** *1	Internal	–	–	24	5	RDC24V
		–	–	48	5	RDC48V
		–	–	100-110	5	RDC100-110V
		–	–	125	5	RDC125V
		100-110	5	–	–	RAC100-110V
		110-130	5	–	–	RAC110V-130V
		200-240	5	–	–	RAC200-240V
		277	5	–	–	RAC277V
		380-415	5	–	–	RAC380-415V
		440-480	5	–	–	RAC440V-480V
BW400 *2 **BW630** *2 **BW800** *2	Internal	24	2	24	2	RAC/DC24V
		48	2	48	2	RAC/DC48V
		100-110	3	100-110	3	RAC/DC100-110V
		120-130	3	125	3	RAC120-130V/DC125V
		200-240	3	200-220	3	RAC200-240V/DC200-220V
		277	3	–	–	RAC277V
		380-480	4	–	–	RAC380-480V

Notes: • The operating voltages of undervoltage tripping devices are as follows:
Tripping voltage: 35% to 70% of rated voltage, closing voltage: 85% to 110% of rated voltage.

*1 Reset-allowed type: When the breaker handle is in the OFF or RESET state, tripping does not occur even if the R coil is not energized. Turning ON with the R coil not energized causes normal tripping.

*2 Reset-prohibited type: When the R coil is not energized, reset operation cannot reset the tripped breaker to the OFF state.

■ Lead wire specification

AF	Pole	wire size	Wire length
32 to 100AF	–	0.4mm^2 (AWG22)	Ca 500mm
125 to 250AF	2P, 3P	0.5mm^2 (AWG20)	
	4P		
400 to 800AF	2P, 3P	0.5mm^2	Ca 500mm
	4P		Ca 400 to 450mm

■ Terminal blocks

32AF, 50AF, 63AF, 100AF

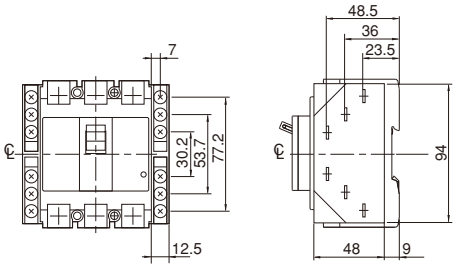

125AF, 160AF, 250AF

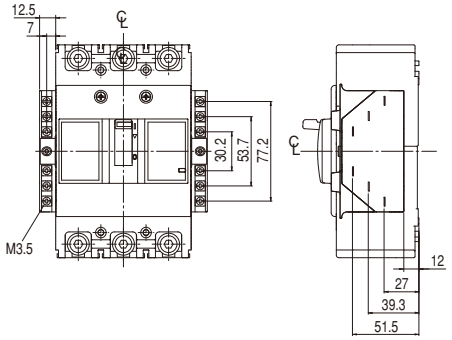

400AF, 630AF, 800AF

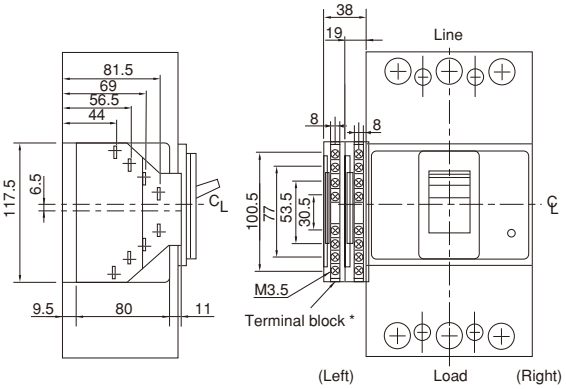

Notes:
* If the chosen combination has more than 8 terminals, 2 terminal blocks are mounted.
• Mount the terminal block on the surface on which the accessories are mounted. See the table of the combinations of internal accessories on pages B1-68. for information on the accessory mounting position.
• Available wire: Solid wire: 1.6ø Stranded wire: 2mm^2
• Terminal blocks are available as factory mounted only.

■ Undervoltage trip device

32AF, 50AF, 63AF, 100AF

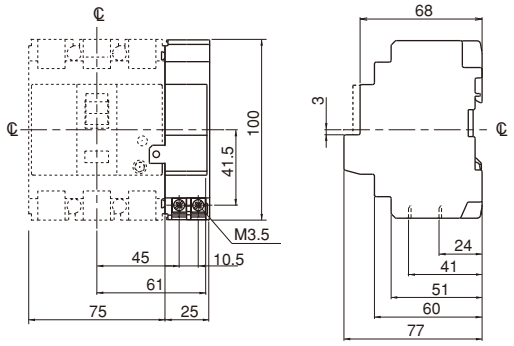

Mass: 0.15kg

Molded Case Circuit Breakers
G-TWIN series Internal accessories

■ Type number

Internal accessories (Sold separately)

● 32, 50, 63, 100AF IEC/EN/GB/JIS conformed

Accessory	Type				Operating voltge
	Lead wire system		Terminal block system		
	Left side	Right side	Left side	Right side	
Auxiliary switch	**BZ6WL10C**	**BZ6WR10C**	**BZ6WL10CA**	**BZ6WR10CA**	
Auxiliary switch (low level circuit)	**BZ6WDL10C**	**BZ6WDR10C**	**BZ6WDL10CA**	**BZ6WDR10CA**	
Alarm switch	**BZ6KL10C**	**BZ6KR10C**	**BZ6KL10CA**	**BZ6KR10CA**	
Alarm switch (low level circuit)	**BZ6KDL10C**	**BZ6KDR10C**	**BZ6KDL10CA**	**BZ6KDR10CA**	
Auxiliary switch + Alarm switch	**BZ6WKL10C**	**BZ6WKR10C**	**BZ6WKL10CA**	**BZ6WKR10CA**	
Auxiliary switch + Alarm switch (low level circuit)	**BZ6WDKDL10C**	**BZ6WDKDR10C**	**BZ6WDKDL10CA**	**BZ6WDKDR10CA**	
Shunt trip device	–	**BZ6FA10C**	–	**BZ6FA10CA**	100-120V AC/100-110V DC
	–	**BZ6FK10C**	–	**BZ6FK10CA**	200-240V AC
	–	**BZ6FP10C**	–	**BZ6FP10CA**	380-450V AC
	–	**BZ6FR10C**	–	**BZ6FR10CA**	24V AC/DC
Undervoltage trip device	–	–	–	**BZ6R210C**	100V AC 50Hz/100-110V AC 60Hz
	–	–	–	**BZ6R110C**	110V AC 50Hz/110-127V AC 60Hz
	–	–	–	**BZ6RW10C**	200V AC 50Hz/200-220V AC 60Hz
	–	–	–	**BZ6R410C**	220V AC 50Hz/220-240V AC 60Hz
	–	–	–	**BZ6R510C**	230V AC 50Hz/230-240V AC 60Hz
	–	–	–	**BZ6R810C**	240V AC 50Hz
	–	–	–	**BZ6R010C**	380V AC 50Hz 380-415V AC 60Hz
	–	–	–	**BZ6R910C**	400V AC 50Hz 400-440V AC 60Hz
	–	–	–	**BZ6RF10C**	24V DC
	–	–	–	**BZ6RT10C**	100-110V DC

● 50, 100AF IEC/EN/GB/JIS/UL/CSA conformed

Accessory	Type				Operating voltge
	Lead wire system		Terminal block system		
	Left side	Right side	Left side	Right side	
Auxiliary switch	**BZ6WL10CU**	**BZ6WR10CU**	**BZ6WL10CAU**	**BZ6WR10CAU**	
Auxiliary switch (low level circuit)	**BZ6WDL10CU**	**BZ6WDR10CU**	**BZ6WDL10CAU**	**BZ6WDR10CAU**	
Alarm switch	**BZ6KL10CU**	**BZ6KR10CU**	**BZ6KL10CAU**	**BZ6KR10CAU**	
Alarm switch (low level circuit)	**BZ6KDL10CU**	**BZ6KDR10CU**	**BZ6KDL10CAU**	**BZ6KDR10CAU**	
Auxiliary switch + Alarm switch	**BZ6WKL10CU**	**BZ6WKR10CU**	**BZ6WKL10CA**	**BZ6WKR10CAU**	
Auxiliary switch + Alarm switch (low level circuit)	**BZ6WDKDL10CU**	**BZ6WDKDR10CU**	**BZ6WDKDL10CAU**	**BZ6WDKDR10CAU**	
Shunt trip device	–	**BZ6FA10CU**	–	**BZ6FA10CAU**	100-120V AC/100-110V DC
	–	**BZ6FK10CU**	–	**BZ6FK10CAU**	200-240V AC
	–	**BZ6FP10CU**	–	**BZ6FP10CAU**	380-450V AC
Undervoltage trip device	–	–	–	**BZ6R210CAU**	100V AC 50Hz/100-110V AC 60Hz
	–	–	–	**BZ6RW10CAU**	110V AC 50Hz/110-127V AC 60Hz
	–	–	–	**BZ6R910CAU**	200V AC 50Hz/200-220V AC 60Hz

● 125, 160, 250AF IEC/EN/GB/JIS/UL/CSA conformed

Accessory	Type				Operating voltge
	Lead wire system		Terminal block system		
	Left side	Right side	Left side	Right side *	
Auxiliary switch	**BW9W1SG0**	**BW9W1SG0-R**	**BW9W1SG0-A**	–	–
Auxiliary switch (low level circuit)	**BW9W1DG0**	**BW9W1DG0-R**	**– ***		
Alarm switch	**BW9K1SG0**	**BW9K1SG0-R**	**BW9K1SG0-A**		
Alarm switch (low level circuit)	**BW9K1DG0**	**BW9K1DG0-R**	**– ***		
Auxiliary switch + Alarm switch	**BW9WKSG0**	**BW9WK1SG0-R**	**BW9WKSG0-A**		
Auxiliary switch + Alarm switch (low level circuit)	**BW9WKDG0**	**BW9WK1DG0-R**	**– ***		
Shunt trip device	**BW9FRG0**	**BW9FRG0**	**BW9FRG0-A**		24V AC/DC
	BW9FSG0	**BW9FSG0**	**BW9FSG0-A**		48V AC/DC
	BW9FAG0	**BW9FAG0**	**BW9FAG0-A**		100-120V AC/100-110V DC
	BW9F1G0	**BW9F1G0**	**BW9F1G0-A**		120-130V AC
	BW9FKG0	**BW9FKG0**	**BW9FKG0-A**		200-240V AC/200-220V DC
	BW9FBG0	**BW9FBG0**	**BW9FBG0-A**		277V AC
	BW9FPG0	**BW9FPG0**	**BW9FPG0-A**		380-440V AC
	BW9FHG0	**BW9FHG0**	**BW9FHG0-A**		440-480V AC
	BW9FJG0	**BW9FJG0**	**BW9FJG0-A**		500-550V AC
Undervoltage trip devics	**BW9RGAR**	–	**BW9RGAR-A**		24V DC
	BW9RGAS		**BW9RGAS-A**		48V DC
	BW9RGAL		**BW9RGAL-A**		100-110V DC
	BW9RGA5		**BW9RGA5-A**		125V DC
	BW9RGAA		**BW9RGAA-A**		100-110V AC
	BW9RGAT		**BW9RGAT-A**		110-130V AC
	BW9RGAK		**BW9RGAK-A**		200-240V AC
	BW9RGAB		**BW9RGAB-A**		277V AC
	BW9RGAP		**BW9RGAP-A**		380-415V AC
	BW9RGAH		**BW9RGAH-A**		440-480V AC

Note: * Factory-mounted

● 400, 630, 800AF IEC/EN/GB/JIS/UL/CSA conformed

Accessory	Type		Operating voltge
	Lead wire system	Terminal block system *	
	Left side		
Auxiliary switch x 1	**BW9W1SHA**	–	–
Auxiliary switch x 2	**BW9W2SHA**		
Auxiliary switch (low level circuit) x 1	**BW9W1DHA**		
Auxiliary switch (low level circuit) x 2	**BW9W2DHA**		
Alarm switch x 1	**BW9K1SHA**		
Alarm switch x 2	**BW9K2SHA**		
Alarm switch (low level circuit) x 1	**BW9K1DHA**		
Alarm switch (low level circuit) x 2	**BW9K2DHA**		
Shunt trip device	**BW9FHA-R**		24-48V AC/DC
	BW9FHA-A		100-240V AC/100-220V DC
	BW9FHA-B		277V AC
	BW9FHA-P		380-550V AC
Undervoltage trip devics	**BW9RHA-R**		24V AC/DC
	BW9RHA-S		48V AC/DC
	BW9RHA-A		100-110 AC/DC
	BW9RHA-1		120-130V AC/125V DC
	BW9RHA-K		200-240V AC/200-220V DC
	BW9RHA-B		277V AC
	BW9RHA-P		380-480V AC

Note: * Factory-mounted

Molded Case Circuit Breakers
G-TWIN series External accessories

Motor-operated breakers

■ Description

The breaker is fitted with a motor operating mechanism which enables ON, OFF and RESET operations to be carried out electronically by remote control.

The breakers do not conform to IEC and EN standard.

■ Type and ratings

MCCB type	Motor rating			Power source capacity	Mass (kg)
	Operating voltage	Operating time	Time rating		
BW32□-3P□M, BW50□-3P□M, BW63□-3P□M, BW100□-3P□M	100V DC 100/110V AC 200/220V AC	0.1s	15s per on-off operation	500VA	1.2
					1.3

■ Ordering information

Specify the following:
1. Type number
2. Motor operating voltage

■ Dimensions, mm / Front mounting, front connection

BW32□-3P, BW50□-3P, BW63□-3P, BW100□-3P,

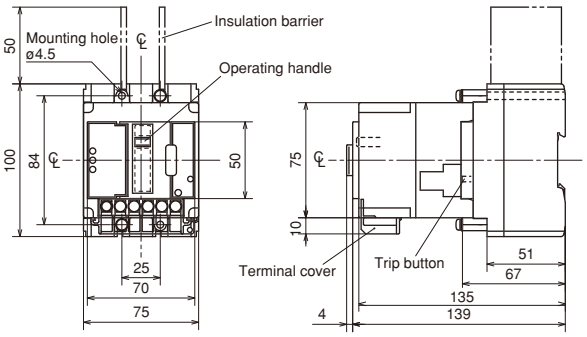

Panel drilling

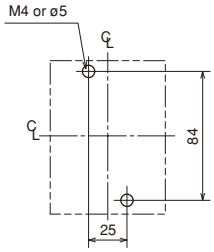

Panel cutting

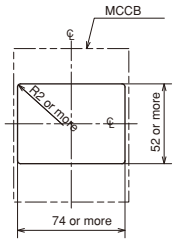

Mass: 1.2kg (BW32 or BW50 type with motor operating mechanism)
1.3kg (BW63 or BW100 type with motor operating mechanism)

Notes: • Trip button operation can be carried out at right side of the breaker.
• IEC 35mm wide mounting rail is not available.

■ Wiring diagrams

100/110V AC, 200/220V AC, 100V DC

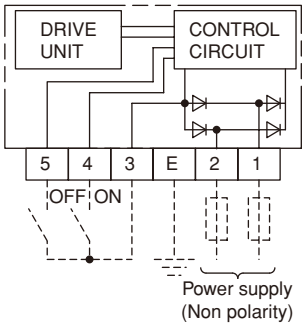

Mechanical interlocking devices

■ Description

These interlocking devices are mounted on the two separate breakers to prevent them from both being closed at the same time.
A sliding mechanism that can be locked with a padlock is used. (The padlock is not included.)
They are designed for use when changing over power supplies.
These can be mounted to 3 types of breakers: front-mounting front-connection type, front-mounting rear-connection type (type X), and plug-in mounting type (type P).
Interlock devices for flush mounting type breakers (type E, Y) are also available.

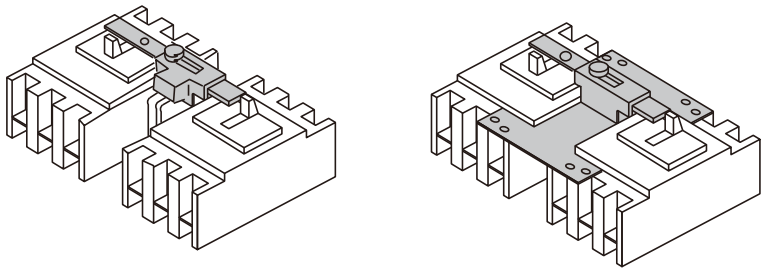

M1 types

■ Type and applicable breakers

Type	Breaker type
BZ6M110C2	BW32AAG-2P, BW32SAG-2P BW50AAG-2P, BW50EAG-2P, BW50SAG-2P, BW50RAG-2P BW63EAG-2P, BW63SAG-2P, BW63RAG-2P BW100EAG-2P
BZ6M110C3	BW32AAG-3P, BW32SAG-3P BW50AAG-3P, BW50EAG-3P, BW50SAG-3P, BW50RAG-3P BW63EAG-3P, BW63SAG-3P, BW63RAG-3P BW100AAG-3P, BW100EAG-3P
BW9M1CA-2	BW125JAG-2P
BW9M1CA-3	BW125JAG-3P, BW125SAG-2P, BW125SAG-3P, BW125RAG-2P, BW125RAG-3P, BW50HAG-2P, BW50HAG-3P, BW125HAG-2P, BW125HAG-3P
BW9M1CA-4	BW125JAG-4P, BW125SAG-4P, BW125RAG-4P
BW9M1GA-3	BW160EAG-2P, BW160EAG-3P, BW160JAG-2P, BW160JAG-3P BW160SAG-2P, BW160SAG-3P, BW160RAG-2P, BW160RAG-3P BW250EAG-2P, BW250EAG-3P, BW250JAG-2P, BW250JAG-3P BW250SAG-2P, BW250SAG-3P, BW250RAG-2P, BW250RAG-3P, BW250HAG-2P, BW250HAG-3P
BW9M1GA-4	BW160JAG-4P, BW160SAG-4P, BW160RAG-4P BW250JAG-4P, BW250SAG-4P, BW250RAG-4P
BW9M1HA-3	BW400EAG-2P, BW400EAG-3P, BW400SAG-2P, BW400SAG-3P BW400RAG-2P, BW400RAG-3P, BW400HAG-2P, BW400HAG-3P
BW9M1HA-4	BW400RAG-4P, BW400HAG-4P
BW9M1JA-3	BW630EAG-3P, BW630RAG-3P, BW630HAG-3P BW800EAG-3P, BW800RAG-3P, BW800HAG-3P

Molded Case Circuit Breakers
G-TWIN series External accessories

■ Dimensions, mm

● **32AF to 100AF**

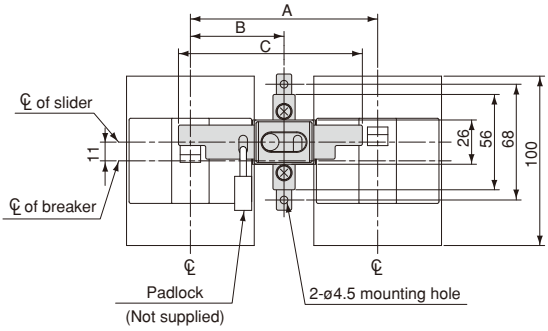

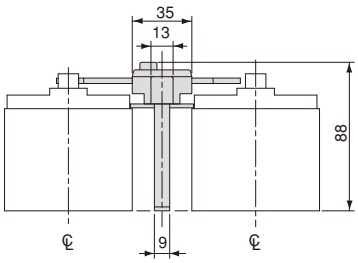

Panel drilling

BZ6M110C2

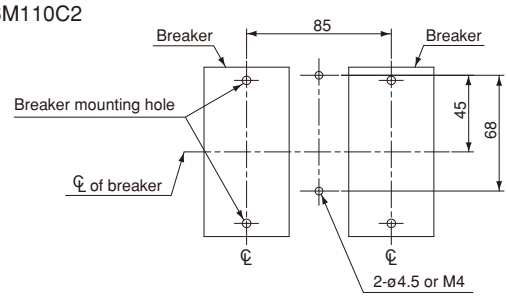

BZ6M110C3

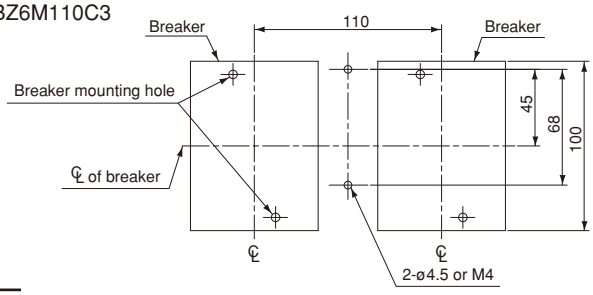

Type	Dimensions, mm A	B	C	Mass (kg)
BZ6M110C2	85	42.5	83	0.11
BZ6M110C3	110	55	108	0.12

Notes: • BZ6M110C2 is not available for padlock.
• Applicable padlock(ø3.5) dimensions, mm
• External installation forms F and R are not applicable to the MCCB on the left of the diagram.

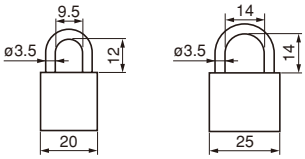

■ Dimensions, mm

● **125AF to 250AF**

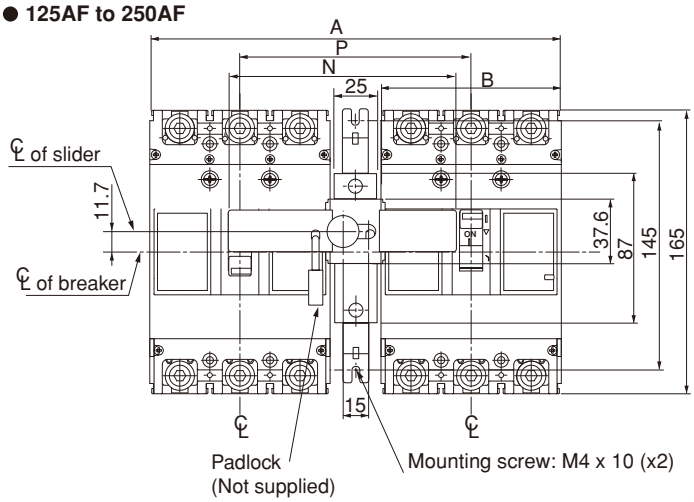

Panel drilling

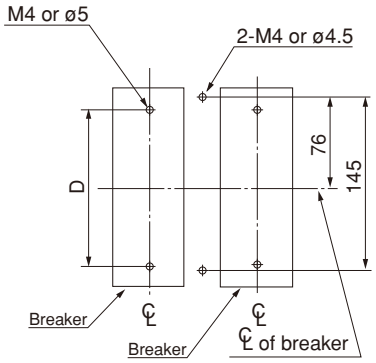

Fig.1

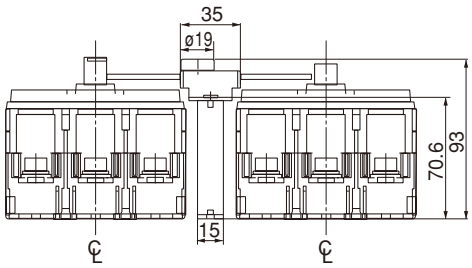

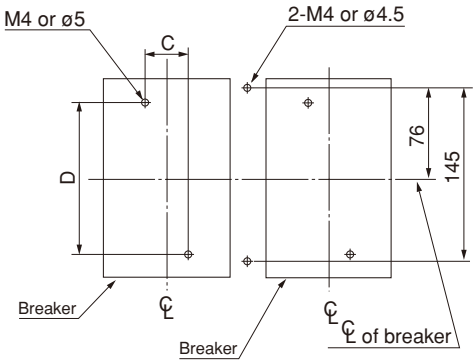

Fig.2

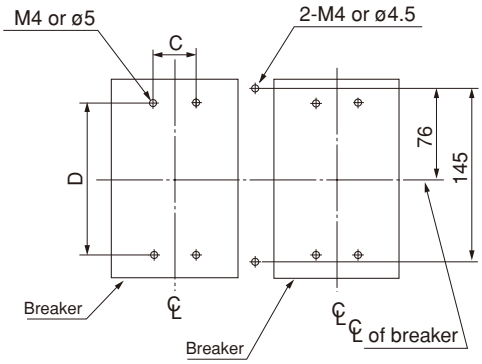

Fig.3

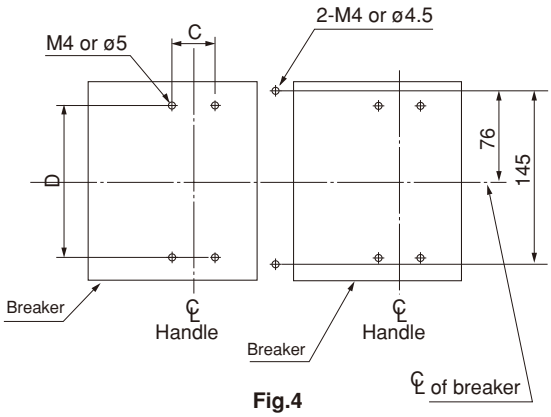

Fig.4

Type	Dimensions, mm						Panel Drilling	Mass(Kg)
	P	N	A	B	C	D		
BW9M1CA-2	90	88	150	60	–	132	Fig.1	
BW9M1CA-3	120	118	210	90	30	132	Fig.2	
BW9M1CA-4	150	148	270	102	30	132	Fig.4	
BW9M1GA-3	135	133	240	105	35	126	Fig.3	
BW9M1GA-4	170	168	310	140	35	126	Fig.4	

Notes: • The dimensions and Breaker mounting holes for back surface mounting are different from those given above. Inquire for details.
• If a padlock is required, use a commercially available padlock with the dimensions shown in the diagram at the right.
• External installation forms F and R are not applicable to the MCCB on the left of the diagram.

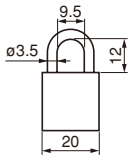

Molded Case Circuit Breakers
G-TWIN series External accessories

■ Dimensions, mm

● **400AF to 800AF**

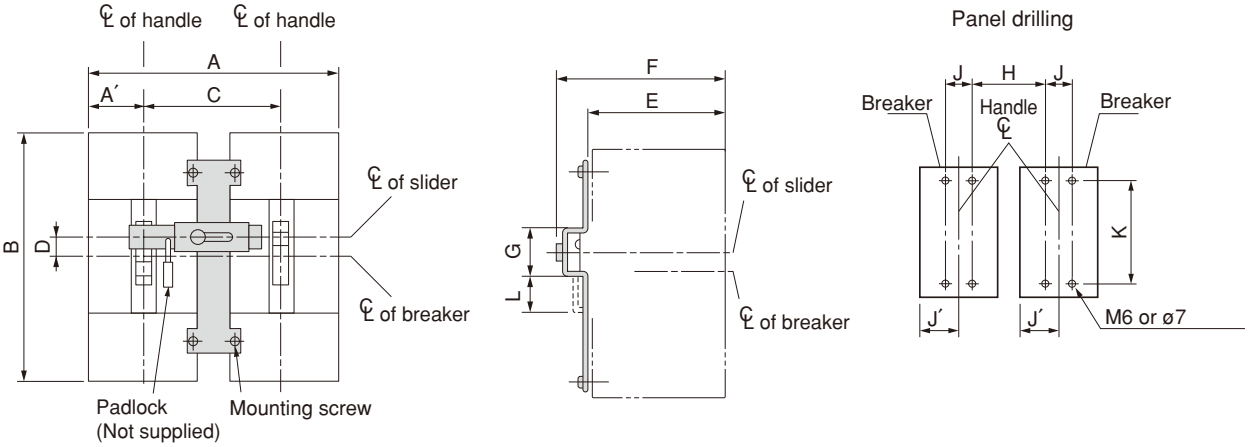

Type	Dimensions, mm											Mass(Kg)
	A (A')	B	C	D	E	F	G	H	J (J')	K	L	
BW9M1HA-3	355 (70)	257	215	20	94.5	132.5	54.5	171	44 (70)	215	38	
BW9M1HA-4	470 (140)	257	260	20	94.5	132.5	54.5	216	44 (140)	215	38	
BW9M1JA-3	500 (105)	275	290	20	94.5	132.5	54.5	220	70 (105)	243	38	

Notes: • The dimensions and Breaker mounting holes for back surface mounting are different from those given above. Inquire for details.
• If a padlock is required, use a commercially available padlock with the dimensions shown in the diagram at the right.
• External installation forms F and R are not applicable to the MCCB on the left of the diagram.

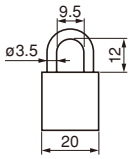

External operating handles

■ Description

Molded case circuit breaker handles are generally directly manual-operated but when mounted in motor control centers or on control panels they are sometimes required to be operated externally. To meet such applications FUJI offers the following three types of handles.

N type handle
This type has a knob handle directly attached to the breaker. It is easily fitted by cutting a hole in the panel, which is provided with a door interlock. They may be fitted to all breakers up to 800 ampere frame sizes.
Conformed to EN60947-1 isolation function.
Available for EN60204-1 power breaking device.
Conformed to UL489 (File No.E93289)

V type handle
The V type handle may be fitted to breakers of up to 800AF.
A separately sold extension shaft provides distance adjustment between the handle and breaker.
Conformed to EN60947-1 isolation function.
Available for EN60204-1 power breaking device.
Conformed to UL489 (File No.E93289)

F type handle
The F type handle may be fitted to breakers of 125 to 400AF.
It is a flange type handle, which is commonly used in the North American market.
The drive section of the breaker and the external operating handle are connected with an optional cable.
Positioning between the breaker and the external operating handle is not required.

Conformed to UL489 (File No.E93289)

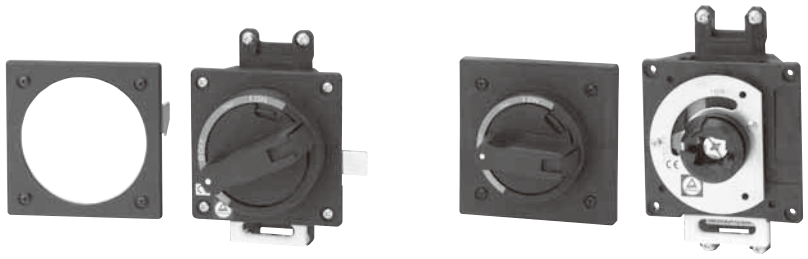

BW9N0CA
N type handles

BW9V0CA
V type handle

N type handles

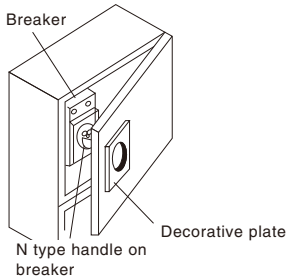

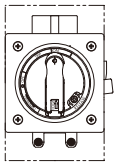

V type handles

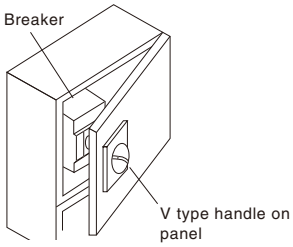

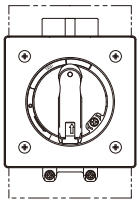

F type handles

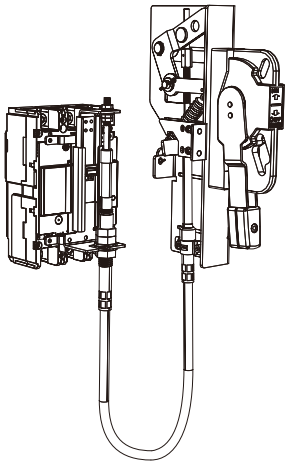

Molded Case Circuit Breakers
G-TWIN series External accessories

N type handles

MCCB	N type handle
BW32	**BZ6N10D**
BW50	
BW63	
BW100	
BW125	**BW9N0CA**
BW160	**BW9N0GA**
BW250	
BW400	**BW9N0HA**
BW630	**BW9N0JA**
BW800	

V type handles

MCCB	V type handle
BW32	**BZ6V10D**
BW50	
BW63	
BW100	
BW125	**BW9V0CA**
BW160	**BW9V0GA**
BW250	
BW400	**BW9V0HA**
BW630	**BW9V0JA**
BW800	

F type handles

MCCB	N type handle
BW125	**BW9F0CA**
BW250	**BW9F0GA**
BW400	**BW9F0HA**

■ Type number nomenclature

● N type handle

BW9N0CA – □

- **Mounting** (For BZ6N10D, BW9N0HA, BW9N0JA)
  - Blank: Front mounting, front connection
  - X: Front mounting, rear connection
  - P: Plug-in mounting
- **Basic type**

● V type handle

BW9V0CA – □

- **Mounting** (For BZ6V10D, BW9V0HA, BW9V0JA)
  - Blank: Front mounting, front connection
  - X: Front mounting, rear connection
  - P: Plug-in mounting
- **Basic type**

Note:
To order a V handle for front-mounting rear connection breakers, add "-X" to the type number; for plug-in mounting breakers, add "-P" to the type number.

● F type handle

BW9F0 □ A

- **Breaker type**
  - C: BW125□U
  - G: BW250□U
  - H: BW400□U
- **Basic type**

Cable (For F type)

BW9FW □ A – □ A

- **Cable length**
  - 15: 1.5m
  - 20: 2.0m
  - 30: 3.0m
- **Breaker type**
  - C: BW125□U
  - G: BW250□U
  - H: BW400□U
- **Basic type**

Terminal cover (For F type)

BW9FBT □ A – L3

- **Breaker type**
  - C: BW125□U
  - G: BW250□U
  - H: BW400□U
- **Basic type**

Fuji Electric FA Components & Systems Co., Ltd.
Information subject to change without notice

■ Dimensions, mm

N type handle

● **BZ6N10D**

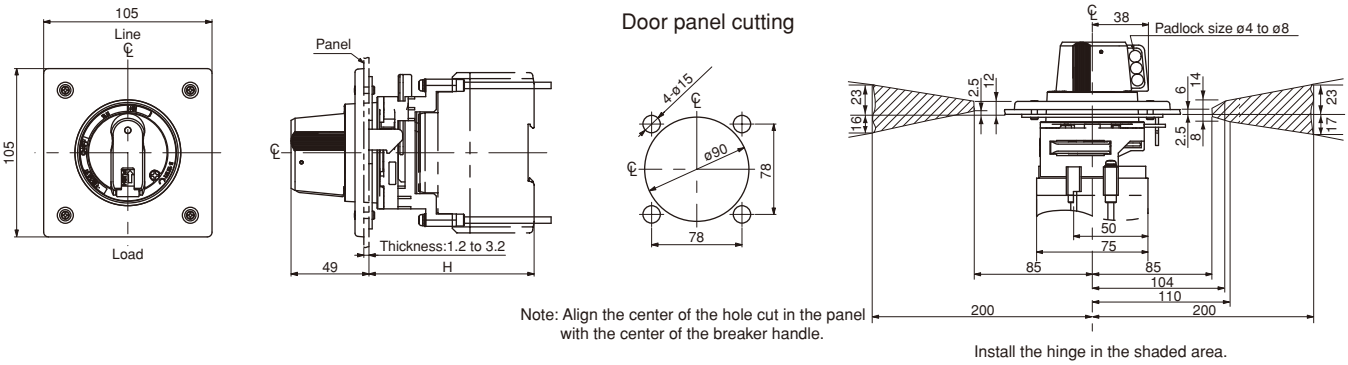

Note: Align the center of the hole cut in the panel with the center of the breaker handle.

MCCB	Handle type	Dust proof packing	Mounting screw	H (mm)	Mass (kg)
BW32	**BZ6N10D**	Provided	M4 x 85	103	0.47
BW50	**BZ6N10D-X**	Provided	Contact FUJI.	111	
BW63	**BZ6N10D-P**			111	
BW100					

● **BW9N0CA, BW9N0GA**

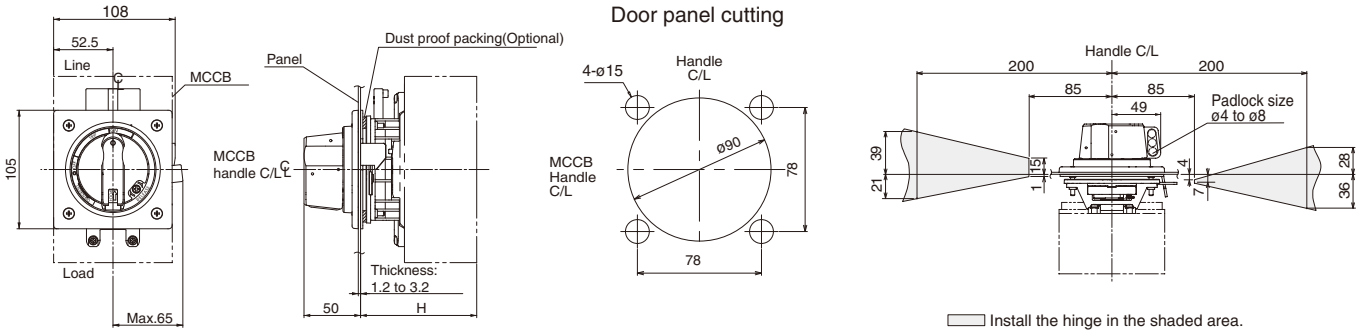

Note: Align the center of the hole cut in the panel with the center of the breaker handle.

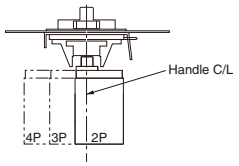

MCCB	Handle type	Dust proof packing	Mounting screw	H (mm)	Mass (kg)
BW125	**BW9N0CA***1	BZ-NP-1C	M4 x 85	103±2	0.56
BW160	**BW9N0GA***2	BZ-NP-1C	M4 x 85	103±2	0.56
BW250					

Notes:
- The handle lock bars do not hold the entire door. Obtain a support bracket for the panel separately.
- Remove the handle lock bar before opening the door. (Turn the handle in the open direction.) The lock bar will be damaged if the door is opened with force while the lock bar is engaged.
- Engage the door interlock securely before turning ON the power.

*1 The Terminal Cover and Handle cannot be attached at the same time for the BW125JAG-2P or BW125RAGU-2P. Select the BW125JAG-3P or BW125RAGU-3P to use a Handle.

*2 The terminal cover will cover the mounting screws for the Breaker. When attaching the terminal cover, a portion of the terminal cover will need to be removed.
Remove portion A in the following diagram.

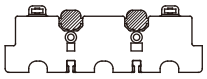

Molded Case Circuit Breakers
G-TWIN series External accessories

● **BW9N0HA, BW9N0JA**

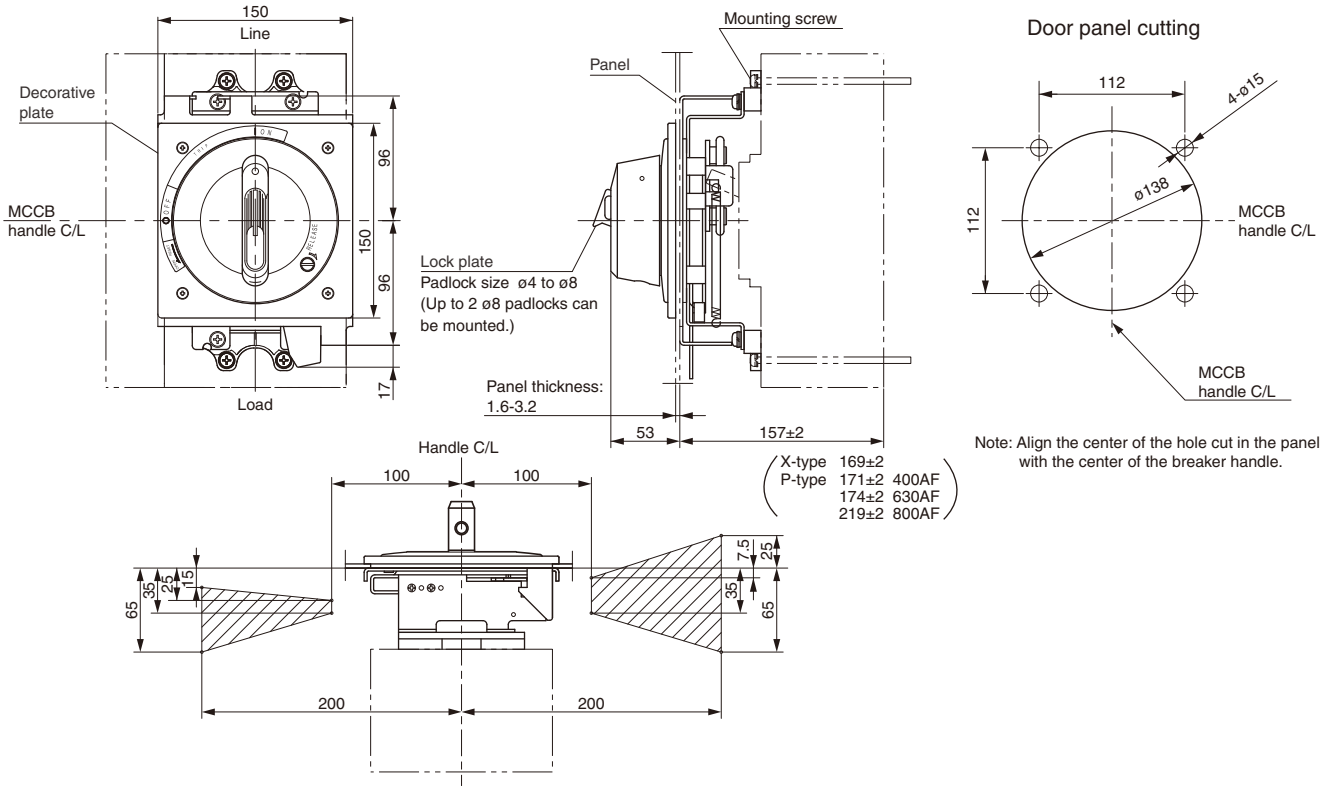

Install the door hinge in the shaded area.

MCCB	Handle type	Dust proof packing	Mounting screw	Mass (kg)
BW400	**BW9N0HA** **BW9N0HA-X** **BW9N0HA-P**	BZ-NP-2	M6 x 110 M6 x 115 Contact FUJI.	1.9
BW630 BW800	**BW9N0JA** **BW9N0JA-X** **BW9N0JA-P**	BZ-NP-2	M6 x 110 M6 x 115 Contact FUJI.	1.9

Notes:
- The handle lock bars do not hold the entire door. Obtain a support bracket for the panel separately.
- Remove the handle lock bar before opening the door. (Turn the handle in the open direction.)
  The lock bar will be damaged if the door is opened with force while the lock bar is engaged.
- Engage the door interlock securely before turning ON the power.
- Not available for side mounting.

■ Dimensions, mm

V type handle

● **BZ6V10D**

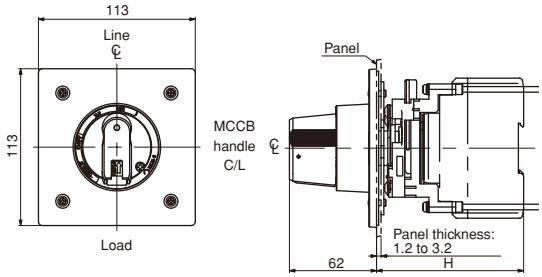

Door panel cutting

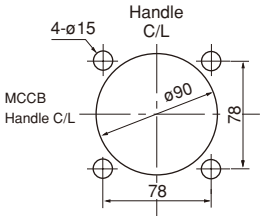

Note: Align the center of the hole cut in the panel with the center of the breaker handle.

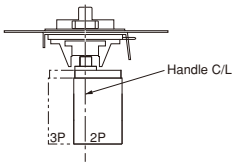

Door hinge installation area

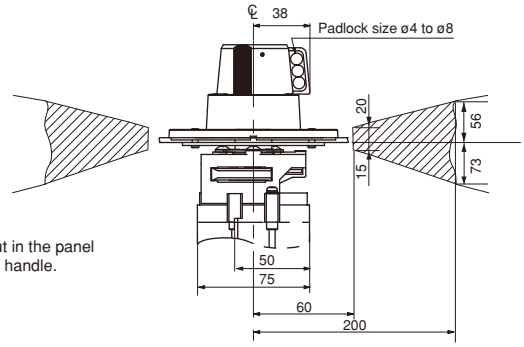

Install the door hinge in the shaded area.

Optional shaft BZ6VS1D
X = H - 105

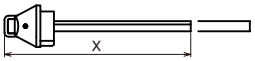

● **BW9V0CA, BW9V0GA**

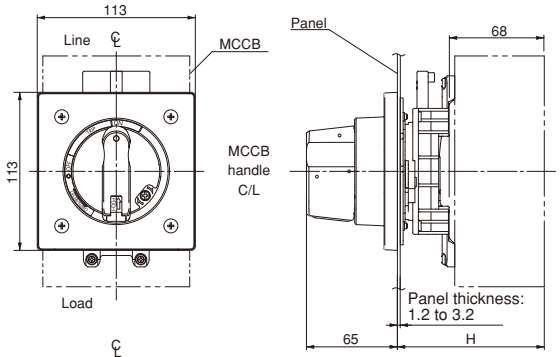

Door panel cutting

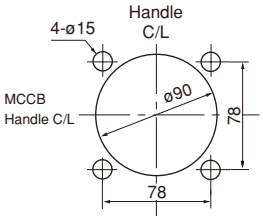

Note: Align the center of the hole cut in the panel with the center of the breaker handle.

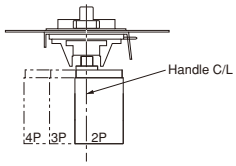

Door hinge installation area

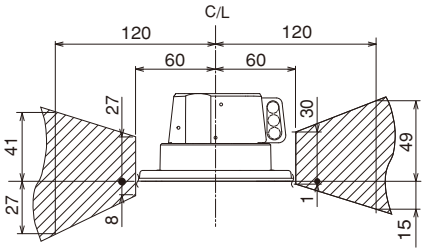

Install the door hinge in the shaded area.

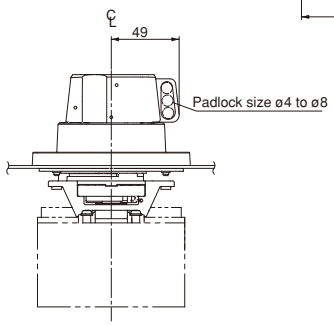

Optional shaft BW9VSG0
X = H - 95

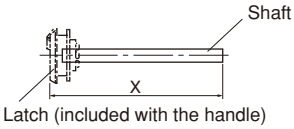

Molded Case Circuit Breakers
G-TWIN series External accessories

MCCB	Handle type	Optional shaft	Standard type H	With the optional shaft (X=154)		Mounting screw	Mass (kg)
				H	Area in which the hinge with H can be installed		
BW32 BW50 BW63 BW100	**BZ6V10D**	BZ6VS1D	105±2	250±2	140 to 250	M4 x 80	0.64
	BZ6V10D-X		113±2	258±2	150 to 258	Contact FUJI.	0.64
	BZ6V10D-P		113±2	258±2	150 to 258	Contact FUJI.	0.64
BW125	**BW9V0CA**	BW9VSG0	105±2	250±2	140 to 250	M4 x 85	0.67
BW160*2 BW250*2	**BW9V0GA**		105±2	250±2	140 to 250	M4 x 85	0.67

Notes:
- The handle lock bars do not hold the entire door. Obtain a support bracket for the panel separately.
- Remove the handle lock bar before opening the door. (Turn the handle in the open direction.)
  The lock bar will be damaged if the door is opened with force while the lock bar is engaged.
- Engage the door interlock securely before turning ON the power.
- Not available for side mounting.

*1 The Terminal Cover and Handle cannot be attached at the same time for the BW125JAG-2P or BW125RAGU-2P. Select the BW125JAG-3P or BW125RAGU-3P to use a Handle.

*2 The terminal cover will cover the mounting screws for the Breaker. When attaching the terminal cover, a portion of the terminal cover will need to be removed. Remove portion A in the following diagram.

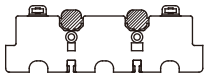

Molded Case Circuit Breakers
G-TWIN series External accessories

● **BW9V0HA, BW9V0JA**

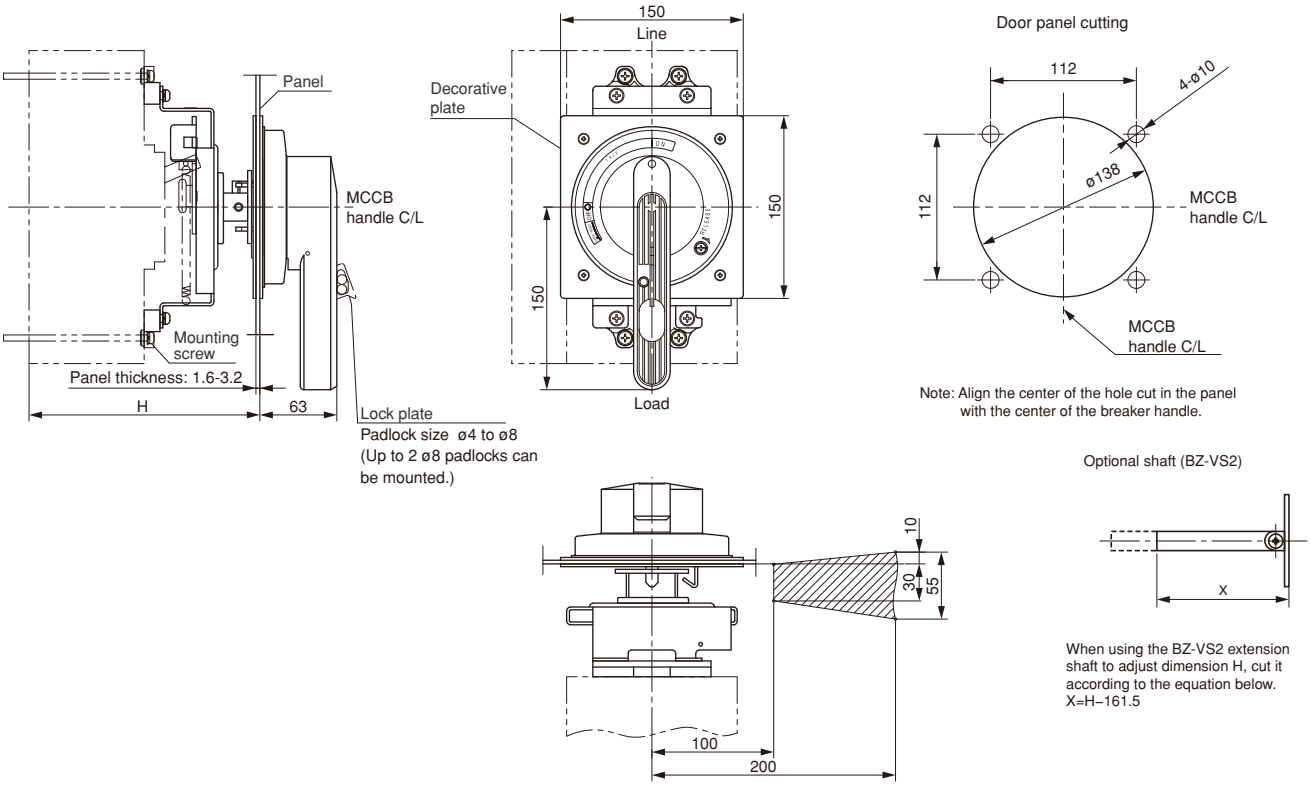

Install the door hinge in the shaded area.

MCCB	Handle type	Optional shaft	Standard type H	With the optional shaft (X=154)		Mass (kg)
				H	Area in which the hinge with H can be installed	
BW400	**BW9V0HA**	BZ-VS2	190±2	250±2	202 to 250	2.2
	BW9V0HA-X		202±2	262±2	214 to 262	
	BW9V0HA-P		204±2	264±2	216 to 264	
BW630	**BW9V0JA**		190±2	250±2	202 to 250	
	BW9V0JA-X		202±2	262±2	214 to 262	
	BW9V0JA-P		207±2	267±2	219 to 269	
BW800	**BW9V0JA**		190±2	250±2	202 to 250	
	BW9V0JA-X		202±2	262±2	214 to 262	
	BW9V0JA-P		252±2	312±2	264 to 312	

Notes:
- The handle lock bars do not hold the entire door. Obtain a support bracket for the panel separately.
- Remove the handle lock bar before opening the door. (Turn the handle in the open direction.)
  The lock bar will be damaged if the door is opened with force while the lock bar is engaged.
- Engage the door interlock securely before turning ON the power.
- Not available for side mounting.

Molded Case Circuit Breakers
G-TWIN series External accessories

■ Dimensions, mm

F type handle

• BW9F0CA

Drive section

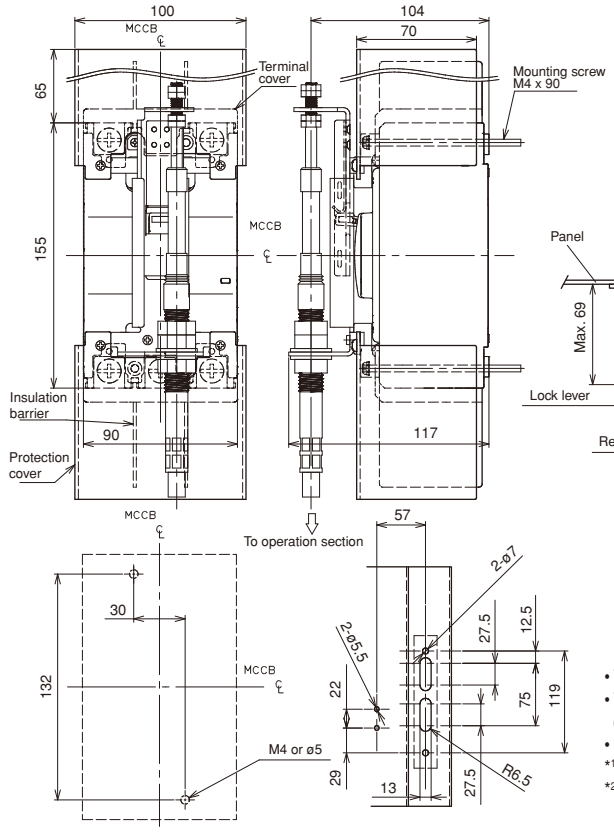

Operation section

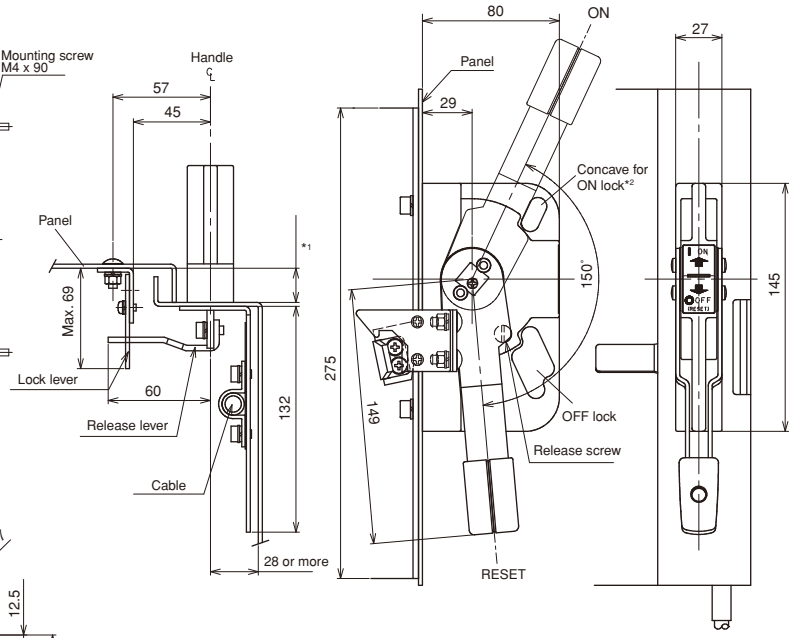

- This product consists of a drive section and an operation section.
- The operation section can be mounted either to the right or to the left on the panel depending on the mounting position of the release lever.
- For the OFF lock, 3 ø10 padlocks can be mounted; for the ON lock, 2 ø10 padlocks.

*1 Set the height to 20 or 30. Adjust the lock lever depending on the setting.
*2 The ON lock can be realized by additionally creating a concave for the ON lock.

Panel drilling

● BW9F0GA

Drive section

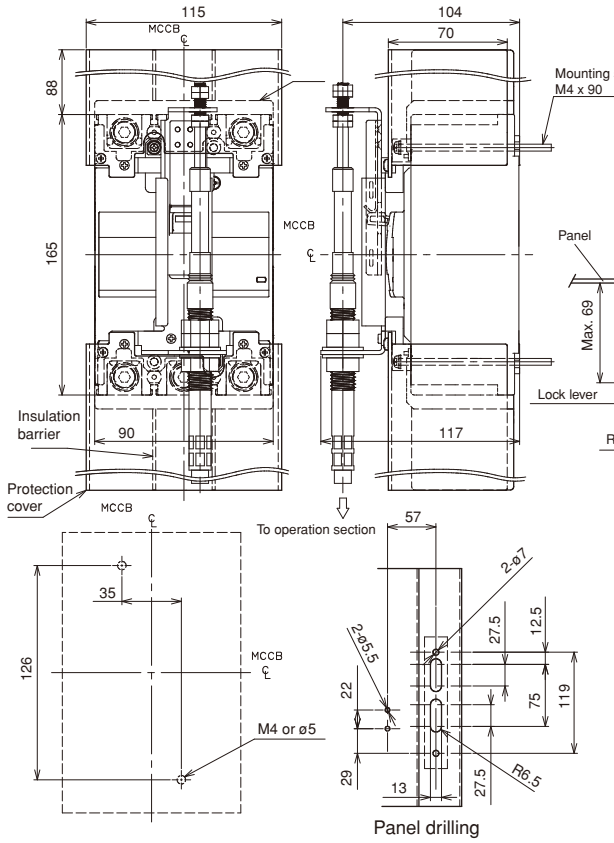

Operation section

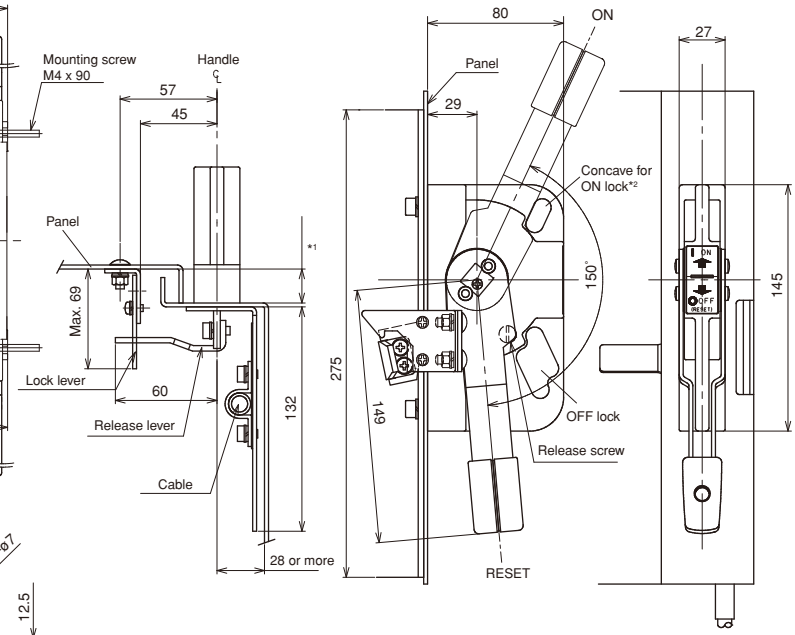

- This product consists of a drive section and an operation section.
- The operation section can be mounted either to the right or to the left on the panel depending on the mounting position of the release lever.
- For the OFF lock, 3 ø10 padlocks can be mounted; for the ON lock, 2 ø10 padlocks.

*1 Set the height to 20 or 30. Adjust the lock lever depending on the setting.
*2 The ON lock can be realized by additionally creating a concave for the ON lock.

Panel drilling

Fuji Electric FA Components & Systems Co., Ltd.
Information subject to change without notice

● **BW9F0HA**

Drive section

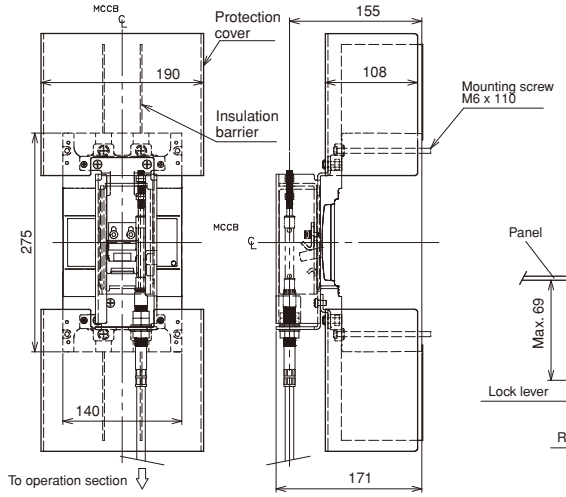

Operation section

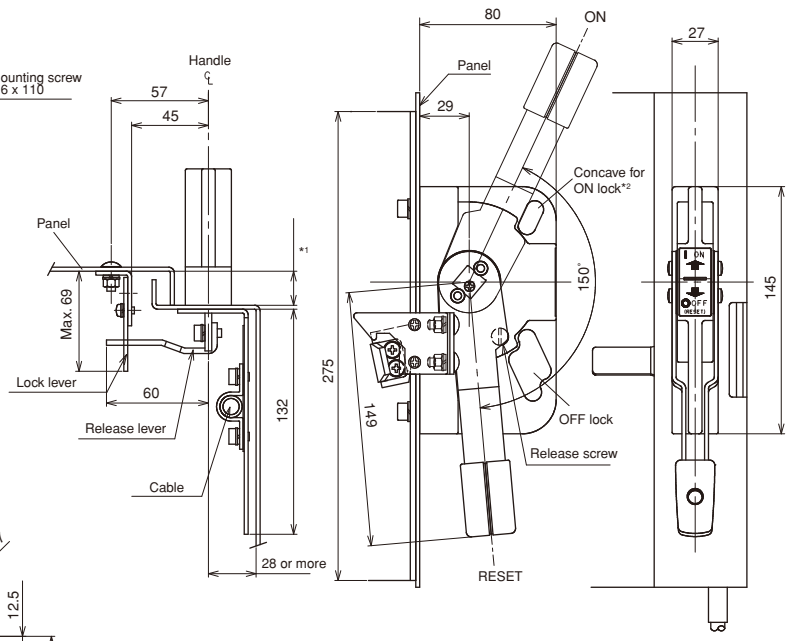

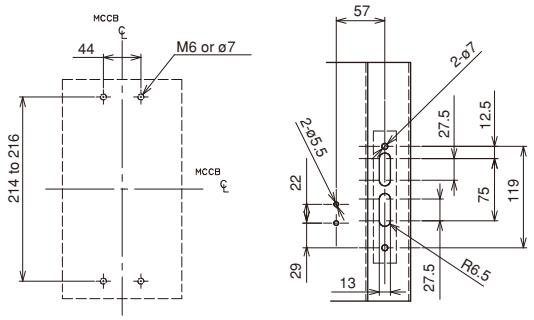

Panel drilling

- This product consists of a drive section and an operation section.
- The operation section can be mounted either to the right or to the left on the panel depending on the mounting position of the release lever.
- For the OFF lock, 3 ø10 padlocks can be mounted; for the ON lock, 2 ø10 padlocks.

*1 Set the height to 20 or 30. Adjust the lock lever depending on the setting.
*2 The ON lock can be realized by additionally creating a concave for the ON lock.

MCCB *	Handle type	Cable		Terminal cover
		Type	Length (m)	
BW125JAGU-3P	**BW9F0CA**	**BW9FWCA-15A**	1.5	**BW9FBTCA-L3**
BW125RAGU-2P		**BW9FWCA-20A**	2.0	
BW125RAGU-3P		**BW9FWCA-30A**	3.0	
BW250EAGU-2P	**BW9F0GA**	**BW9FWGA-15A**	1.5	**BW9FBTGA-L3**
BW250EAGU-3P		**BW9FWGA-20A**	2.0	
BW250JAGU-2P		**BW9FWGA-30A**	3.0	
BW250JAGU-3P				
BW250RAGU-2P				
BW250RAGU-3P				
BW400EAGU-2P	**BW9F0HA**	**BW9FWHA-15A**	1.5	**BW9FBTHA-L3**
BW400EAGU-3P		**BW9FWHA-20A**	2.0	
BW400SAGU-2P		**BW9FWHA-30A**	3.0	
BW400SAGU-3P				
BW400RAGU-2P				
BW400RAGU-3P				
BW400HAGU-2P				
BW400HAGU-3P				

Note: * Not available for BW125JAGU-2P

Molded Case Circuit Breakers
G-TWIN series External accessories

Steel enclosures

■ Description

Steel enclosures are available in three types — two with V-type handle which allows the operation from the outside and other with the operating handle of the breaker extending from it to allow it to be directly switched ON or OFF from outside the enclosure.
Enclosures with V-type handles are provided with a door interlocking mechanism which prevents the door from being opened in the ON condition.
Knockout holes for wiring use are provided as shown in the diagram.

Standard

Dustproof
AF96-175

Rainproof
CP97-2636

■ Type of enclosures

MCCB	Enclosure		
	Standard *1	With V-type handle Dustproof *1*2	Rainproof *1*2
BW32 BW50 BW63	**BZ6C10C2** *3 **BZ6C10C3**	**BW9UVBA-3A** *3	**BW9UWBA-3A** *3
BW100	**BZ6C25C2** *3 **BZ6C25C3** *3	**BW9UVBA-3B** *3	**BW9UWBA-3B** *3
BW125	**BW9UCCA-2** **BW9UCCA-3**	**BW9UVCA-3**	**BW9UWCA-3**
BW250	**BW9UCGA-3**	**BW9UVGA-3**	**BW9UWGA-3**
BW400	**BZ-C60B**	**BW9UVHA-3**	**BW9UWHA-3**
BW630 BW800	**BZ-C70B**	**BW9UVJA-3**	–

*1 No models are available for four-pole products.
*2 The appearance of dust-proof and rain-proof models differs from the photograph (400A frames and higher).
*3 Combination with external accessories(R) is not possible.

■ Ordering information

Specify the following:
1. Type number of enclosures

Fuji Electric FA Components & Systems Co., Ltd.
Information subject to change without notice

■ Dimensions, mm

Fig.1 Standard

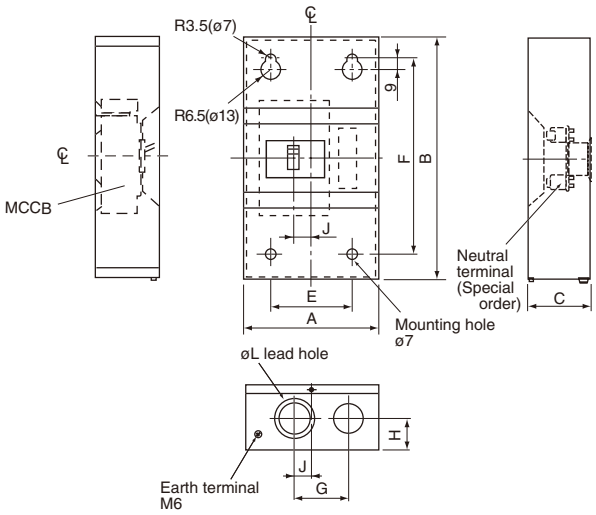

Fig.2 With V type handle
BW9UVBA-3A, BW9UVBA-3B
BW9UVCA-3, BW9UVGA-3

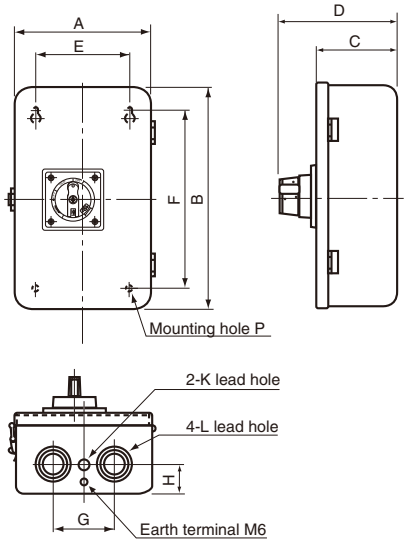

Fig3. With V type handle
BW9UVHA-3, BW9UVJA-3

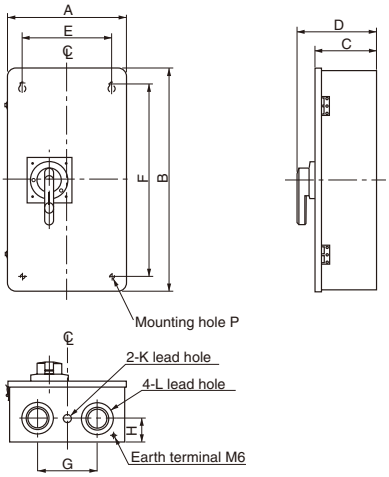

■ Connection method diagrams

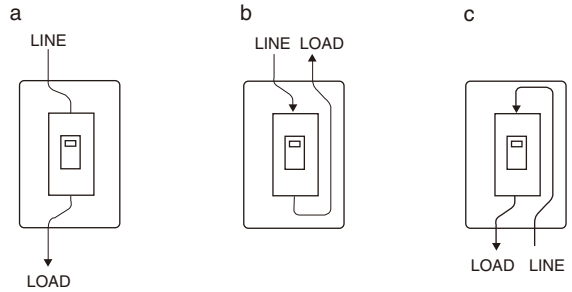

Type	Connection	Fig.	A	B	C	D	E	F	G	H	J	K	L	P
BZ6C10C2	a, b, c	1	135	225	95	–	90	170	65	40	25	–	ø35, ø22	–
BZ6C10C3														
BZ6C25C2			200	320	95	–	120	240	80	40	25	–	ø45, ø30	–
BZ6C25C3														
BW9UCCA-2			200	320	103	–	120	240	80	40	25	–	ø45, ø30	–
BW9UCCA-3														
BW9UCGA-3				360				280		45			ø55, ø40	
BZ-C60B			400	750	175	–	300	650	200	80	100	–	ø106, ø78, ø63	–
BZ-C70B														
BW9UVBA-3A		2	180	300	114	178.5	100	220	70	40	–	–	ø28, ø35, ø43	ø7
BW9UVBA-3B			250	400	142	206.5	170	320	110	50	–	ø23	ø35, ø52, ø63	ø9
BW9UVCA-3						207								
BW9UVGA-3														
BW9UVHA-3		3	400	750	206	269	300	650	200	80	–	ø28	ø63, ø78, ø106	ø12
BW9UVJA-3														

Molded Case Circuit Breakers
G-TWIN series External accessories

Terminal covers

■ Description

These terminal covers are used as guards to prevent accidental touch with live line terminations.
These terminal covers can be fitted to either line or load side.

● Up to 400AF
Short type: BW9BT □ A-S □
- Snap-on fitting

Long type: BW9BT □ A-L □
- Crimp connection use

● 630, 800AF
Long type: BW9BTJA-L □
- Transparent

Short type

Long type

B1

Long type

Type		No. of poles	MCCB	Dimensions (mm)			Packing quantity	Appearance
Transparent	Gray			A	B	C		
BW9BTAA-L2	**BW9BTAA-L2W**	2	BW32□-2P, BW50□-2P BW63□-2P, BW100□-2P	50	40	53	2	• Preventing exposure of live section when amplifier's terminals are connected • Snap-on mounting
BW9BTAA-L3	**BW9BTAA-L3W**	2, 3	BW32□-3P, BW50□-3P BW63□-3P, BW100□-3P	75	40	53	2	
BW9BTCA-L2	**BW9BTCA-L2W**	2	BW125JAG-2P	60	40	66.5	2	
BW9BTCA-L3	**BW9BTCA-L3W**	2, 3	BW50HAG-2P, BW50HAG-3P BW125RAG-2P, BW125HAG-2P BW125□-3P	90	40	66.5	2	
BW9BTCA-C3	–	2, 3	BW125RAG-2P, BW125□-3P	90	60	66.5	2	
BW9BTCA-L4	**BW9BTCA-L4W**	4	BW125JAG-4P, BW125RAG-4P	120	40	66.5	2	
BW9BTGA-L3 *1	**BW9BTGA-L3W** *1	2, 3	BW160□-2P, BW160□-3P	105	50	66.5	2	
BW9BTGA-L4 *1	**BW9BTGA-L4W** *1	4	BW160□-4P	140	50	66.5	2	
BW9BTGA-C3	–	2, 3	BW250□-2P, BW250□-3P	105	75	66.5	2	
BW9BTGA-L3 *1	**BW9BTGA-L3W** *1	2, 3	BW250□-2P, BW250□-3P	105	50	66.5	2	
BW9BTGA-L4 *1	**BW9BTGA-L4W** *1	4	BW250□-4P	140	50	66.5	2	
BW9BTHA-L3 *2	**BW9BTHA-L3W** *1	2, 3	BW400□-2P, BW400□-3P	172	110	98	2	
BW9BTHA-L4 *2	–	4	BW400□-4P	220	110	98	2	
BW9BTJA-L3	**BW9BTJA-L3W**	3	BW630□-3P, BW800□-3P	230	135	97.5	2	
BW9BTJA-L4	**BW9BTJA-L4W**	4	BW630□-4P, BW800□-4P	280	155	98	2	

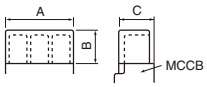

Short type

Type		No. of poles	MCCB	Dimensions (mm)			Packing quantity	Appearance
Transparent	Gray			A	B	C		
BW9BTAA-S2	**BW9BTAA-S2W**	2	BW32□-2P, BW50□-2P BW63□-2P, BW100□-2P	50	10	53	2	• Preventing exposure of live section when amplifier's terminals are connected • Snap-on mounting
BW9BTAA-S3	**BW9BTAA-S3W**	2, 3	BW32□-3P, BW50□-3P BW63□-3P, BW100□-3P	75	10	53	2	
BW9BTCA-S2	**BW9BTCA-S2W**	2	BW125JAG-2P	60	8	66.5	2	
BW9BTCA-S3	**BW9BTCA-S3W**	2, 3	BW50HAG-2P, BW50HAG-3P BW125RAG-2P, BW125HAG-2P BW125□-3P	90	8	66.5	2	
BW9BTCA-S4	**BW9BTCA-S4W**	4	BW125JAG-4P, BW125RAG-4P	120	8	66.5	2	
BW9BTGA-S3 *1	**BW9BTGA-S3W** *1	2, 3	BW160□-2P BW160□-3P BW250□-2P BW250□-3P	105	8	66.5	2	
BW9BTGA-S4 *1	**BW9BTGA-S4W** *1	4	BW160□-4P BW250□-4P	140	8	66.5	2	
BW9BTHA-S3 *3	**BW9BTHA-S3W** *2	2, 3	BW400□-2P BW400□-3P	140	65	98	2	
BW9BTHA-S4 *3	**BW9BTHA-S4W** *2	4	BW400□-4P	185	65	98	2	

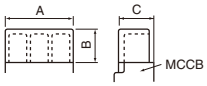

Notes: • A gray-white terminal cover comes standard with the Global Series 125AF and 250AF.
*1 When using the external operating handle, part of the terminal cover (▨) must be cut away.
*2 Crimp terminals for 325 mm^2 are not available.
*3 This type of cover can be mounted on the 400AF when flat terminals are not used.

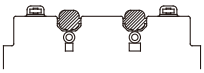

Insulation barriers

■ Description

The interphase barriers are provided on frame size of 32AF to 800AF breakers for front mounting. The barriers are installed in the molded slots between terminals.
The earth barrier is used to increase the insulation with the mounting plate surface when two crimp terminals are wired.
Installation of these barriers after wiring is possible even when an external accessory is installed.

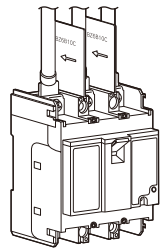

Interphase barrier

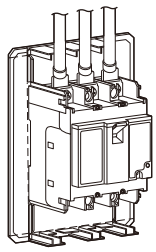

Earth barrier

Interphase barrier

MCCB	Interphase barrier				
	Type	Dimensions (mm)		Packing quantity	Mass (g)
		A	B		
BW32 BW50AAG, EAG BW50SAG, RAG BW63 BW100	**BZ6B10C**	50	49	4	23
BW50HAG, BW125	**BW9BPCA**	50	60	2	15
BW160 BW250	**BW9BPGA**	80	60	2	25
BW400 BW630 BW800	**B-43A**	105	95	4	130

Interphase barrier

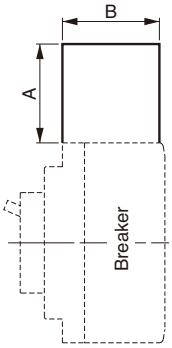

Earth barrier

MCCB	Earth barrier				
	Type	Dimensions (mm)		Packing quantity	Mass (g)
		A	B		
BW32□-2P BW50□-2P BW63□-2P BW100□-2P	**BZ6BL10C2**	100 (50, 75)*1	43 (30)*1	1	33
BW32□-3P BW50□-3P BW63□-3P BW100□-3P	**BZ6BL10C3**	125 (75, 100)*1	43 (30)*1	1	41

Note: *1 Can be cut to dimensions

Earth barrier

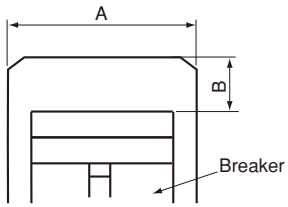

Molded Case Circuit Breakers
G-TWIN series External accessories

Padlocking device and handle locking cover

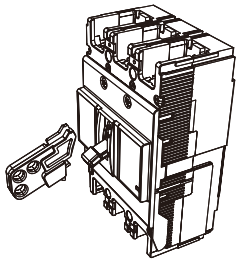

Padlocking device
• Cap type Q1,QN

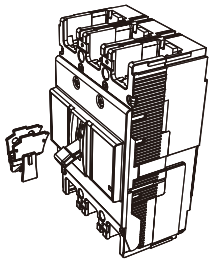

Handle locking cover

■ Description

● Padlocking device

These padlocking device lock the Breaker handle in the OFF position. Use a commercially available padlock with a shackle diameter of 3.5 to 5mm (5mm for the BZ6L10CA).

● Handle locking covers (Order Separately)

These simple handle locking covers can be easily installed by the user.
Tripping is possible while the Breaker is locked ON.

MCCB	Padlocking device			Handle locking cover
	Q1: Cap type	QN: Scissors type	Q2: Plate type	
BW32	**BZ6L10CA**	–	▲ *1*4	**BZ6L10C**
BW50AAG, EAG, SAG, RAG				
BW63				
BW100				
BW50HAG, BW125	**BW9Q1CA** *5		**BW9Q2CA** *3	**BW9L1CA**
BW160			**BW9Q2GA**	
BW250				
BW400	▲ *1	**BW9QNHA** *2	**BW9Q2HA**	**BW9L1HA**
BW630			**BW9Q2JA**	
BW800				

Notes:
*1 Specify Locks when ordering the Breaker. (▲: Factory-mounted)
*2 ON and OFF locking is possible.
*3 Not applicable to the BW125JA□-2P (models with a width of 60 mm).
*4 If a padlock is required, use a commercially available padlock with the dimensions shown in the diagram at the right.
*5 Three padlocks with shackles from 3.5 to 8 mm in diameter can be attached.

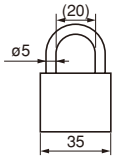

Padlocking device
• Cap type Q1

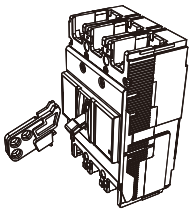

• Plate type Q2

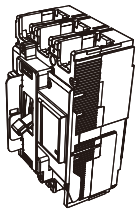

Handle locking cover

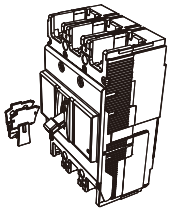

Q1: BZ6L10CA (OFF-locking Padlocking device)

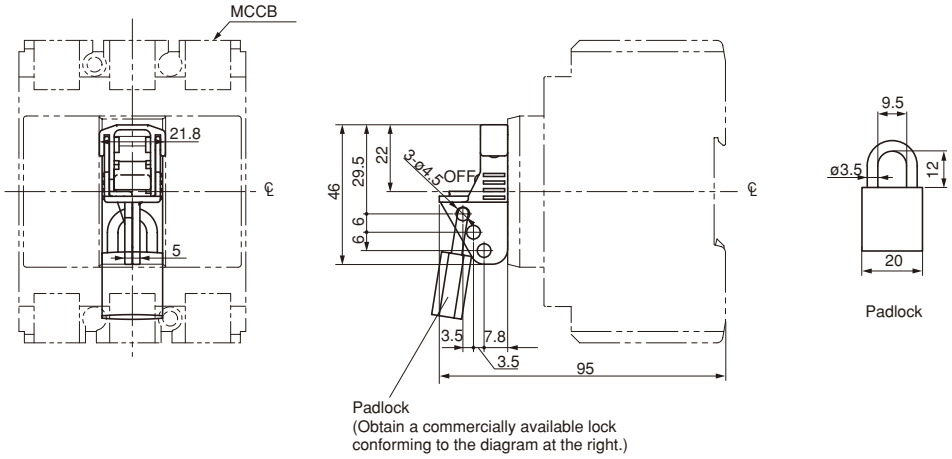

Fuji Electric FA Components & Systems Co., Ltd.
Information subject to change without notice

■ G-TWIN Standard Series (IEC/EN/GB/JIS conformed)

Line protection

• 2-pole

AC230V (Icu)	EW32	EW50	EW100
2.5kA	AAG-2P	AAG-2P	
10kA			EAG-2P

• 3-pole

AC415V (Icu)	EW32	EW50	EW63	EW100	EW125	EW160	EW250	EW400	EW630	EW800
1.5kA	EAG-3P									
2.5kA	SAG-3P	EAG-3P	EAG-3P							
7.5kA		SAG-3P	SAG-3P							
10kA		RAG-3P	RAG-3P	EAG-3P						
18kA						EAG-3P	EAG-3P			
30kA					JAG-3P	JAG-3P	JAG-3P	EAG-3P		
36kA					SAG-3P	SAG-3P	SAG-3P	SAG-3P	EAG-3P	EAG-3P
50kA					RAG-3P	RAG-3P	RAG-3P	RAG-3P	RAG-3P	RAG-3P
70kA								HAG-3P	HAG-3P	HAG-3P

• 4-pole

AC415V (Icu)	EW125	EW160	EW250	EW400
30kA	JAG-4P	JAG-4P	JAG-4P	
36kA	SAG-4P	SAG-4P	SAG-4P	
50kA	RAG-4P	RAG-4P	RAG-4P	RAG-4P
70kA				HAG-4P

Motor protection

• 3-pole

AC415V (Icu)	EW32	EW50	EW63	EW100	EW125	EW250
1.5kA	EAM-3P					
2.5kA	SAM-3P	EAM-3P	EAM-3P			
7.5kA		SAM-3P	SAM-3P			
10kA				EAM-3P		
18kA						EAM-3P
30kA					JAM-3P	JAM-3P
50kA					RAM-3P	RAM-3P

■ G-TWIN Global Series (IEC/EN/GB/JIS/UL/CSA conformed)

Line protection

• 2-pole

AC230V (Icu)	EW100
10kA	EAGU-2P

• 3-pole

AC415V (Icu)	EW50	EW100	EW125	EW250	EW400	EW630
10kA	RAGU-3P	EAGU-3P				
30kA			JAGU-3P	JAGU-3P		
36kA					SAGU-3P	
50kA			RAGU-3P	RAGU-3P	RAGU-3P	RAGU-3P
70kA					HAGU-3P	

Earth Leakage Circuit Breakers
G-TWIN series Type number nomenclature

■ Type number nomenclature

EW 250 EA G □ - 3P 225 B X

Series
EW: G-TWIN series ELCB

Frame size

32: 32AF	63: 63AF	125: 125AF	250: 250AF	630: 630AF
50: 50AF	100: 100AF	160: 160AF	400: 400AF	800: 800AF

Breaking capacity

Rated breaking capacity Icu (440V AC) *(at 230V AC)

	32AF	50AF	63AF	100AF	125AF	160AF	250AF	400AF	630AF	800AF
AA	2.5kA*	2.5kA*	–	5kA*	–	–	–	–	–	–
EA	1.5kA	2.5kA	2.5kA	10kA	–	18kA	18kA	30kA	36kA	36kA
JA	–	–	–	–	30kA	30kA	30kA	–	–	–
SA	2.5kA	7.5kA	7.5kA	–	36kA	36kA	36kA	36kA	–	–
RA	–	10kA	10kA	–	50kA	50kA	50kA	50kA	50kA	50kA
HA	–	–	–	–	–	–	–	70kA	70kA	70kA

Model
G: Line protection M: Motor protection

G-TWIN series
Blank: Standard U: Global

No. of poles
2P: 2-pole 3P: 3-pole 4P: 4-pole

Rated current
See page B1-121.

Rated sensitive current
A: 15mA J: 100/300/500/1000mA
B: 30mA K: 100/200mA
C: 100mA 100/200/500mA
D: 50mA 100/200/500/1000mA

Terminal combination (Global type)

Code	Terminal position Line	Terminal position Load	Applicable breaker type EW50, 100	EW125, 250	EW400, 630
Blank	Screw	Screw	●	●	–
Blank	Flat teminal	Flat teminal	–	–	●
SB	Block terminal	Block terminal	–	●	●
SF	Flat teminal	Flat teminal	●	●	–
S3	Screw	Flat terminal	●	●	–
S4	Flat teminal	Screw	●	●	–
S5	Screw	Block terminal	–	●	–
S6	Block terminal	Screw	–	●	–
S7	Flat teminal	Block terminal	–	●	●
S8	Block terminal	Flat terminal	–	●	●

Mounting and connection
• Standard type
Blank: Front mounting, front connection
X: Front mounting, rear connection
E: Flush mounting, rear connection
Y: Flush mounting, top & bottom connection
P: Plug-in mounting

Fuji Electric FA Components & Systems Co., Ltd.
Information subject to change without notice

Earth Leakage Circuit Breakers
G-TWIN series Type number nomenclature

W K F□ R□ A Q2 M□ UC

Enclosure
UC: Standard
UV: Dust-proof
UW: Rain-proof

With motor operating device (32 - 100AF)
□: DC100V
AC100-110V
AC200-220V

Pad locking device
Q2: Plate type

Connection method (internal accessories)
Blank: Lead-wire system
A: Terminal block system

Undervoltage trip device (External)*
• 32/50/63/100AF
□: DC24V
: DC100-110V
: AC100V (50Hz) / AC100-110V (60Hz)
: AC200V (50Hz) / AC200-220V (60Hz)
: AC400V (50Hz) / AC400-440V (60Hz)

Undervoltage trip device (Internal)*

• 125/160/250AF	• 400/630/800AF
□: DC24V	: AC/DC24V
: DC48V	: AC/DC48V
: DC100-110V	: AC/DC100-110V
: DC125V / AC100-110V	: AC120-130V / DC125V
: AC110-130V	: AC200-240V / DC200-220V
: AC200-240V	: AC277V
: AC277V	: AC380-480V
: AC380-415V	

Shunt trip device (External)*
• 32/50/63/100AF
□: DC24V
: DC100-110V
: AC100 (50Hz) / AC100-110V (60Hz)
: AC200 (50Hz) / AC200-220V (60Hz)
: AC400 (50Hz) / AC400-440V (60Hz)

Shunt trip device (Internal)*

• 125/160/250AF	• 400/630/800AF
□: AC/DC24V	: AC/DC24-48V
: AC/DC48V	: AC100-240V / DC100-220V
: AC100-120V / DC100-110V	: AC277V
: AC120-130V	: AC380-550V
: AC200-240V / DC200-220V	
: AC277V	
: AC380-440V	
: AC440-480V	
: AC500-550V	

Alarm switch*
K: Standard SPDT
J: Standard 2PDT
8: For low level circuit SPDT
9: For low level circuit 2PDT

Auxiliary switch*
W: Standard SPDT
V: Standard 2PDT
1: For low level circuit SPDT
2: For low level circuit 2PDT

* For the available configuration of accessory, see page B1-154.

Earth Leakage Circuit Breakers
G-TWIN series Quick reference guide

■ G-TWIN Standard Series

Ampere frame				32A			
Type				**EW32AAG**		**EW32EAG**	**EW32SAG**
Pole				2	3	3	3
Rated current Reference amb. temp. (40°C)		In(A)		5, 10, 15, 20, 30, 32	5, 10, 15, 20, 30, 32	5, 10, 15, 20, 30, 32	3, 5, 10, 15, 20, 30, 32
Rated impulse withstand voltage		Uimp(kV)		2.5	4	4	4
Isolation compliant				●	●	●	●
Rated voltage Ue (AC V)				100-230	100-230	100-230-440	100-230-440
Rated sensitive current (mA)				15, 30, 100	15, 30, 100	15, 30, 100	30, 100/200/500 changeover
Tripping time (s)				0.1 or less	0.1 or less	0.1 or less	0.1 or less
Rated breaking capacity Icu/Ics (kA)	IEC 60947-2 EN 60947-2 JIS C 8201-2-2	AC	440V	–	–	1.5/1	2.5/2
			415V	–	–	1.5/1	2.5/2
			400V	–	–	1.5/1	2.5/2
			380V	–	–	1.5/1	2.5/2
			230V	2.5/2	2.5/2	2.5/2	5/3
			200V	2.5/2	2.5/2	2.5/2	5/3
			100V	2.5/2	5/3	5/3	5/3
	GB14048.2	AC	400V	–	–	1.5/1	2.5/2
			230V	2.5/2	2.5/2	2.5/2	5/3
Conforming to standards	CE Marking			● (TÜV)	● (TÜV)	● (TÜV)	● (TÜV)
	CCC certificate			●	●	●	●
	Electrical Appliance and Material Safety Law *1			●	●	●	●
Dimensions (mm) 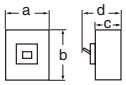			a	50	75	75	75
			b	100		100	100
			c	60		60	60
			d	84		84	84
Mass (kg)				0.4	0.5	0.5	0.6
Tripping device				Hydraulic-magnetic			
Front mounting, front connection			No-mark	○	○	○	○
Front mounting, rear connection			X	○	○	○	○
Flush mounting, front connection			E	○	○	○	○
Flush mounting, top & bottom connection			Y	○	○	○	○
Plug-in mounting			P	○	○	○	○
IEC 35mm wide rail mounting			No-mark	○	○	○	○
Internal accessories			Page B1-149				
Alarm switch			K	○	○	○	○
Auxiliary switch			W	○	○	○	○
Undervoltage trip			R	○	○	○	○
Shunt trip			F	○	○	○	○
Earth alarm switch			L	–	–	–	–
External accessories			Page B1-152				
Handle padlocking device	Cap type		Q1	○	○	○	○
Handle padlocking device	Plate type		Q2	▲	▲	▲	▲
Operating handle	N-type		N	○	○	○	○
Operating handle	V-type		V	○	○	○	○
Terminal cover	Short		BT□S	○	○	○	○
Terminal cover	Long		BT□L	○	○	○	○
Insulation barrier	Interphase		BP	○	○	○	○
	Earth		BL	○	○	○	○
Handle locking cover			L1	○	○	○	○
Flat terminal			SS	○	○	○	○
Block terminal			SL	–	–	–	–

●: Approved ○: Available –: Not available ▲ : Factory-mounted accessory
Note: *1 Electrical Appliance and Material Safety Law of Japan

Rated voltage (V)	Operational voltage range (V)
100–230	80–264
100–230–440	80–484

■ G-TWIN Standard Series

Ampere frame				50A			
Type				**EW50AAG**	**EW50EAG**	**EW50SAG**	**EW50RAG**
Pole				2 / 3	3	3	3
Rated current Reference amb. temp. (40°C)		In(A)		5, 10, 15, 20, 30, 32, 40, 50	5, 10, 15, 20, 30, 32, 40, 50	5, 10, 15, 20, 30, 32, 40, 50	10, 15, 20, 30, 32, 40, 50
Rated impulse withstand voltage		Uimp(kV)		2.5 / 4	6	6	6
Isolation compliant				●	●	●	●
Rated voltage Ue (AC V)				100-230	100-230-440	100-230-440	100-230-440
Rated sensitive current (mA)				15, 30, 100	15, 30, 100/200 changeover	30, 100/200/500 changeover	30, 100/200/500 changeover
Tripping time (s)				0.1 or less	0.1 or less	0.1 or less	0.1 or less
Rated breaking capacity Icu/Ics (kA)	IEC 60947-2 EN 60947-2 JIS C 8201-2-2	AC	440V	–	2.5/2	7.5/4	10/5
			415V	–	2.5/2	7.5/4	10/5
			400V	–	2.5/2	7.5/4	10/5
			380V	–	2.5/2	7.5/4	10/5
			230V	2.5/2	5/3	10/5	25/13
			200V	2.5/2	5/3	10/5	25/13
			100V	2.5/2 / 5/3	5/3	10/5	25/13
	GB14048.2	AC	400V	–	2.5/2	7.5/4	10/5
			230V	2.5/2	5/3	10/5	25/13
Conforming to standards	CE Marking			● (TÜV)	● (TÜV)	● (TÜV)	● (TÜV)
	CCC certificate			●	●	●	●
	Electrical Appliance and Material Safety Law *1			●	●	●	●
Dimensions (mm)			a	50 / 75	75	75	75
			b	100	100	100	100
			c	60	60	60	60
			d	84	84	84	84
Mass (kg)				0.4 / 0.6	0.6	0.6	0.6
Tripping device				Hydraulic-magnetic			
Front mounting, front connection			No-mark	○	○	○	○
Front mounting, rear connection			X	○	○	○	○
Flush mounting, front connection			E	○	○	○	○
Flush mounting, top & bottom connection			Y	○	○	○	○
Plug-in mounting			P	○	○	○	○
IEC 35mm wide rail mounting			No-mark	○	○	○	○
Internal accessories			Page B1-149				
Alarm switch			K	○	○	○	○
Auxiliary switch			W	○	○	○	○
Undervoltage trip			R	○	○	○	○
Shunt trip			F	○	○	○	○
Earth alarm switch			L	–	–	–	–
External accessories			Page B1-152				
Handle padlocking device	Cap type		Q1	○	○	○	○
Handle padlocking device	Plate type		Q2	▲	▲	▲	▲
Operating handle	N-type		N	○	○	○	○
Operating handle	V-type		V	○	○	○	○
Terminal cover	Short		BT□S	○	○	○	○
Terminal cover	Long		BT□L	○	○	○	○
Insulation barrier	Interphase		BP	○	○	○	○
	Earth		BL	○	○	○	○
Handle locking cover			L1	○	○	○	○
Flat terminal			SS	○	○	○	○
Block terminal			SL	–	–	–	–

●: Approved ○: Available –: Not available ▲ : Factory-mounted accessory
Note: *1 Electrical Appliance and Material Safety Law of Japan

Rated voltage (V)	Operational voltage range (V)
100–230	80–264
100–230–440	80–484

Earth Leakage Circuit Breakers
G-TWIN series Quick reference guide

■ G-TWIN Standard Series

Ampere frame				63A		
Type				**EW63EAG**	**EW63SAG**	**EW63RAG**
Pole				3	3	3
Rated current Reference amb. temp. (40°C)		In(A)		60, 63	60, 63	60, 63
Rated impulse withstand voltage		Uimp(kV)		6	6	6
Isolation compliant				●	●	●
Rated voltage Ue (AC V)				100-230-440	100-230-440	100-230-440
Rated sensitive current (mA)				15, 30, 100/200 changeover	30, 100/200/500 changeover	30, 100/200/500 changeover
Tripping time (s)				0.1 or less	0.1 or less	0.1 or less
Rated breaking capacity Icu/Ics (kA)	IEC 60947-2 EN 60947-2 JIS C 8201-2-2	AC	440V	2.5/2	7.5/4	10/5
			415V	2.5/2	7.5/4	10/5
			400V	2.5/2	7.5/4	10/5
			380V	2.5/2	7.5/4	10/5
			230V	5/3	10/5	25/13
			200V	5/3	10/5	25/13
			100V	5/3	10/5	25/13
	GB14048.2	AC	400V	2.5/2	7.5/4	10/5
			230V	5/3	10/5	25/13
Conforming to standards	CE Marking			● (TÜV)	● (TÜV)	● (TÜV)
	CCC certificate			●	●	●
	Electrical Appliance and Material Safety Law *1			●	●	●
Dimensions (mm) 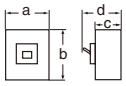			a	75	75	75
			b	100	100	100
			c	60	60	60
			d	84	84	84
Mass (kg)				0.6	0.6	0.6
Tripping device				Hydraulic-magnetic		
Front mounting, front connection			No-mark	○	○	○
Front mounting, rear connection			X	○	○	○
Flush mounting, front connection			E	○	○	○
Flush mounting, top & bottom connection			Y	○	○	○
Plug-in mounting			P	○	○	○
IEC 35mm wide rail mounting			No-mark	○	○	○
Internal accessories			Page B1-149			
Alarm switch			K	○	○	○
Auxiliary switch			W	○	○	○
Undervoltage trip			R	○	○	○
Shunt trip			F	○	○	○
Earth alarm switch			L	–	–	–
External accessories			Page B1-152			
Handle padlocking device	Cap type		Q1	○	○	○
Handle padlocking device	Plate type		Q2	▲	▲	▲
Operating handle	N-type		N	○	○	○
Operating handle	V-type		V	○	○	○
Terminal cover	Short		BT□S	○	○	○
Terminal cover	Long		BT□L	○	○	○
Insulation barrier	Interphase		BP	○	○	○
	Earth		BL	○	○	○
Handle locking cover			L1	○	○	○
Flat terminal			SS	○	○	○
Block terminal			SL	–	–	–

●: Approved ○: Available –: Not available ▲ : Factory-mounted accessory
Note: *1 Electrical Appliance and Material Safety Law of Japan

Rated voltage (V)	Operational voltage range (V)
100–230	80–264
100–230–440	80–484

Fuji Electric FA Components & Systems Co., Ltd.
Information subject to change without notice

■ G-TWIN Standard Series

Ampere frame				100A		
Type				**EW100AAG**	**EW100EAG**	
Pole				3	2	3
Rated current Reference amb. temp. (40°C)		In(A)		60, 63, 75, 100	50, 60, 63, 75, 100	50, 60, 63, 75, 100
Rated impulse withstand voltage		Uimp(kV)		4	4	6
Isolation compliant				●	●	●
Rated voltage Ue (AC V)				100-230	100-230	100-230-400
Rated sensitive current (mA)				30, 100/200/500 changeover	30, 100/200 changeover	30, 100/200/500 changeover
Tripping time (s)				0.1 or less	0.1 or less	0.1 or less
Rated breaking capacity Icu/Ics (kA)	IEC 60947-2 EN 60947-2 JIS C 8201-2-2	AC	440V	–	–	10/5
			415V	–	–	10/5
			400V	–	–	10/5
			380V	–	–	10/5
			230V	5/3	10/5	25/13
			200V	5/3	10/5	25/13
			100V	5/3	10/5	25/13
	GB14048.2	AC	400V	–	–	10/5
			230V	5/3	10/5	25/13
Conforming to standards	CE Marking			● (TÜV)	● (TÜV)	● (TÜV)
	CCC certificate			●	●	●
	Electrical Appliance and Material Safety Law *1			●	●	●
Dimensions (mm)	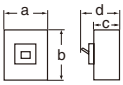		a	75	75	75
			b	100	100	100
			c	60	60	60
			d	84	84	84
Mass (kg)				0.6	0.6	0.6
Tripping device				Thermal -magnetic		
Front mounting, front connection			No-mark	○	○	○
Front mounting, rear connection			X	○	○	○
Flush mounting, front connection			E	○	○	○
Flush mounting, top & bottom connection			Y	○	○	○
Plug-in mounting			P	○	○	○
IEC 35mm wide rail mounting			No-mark	○	○	○
Internal accessories			Page B1-149			
Alarm switch			K	○	○	○
Auxiliary switch			W	○	○	○
Undervoltage trip			R	○	○	○
Shunt trip			F	○	○	○
Earth alarm switch			L	–	–	–
External accessories			Page B1-152			
Handle padlocking device	Cap type		Q1	○	○	○
Handle padlocking device	Plate type		Q2	▲	▲	▲
Operating handle	N-type		N	○	○	○
Operating handle	V-type		V	○	○	○
Terminal cover	Short		BT□S	○	○	○
Terminal cover	Long		BT□L	○	○	○
Insulation barrier	Interphase		BP	○	○	○
	Earth		BL	○	○	○
Handle locking cover			L1	○	○	○
Flat terminal			SS	○	○	○
Block terminal			SL	–	–	–

●: Approved ○: Available –: Not available ▲ : Factory-mounted accessory
Note: *1 Electrical Appliance and Material Safety Law of Japan

Rated voltage (V)	Operational voltage range (V)
100–230	80–264
100–230–440	80–484

Earth Leakage Circuit Breakers
G-TWIN series Quick reference guide

■ G-TWIN Standard Series

Ampere frame				125A				
Type				**EW125JAG**		**EW125SAG**		**EW125RAG**	
Pole				3	4	3	4	3	4
Rated current Reference amb. temp. (40°C)		In(A)		15, 20, 30, 40, 50, 60, 75, 100, 125					
Rated impulse withstand voltage		Uimp(kV)		6		6		6	
Isolation compliant				●		●		●	
Rated voltage Ue (AC V)				100-230-440					
Type of earth leakage trip action				AC type					
Instantaneous trip type	Rated sensitive current (mA)			30					
	Tripping time (s)			0.1 or less					
Instantaneous/time-delay trip type	Rated sensitive current (mA)			100/300/500/1000 changeover					
	Tripping time (s)			0.1/0.4/1/2 changeover					
	Inertia non-tripping time (s) (2IΔn)			0/0.2/0.5/1					
Rated breaking capacity Icu/Ics (kA)	IEC60947-2 EN60947-2 JISC8201-2-2	AC	440V	30/15		36/18		50/25	
			415V	30/15		36/18		50/25	
			400V	30/15		36/18		50/25	
			380V	30/15		36/18		50/25	
			230V	50/25		85/43		100/50	
			200V	50/25		85/43		100/50	
			100V	50/25		85/43		100/50	
	GB14048.2	AC	400V	30/15		36/18		50/25	
			230V	50/25		85/43		100/50	
Conforming to standards	CE Marking			● (TÜV)		● (TÜV)		● (TÜV)	
	CCC certificate			●		●		●	
	Electrical Appliance and Material Safety Law *1			● (except for 125A)		● (except for 125A)		● (except for 125A)	
Dimensions (mm) 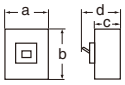			a	90	120	90	120	90	120
			b	155		155		155	
			c	68		68		68	
			d	95		95		95	
Mass (kg)				1.3	1.7	1.2	1.6	1.3	1.7
Tripping device				Thermal-magnetic					
Front mounting, front connection			No-mark	○	○	○	○	○	○
Front mounting, rear connection			X	○	○	○	○	○	○
Flush mounting, front connection			E	○	○	○	○	○	○
Plug-in mounting			P	○	–	○	–	○	–
Internal accessories			Page B1-150						
Alarm switch			K	○	○	○	○	○	○
Auxiliary switch			W	○	○	○	○	○	○
Undervoltage trip			R	○	○	○	○	○	○
Shunt trip			F	○	○	○	○	○	○
Earth alarm switch			L	○	○	○	○	○	○
External accessories			Page B1-152						
Handle padlocking device Cap type			Q1	○	○	○	○	○	○
Handle padlocking device Plate type			Q2	○	○	○	○	○	○
Operating handle N-type			N	○	○	○	○	○	○
Operating handle V-type			V	○	○	○	○	○	○
Terminal cover Short			BT□S	○	○	○	○	○	○
Terminal cover Long			BT□L	○	○	○	○	○	○
Insulation barrier Interphase			BP	○	○	○	○	○	○
Handle locking cover			L1	○	○	○	○	○	○
Flat terminal			SS	○	○	○	○	○	○
Block terminal			SL	○	○	○	○	○	○

●: Approved ○: Available –: Not available ▲ : Factory-mounted accessory
Note: *1 Electrical Appliance and Material Safety Law of Japan

Rated voltage (V)	Operational voltage range (V)
100–230–440	80–484

Information subject to change without notice

Earth Leakage Circuit Breakers
G-TWIN series Quick reference guide

■ G-TWIN Standard Series

Ampere frame				160A						
Type				**EW160EAG**	**EW160JAG**		**EW160SAG**		**EW160RAG**	
Pole				3	3	4	3	4	3	4
Rated current Reference amb. temp. (40°C)		In(A)		125, 150, 160						
Rated impulse withstand voltage		Uimp(kV)		6	6		6		6	
Isolation compliant				●	●		●		●	
Rated voltage Ue (AC V)				100-230-440						
Type of earth leakage trip action				AC type						
Instantaneous trip type	Rated sensitive current (mA)			30						
	Tripping time (s)			0.1 or less						
Instantaneous/time-delay trip type	Rated sensitive current (mA)			100/300/500/1000 changeover						
	Tripping time (s)			0.1/0.4/1/2 changeover						
	Inertia non-tripping time (s) (2IΔn)			0/0.2/0.5/1						
Rated breaking capacity Icu/Ics (kA)	IEC60947-2 EN60947-2 JISC8201-2-2	AC	440V	18/9	30/15		36/18		50/25	
			415V	18/9	30/15		36/18		50/25	
			400V	18/9	30/15		36/18		50/25	
			380V	18/9	30/15		36/18		50/25	
			230V	36/18	50/25		85/43		100/50	
			200V	36/18	50/25		85/43		100/50	
			100V	36/18	50/25		85/43		100/50	
	GB14048.2	AC	400V	18/9	30/15		36/18		50/25	
			230V	36/18	50/25		85/43		100/50	
Conforming to standards	CE Marking certified (TÜV)			● (TÜV)	● (TÜV)		● (TÜV)		● (TÜV)	
	CCC certificate			●	●		●		●	
Dimensions (mm)			a	105	105	140	105	140	105	140
			b	165	165		165		165	
			c	68	68		68		68	
			d	95	95		95		95	
Mass (kg)				1.8	1.8	2.3	1.8	2.3	1.8	2.3
Tripping device				Thermal-magnetic						
Front mounting, front connection			No-mark	○	○	○	○	○	○	○
Front mounting, rear connection			X	○	○	○	○	○	○	○
Flush mounting, front connection			E	○	○	○	○	○	○	○
Plug-in mounting			P	○	○	–	○	–	○	–
Internal accessories			Page B1-150							
Alarm switch			K	○	○	○	○	○	○	○
Auxiliary switch			W	○	○	○	○	○	○	○
Undervoltage trip			R	○	○	○	○	○	○	○
Shunt trip			F	○	○	○	○	○	○	○
Earth alarm switch			L	○	○	○	○	○	○	○
External accessories			Page B1-152							
Handle padlocking device	Cap type		Q1	○	○	○	○	○	○	○
Handle padlocking device	Plate type		Q2	○	○	○	○	○	○	○
Operating handle	N-type		N	○	○	○	○	○	○	○
Operating handle	V-type		V	○	○	○	○	○	○	○
Terminal cover	Short		BT□S	○	○	○	○	○	○	○
Terminal cover	Long		BT□L	○	○	○	○	○	○	○
Insulation barrier	Interphase		BP	○	○	○	○	○	○	○
Handle locking cover			L1	○	○	○	○	○	○	○
Flat terminal			SS	○	○	○	○	○	○	○
Block terminal			SL	○	○	○	○	○	○	○

●: Approved ○: Available –: Not available ▲: Factory-mounted accessory
Note: *1 Electrical Appliance and Material Safety Law of Japan

Rated voltage (V)	Operational voltage range (V)
100–230–440	80–484

Earth Leakage Circuit Breakers
G-TWIN series Quick reference guide

■ G-TWIN Standard Series

Ampere frame				250A					
Type				**EW250EAG**	**EW250JAG**		**EW250SAG**		**EW250RAG**	
Pole				3	3	4	3	4	3	4
Rated current Reference amb. temp. (40°C)		In(A)		175, 200, 225, 250		175,200,225	175,200,225,250	175,200,225	175,200,225,250	175,200,225
Rated impulse withstand voltage		Uimp(kV)		6	6		6		6	
Isolation compliant				●	●		●		●	
Rated voltage Ue (AC V)				100-230-440						
Type of earth leakage trip action				AC type						
Instantaneous trip type	Rated sensitive current (mA)			30						
	Tripping time (s)			0.1 or less						
Instantaneous/time-delay trip type	Rated sensitive current (mA)			100/300/500/1000 changeover						
	Tripping time (s)			0.1/0.4/1/2 changeover						
	Inertia non-tripping time (s) (2IΔn)			0/0.2/0.5/1						
Rated breaking capacity Icu/Ics (kA)	IEC60947-2 EN60947-2 JISC8201-2-2	AC	440V	18/9	30/15		36/18		50/25	
			415V	18/9	30/15		36/18		50/25	
			400V	18/9	30/15		36/18		50/25	
			380V	18/9	30/15		36/18		50/25	
			230V	36/18	50/25		85/43		100/50	
			200V	36/18	50/25		85/43		100/50	
			100V	36/18	50/25		85/43		100/50	
	GB14048.2	AC	400V	18/9	30/15		36/18		50/25	
			230V	36/18	50/25		85/43		100/50	
Conforming to standards	CE Marking			● (TÜV)	● (TÜV)		● (TÜV)		● (TÜV)	
	CCC certificate			●	●		●		●	
Dimensions (mm) 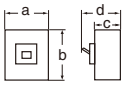			a	105	105	140	105	140	105	140
			b	165	165		165		165	
			c	68	68		68		68	
			d	95	95		95		95	
Mass (kg)				1.8	1.8	2.3	1.8	2.3	1.8	2.3
Tripping device				Thermal-magnetic						
Front mounting, front connection			No-mark	○	○	○	○	○	○	○
Front mounting, rear connection			X	○	○	○	○	○	○	○
Flush mounting, front connection			E	○	○	○	○	○	○	○
Plug-in mounting			P	○	○	–	○	–	○	–
Internal accessories			Page B1-150							
Alarm switch			K	○	○	○	○	○	○	○
Auxiliary switch			W	○	○	○	○	○	○	○
Undervoltage trip			R	○	○	○	○	○	○	○
Shunt trip			F	○	○	○	○	○	○	○
Earth alarm switch			L	○	○	○	○	○	○	○
External accessories			Page B1-152							
Handle padlocking device	Cap type		Q1	○	○	○	○	○	○	○
Handle padlocking device	Plate type		Q2	○	○	○	○	○	○	○
Operating handle	N-type		N	○	○	○	○	○	○	○
Operating handle	V-type		V	○	○	○	○	○	○	○
Terminal cover	Short		BT□S	○	○	○	○	○	○	○
Terminal cover	Long		BT□L	○	○	○	○	○	○	○
Insulation barrier	Interphase		BP	○	○	○	○	○	○	○
Handle locking cover			L1	○	○	○	○	○	○	○
Flat terminal			SS	○	○	○	○	○	○	○
Block terminal			SL	○	○	○	○	○	○	○

●: Approved ○: Available –: Not available ▲ : Factory-mounted accessory
Note: *1 Electrical Appliance and Material Safety Law of Japan

Rated voltage (V)	Operational voltage range (V)
100–230–440	80–484

Fuji Electric FA Components & Systems Co., Ltd.
Information subject to change without notice

■ G-TWIN Standard Series

Ampere frame				400A					
Type				**EW400EAG**	**EW400SAG**	**EW400RAG**		**EW400HAG**	
Pole				3	3	3	4	3	4
Rated current Reference amb. temp. (40°C)		In(A)		250, 300, 350, 400					
Rated impulse withstand voltage		Uimp(kV)		6	6	6		6	
Isolation compliant				●	●	●		●	
Rated voltage Ue (AC V)		IEC		100-230-440					
Type of earth leakage trip action				AC type					
Instantaneous trip type	Rated sensitive current (mA)			30					
	Tripping time (s)			0.1 or less					
Instantaneous/time-delay trip type	Rated sensitive current (mA)			100/300/500/1000 changeover					
	Tripping time (s)			0.1/0.4/1/2 changeover					
	Inertia non-tripping time (s) (2IΔn)			0/0.2/0.5/1					
Rated breaking capacity Icu/Ics (kA)	IEC60947-2 EN60947-2 JISC8201-2-2	AC	440V	30/15	36/18	50/25		70/35	
			415V	30/15	36/18	50/25		70/35	
			400V	30/15	36/18	50/25		70/35	
			380V	30/15	36/18	50/25		70/35	
			230V	50/25	85/43	100/50		125/63	
			200V	50/25	85/43	100/50		125/63	
			100V	50/25	85/43	100/50		125/63	
	GB14048.2	AC	400V	30/15	36/18	50/25		70/35	
			230V	50/25	85/43	100/50		125/63	
Conforming to standards	CE Marking			● (TÜV)	● (TÜV)	● (TÜV)		● (TÜV)	
	CCC certificate			●	●	●		●	
Dimensions (mm) 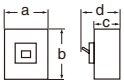			a	140	140	140	185	140	185
			b	257	257	257		257	
			c	103	103	103		103	
			d	146	146	146		146	
Mass (kg)				5.8	5.8	5.8	7.8	5.8	7.8
Tripping device				Thermal-magnetic					
Front mounting, front connection			No-mark	○	○	○	○	○	○
Front mounting, rear connection			X	○	○	○	○	○	○
Flush mounting, front connection			E	○	○	○	○	○	○
Plug-in mounting			P	○	○	○	–	○	–
Internal accessories			Page B1-151						
Alarm switch			K	○	○	○	○	○	○
Auxiliary switch			W	○	○	○	○	○	○
Undervoltage trip			R	○	○	○	○	○	○
Shunt trip			F	○	○	○	○	○	○
Earth alarm switch			L	▲	▲	▲	▲	▲	▲
External accessories			Page B1-152						
Handle padlocking device Cap type			QN	○	○	○	○	○	○
Handle padlocking device Plate type			Q2	○	○	○	○	○	○
Operating handle N-type			N	○	○	○	○	○	○
Operating handle V-type			V	○	○	○	○	○	○
Terminal cover Short			BT□S	○	○	○	○	○	○
Terminal cover Long			BT□L	○	○	○	○	○	○
Insulation barrier Interphase			BP	○	○	○	○	○	○
Handle locking cover			L1	○	○	○	○	○	○
Flat terminal			SS	○*2	○*2	○*2	○*2	○*2	○*2
Block terminal			SL	○	○	○	○	○	○

●: Approved ○: Available –: Not available ▲: Factory-mounted accessory
Note: *1 Electrical Appliance and Material Safety Law of Japan
*2 Standard provided

Rated voltage (V)	Operational voltage range (V)
100–230–440	80–484

Earth Leakage Circuit Breakers
G-TWIN series Quick reference guide

■ G-TWIN Standard Series

Ampere frame				630A			800A		
Type				**EW630EAG**	**EW630RAG**	**EW630HAG**	**EW800EAG**	**EW800RAG**	**EW800HAG**
Pole				3	3	3	3	3	3
Rated current Reference amb. temp. (40°C)		In(A)		500, 600, 630			700, 800		
Rated impulse withstand voltage		Uimp(kV)		6	6	6	6	6	6
Isolation compliant				●	●	●	●	●	●
Rated voltage Ue (AC V)				100-230-440					
Type of earth leakage trip action				AC type					
Instantaneous/time-delay trip type	Rated sensitive current (mA)			100/300/500/1000 changeover					
	Tripping time (s)			0.1/0.4/1/2 changeover					
	Inertia non-tripping time (s) (2IΔn)			0/0.2/0.5/1					
Rated breaking capacity Icu/Ics (kA)	IEC60947-2 EN60947-2 JISC8201-2-2	AC	440V	36/18	50/25	70/35	36/18	50/25	70/35
			415V	36/18	50/25	70/35	36/18	50/25	70/35
			400V	36/18	50/25	70/35	36/18	50/25	70/35
			380V	36/18	50/25	70/35	36/18	50/25	70/35
			230V	50/25	100/50	125/63	50/25	100/50	125/63
			200V	50/25	100/50	125/63	50/25	100/50	125/63
			100V	50/25	100/50	125/63	50/25	100/50	125/63
	GB14048.2	AC	400V	36/18	50/25	70/35	36/18	50/25	70/35
			230V	50/25	100/50	125/63	50/25	100/50	125/63
Conforming to standards	CE Marking			● (TÜV)	● (TÜV)	● (TÜV)	● (TÜV)	● (TÜV)	● (TÜV)
	CCC certificate			●	●	●	●	●	●
Dimensions (mm) 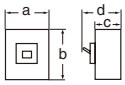			a	210	210	210	210	210	210
			b	275	275	275	275	275	275
			c	103	103	103	103	103	103
			d	146	146	146	146	146	146
Mass (kg)				9.1	9.1	9.1	9.6	9.6	9.6
Tripping device				Thermal-magnetic					
Front mounting, front connection			No-mark	○	○	○	○	○	○
Front mounting, rear connection			X	○	○	○	○	○	○
Flush mounting, front connection			E	○	○	○	○	○	○
Plug-in mounting			P	○	○	○	○	○	○
Internal accessories			Page B1-151						
Alarm switch			K	○	○	○	○	○	○
Auxiliary switch			W	○	○	○	○	○	○
Undervoltage trip			R	○	○	○	○	○	○
Shunt trip			F	○	○	○	○	○	○
Earth alarm switch			L	▲	▲	▲	▲	▲	▲
External accessories			Page B1-152						
Handle padlocking device	Cap type		QN	○	○	○	○	○	○
Handle padlocking device	Plate type		Q2	○	○	○	○	○	○
Operating handle	N-type		N	○	○	○	○	○	○
Operating handle	V-type		V	○	○	○	○	○	○
Terminal cover	Short		BT□S	○	○	○	○	○	○
Terminal cover	Long		BT□L	○	○	○	○	○	○
Insulation barrier	Interphase		BP	○	○	○	○	○	○
Handle locking cover			L1	○	○	○	○	○	○
Flat terminal			SS	○*2	○*2	○*2	○*2	○*2	○*2
Block terminal			SL	○	○	○	○	○	○

●: Approved ○: Available –: Not available ▲ : Factory-mounted accessory
Note: *1 Electrical Appliance and Material Safety Law of Japan
*2 Standard provided

Rated voltage (V)	Operational voltage range (V)
100–230–440	80–484

Fuji Electric FA Components & Systems Co., Ltd.
Information subject to change without notice

■ G-TWIN Global Series

Ampere frame				50A	100A	
Type				**EW50RAGU**	**EW100EAGU**	
Pole				3	2	3
Rated current Reference amb. temp. (40°C)		In(A)		3, 5, 10, 15, 20, 30, 32, 40, 50	60, 63, 70, 75, 80, 90, 100	
Rated impulse withstand voltage		Uimp(kV)		6	4	6
Isolation compliant				●	●	●
Rated voltage Ue (AC V)		IEC		100-230-440	100-230	100-230-440
		UL		240	240	240
Rated sensitive current (mA)				30, 50, 100/200/500 changeover	30, 100/200 changeover	30, 50, 100/200/500 changeover
Tripping time (s)				0.1 or less	0.1 or less	0.1 or less
Rated breaking capacity	IEC 60947-2 EN 60947-2 JIS C 8201-2-2 Icu/Ics (kA)	AC	440V	10/5	7.5/4	10/5
			415V	10/5	7.5/4	10/5
			400V	10/5	7.5/4	10/5
			380V	10/5	7.5/4	10/5
			230V	25/13	7.5/4	25/13
			200V	25/13	7.5/4	25/13
			100V	25/13	10/5	25/13
	GB14048.2 Icu/Ics(kA)	AC	400V	10/5	7.5/4	10/5
			230V	25/13	10/5	25/13
	UL489 CAN/CSA C22.2 NO.5 (kA)	AC	480V/Δ	–	–	–
			480V/Y	–	–	–
			240V	14	14	14
Conforming to standards	CE Marking			● (TÜV)	● (TÜV)	● (TÜV)
	CCC certificate			●	●	●
	UL Listed (NEMA AB1)			●	●	●
	Electrical Appliance and Material Safety Law *1			●	●	●
Dimensions (inch(mm))	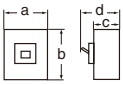		a	2.953 (75)	2.953 (75)	2.953 (75)
			b	4.724 (120)	4.724 (120)	4.724 (120)
			c	2.362 (60)	2.362 (60)	2.362 (60)
			d	3.307 (84)	3.307 (84)	3.307 (84)
Mass (kg)				0.6	0.6	0.6
Tripping device				Hydraulic-magnetic		
Connecting terminal		Page B1-118				
Screw		S□		○	○	○
Flat				○	○	○
Block				–	–	–
Internal accessories		Page B1-149				
Alarm switch		K		○	○	○
Auxiliary switch		W		○	○	○
Undervoltage trip		R		○	○	○
Shunt trip		F		○	○	○
Earth alarm switch		L		–	–	–
External accessories		Page B1-152				
Operating handle N-type		N		○	○	○
Operating handle V-type		V		○	○	○
Terminal cover Short		BT□S		○*2	○	○
Terminal cover Long		BT□L		○	○	○
Insulation barrier Interphase		BP		○	○	○

●: Approved ○: Available –: Not available
Note: *1 Electrical Appliance and Material Safety Law of Japan
*2 Standard provided

Rated voltage (V)	Operational voltage range (V)
100–230	80–264
240	80–264
100–230–440	80-484

Earth Leakage Circuit Breakers
G-TWIN series Quick reference guide

■ G-TWIN Global Series

Ampere frame				125A	
Type				**EW125JAGU**	**EW125RAGU**
Pole				3	3
Rated current Reference amb. temp. (40°C)		In(A)		15, 20, 30, 40, 50, 60, 75, 100, 125	
Rated impulse withstand voltage		Uimp(kV)		6	6
Isolation compliant				●	●
Rated voltage Ue (AC V)		IEC		100-230-440	
		UL		240-480	
Type of earth leakage trip action				AC type	
Instantaneous trip type	Rated sensitive current (mA)			30	
	Tripping time (s)			0.1 or less	
Instantaneous/time-delay trip type	Rated sensitive current (mA)			100/200/500/1000 changeover	
	Tripping time (s)			0.1/0.4/1/2 changeover	
	Inertia non-tripping time (s) (2IΔn)			0/0.2/0.5/1	
Rated breaking capacity	IEC60947-2 EN60947-2 JISC8201-2-2 Icu/Ics (kA)	AC	440V	30/15	50/25
			415V	30/15	50/25
			400V	30/15	50/25
			380V	30/15	50/25
			230V	50/25	100/50
			200V	50/25	100/50
			100V	50/25	100/50
	GB14048.2 Icu/Ics (kA)	AC	400V	30/15	50/25
			230V	50/25	100/50
	UL489 CAN/CSA C22.2 NO.5 (kA)	AC	480V/Δ	30	50
			480V/Y	30	50
			240V	50	100
Conforming to standards	CE Marking			● (TÜV)	● (TÜV)
	CCC certificate			●	●
	UL Listed (NEMA AB1)			●	●
	Electrical Appliance and Material Safety Law *1			● (except for 125A)	● (except for 125A)
Dimensions (inch(mm))			a	3.543 (90)	3.543 (90)
			b	6.732 (171)	6.732 (171)
			c	2.677 (68)	2.677 (68)
			d	3.740 (95)	3.740 (95)
Mass (kg)				1.3	1.3
Tripping device				Thermal-magnetic	
Connecting terminal			Page B1-118		
Screw			S□	○	○
Flat				○	○
Block				○	○
Internal accessories			Page B1-150		
Alarm switch			K	○	○
Auxiliary switch			W	○	○
Undervoltage trip			R	○	○
Shunt trip			F	○	○
Earth alarm switch			L	○	○
External accessories			Page B1-152		
Operating handle N-type			N	○	○
Operating handle V-type			V	○	○
Operating handle F-type			F	○	○
Terminal cover Short			BT□S	○ *2	○ *2
Terminal cover Long			BT□L	○	○
Insulation barrier Interphase			BP	○	○

●: Approved ○: Available –: Not available
Note: *1 Electrical Appliance and Material Safety Law of Japan
*2 Standard provided

Rated voltage (V)	Operational voltage range (V)
240–480	80–504
100–230–440	80-484

■ G-TWIN Global Series

Ampere frame				250A	
Type				**EW250JAGU**	**EW250RAGU**
Pole				3	3
Rated current Reference amb. temp. (40°C)		In(A)		125, 150, 160, 175, 200, 225, 250	
Rated impulse withstand voltage		Uimp(kV)		6	6
Isolation compliant				●	●
Rated voltage Ue (AC V)		IEC		100-230-440	
		UL		240-480	
Type of earth leakage trip action				AC type	
Instantaneous trip type	Rated sensitive current (mA)			30	
	Tripping time (s)			0.1 or less	
Instantaneous/time-delay trip type	Rated sensitive current (mA)			100/200/500/1000 changeover	
	Tripping time (s)			0.1/0.4/1/2 changeover	
	Inertia non-tripping time (s) (2IΔn)			0/0.2/0.5/1	
Rated breaking capacity	IEC60947-2 EN60947-2 JISC8201-2-2 Icu/Ics (kA)	AC	440V	30/15	50/25
			415V	30/15	50/25
			400V	30/15	50/25
			380V	30/15	50/25
			230V	50/25	100/50
			200V	50/25	100/50
			100V	50/25	100/50
	GB14048.2 Icu/Ics (kA)	AC	400V	30/15	50/25
			230V	50/25	100/50
	UL489 CAN/CSA C22.2 NO.5 (kA)	AC	480V/Δ	30	50
			480V/Y	30	50
			240V	50	100
Conforming to standards	CE Marking			● (TÜV)	● (TÜV)
	CCC certificate			●	●
	UL Listed (NEMA AB1)			●	●
Dimensions (inch(mm)) 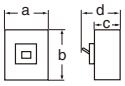			a	4.134 (105)	4.134 (105)
			b	7.126 (181)	7.126 (181)
			c	2.677 (68)	2.677 (68)
			d	3.740 (95)	3.740 (95)
Mass (kg)				1.8	1.8
Tripping device				Thermal-magnetic	
Connecting terminal			Page B1-118		
Screw			S□	○	○
Flat				○	○
Block				○	○
Internal accessories			Page B1-150		
Alarm switch			K	○	○
Auxiliary switch			W	○	○
Undervoltage trip			R	○	○
Shunt trip			F	○	○
Earth alarm switch			L	○	○
External accessories			Page B1-152		
Operating handle N-type			N	○	○
Operating handle V-type			V	○	○
Operating handle F-type			F	○	○
Terminal cover Short			BT□S	○ *1	○ *1
Terminal cover Long			BT□L	○	○
Insulation barrier Interphase			BP	○	○

●: Approved ○: Available –: Not available
Note: *1 Standard provided

Rated voltage (V)	Operational voltage range (V)
240–480	80–504
100–230–440	80-484

Earth Leakage Circuit Breakers
G-TWIN series Quick reference guide

■ G-TWIN Global Series

Ampere frame				400A		
Type				**EW400SAGU**	**EW400RAGU**	**EW400HAGU**
Pole				3	3	3
Rated current Reference amb. temp. (40°C)		In(A)		250, 300, 350, 400		
Rated impulse withstand voltage		Uimp(kV)		6	6	6
Isolation compliant				●	●	●
Rated voltage Ue (AC V)		IEC		100-230-440		
		UL		240-480		
Type of earth leakage trip action				AC type		
Instantaneous trip type	Rated sensitive current (mA)			30		
	Tripping time (s)			0.1 or less		
Instantaneous/time-delay trip type	Rated sensitive current (mA)			100/200/500/1000 changeover		
	Tripping time (s)			0.1/0.4/1/2 changeover		
	Inertia non-tripping time (s) (2IΔn)			0/0.2/0.5/1		
Rated breaking capacity	IEC60947-2 EN60947-2 JISC8201-2-2 Icu/Ics (kA)	AC	440V	36/18	50/25	70/35
			415V	36/18	50/25	70/35
			400V	36/18	50/25	70/35
			380V	36/18	50/25	70/35
			230V	85/43	100/50	125/63
			200V	85/43	100/50	125/63
			100V	85/43	100/50	125/63
	GB14048.2 Icu/Ics (kA)	AC	400V	36/18	50/25	70/35
			230V	85/43	100/50	125/63
	UL489 CAN/CSA C22.2 NO.5 (kA)	AC	480V/Δ	35	50	65 (with block terminal: 50)
			480V/Y	35	50	65 (with block terminal: 50)
			240V	50	100	100
Conforming to standards	CE Marking			● (TÜV)	● (TÜV)	● (TÜV)
	CCC certificate			●	●	●
	UL Listed (NEMA AB1)			●	●	●
Dimensions (inch(mm)) 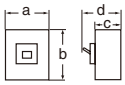			a	5.512 (140)	5.512 (140)	5.512 (140)
			b	10.12 (257)	10.12 (257)	10.12 (257)
			c	4.055 (103)	4.055 (103)	4.055 (103)
			d	5.748 (146)	5.748 (146)	5.748 (146)
Mass (kg)				6.3	6.3	6.3
Tripping device				Thermal-magnetic		
Connecting terminal			Page B1-118			
Screw			S□	–	–	–
Flat				○	○	○
Block				○	○	○
Internal accessories			Page B1-150			
Alarm switch			K	○	○	○
Auxiliary switch			W	○	○	○
Undervoltage trip			R	○	○	○
Shunt trip			F	○	○	○
Earth alarm switch			L	▲	▲	▲
External accessories			Page B1-152			
Operating handle N-type			N	○	○	○
Operating handle V-type			V	○	○	○
Operating handle F-type			F	○	○	○
Terminal cover Short			BT□S	○	○	○
Terminal cover Long			BT□L	○	○	○
Insulation barrier Interphase			BP	○	○	○

●: Approved ○: Available –: Not available ▲ : Factory-mounted accessory

Rated voltage (V)	Operational voltage range (V)
240–480	80–504
100–230–440	80-484

Fuji Electric FA Components & Systems Co., Ltd.
Information subject to change without notice

■ G-TWIN Global Series

Ampere frame				630A
Type				**EW630RAGU**
Pole				3
Rated current Reference amb. temp. (40°C)		In(A)		500, 600, 630*1
Rated impulse withstand voltage		Uimp(kV)		6
Isolation compliant				●
Rated voltage Ue (AC V)		IEC		100-230-440
		UL		240-480
Instantaneous/time-delay trip type	Rated sensitive current (mA)			100/200/500/1000 changeover
	Tripping time (s)			0.1/0.4/1/2 changeover
	Inertia non-tripping time (s) (2IΔn)			0/0.2/0.5/1
Rated breaking capacity	IEC60947-2 EN60947-2 JISC8201-2-2 Icu/Ics (kA)	AC	440V	50/25
			415V	50/25
			400V	50/25
			380V	50/25
			230V	100/50
			200V	100/50
			100V	100/50
	GB14048.2 Icu/Ics (kA)	AC	400V	50/25
			230V	100/50
	UL489 CAN/CSA C22.2 NO.5 (kA)	AC	480V/Δ	50
			480V/Y	50
			240V	100
Conforming to standards	CE Marking			● (TÜV)
	CCC certificate			●
	UL Listed (NEMA AB1)			●
Dimensions (inch(mm)) 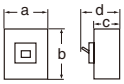			a	8.268 (210)
			b	10.83 (275)
			c	4.055 (103)
			d	5.748 (146)
Mass (kg)				10.2
Tripping device				Thermal-magnetic
Connecting terminal		Page B1-118		
Screw		S□		–
Flat				○
Block				○
Internal accessories		Page B1-151		
Alarm switch		K		○*2
Auxiliary switch		W		○*2
Undervoltage trip		R		○*2
Shunt trip		F		○*2
Earth alarm switch		L		▲
External accessories		Page B1-152		
Operating handle N-type		N		○
Operating handle V-type		V		○
Terminal cover Short		BT□S		○
Terminal cover Long		BT□L		○
Insulation barrier Interphase		BP		○

●: Approved ○: Available –: Not available ▲ : Factory-mounted accessory
Note: *1 Breakers for 630A cannot be manufactured with block terminals.
*2 Block terminals are not available.

Rated voltage (V)	Operational voltage range (V)
240–480	80–504
100–230–440	80-484

Earth Leakage Circuit Breakers
G-TWIN series Quick reference guide

■ G-TWIN Standard Series / Motor protection

Ampere frame				32A	
Type				**EW32EAM**	**EW32SAM**
Pole				3	3
Rated current Reference amb. temp. (40°C)		In(A)		1.4, 2.6, 4, 5, 8, 10, 16, 24, 32	0.7, 1.4, 2, 2.6, 4, 5, 8, 10, 12, 16, 24, 32
Rated impulse withstand voltage		Uimp(kV)		4	4
Isolation compliant				●	●
Rated voltage Ue(AC V)				100-230-440	100-230-440
Rated sensitive current (mA)				30, 100	30, 100/200/500 changeover
Tripping time (s)				0.1 or less	0.1 or less
Rated breaking capacity Icu/Ics (kA)	IEC 60947-2 EN 60947-2 JIS C 8201-2-2	AC	440V	1.5/1	2.5/2
			415V	1.5/1	2.5/2
			400V	1.5/1	2.5/2
			380V	1.5/1	2.5/2
			230V	2.5/2	5/3
			200V	2.5/2	5/3
			100V	5/3	5/3
	GB14048.2	AC	400V	1.5/1	2.5/2
			230V	2.5/2	5/3
Conforming to standards	CE Marking			●	●
	CCC certificate			●	●
	Electrical Appliance and Material Safety Law*1			●	●
Dimensions (mm)	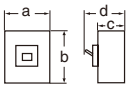		a	75	75
			b	100	100
			c	60	60
			d	84	84
Mass (kg)				0.5	0.5
Tripping device				Hydraulic-magnetic	Hydraulic-magnetic
Front mounting, front connection			No-mark	○	○
Front mounting, rear connection			X	○	○
Flush mounting, front connection			E	○	○
Flush mounting, top & bottom connection			Y	○	○
Plug-in mounting			P	○	○
IEC 35mm wide rail mounting			No-mark	○	○
Internal accessories			Page B1-149		
Alarm switch			K	○	○
Auxiliary switch			W	○	○
Undervoltage trip			R	○	○
Shunt trip			F	○	○
Earth alarm switch			L	–	–
External accessories			Page B1-152		
Handle padlocking device Cap type			Q1	○	○
Handle padlocking device Plate type			Q2	▲	▲
Operating handle N-type			N	○	○
Operating handle V-type			V	○	○
Terminal cover Short			BT□S	○	○
Terminal cover Long			BT□L	○	○
Insulation barrier Interphase			BP	○	○
Insulation barrier Earth			BL	○	○
Handle locking cover			L1	○	○
Flat terminal			SS	○	○
Block terminal			SL	–	–

●: Approved ○: Available –: Not available ▲ : Factory-mounted accessory
Note: *1 Electrical Appliance and Material Safety Law of Japan

Rated voltage (V)	Operational voltage range (V)
100–230–440	80–484

■ G-TWIN Standard Series / Motor protection

Ampere frame				50A	
Type				**EW50EAM**	**EW50SAM**
Pole				3	3
Rated current Reference amb. temp. (40°C)		In(A)		45	0.7, 1.4, 2, 2.6, 4, 5, 8, 10, 12, 16, 24, 32, 40, 45
Rated impulse withstand voltage		Uimp(kV)		4	6
Isolation compliant				●	●
Rated voltage Ue (AC V)				100-230-440	100-230-440
Rated sensitive current (mA)				30, 100/200 changeover	30, 100/200/500 changeover
Tripping time (s)				0.1 or less	0.1 or less
Rated breaking capacity Icu/Ics (kA)	IEC 60947-2 EN 60947-2 JIS C 8201-2-2	AC	440V	2.5/2	7.5/4
			415V	2.5/2	7.5/4
			400V	2.5/2	7.5/4
			380V	2.5/2	7.5/4
			230V	5/3	10/5
			200V	5/3	10/5
			100V	5/3	10/5
	GB14048.2	AC	400V	2.5/2	7.5/4
			230V	5/3	10/5
Conforming to standards	CE Marking			●	●
	CCC certificate			●	●
	Electrical Appliance and Material Safety Law*1			●	●
Dimensions (mm) 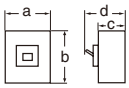			a	75	75
			b	100	100
			c	60	60
			d	84	84
Mass (kg)				0.6	0.6
Tripping device				Hydraulic-magnetic	Hydraulic-magnetic
Front mounting, front connection			No-mark	○	○
Front mounting, rear connection			X	○	○
Flush mounting, front connection			E	○	○
Flush mounting, top & bottom connection			Y	○	○
Plug-in mounting			P	○	○
IEC 35mm wide rail mounting			No-mark	○	○
Internal accessories			Page B1-149		
Alarm switch			K	○	○
Auxiliary switch			W	○	○
Undervoltage trip			R	○	○
Shunt trip			F	○	○
Earth alarm switch			L	–	–
External accessories			Page B1-152		
Handle padlocking device	Cap type		Q1	○	○
Handle padlocking device	Plate type		Q2	▲	▲
Operating handle	N-type		N	○	○
Operating handle	V-type		V	○	○
Terminal cover	Short		BT□S	○	○
Terminal cover	Long		BT□L	○	○
Insulation barrier	Interphase		BP	○	○
Insulation barrier	Earth		BL	○	○
Handle locking cover			L1	○	○
Flat terminal			SS	○	○
Block terminal			SL	–	–

●: Approved ○: Available –: Not available ▲ : Factory-mounted accessory
Note: *1 Electrical Appliance and Material Safety Law of Japan

Rated voltage (V)	Operational voltage range (V)
100–230–440	80–484

Earth Leakage Circuit Breakers
G-TWIN series Quick reference guide

■ G-TWIN Standard Series / Motor protection

Ampere frame				63A		100A
Type				**EW63EAM**	**EW63SAM**	**EW100EAM**
Pole				3	3	3
Rated current Reference amb. temp. (40°C)		In(A)		63	63	63, 75, 90
Rated impulse withstand voltage		Uimp(kV)		6	6	6
Isolation compliant				●	●	●
Rated voltage Ue (AC V)				100-230-440	100-230-440	100-230-440
Rated sensitive current (mA)				30, 100/200 changeover	30, 100/200/500 changeover	30, 100/200/500 changeover
Tripping time (s)				0.1 or less	0.1 or less	0.1 or less
Rated breaking capacity Icu/Ics (kA)	IEC 60947-2 EN 60947-2 JIS C 8201-2-2	AC	440V	2.5/2	7.5/4	10/5
			415V	2.5/2	7.5/4	10/5
			400V	2.5/2	7.5/4	10/5
			380V	2.5/2	7.5/4	10/5
			230V	5/3	10/5	25/13
			200V	5/3	10/5	25/13
			100V	5/3	10/5	25/13
	GB14048.2	AC	400V	2.5/2	7.5/4	10/5
			230V	5/3	10/5	25/13
Conforming to standards	CE Marking			●	●	●
	CCC certificate			●	●	●
	Electrical Appliance and Material Safety Law*1			●	●	●
Dimensions (mm) 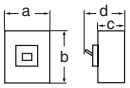			a	75	75	75
			b	100	100	100
			c	60	60	60
			d	84	84	84
Mass (kg)				0.6	0.6	0.6
Tripping device				Hydraulic-magnetic	Hydraulic-magnetic	Hydraulic-magnetic
Front mounting, front connection			No-mark	○	○	○
Front mounting, rear connection			X	○	○	○
Flush mounting, front connection			E	○	○	○
Flush mounting, top & bottom connection			Y	○	○	○
Plug-in mounting			P	○	○	○
IEC 35mm wide rail mounting			No-mark	○	○	○
Internal accessories			Page B1-149			
Alarm switch			K	○	○	○
Auxiliary switch			W	○	○	○
Undervoltage trip			R	○	○	○
Shunt trip			F	○	○	○
Earth alarm switch			L	–	–	–
External accessories			Page B1-152			
Handle padlocking device Cap type			Q1	○	○	○
Handle padlocking device Plate type			Q2	▲	▲	▲
Operating handle N-type			N	○	○	○
Operating handle V-type			V	○	○	○
Terminal cover Short			BT□S	○	○	○
Terminal cover Long			BT□L	○	○	○
Insulation barrier Interphase			BP	○	○	○
Insulation barrier Earth			BL	○	○	○
Handle locking cover			L1	○	○	○
Flat terminal			SS	○	○	○
Block terminal			SL	–	–	–

●: Approved ○: Available –: Not available ▲ : Factory-mounted accessory
Note: *1 Electrical Appliance and Material Safety Law of Japan

Rated voltage (V)	Operational voltage range (V)
100–230–440	80–484

Fuji Electric FA Components & Systems Co., Ltd.
Information subject to change without notice

■ G-TWIN Standard Series / Motor protection

Ampere frame				125A		250A		
Type				**EW125JAM**	**EW125RAM**	**EW250EAM**	**EW250JAM**	**EW250RAM**
Pole				3	3	3	3	3
Rated current Reference amb. temp. (40°C)		In(A)		16, 24, 32, 40, 45, 60, 75, 90		125, 150, 175, 225		
Rated impulse withstand voltage		Uimp(kV)		6	6	6	6	6
Isolation compliant				●	●	●	●	●
Rated voltage Ue (AC V)				100-230-440	100-230-440	100-230-440	100-230-440	100-230-440
Type of earth leakage trip action				AC type		AC type		
Instantaneous trip type	Rated sensitive current (mA)			30		30		
	Tripping time (s)			0.1 or less		0.1 or less		
Instantaneous/ time-delay trip type	Rated sensitive current (mA)			100/200/500/1000 changeover		100/200/500/1000 changeover		
	Tripping time (s)			0.1/0.4/1/2 changeover		0.1/0.4/1/2 changeover		
	Inertia non-tripping time (s) (2IΔn)			0/0.2/0.5/1		0/0.2/0.5/1		
Rated breaking capacity Icu/Ics (kA)	IEC 60947-2 EN 60947-2 JIS C 8201-2-2	AC	440V	30/15	50/25	18/9	30/15	50/25
			415V	30/15	50/25	18/9	30/15	50/25
			400V	30/15	50/25	18/9	30/15	50/25
			380V	30/15	50/25	18/9	30/15	50/25
			230V	50/25	100/50	36/18	50/25	100/50
			200V	50/25	100/50	36/18	50/25	100/50
			100V	50/25	100/50	36/18	50/25	100/50
	GB14048.2	AC	400V	30/15	50/25	18/9	30/15	50/25
			230V	50/25	100/50	36/18	50/25	100/50
Conforming to standards	CE Marking			●	●	●	●	●
	CCC certificate			●	●	●	●	●
	Electrical Appliance and Material Safety Law*1			●	●	–	–	–
Dimensions (mm)	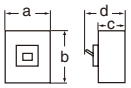		a	90	90	105	105	105
			b	155	155	165	165	165
			c	68	68	68	68	68
			d	95	95	95	95	95
Mass (kg)				1.3	1.3	1.8	1.8	1.8
Tripping device				Thermal-magnetic	Thermal-magnetic	Thermal-magnetic	Thermal-magnetic	Thermal-magnetic
Front mounting, front connection			No-mark	○	○	○	○	○
Front mounting, rear connection			X	○	○	○	○	○
Flush mounting, front connection			E	○	○	○	○	○
Flush mounting, top & bottom connection			Y	○	○	○	○	○
Plug-in mounting			P	○	○	○	○	○
Internal accessories			Page B1-150					
Alarm switch			K	○	○	○	○	○
Auxiliary switch			W	○	○	○	○	○
Undervoltage trip			R	○	○	○	○	○
Shunt trip			F	○	○	○	○	○
Earth alarm switch			L	○	○	○	○	○
External accessories			Page B1-152					
Handle padlocking device Cap type			Q1	○	○	○	○	○
Handle padlocking device Plate type			Q2	○	○	○	○	○
Operating handle N-type			N	○	○	○	○	○
Operating handle V-type			V	○	○	○	○	○
Terminal cover Short			BT□S	○	○	○	○	○
Terminal cover Long			BT□L	○	○	○	○	○
Insulation barrier Interphase			BP	○	○	○	○	○
Insulation barrier Earth			BL	○	○	○	○	○
Handle locking cover			L1	○	○	○	○	○
Flat terminal			SS	○	○	○	○	○
Block terminal			SL	–	–	–	–	–

●: Approved ○: Available –: Not available
Note: *1 Electrical Appliance and Material Safety Law of Japan

Rated voltage (V)	Operational voltage range (V)
100–230–440	80–484

Earth Leakage Circuit Breakers
G-TWIN series Mounting modifications

■ Mounting modifications

• Standard series

Standard type FUJI breakers are front mounting with front connections. The standard breaker can easily be modified to become front mounting rear connection type, flush mounting type and plug-in type. The additional parts such as insulation bases, barriers, covers and similar parts are added as required.

Front mounting
Front connection

BASIC DESIGN

Additional main parts	Front mounting Rear connection (X type)
Bar stud terminal 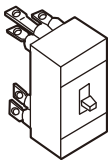	EW32 EW50 EW63 EW100
Bar stud terminal 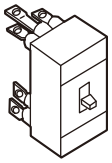	EW125 EW160 EW250 EW400 EW630 EW800 Each stud can be turned by 90°

Additional main parts	Flush mounting Rear connection (E type)
Bar stud terminal 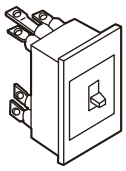	EW32 EW50 EW63 EW100
Bar stud terminal 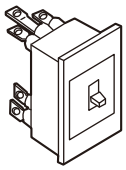	EW125 EW160 EW250 EW400 EW630 EW800 Each stud can be turned by 90°

Additional main parts	Flush mounting Top and bottom connection (Y type)
Decorative flush plate 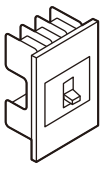	EW32 EW50 EW63 EW100

Additional main parts	Plug-in mounting (P type)
Bar stud terminal 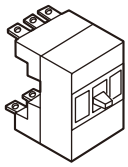	EW32 EW50 EW63 EW100
Round stud terminal 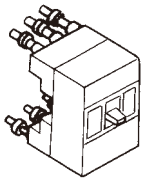	EW125
Bar stud terminal 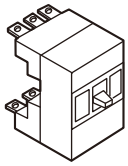	EW160 EW250 EW400 EW630 EW800 Each stud can be turned by 90°

Information subject to change without notice

Earth Leakage Circuit Breakers
G-TWIN series Mounting modifications

• **Global series**

Front mounting
Front connection

BASIC DESIGN

Screw

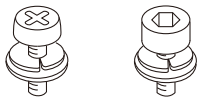

Flat terminal

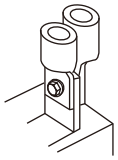

Block terminal

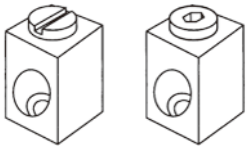

Earth Leakage Circuit Breakers G-TWIN series Terminal connection

■ Terminal connection/Front mounting, front connection

• 32AF to 100AF

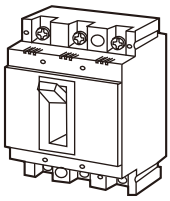

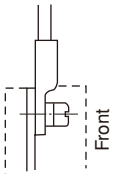

Flat terminal

Self lifting screw	Breaker type	Tightening torque (N•m)	Size
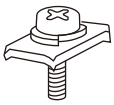	EW32 EW50 EW100*	2.3 to 2.8	M5×14
Pan-head screw	EW63 EW100	5.5 to 7.5	M8×15

* Breaker of rated current : 50A

• 125AF to 250AF

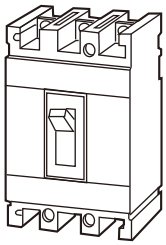

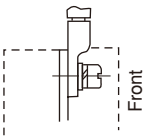

Pan-head screw	Breaker type	Tightening torque (N•m)	Size (mm)
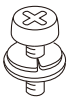	EW125	5.5 to 7.5	M8×16
Hexagonal socket head bolt 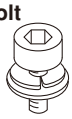	EW160 EW250	8.0 to 13.0	M8×16

• 400AF to 800AF

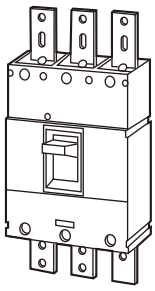

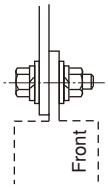

Flat terminal

Hexagonal head bolt	Breaker type	Tightening torque (N•m)	Size (mm)
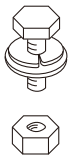	EW400	40 to 50	M12×35
	EW630 EW800	40 to 50	M12×40

Type of connection/up to 250AF
Front mounting front connection

Direct connection

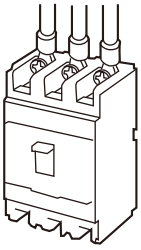

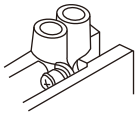

Flat terminal connection
Flat terminals are required.

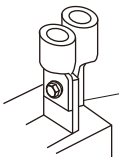

Flat bar studs/1-hole type

Breaker type	Pole	Type of flat terminal
EW32 EW50	2 3	**BZ6S10C502** **BZ6S10C503**
EW63 EW100*	2 3	**BZ6S10C1002** **BZ6S10C1003**
EW125	3 4	**BW9SS0CA-3** **BW9SS0CA-4**
EW160 EW250	3 4	**BW9SS0GA-3** **BW9SS0GA-4**

* EW100 breaker of rated current 50A: BZ6S10C502 or 503.

Earth Leakage Circuit Breakers
G-TWIN series Wire size and terminal

■ Wire size and crimp terminal

The following is the size recommendations for crimp terminals.

Crimp terminal R : JIS C2805
CB : JEM-1399
JST : Product of Japan Crimp Terminal Co., Ltd.

Ampere frame	Breaker	Wire size(mm^2)										
		1.04 | 2.63	2.63 | 6.64	6.64 | 10.52	10.52 | 16.78	16.78 | 26.66	26.66 | 42.42	42.42 | 60.57	96.3 | 117.2	117.2 | 152.05	192.6 | 242.27	242.27 | 325
32	EW32	R2-5	R5.5-5	R8-5	R14-5							
50	EW50	R2-5	R5.5-5	R8-5	R14-5							
63	EW63	R2-8	R5.5-8	R8-8	R14-8	JST22-S8						
100	EW100	R2-8	R5.5-8	R8-8	R14-8	JST22-S8	JST38-S8					
125	EW125	R2-8	R5.5-8	R8-8	R14-8	R22-8	JST38-S8	CB60-8				
160 250	EW160 EW250					R22-8	R38-8	R60-8	CB100-8			
400	EW400						R38-12	R60-12	R100-12	R150-12	R200-12	JST325-12
630	EW630								R100-12	R150-12	R200-12	JST325-12
800	EW800								R100-12	R150-12	R200-12	JST325-12

■ Breaker termination

• Standard

ELCB type	Front connection	Rear connection **X**	Flush mounting **E**	**Y**	Plug-in mounting **P**
EW32 EW50	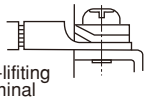 Self-lifiting terminal		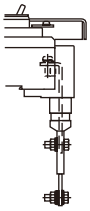	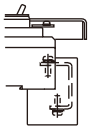	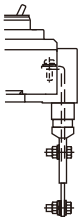
EW63 EW100	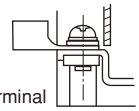 Flat terminal				
EW125		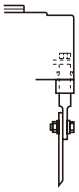 90˚ rotational stud	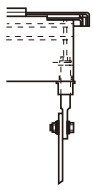 90˚ rotational stud	—	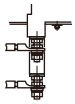
EW160 EW250	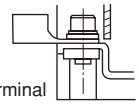 Flat terminal				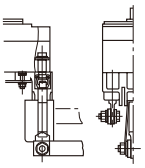 90˚ rotational stud
EW400 EW630 EW800	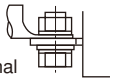 Flat terminal				

Earth Leakage Circuit Breakers
G-TWIN series Wire size and terminal

■ Notes on wiring (global series)

Notes on connecting wires (conductors)

- Connect wires to the UL breaker according to NEC (National Electric Code) or CEC (Canadian Electrical Code) Part 1.
- Use 75°C copper wires for wiring. UL-certified or CSA-certified wires are recommended.
- If a large current (for example, a short-circuit current) flows, it causes a huge electromagnetic force between wires. Therefore, be sure to secure the wires sufficiently.
- Re-tighten terminal screws periodically.

Code	Terminal position Line	Load	Applicable breaker type EW50, 100	EW125, 250	EW400, 630, 800
Blank	Screw	Screw	●	●	–
Blank	Flat teminal	Flat teminal	–	–	●
SB	Block terminal	Block terminal	–	●	●
SF	Flat teminal	Flat teminal	●	●	–
S3	Screw	Flat terminal	●	●	–
S4	Flat teminal	Screw	●	●	–
S5	Screw	Block terminal	–	●	–
S6	Block terminal	Screw	–	●	–
S7	Flat teminal	Block terminal	–	●	●
S8	Block terminal	Flat terminal	–	●	●

Block terminal connection

- Choose from the stranded wires shown in Table.

Wire size: AWG or MCM [mm^2]	No. of wires stranded
14 to 2 [2.1 to 33.6]	7
1 to 4/0 [42.4 to 107.2]	19
250 to 500 [127 to 250]	37

Values in [ ] are those converted from AWG or MCM sizes to mm^2.

* See the instruction manual that comes with the breaker for more details.

Precautions

- Two wires of different sizes cannot be connected to the same block terminal.
- Be sure to use stranded wires according to Table "Number of wires stranded."
- Multi-conductor wires cannot be connected.
- Do not solder wires together.

Wire size and crimp terminal

• Crimp terminal connection

ELCB	Rated current (A)	Applicable crimp terminal 75˚C wire: J.S.T Mfg. Co., Ltd.	Nichifu Co., Ltd.	Daido Solderless Terminal Mfg. Co., Ltd.	Connectable wire size (AWG) 75˚C wire	Tightening torque (N•m)	Type of screw head and size (mm)
EW50RAGU	3	R2-5	R2-5M R2-5	2-S5, 2-5	14AWG	2.3-2.8	Cross/straight slotted pan-head screw M5 x 14
	5						
	10						
	15						
	20	R5.5-5	R3.5-5S, R3.5-5L, 5.5-6N, R5.5-5S, R5.5-5	3.5-5, 5.5-S5, 5.5-5, 5.5-L5	12AWG		
	30				10AWG		
	40	R8-5	R8-5S, R8-5	8-S5, 8-5	8AWG		
	50						
EW100EAGU	60	R14-8	R14-8S, R14-8	R14-S8, R14-8	6AWG	5.5-7.5	Cross/straight slotted pan-head screw M8 x 15
	75	22-S8	R22-8S, R22-8	R22-S8, 22-8	4AWG		
	100	38-S8	R38-8S	38-S8	3AWG		
EW125JAGU EW125RAGU	15	R2-8	R2-8	2-8, 2-B8	14AWG	5.8 (5.3-6.4)	Cross/straight slotted pan-head screw M8 x 16
	20	5.5-S8, R5.5-8	R3.5-8, R5.5-8	3.5-8, 5.5-8	12AWG		
	30		R5.5-8	5.5-8	10AWG		
	40	8-8NS, R8-8	R8-8	8-8	8AWG		
	50						
	60	14-8NS, 14-S8, R14-8	R14-8S, R14-8	14-S8, 14-8	6AWG		
	70	22-S8, R22-8, CB22-S8	R22-8S, R22-8, CB22-8S	22-S8, 22-8, CB22-8	4AWG		
	75						
	80						
	90	38-S8	R38-8S	38-S8	3AWG		
	100						
	125				1AWG		
EW250JAGU EW250RAGU	125	38-S8, R38-8	R38-8S, R38-8	38-S8, 38-8	1AWG	10.5 (8-13)	Hexagon socket head bolt M8 x 16
	150	60-S8, R60-8	R60-8, CB60-8, CB60-8S	60-8, CB60-8	1/0AWG		
	175	70-8	R70-8	70-8	2/0AWG		
	200	CB80-S8		CB80-8	3/0AWG		
	225	CB100-S8		CB100-8	4/0AWG		
	250	CB150-S8	CB150-8	CB150-8	250MCM		

Notes: • AWG/MCM is the UL approved wire unit.
• The allowable temperature of wire is 75˚C. (UL CSA approved)
• Be sure to use UL-certified or CSA-certified crimp tools commercially available.

Earth Leakage Circuit Breakers
G-TWIN series Wire size and terminal

• Flat terminal connection

ELCB	Rated current (A)	Applicable crimp terminal 75˚C wire			Connectable wire size (AWG)	Tightening torque (N•m)		Type of screw head and size (mm)
		J.S.T Mfg. Co., Ltd.	Nichifu Co., Ltd.	Daido Solderless Terminal Mfg. Co., Ltd.	75˚C wire	Wire side	MCCB side	
EW50RAGU	3	R2-5	R2-5M R2-5	2-S5, 2-5	14AWG	3.5 to 4.5	2.3 to 2.8	Hexagon socket head bolt M5 x 16
	5							
	10							
	15							
	20	R5.5-5	R3.5-5S, R3.5-5L, 5.5-6N. R5.5-5S, R5.5-5	3.5-5, 5.5-S5 5.5-5, 5.5-L5	12AWG			
	30				10AWG			
	40	R8-5	R8-5S, R8-5	8-S5, 8-5	8AWG			
	50							
EW100EAGU	60	R14-8	R14-8S, R14-8	R14-S8, R14-8	6AWG	8 to 10	5.5 to 7.5	Hexagon socket head bolt M8 x 22
	75	22-S8	R22-8S, R22-8	R22-S8, 22-8	4AWG			
	100	38-S8	R38-8S	38-S8	3AWG			
EW125JAGU EW125RAGU	15	R2-8	R2-8	2-8, 2-B8	14AWG	9 (8 to 10)	5.8 (5.3 to 6.4)	Cross/straight slotted pan-head screw M8 x 16
	20	5.5-S8, R5.5-8	R3.5-8, R5.5-8	3.5-8, 5.5-8	12AWG			
	30		R5.5-8	5.5-8	10AWG			
	40	8-8NS, R8-8	R8-8	8-8	8AWG			
	50							
	60	14-8NS, 14-S8, R14-8	R14-8S, R14-8	14-S8, 14-8	6AWG			
	75	22-S8, R22-8, CB22-S8	R22-8S, R22-8, CB22-8S	22-S8, 22-8, CB22-8	4AWG			
	100	38-S8	R38-8S	38-S8	3AWG			
	125				1AWG			
EW250JAGU EW250RAGU	125	38-S8, R38-8	R38-8S, R38-8	38-S8, 38-8	1AWG	9 (8 to 10)	10.5 (8 to 13)	Hexagon socket head bolt M8 x 16
	150	60-S8, R60-8	R60-8, CB60-8, CB60-8S	60-8, CB60-8	1/0AWG			
	175	70-8	R70-8	70-8	2/0AWG			
	200	CB80-S8		CB80-8	3/0AWG			
	225	CB100-S8		CB100-8	4/0AWG			
	250	CB150-S8	CB150-8	CB150-8	250MCM			
EW400SAGU EW400RAGU EW400HAGU	250	150-12	R150-12		250MCM	45 (40 to 50)	43.5 (39.2 to 48)	Hexagon head bolt M12 x 35
	300	180-12	R180-12		350MCM			
	350	325-12	R325-12N		500MCM			
	400	325-12	R325-12N		500MCM			
		R80-12	R80-12		3/0AWG(x2)			
EW630RAGU	500	R150-12		R150-12	250MCM(x2)	47.04 (42.4 to 51.7)	47.04 (42.4 to 51.7)	Hexagon head bolt M12 x 40
	600	180-12		R180-12	350MCM(x2)			
	630	325-12	R325-12N	R325-12 □	500MCM(x2)			

Notes: • AWG/MCM is the UL approved wire unit.
• The allowable temperature of wire is 75˚C. (UL CSA approved)

Earth Leakage Circuit Breakers
G-TWIN series Wire size and terminal

• Block terminal connection

ELCB	Rated current (A)	Connectable wire size (AWG)	Tightening torque (N•m)	Type of screw head and size (mm)	Figure
EW125JAGU EW125RAGU	15	14AWG	5.8 (5.8 to 6.4)	Slotted set screw	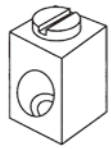
	20	12AWG			
	30	10AWG			
	40	8AWG			
	50				
	60	6AWG			
	75	4AWG			
	100	3AWG			
	125	1AWG			
EW250JAGU EW250RAGU	125	1AWG	23 (23 to 25.3)	Hexagon socket head setscrew: 8 mm (5/16 inch)	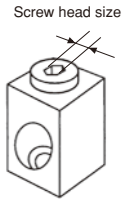
	150	1/0AWG			
	175	2/0AWG			
	200	3/0AWG			
	225	4/0AWG			
	250	250MCM			
EW400SAGU EW400RAGU EW400HAGU	250	250MCM	43.5 (43.5 to 48)	Hexagon socket head setscrew: 9.53 mm (3/8 inch)	
	300	350MCM			
	350	500MCM			
	400	3/0AWG(x2)	31.9 (31.9 to 35.1)	Hexagon socket head setscrew: 8 mm (5/16 inch)	
EW630RAGU	500	250MCM(x2)	31.1 (31.1 to 34.2)	Hexagon socket head setscrew: 8 mm (5/16 inch)	
	600	350MCM(x2)			

Notes: • AWG/MCM is the UL approved wire unit.
• The allowable temperature of wire is 75˚C. (UL CSA approved)

Earth Leakage Circuit Breakers
G-TWIN series Type number/Line protection

■ Type number, Standard series (Line protection)

● AAG series, 2-pole IEC/EN/GB/JIS conformed

Breaker ampere frame	Rated current (A)	Type	■: Rated sensitive current	□: Available mounting and connection
32	5	EW32AAG-2P005■□	A, B, C	Blank, X, E, Y, P
	10	EW32AAG-2P010■□		
	15	EW32AAG-2P015■□		
	20	EW32AAG-2P020■□		
	30	EW32AAG-2P030■□		
	32	EW32AAG-2P032■□		
50	5	EW50AAG-2P005■□	A, B, C	Blank, X, E, Y, P
	10	EW50AAG-2P010■□		
	15	EW50AAG-2P015■□		
	20	EW50AAG-2P020■□		
	30	EW50AAG-2P030■□		
	32	EW50AAG-2P032■□		
	40	EW50AAG-2P040■□		
	50	EW50AAG-2P050■□		

● EAG series, 2-pole IEC/EN/GB/JIS conformed

Breaker ampere frame	Rated current (A)	Type	■: Rated sensitive current	□: Available mounting and connection
100	50	EW100EAG-2P050■□	B, K	Blank, X, E, Y, P
	60	EW100EAG-2P060■□		
	63	EW100EAG-2P063■□		
	75	EW100EAG-2P075■□		
	100	EW100EAG-2P100■□		

● AAG series, 3-pole IEC/EN/GB/JIS conformed

Breaker ampere frame	Rated current (A)	Type	■: Rated sensitive current	□: Available mounting and connection
32	5	EW32AAG-3P005■□	A, B, C	Blank, X, E, Y, P
	10	EW32AAG-3P010■□		
	15	EW32AAG-3P015■□		
	20	EW32AAG-3P020■□		
	30	EW32AAG-3P030■□		
	32	EW32AAG-3P032■□		
50	5	EW50AAG-3P005■□	A, B, C	Blank, X, E, Y, P
	10	EW50AAG-3P010■□		
	15	EW50AAG-3P015■□		
	20	EW50AAG-3P020■□		
	30	EW50AAG-3P030■□		
	32	EW50AAG-3P032■□		
	40	EW50AAG-3P040■□		
	50	EW50AAG-3P050■□		
100	60	EW100AAG-3P060■□	B, K	Blank, X, E, Y, P
	63	EW100AAG-3P063■□		
	75	EW100AAG-3P075■□		
	100	EW100AAG-3P100■□		

● JAG series, 3-pole IEC/EN/GB/JIS conformed

Breaker ampere frame	Rated current (A)	Type	■: Rated sensitive current	□: Available mounting and connection
125	15	EW125JAG-3P015■□	B, J	Blank, X, E, P
	20	EW125JAG-3P020■□		
	30	EW125JAG-3P030■□		
	40	EW125JAG-3P040■□		
	50	EW125JAG-3P050■□		
	60	EW125JAG-3P060■□		
	75	EW125JAG-3P075■□		
	100	EW125JAG-3P100■□		
	125	EW125JAG-3P125■□		
160	125	EW160JAG-3P125■□	B, J	Blank, X, E, P
	150	EW160JAG-3P150■□		
	160	EW160JAG-3P160■□		
250	175	EW250JAG-3P175■□	B, J	Blank, X, E, P
	200	EW250JAG-3P200■□		
	225	EW250JAG-3P225■□		
	250	EW250JAG-3P250■□		

Mounting	Connection	□
Front	Front	Blank
Front	Rear	X
Flush	Rear	E
Flush	Top and bottom	Y
Plug-in		P

Rated sensitive current	■
15mA	A
30mA	B
100mA	C
50mA	D
100/300/500/1000mA changeover	J
100/200mA, 100/200/500mA changeover	K
100/200/500/1000mA changeover	K

Earth Leakage Circuit Breakers
G-TWIN series Type number/Line protection

● EAG series, 3-pole IEC/EN/GB/JIS conformed

Breaker ampere frame	Rated current (A)	Type	■: Rated sensitive current *	□: Available mounting and connection *
32	5	EW32EAG-3P005■□	A, B, C	Blank, X, E, Y, P
	10	EW32EAG-3P010■□		
	15	EW32EAG-3P015■□		
	20	EW32EAG-3P020■□		
	30	EW32EAG-3P030■□		
	32	EW32EAG-3P032■□		
50	5	EW50EAG-3P005■□	A, B, K	Blank, X, E, Y, P
	10	EW50EAG-3P010■□		
	15	EW50EAG-3P015■□		
	20	EW50EAG-3P020■□		
	30	EW50EAG-3P030■□		
	32	EW50EAG-3P032■□		
	40	EW50EAG-3P040■□		
	50	EW50EAG-3P050■□		
63	60	EW63EAG-3P060■□	A, B, K	Blank, X, E, Y, P
	63	EW63EAG-3P063■□		
100	50	EW100EAG-3P050■□	B, K	Blank, X, E, Y, P
	60	EW100EAG-3P060■□		
	63	EW100EAG-3P063■□		
	75	EW100EAG-3P075■□		
	100	EW100EAG-3P100■□		
160	125	EW160EAG-3P125■□	B, J	Blank, X, E, P
	150	EW160EAG-3P150■□		
	160	EW160EAG-3P160■□		
250	175	EW250EAG-3P175■□	B, J	Blank, X, E, P
	200	EW250EAG-3P200■□		
	225	EW250EAG-3P225■□		
	250	EW250EAG-3P250■□		
400	250	EW400EAG-3P250■□	B, J	Blank, X, E, P
	300	EW400EAG-3P300■□		
	350	EW400EAG-3P350■□		
	400	EW400EAG-3P400■□		
630	500	EW630EAG-3P500■□	J	Blank, X, E, P
	600	EW630EAG-3P600■□		
	630	EW630EAG-3P630■□		
800	700	EW800EAG-3P700■□	J	Blank, X, E, P
	800	EW800EAG-3P800■□		

● SAG series, 3-pole IEC/EN/GB/JIS conformed

Breaker ampere frame	Rated current (A)	Type	■: Rated sensitive current *	□: Available mounting and connection *
32	3	EW32SAG-3P003■□	B, K	Blank, X, E, Y, P
	5	EW32SAG-3P005■□		
	10	EW32SAG-3P010■□		
	15	EW32SAG-3P015■□		
	20	EW32SAG-3P020■□		
	30	EW32SAG-3P030■□		
	32	EW32SAG-3P032■□		
50	5	EW50SAG-3P005■□	B, K	Blank, X, E, Y, P
	10	EW50SAG-3P010■□		
	15	EW50SAG-3P015■□		
	20	EW50SAG-3P020■□		
	30	EW50SAG-3P030■□		
	32	EW50SAG-3P032■□		
	40	EW50SAG-3P040■□		
	50	EW50SAG-3P050■□		
63	60	EW63SAG-3P060■□	B, K	Blank, X, E, Y, P
	63	EW63SAG-3P063■□		
125	15	EW125SAG-3P015■□	B, J	Blank, X, E, P
	20	EW125SAG-3P020■□		
	30	EW125SAG-3P030■□		
	40	EW125SAG-3P040■□		
	50	EW125SAG-3P050■□		
	60	EW125SAG-3P060■□		
	75	EW125SAG-3P075■□		
	100	EW125SAG-3P100■□		
	125	EW125SAG-3P125■□		
160	125	EW160SAG-3P125■□	B, J	Blank, X, E, P
	150	EW160SAG-3P150■□		
	160	EW160SAG-3P160■□		
250	175	EW250SAG-3P175■□	B, J	Blank, X, E, P
	200	EW250SAG-3P200■□		
	225	EW250SAG-3P225■□		
	250	EW250SAG-3P250■□		
400	250	EW400SAG-3P250■□	B, J	Blank, X, E, P
	300	EW400SAG-3P300■□		
	350	EW400SAG-3P350■□		
	400	EW400SAG-3P400■□		

* See page B1-121.

Earth Leakage Circuit Breakers
G-TWIN series Type number/Line protection

● RAG series, 3-pole IEC/EN/GB/JIS conformed

Breaker ampere frame	Rated current (A)	Type	■: Rated sensitive current *	□: Available mounting and connection *
50	10	EW50RAG-3P010■□	B, K	Blank, X, E, Y, P
	15	EW50RAG-3P015■□		
	20	EW50RAG-3P020■□		
	30	EW50RAG-3P030■□		
	32	EW50RAG-3P032■□		
	40	EW50RAG-3P040■□		
	50	EW50RAG-3P050■□		
63	60	EW63RAG-3P060■□	B, K	Blank, X, E, Y, P
	63	EW63RAG-3P063■□		
125	15	EW125RAG-3P015■□	B, J	Blank, X, E, P
	20	EW125RAG-3P020■□		
	30	EW125RAG-3P030■□		
	40	EW125RAG-3P040■□		
	50	EW125RAG-3P050■□		
	60	EW125RAG-3P060■□		
	75	EW125RAG-3P075■□		
	100	EW125RAG-3P100■□		
	125	EW125RAG-3P125■□		
160	125	EW160RAG-3P125■□	B, J	Blank, X, E, P
	150	EW160RAG-3P150■□		
	160	EW160RAG-3P160■□		
250	175	EW250RAG-3P175■□	B, J	Blank, X, E, P
	200	EW250RAG-3P200■□		
	225	EW250RAG-3P225■□		
	250	EW250RAG-3P250■□		
400	250	EW400RAG-3P250■□	B, J	Blank, X, E, P
	300	EW400RAG-3P300■□		
	350	EW400RAG-3P350■□		
	400	EW400RAG-3P400■□		
630	500	EW630RAG-3P500■□	J	Blank, X, E, P
	600	EW630RAG-3P600■□		
	630	EW630RAG-3P630■□		
800	700	EW800RAG-3P700■□	J	Blank, X, E, P
	800	EW800RAG-3P800■□		

● HAG series, 3-pole IEC/EN/GB/JIS conformed

Breaker ampere frame	Rated current (A)	Type	■: Rated sensitive current *	□: Available mounting and connection *
400	250	EW400HAG-3P250■□	B, J	Blank, X, E, P
	300	EW400HAG-3P300■□		
	350	EW400HAG-3P350■□		
	400	EW400HAG-3P400■□		
630	500	EW630HAG-3P500■□	J	Blank, X, E, P
	600	EW630HAG-3P600■□		
	630	EW630HAG-3P630■□		
800	700	EW800HAG-3P700■□	J	Blank, X, E, P
	800	EW800HAG-3P800■□		

● JAG series, 4-pole IEC/EN/GB/JIS conformed

Breaker ampere frame	Rated current (A)	Type	■: Rated sensitive current *	□: Available mounting and connection *
125	15	EW125JAG-4P015■□	B, J	Blank, X, E
	20	EW125JAG-4P020■□		
	30	EW125JAG-4P030■□		
	40	EW125JAG-4P040■□		
	50	EW125JAG-4P050■□		
	60	EW125JAG-4P060■□		
	75	EW125JAG-4P075■□		
	100	EW125JAG-4P100■□		
	125	EW125JAG-4P125■□		
160	125	EW160JAG-4P125■□	B, J	Blank, X, E
	150	EW160JAG-4P150■□		
	160	EW160JAG-4P160■□		
250	175	EW250JAG-4P175■□	B, J	Blank, X, E
	200	EW250JAG-4P200■□		
	225	EW250JAG-4P225■□		
	250	EW250JAG-4P250■□		

● SAG series, 4-pole IEC/EN/GB/JIS conformed

Breaker ampere frame	Rated current (A)	Type	■: Rated sensitive current *	□: Available mounting and connection *
125	15	EW125SAG-4P015■□	B, J	Blank, X, E
	20	EW125SAG-4P020■□		
	30	EW125SAG-4P030■□		
	40	EW125SAG-4P040■□		
	50	EW125SAG-4P050■□		
	60	EW125SAG-4P060■□		
	75	EW125SAG-4P075■□		
	100	EW125SAG-4P100■□		
	125	EW125SAG-4P125■□		
160	125	EW160SAG-4P125■□	B, J	Blank, X, E
	150	EW160SAG-4P150■□		
	160	EW160SAG-4P160■□		
250	175	EW250SAG-4P175■□	B, J	Blank, X, E
	200	EW250SAG-4P200■□		
	225	EW250SAG-4P225■□		

* See page B1-121.

Earth Leakage Circuit Breakers
G-TWIN series Type number/Line protection

● RAG series, 4-pole IEC/EN/GB/JIS conformed

Breaker ampere frame	Rated current (A)	Type	■: Rated sensitive current *	□: Available mounting and connection *
125	15	EW125RAG-4P015■□	B, J	Blank, X, E
	20	EW125RAG-4P020■□		
	30	EW125RAG-4P030■□		
	40	EW125RAG-4P040■□		
	50	EW125RAG-4P050■□		
	60	EW125RAG-4P060■□		
	75	EW125RAG-4P075■□		
	100	EW125RAG-4P100■□		
	125	EW125RAG-4P125■□		
160	125	EW160RAG-4P125■□	B, J	Blank, X, E
	150	EW160RAG-4P150■□		
	160	EW160RAG-4P160■□		
250	175	EW250RAG-4P175■□	B, J	Blank, X, E
	200	EW250RAG-4P200■□		
	225	EW250RAG-4P225■□		
400	250	EW400RAG-4P250■□	B, J	Blank, X, E
	300	EW400RAG-4P300■□		
	350	EW400RAG-4P350■□		
	400	EW400RAG-4P400■□		

● HAG series, 4-pole IEC/EN/GB/JIS conformed

Breaker ampere frame	Rated current (A)	Type	■: Rated sensitive current *	□: Available mounting and connection*
400	250	EW400HAG-4P250■□	B, J	Blank, X, E
	300	EW400HAG-4P300■□		
	350	EW400HAG-4P350■□		
	400	EW400HAG-4P400■□		

* See page B1-121.

Earth Leakage Circuit Breakers
G-TWIN series Type number/Line protection

■ Type number, Global series (Line protection)

● EAGU series, 2-pole UL489 Listed

Breaker ampere frame	Rated current (A)	Type	■: Rated sensitive current *	□: Available mounting and connection
100	60	EW100EAGU-2P060■□	B, K	Blank, SF, S3, S4
	63	EW100EAGU-2P063■□		
	70	EW100EAGU-2P070■□		
	75	EW100EAGU-2P075■□		
	80	EW100EAGU-2P080■□		
	90	EW100EAGU-2P090■□		
	100	EW100EAGU-2P100■□		

● EAGU series, 3-pole UL489 Listed

Breaker ampere frame	Rated current (A)	Type	■: Rated sensitive current *	□: Available mounting and connection
100	60	EW100EAGU-3P060■□	B,D, K	Blank, SF, S3, S4
	63	EW100EAGU-3P063■□		
	70	EW100EAGU-3P070■□		
	75	EW100EAGU-3P075■□		
	80	EW100EAGU-3P080■□		
	90	EW100EAGU-3P090■□		
	100	EW100EAGU-3P100■□		

● JAGU series, 3-pole UL489 Listed

Breaker ampere frame	Rated current (A)	Type	■: Rated sensitive current *	□: Available mounting and connection
125	15	EW125JAGU-3P015■□	B, K	Blank, SB, SF, S3 S4, S5, S6, S7, S8
	20	EW125JAGU-3P020■□		
	30	EW125JAGU-3P030■□		
	40	EW125JAGU-3P040■□		
	50	EW125JAGU-3P050■□		
	60	EW125JAGU-3P060■□		
	75	EW125JAGU-3P075■□		
	100	EW125JAGU-3P100■□		
	125	EW125JAGU-3P125■□		
250	125	EW250JAGU-3P125■□	B, K	Blank, SB, SF, S3 S4, S5, S6, S7, S8
	150	EW250JAGU-3P150■□		
	160	EW250JAGU-3P160■□		
	175	EW250JAGU-3P175■□		
	200	EW250JAGU-3P200■□		
	225	EW250JAGU-3P225■□		
	250	EW250JAGU-3P250■□		

● SAGU series, 3-pole UL489 Listed

Breaker ampere frame	Rated current (A)	Type	■: Rated sensitive current *	□: Available mounting and connection
400	250	EW400SAGU-3P250■□	B, K	Blank, SB, S7, S8
	300	EW400SAGU-3P300■□		
	350	EW400SAGU-3P350■□		
	400	EW400SAGU-3P400■□		

● RAGU series, 3-pole UL489 Listed

Breaker ampere frame	Rated current (A)	Type	■: Rated sensitive current *	□: Available mounting and connection
50	3	EW50RAGU-3P003■□	B, D, K	Blank, SF, S3, S4
	5	EW50RAGU-3P005■□		
	10	EW50RAGU-3P010■□		
	15	EW50RAGU-3P015■□		
	20	EW50RAGU-3P020■□		
	30	EW50RAGU-3P030■□		
	32	EW50RAGU-3P032■□		
	40	EW50RAGU-3P040■□		
	50	EW50RAGU-3P050■□		
125	15	EW125RAGU-3P015■□	B, K	Blank, SB, SF, S3 S4, S5, S6, S7, S8
	20	EW125RAGU-3P020■□		
	30	EW125RAGU-3P030■□		
	40	EW125RAGU-3P040■□		
	50	EW125RAGU-3P050■□		
	60	EW125RAGU-3P060■□		
	75	EW125RAGU-3P075■□		
	100	EW125RAGU-3P100■□		
	125	EW125RAGU-3P125■□		
250	125	EW250RAGU-3P125■□	B, K	Blank, SB, SF, S3 S4, S5, S6, S7, S8
	150	EW250RAGU-3P150■□		
	160	EW250RAGU-3P160■□		
	175	EW250RAGU-3P175■□		
	200	EW250RAGU-3P200■□		
	225	EW250RAGU-3P225■□		
	250	EW250RAGU-3P250■□		
400	250	EW400RAGU-3P250■□	B, K	Blank, SB, S7, S8
	300	EW400RAGU-3P300■□		
	350	EW400RAGU-3P350■□		
	400	EW400RAGU-3P400■□		
630	500	EW630RAGU-3P500■□	K	Blank, SB, S7, S8
	600	EW630RAGU-3P600■□		
	630	EW630RAGU-3P630■□		

● HAGU series, 3-pole UL489 Listed

Breaker ampere frame	Rated current (A)	Type	■: Rated sensitive current *	□: Available mounting and connection
400	250	EW400HAGU-3P250■□	B, K	Blank, SB, S7, S8
	300	EW400HAGU-3P300■□		
	350	EW400HAGU-3P350■□		
	400	EW400HAGU-3P400■□		

Terminal combination

□:	Terminal position		Breaker type		
Code	Line	Load	EW50, 100	EW125,250	EW400,630
Blank	Screw	Screw	●	●	–
Blank	Flat terminal	Flat terminal	–	–	●
SB	Block terminal	Block terminal	–	●	●
SF	Flat terminal	Flat terminal	●	●	–
S3	Screw	Flat terminal	●	●	–
S4	Flat terminal	Screw	●	●	–
S5	Screw	Block terminal	–	●	–
S6	Block terminal	Screw	–	●	–
S7	Flat terminal	Block terminal	–	●	●
S8	Block terminal	Flat terminal	–	●	●

* See page B1-121.

Earth Leakage Circuit Breakers
G-TWIN series Type number/Motor protection

■ Type number, Standard series (Motor protection)

● EAM series, 3-pole IEC/EN/GB/JIS conformed

Breaker ampere frame	Rated current (A)	Type	■: Rated sensitive current	□: Available mounting and connection
32	1.4	EW32EAM-3P1P4■□	B, C	Blank, X, E, Y, P
	2.6	EW32EAM-3P2P6■□		
	4	EW32EAM-3P004■□		
	5	EW32EAM-3P005■□		
	8	EW32EAM-3P008■□		
	10	EW32EAM-3P010■□		
	16	EW32EAM-3P016■□		
	24	EW32EAM-3P024■□		
	32	EW32EAM-3P032■□		
50	45	EW50EAM-3P045■□	B,K	Blank, X, E, Y, P
63	63	EW63EAM-3P063■□	B,K	Blank, X, E, Y, P
100	63	EW100EAM-3P063■□	B,K	Blank, X, E, Y, P
	75	EW100EAM-3P075■□		
	90	EW100EAM-3P090■□		
	100	EW100EAM-3P100■□		
250	125	EW250EAM-3P125■□	B,K	Blank, X, E, P
	150	EW250EAM-3P150■□		
	175	EW250EAM-3P175■□		
	225	EW250EAM-3P225■□		

● JAM series, 3-pole IEC/EN/GB/JIS conformed

Breaker ampere frame	Rated current (A)	Type	■: Rated sensitive current	□: Available mounting and connection
125	75	EW125JAM-3P075■□	B,K	Blank, X, E, P
	90	EW125JAM-3P090■□		
250	125	EW250JAM-3P125■□	B,K	Blank, X, E, P
	150	EW250JAM-3P150■□		
	175	EW250JAM-3P175■□		
	225	EW250JAM-3P225■□		

● SAM series, 3-pole IEC/EN/GB/JIS conformed

Breaker ampere frame	Rated current (A)	Type	■: Rated sensitive current	□: Available mounting and connection
32	0.7	EW32SAM-3P0P7■□	B,K	Blank, X, E, Y, P
	1.4	EW32SAM-3P1P4■□		
	2	EW32SAM-3P002■□		
	2.6	EW32SAM-3P2P6■□		
	4	EW32SAM-3P004■□		
	5	EW32SAM-3P005■□		
	8	EW32SAM-3P008■□		
	10	EW32SAM-3P010■□		
	12	EW32SAM-3P012■□		
	16	EW32SAM-3P016■□		
	24	EW32SAM-3P024■□		
	32	EW32SAM-3P032■□		
50	0.7	EW50SAM-3P0P7■□	B,K	Blank, X, E, Y, P
	1.4	EW50SAM-3P1P4■□		
	2	EW50SAM-3P002■□		
	2.6	EW50SAM-3P2P6■□		
	4	EW50SAM-3P004■□		
	5	EW50SAM-3P005■□		
	8	EW50SAM-3P008■□		
	10	EW50SAM-3P010■□		
	12	EW50SAM-3P012■□		
	16	EW50SAM-3P016■□		
	24	EW50SAM-3P024■□		
	32	EW50SAM-3P032■□		
	40	EW50SAM-3P040■□		
	45	EW50SAM-3P045■□		
63	63	EW63SAM-3P063■□	B,K	Blank, X, E, Y, P

● RAM series, 3-pole IEC/EN/GB/JIS conformed

Breaker ampere frame	Rated current (A)	Type	■: Rated sensitive current	□: Available mounting and connection
125	45	EW125RAM-3P045■□	B,K	Blank, X, E, P
	60	EW125RAM-3P060■□		
	75	EW125RAM-3P075■□		
	90	EW125RAM-3P090■□		
250	125	EW250RAM-3P125■□	B,K	Blank, X, E, P
	150	EW250RAM-3P150■□		
	175	EW250RAM-3P175■□		
	225	EW250RAM-3P225■□		

* See page B1-121.

■ Arc space, mm

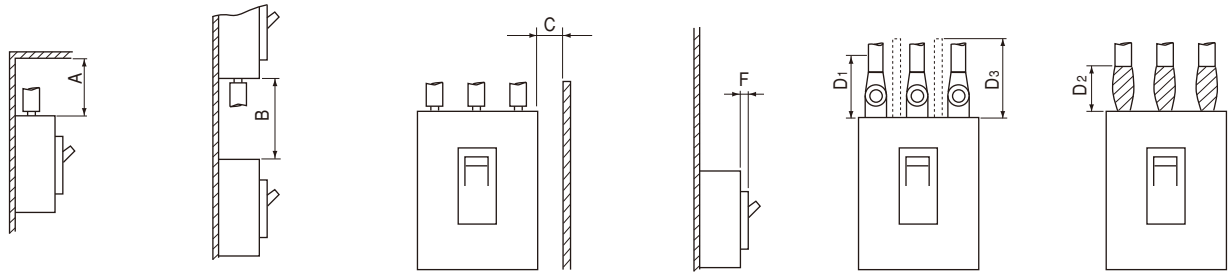

Frame size	ELCB basic type	Ceiling distance A		Vertical distance B		Side plate distance C		Front plate distance Painted F		Front plate distance No painted F		Taping Crimp type terminal lug D1	Taping Bus-bar D2	Barrier D3
		440V	230V	440V	230V	440V	230V	440V	230V	440V	230V			
32A	EW32A	–	10	–	10	–	10	–	0	–	0	Exposed live part dimension +20	10	10
	EW32E	10	10	30	10	20	15	0	0	0	0		30	30
	EW32S	10	10	30	30	20	15	0	0	0	0		30	30
50A	EW50A	–	10	–	10	–	10	–	0	–	0		10	10
	EW50E	10	10	30	30	25	15	0	0	0	0		30	30
	EW50S	30	10	40	40	25	15	0	0	0	0		30	30
	EW50R	50	25	50	50	25	15	0	0	10	5		50	50
63A	EW63E	10	10	30	30	25	15	0	0	0	0		30	30
	EW63S	30	10	40	40	25	15	0	0	0	0		30	30
	EW63R	50	25	50	50	25	15	0	0	10	5		50	50
100A	EW100A	–	10	–	20	–	15	–	0	–	0		50	50
	EW100E	50	25	50	50	25	15	0	0	10	5		50	50
125A	EW125J	40	40	50	50	25	20	0	0	10	5		50	50
	EW125S	40	40	60	60	25	20	5	0	10	5		50	50
	EW125R	40	40	60	60	25	20	5	0	10	5		50	50
160A	EW160E	40	40	50	50	50	15	0	0	10	5		80	80
	EW160J	40	40	60	60	50	20	0	0	10	5		80	80
	EW160S	40	40	80	80	50	20	5	0	10	10		80	80
	EW160R	40	40	80	80	50	20	5	0	10	10		80	80
250A	EW250E	40	40	50	50	50	15	0	0	10	5		80	80
	EW250J	40	40	60	60	50	20	0	0	10	5		80	80
	EW250S	40	40	80	80	50	20	5	0	10	10		80	80
	EW250R	40	40	80	80	50	20	5	0	10	10		80	80
400A	EW400E	100	80	100	80	50	20	0	0	10	5		100	100
	EW400S	100	80	100	80	50	20	0	0	10	5		100	100
	EW400R	100	80	100	80	80	40	5	0	20	10		100	100
	EW400H	100	80	100	80	80	40	5	0	20	10		100	100
630A	EW630E	100	80	100	80	80	40	0	0	10	5		100	100
	EW630R	100	80	100	80	80	40	5	0	20	10		100	100
	EW630H	120	100	120	100	80	40	5	0	20	10		120	120
800A	EW800E	100	80	100	80	80	40	0	0	10	5		100	100
	EW800R	100	80	100	80	80	40	5	0	20	10		100	100
	EW800H	120	100	120	100	80	40	5	0	20	20		120	120

Earth Leakage Circuit Breakers
G-TWIN series Dimensions / Standard

■ Dimensions, mm

● Front mounting, front connection

EW32□-2P, EW50□-2P

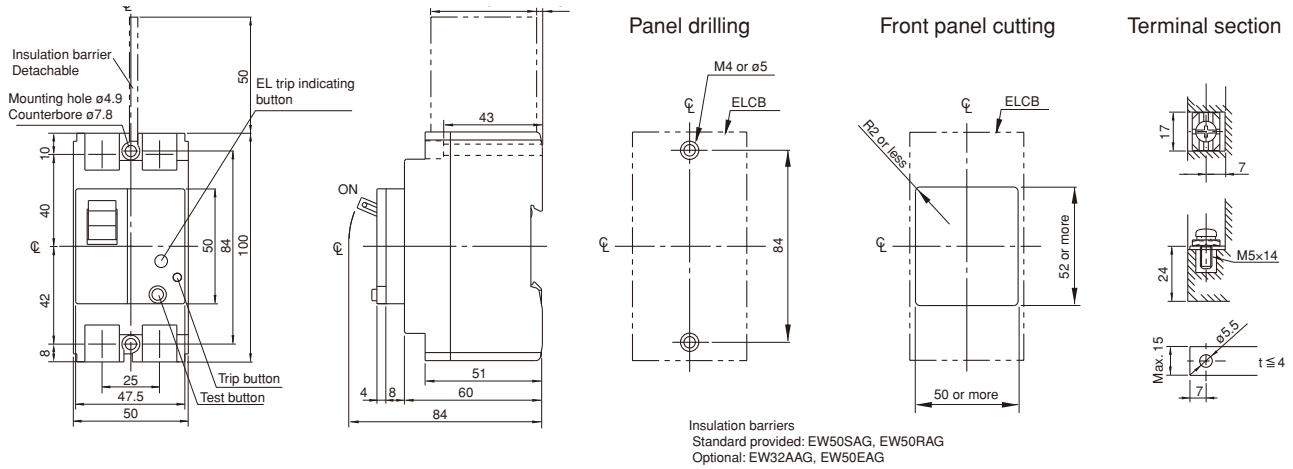

EW32□-3P, EW50□-3P

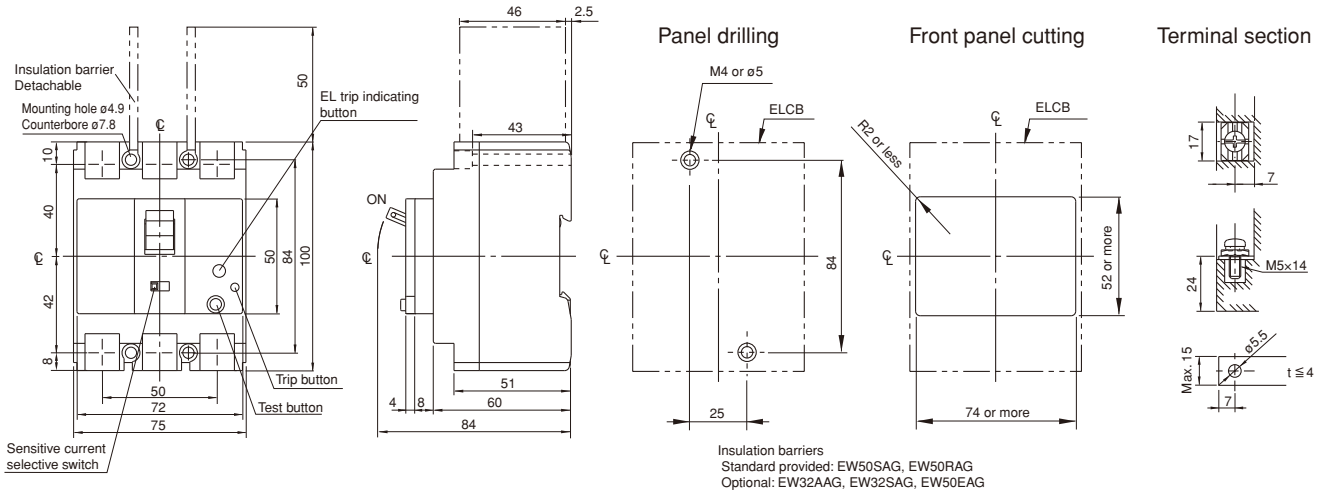

EW63□-3P

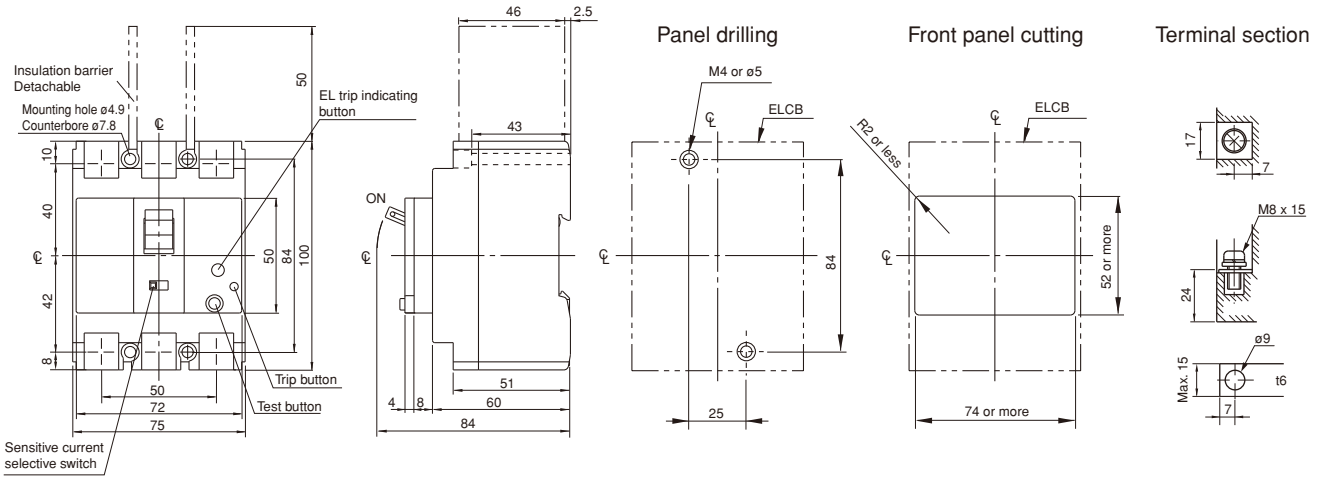

Fuji Electric FA Components & Systems Co., Ltd.
Information subject to change without notice

■ Dimensions, mm

● Front mounting, front connection

EW100□-2P, 3P

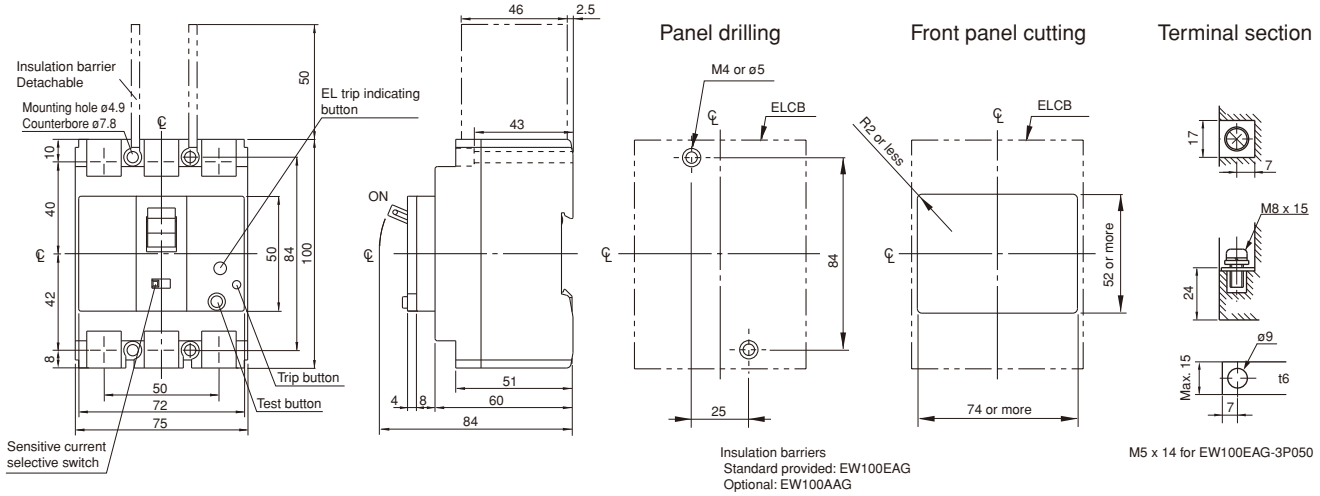

EW125□-3P

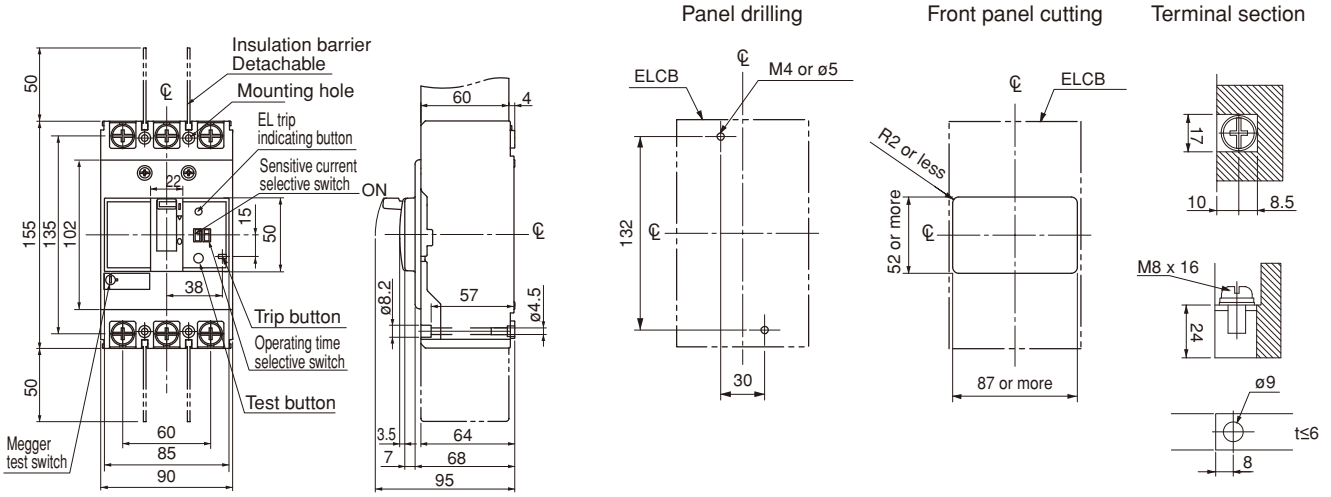

Earth Leakage Circuit Breakers
G-TWIN series Dimensions / Standard

■ Dimensions, mm

● Front mounting, front connection

EW125□-4P

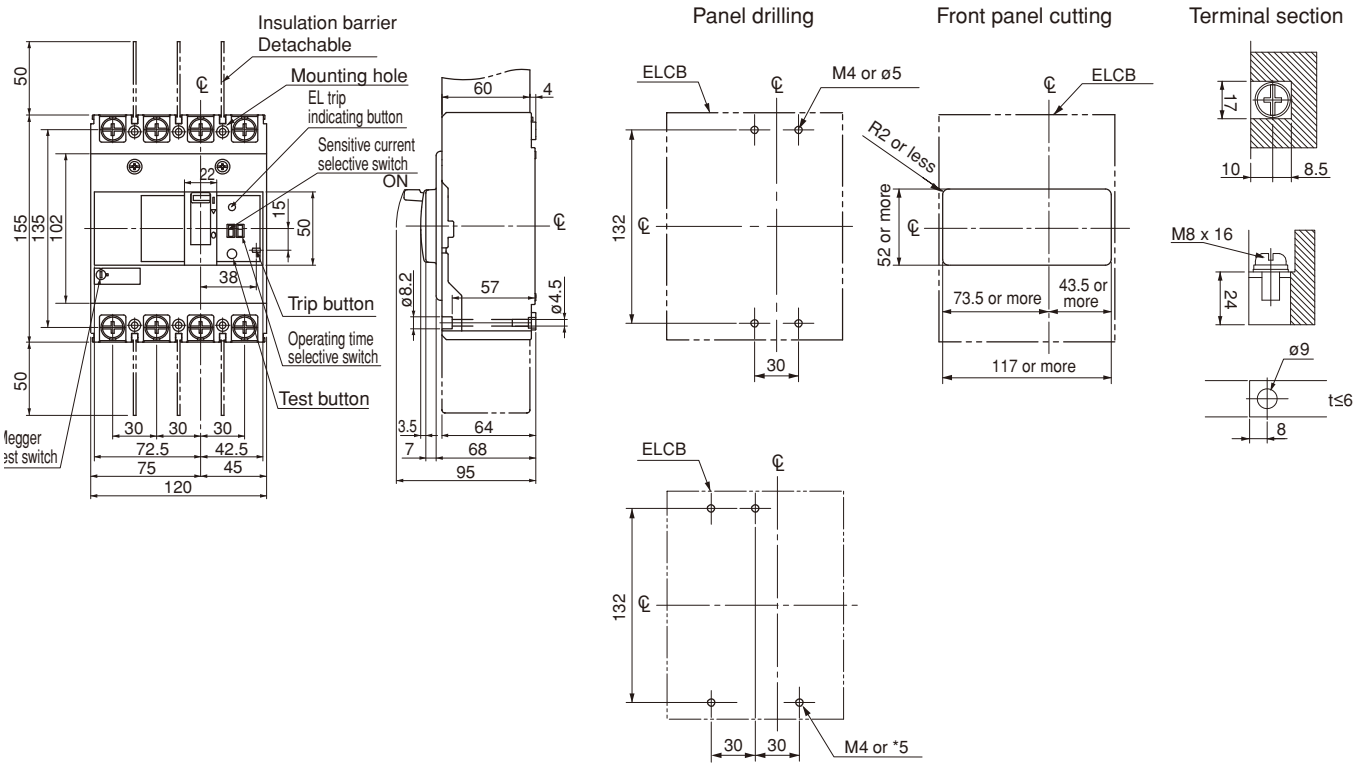

For N, V type handle

Information subject to change without notice

■ Dimensions, mm

● Front mounting, front connection

EW160□-3P
EW250□-3P

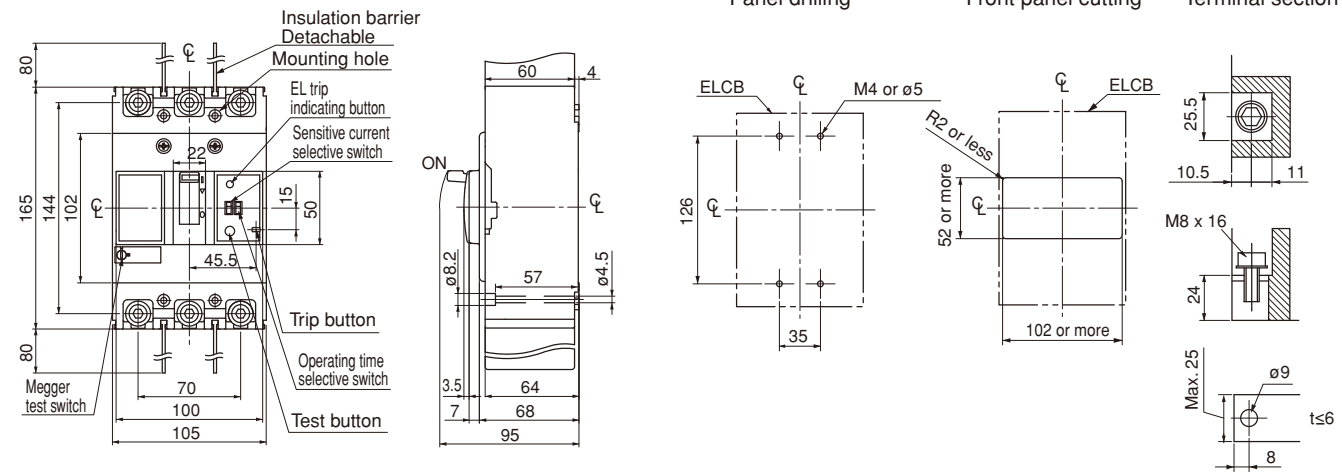

EW160□-4P
EW250□-4P

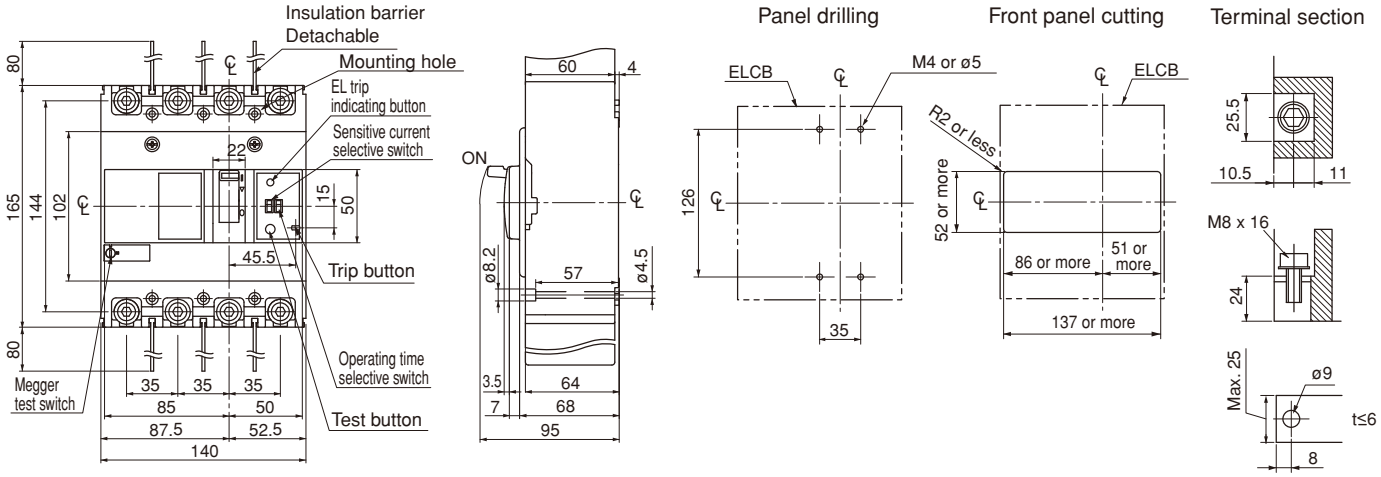

Earth Leakage Circuit Breakers
G-TWIN series Dimensions / Standard

■ Dimensions, mm

● Front mounting, front connection

EW400□-3P

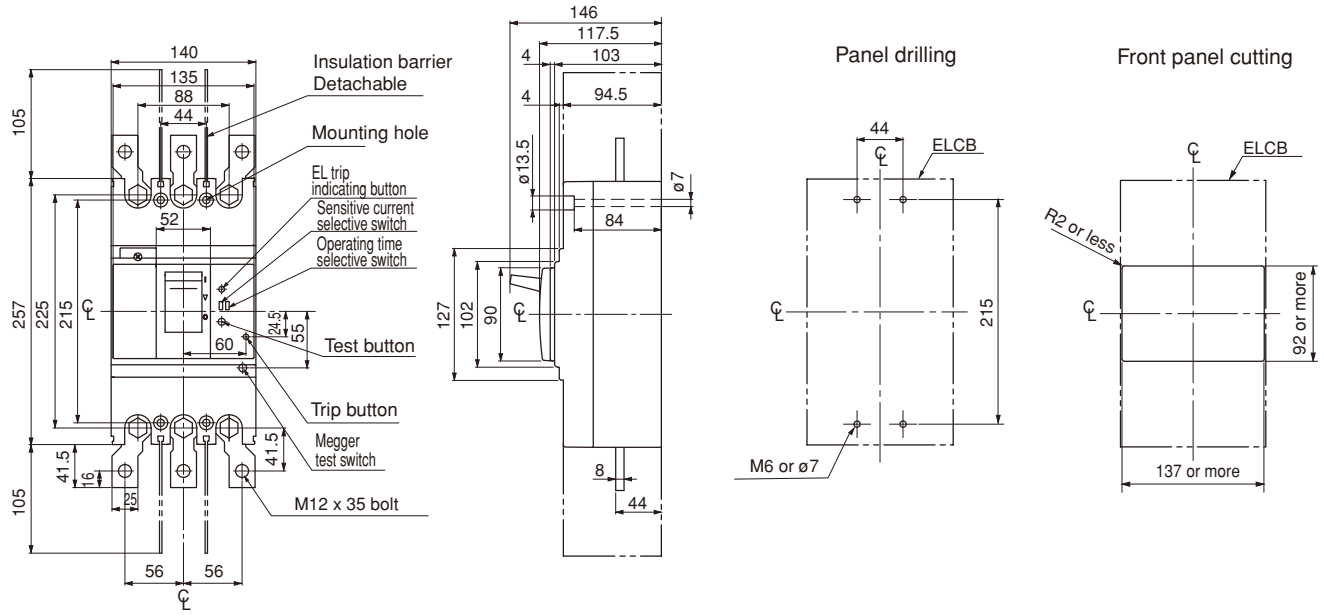

EW400□-4P

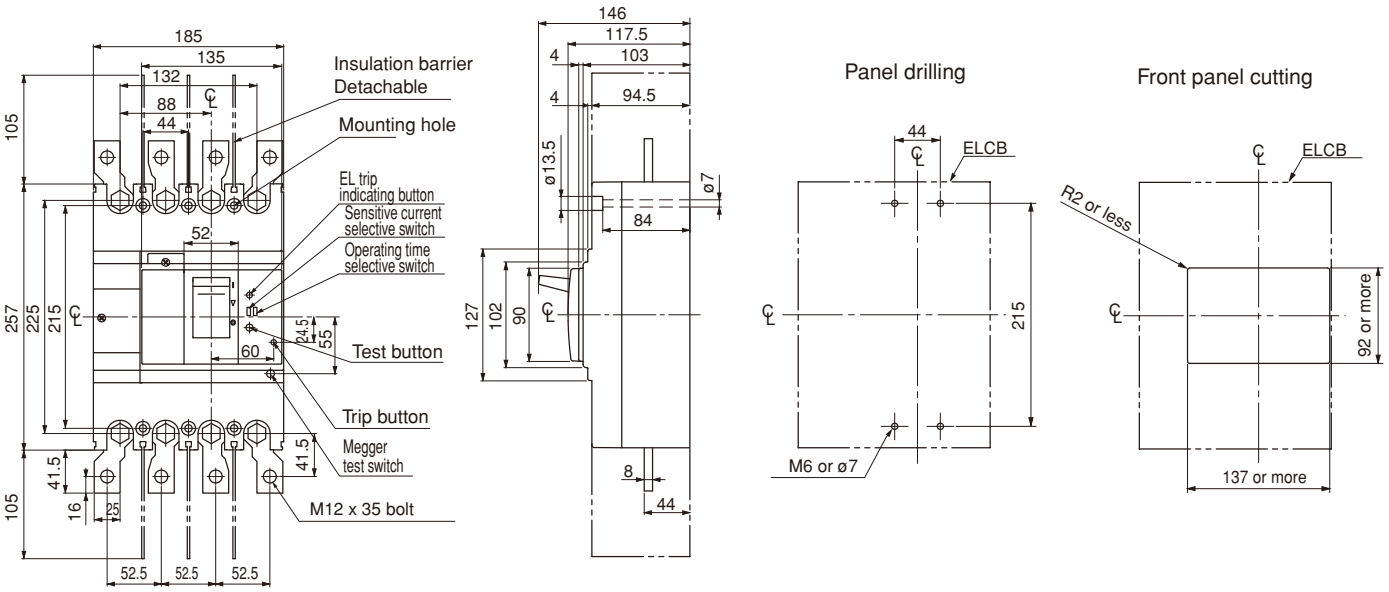

Fuji Electric FA Components & Systems Co., Ltd.
Information subject to change without notice

■ Dimensions, mm

● Front mounting, front connection

EW630□-3P

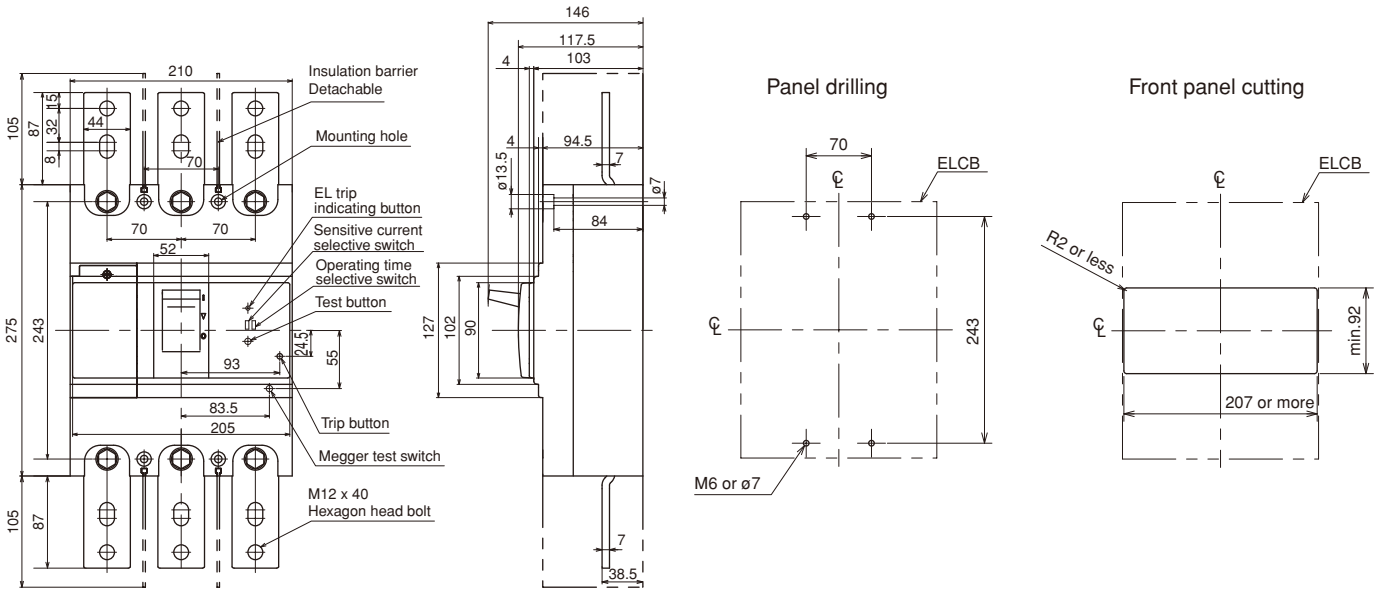

EW800□-3P

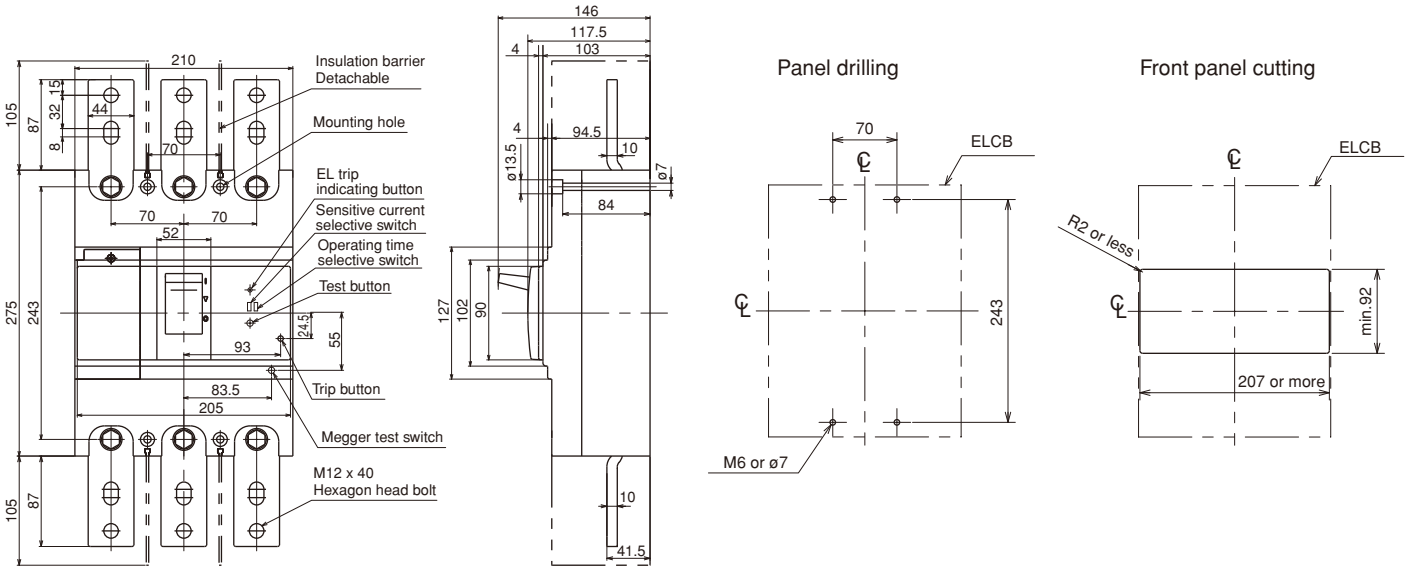

Earth Leakage Circuit Breakers
G-TWIN series Dimensions / Standard

■ Dimensions, mm

● Front mounting, rear connection (type X)

EW32□-2P, EW50□-2P

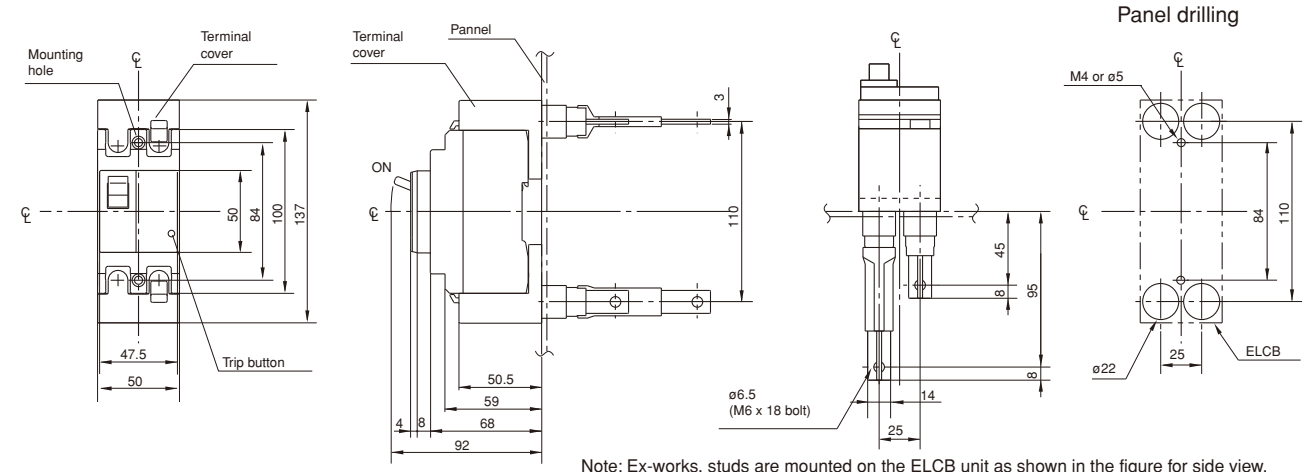

Note: Ex-works, studs are mounted on the ELCB unit as shown in the figure for side view.
•Studs for line side terminal : Mounted horizontally.
•Studs for load-side terminal : Mounted vertically.
Each stud can be turned by 90˚.

EW32□-3P, EW50□-3P

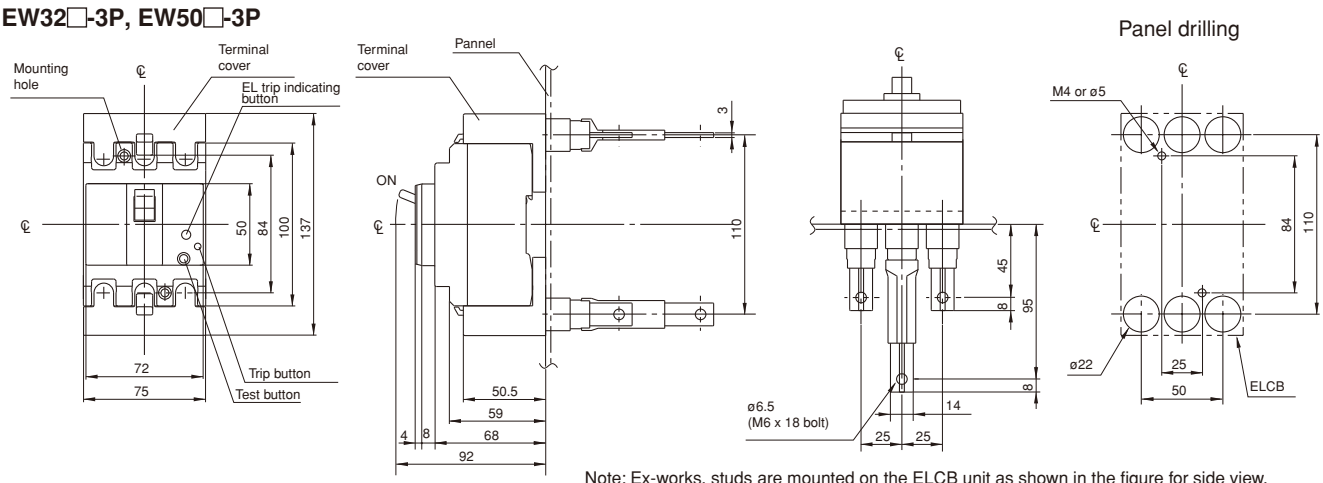

Note: Ex-works, studs are mounted on the ELCB unit as shown in the figure for side view.
•Studs for line side terminal : Mounted horizontally.
•Studs for load-side terminal : Mounted vertically.
Each stud can be turned by 90˚.
2-pole breaker is supplied in 3-pole frame with current carrying parts omitted from center pole.

EW63□-3P

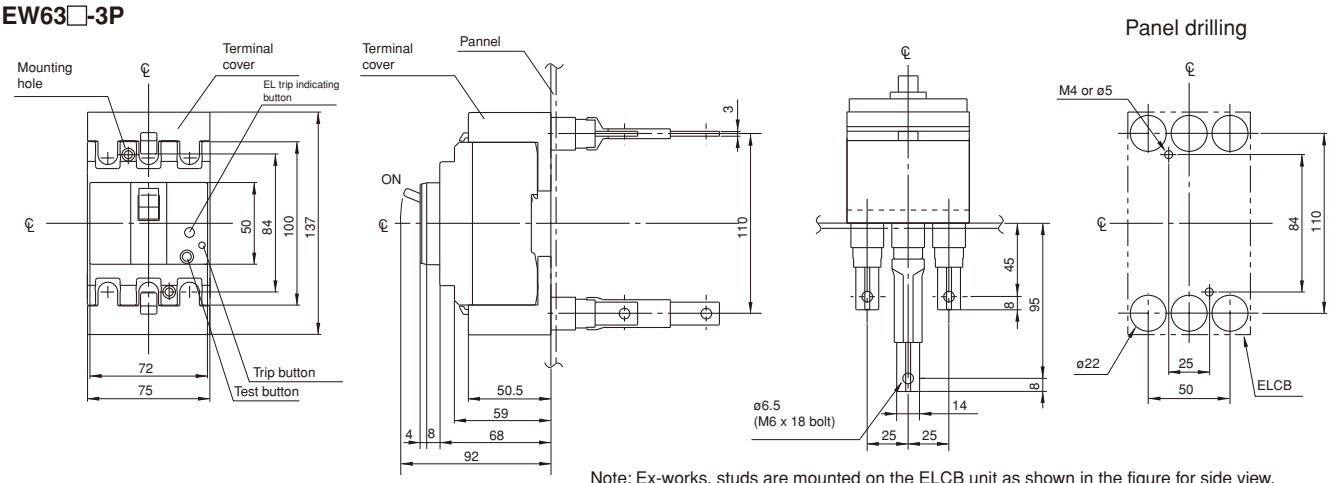

Note: Ex-works, studs are mounted on the ELCB unit as shown in the figure for side view.
•Studs for line side terminal : Mounted horizontally.
•Studs for load-side terminal : Mounted vertically.
Each stud can be turned by 90˚.
2-pole breaker is supplied in 3-pole frame with current carrying parts omitted from center pole.

Fuji Electric FA Components & Systems Co., Ltd.
Information subject to change without notice

■ Dimensions, mm

● Front mounting, rear connection (type X)

EW100□-2P,3P

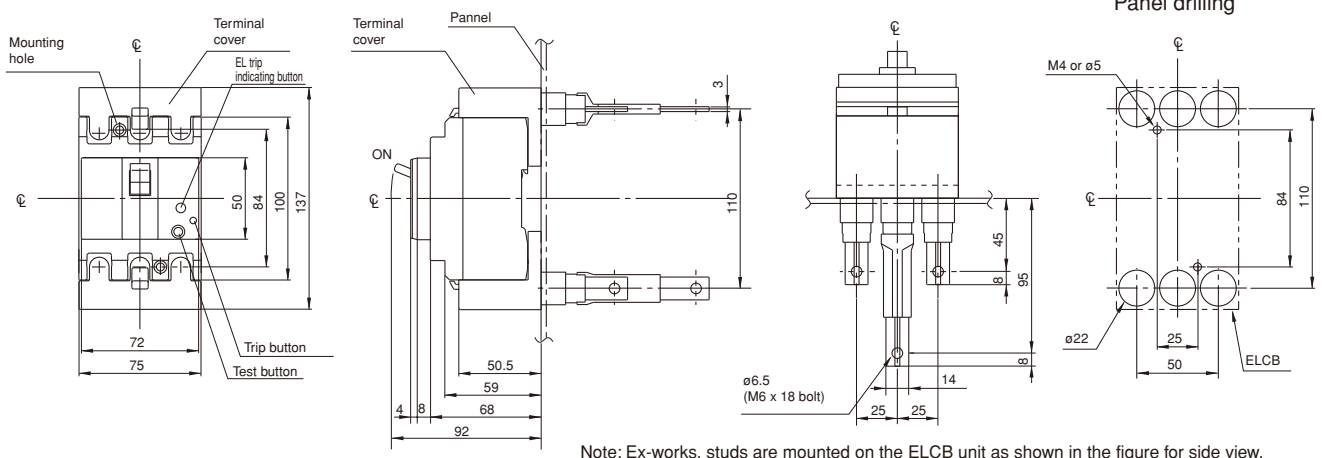

Note: Ex-works, studs are mounted on the ELCB unit as shown in the figure for side view.
•Studs for line side terminal : Mounted horizontally.
•Studs for load-side terminal : Mounted vertically.
Each stud can be turned by 90˚.
2-pole breaker is supplied in 3-pole frame with current carrying parts omitted from center pole.

EW125□-3P

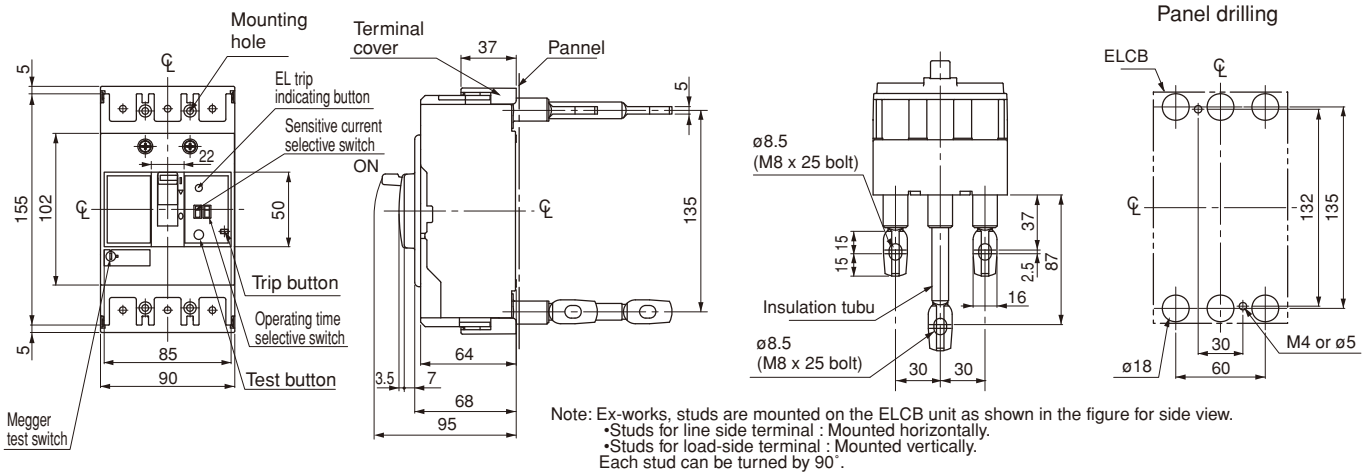

Note: Ex-works, studs are mounted on the ELCB unit as shown in the figure for side view.
•Studs for line side terminal : Mounted horizontally.
•Studs for load-side terminal : Mounted vertically.
Each stud can be turned by 90˚.

Earth Leakage Circuit Breakers
G-TWIN series Dimensions / Standard

■ Dimensions, mm

● Front mounting, rear connection (type X)

EW125□-4P

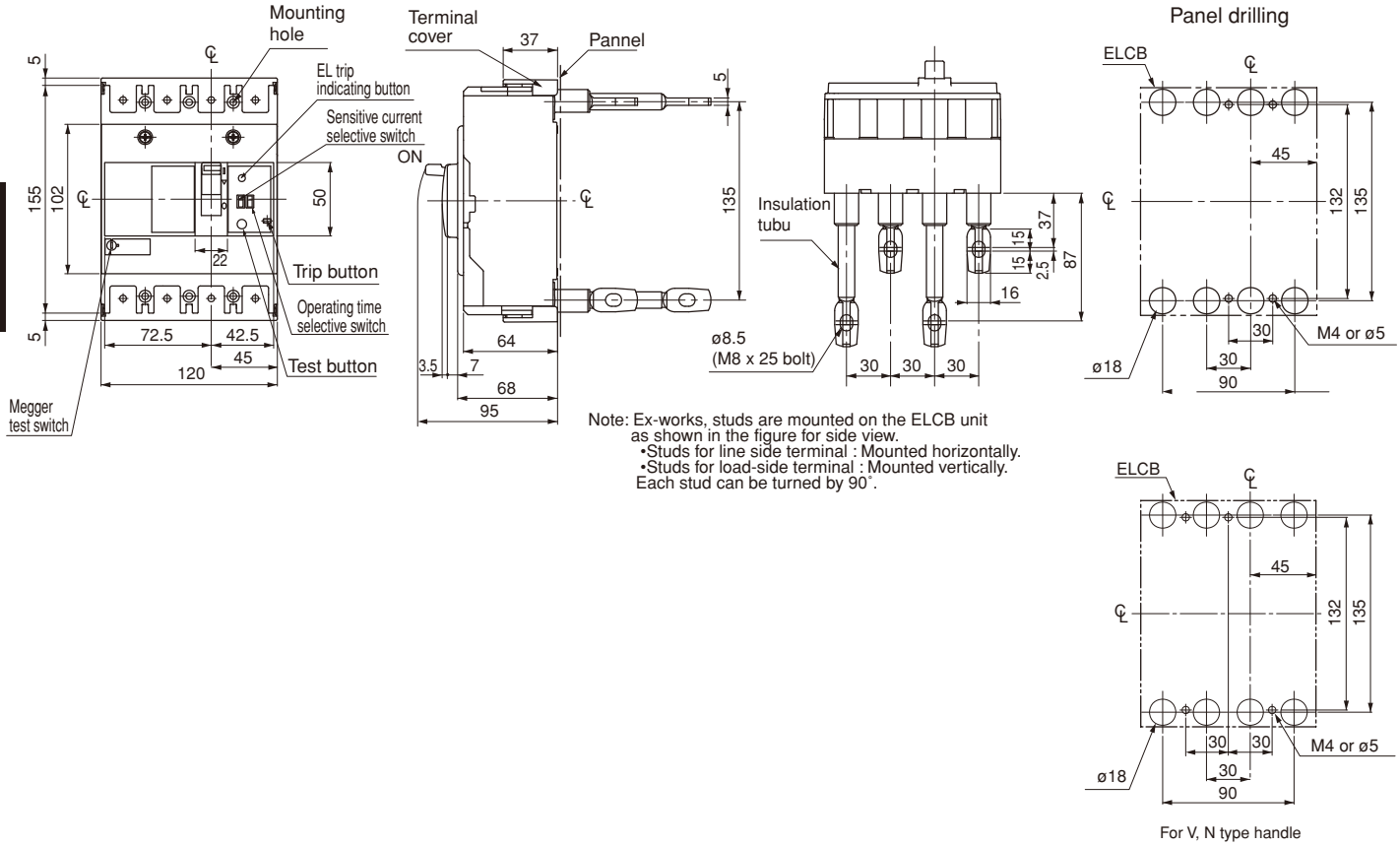

Note: Ex-works, studs are mounted on the ELCB unit as shown in the figure for side view.
•Studs for line side terminal : Mounted horizontally.
•Studs for load-side terminal : Mounted vertically.
Each stud can be turned by 90˚.

Fuji Electric FA Components & Systems Co., Ltd.
Information subject to change without notice

■ Dimensions, mm

● Front mounting, rear connection (type X)

EW160□-3P
EW250□-3P

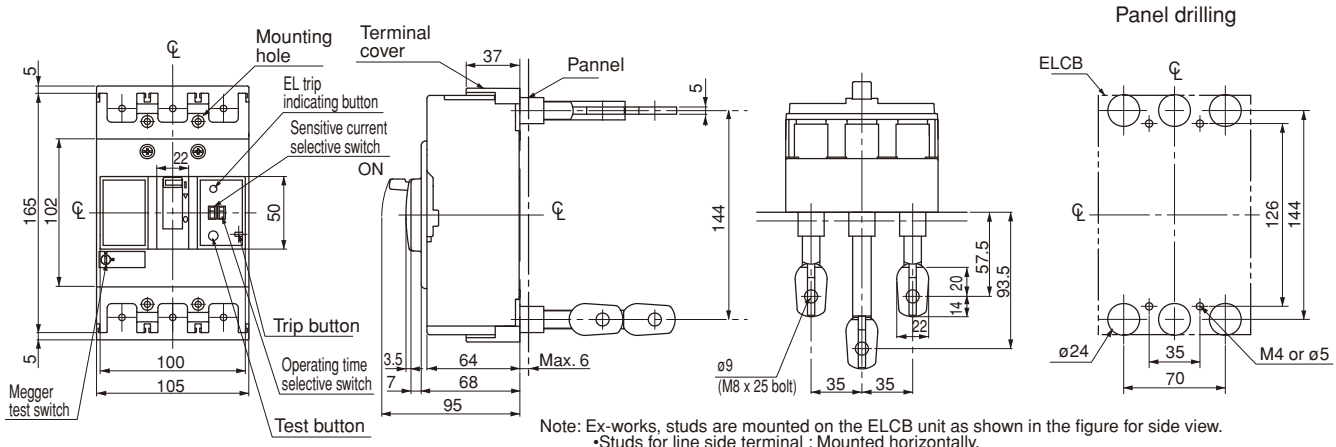

Note: Ex-works, studs are mounted on the ELCB unit as shown in the figure for side view.
•Studs for line side terminal : Mounted horizontally.
•Studs for load-side terminal : Mounted vertically.
Each stud can be turned by 90˚.

EW160□-4P
EW250□-4P

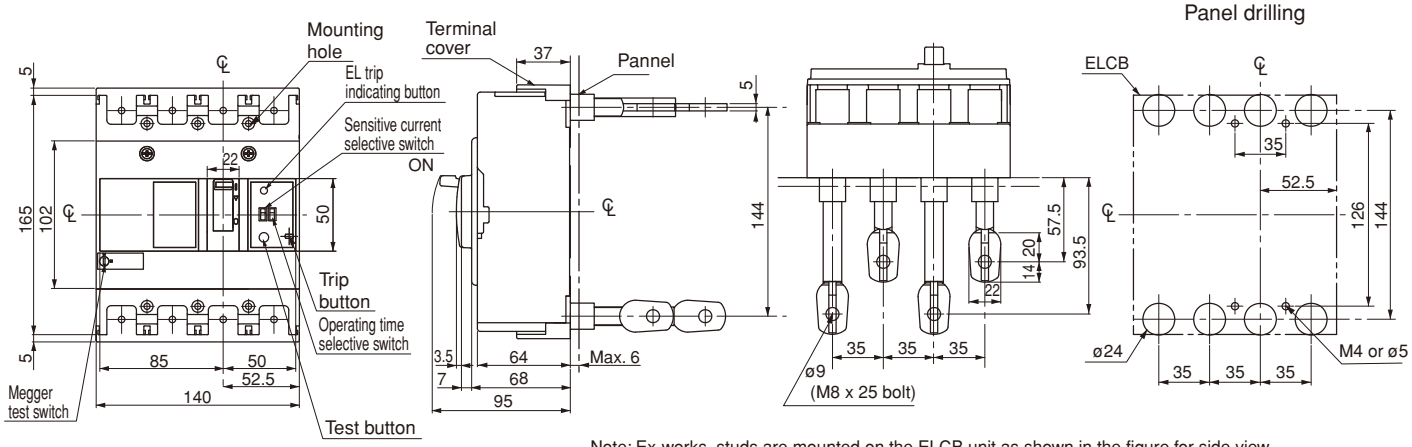

Note: Ex-works, studs are mounted on the ELCB unit as shown in the figure for side view.
•Studs for line side terminal : Mounted horizontally.
•Studs for load-side terminal : Mounted vertically.
Each stud can be turned by 90˚.

Earth Leakage Circuit Breakers
G-TWIN series Dimensions / Standard

■ Dimensions, mm

● Front mounting, rear connection (type X)

EW400□-3P

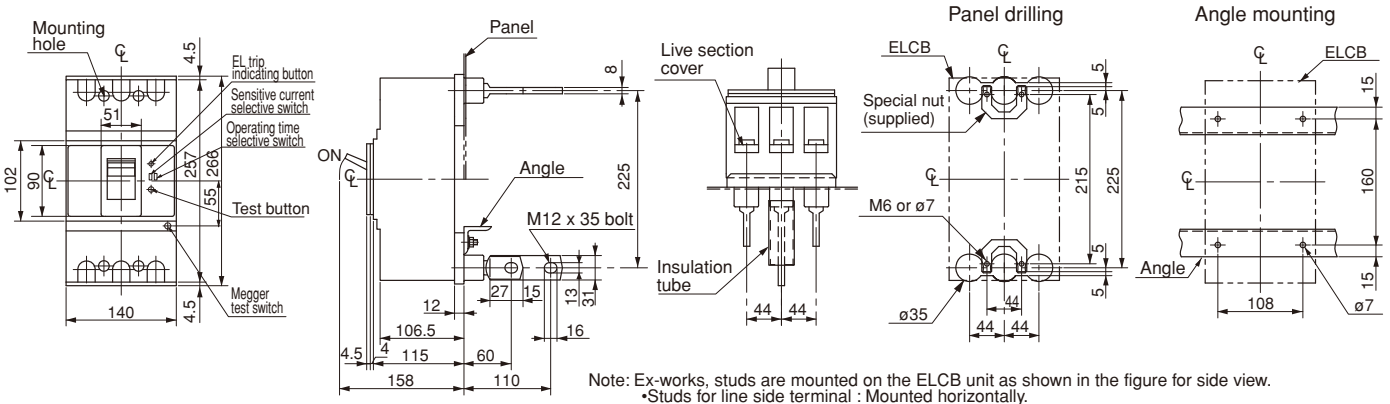

Note: Ex-works, studs are mounted on the ELCB unit as shown in the figure for side view.
•Studs for line side terminal : Mounted horizontally.
•Studs for load-side terminal : Mounted vertically.
Each stud can be turned by 90˚.

EW400□-4P

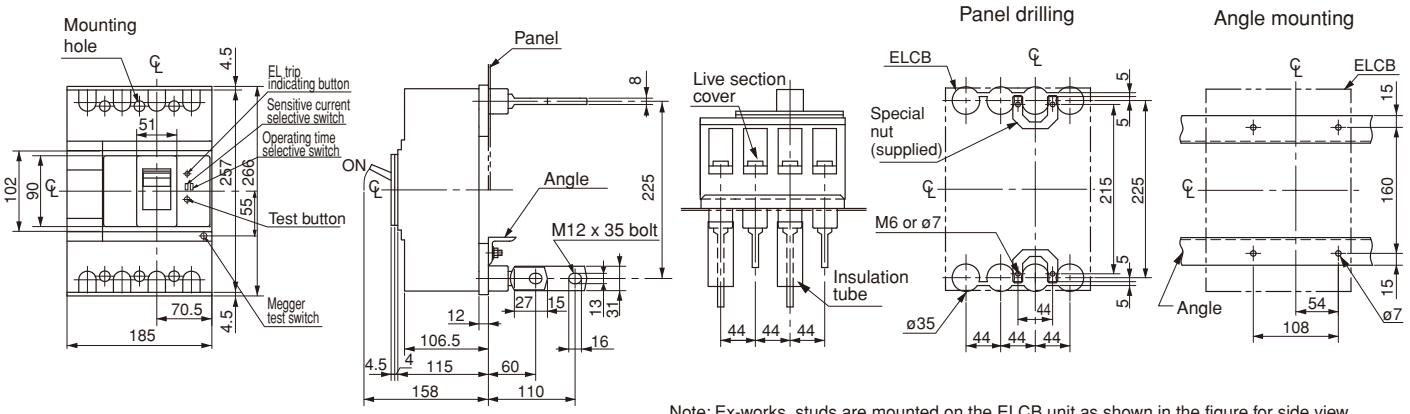

Note: Ex-works, studs are mounted on the ELCB unit as shown in the figure for side view.
•Studs for line side terminal : Mounted horizontally.
•Studs for load-side terminal : Mounted vertically.
Each stud can be turned by 90˚.

Fuji Electric FA Components & Systems Co., Ltd.
Information subject to change without notice

■ Dimensions, mm

● Front mounting, rear connection (type X)

EW630□-3P

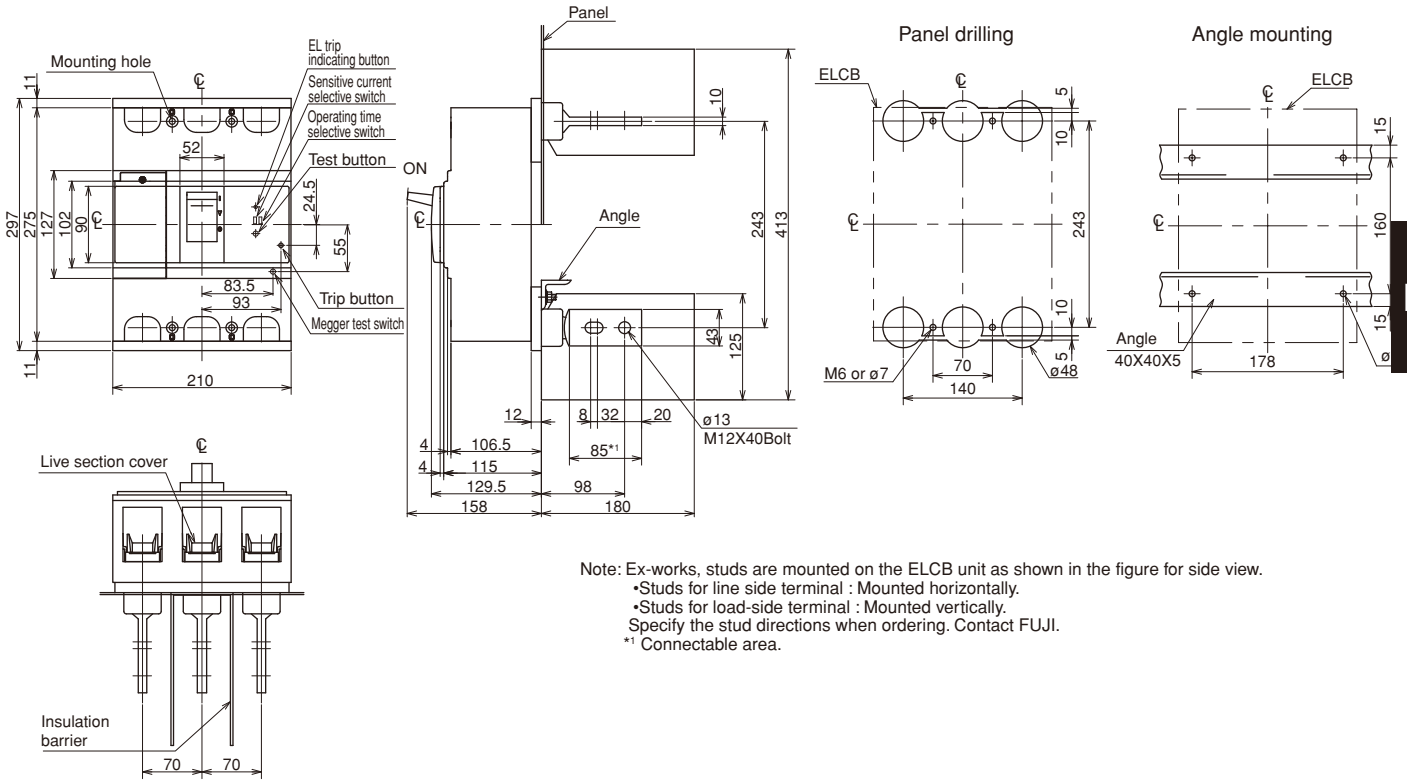

Note: Ex-works, studs are mounted on the ELCB unit as shown in the figure for side view.
•Studs for line side terminal : Mounted horizontally.
•Studs for load-side terminal : Mounted vertically.
Specify the stud directions when ordering. Contact FUJI.
*1 Connectable area.

EW800□-3P

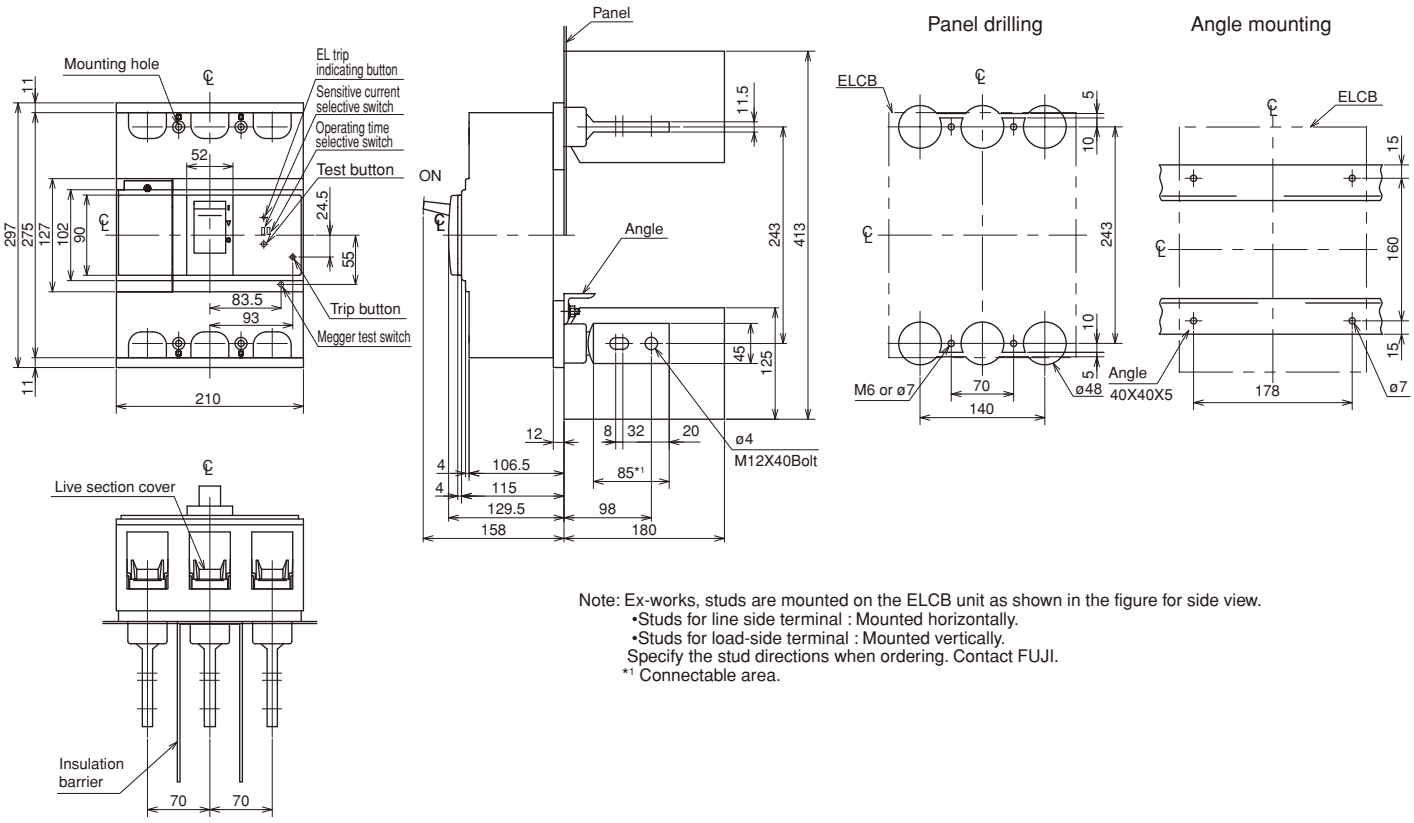

Note: Ex-works, studs are mounted on the ELCB unit as shown in the figure for side view.
•Studs for line side terminal : Mounted horizontally.
•Studs for load-side terminal : Mounted vertically.
Specify the stud directions when ordering. Contact FUJI.
*1 Connectable area.

Earth Leakage Circuit Breakers
G-TWIN series Dimensions / Global

■ Dimensions, mm

● Front mounting, front connection

EW50RAGU-3P

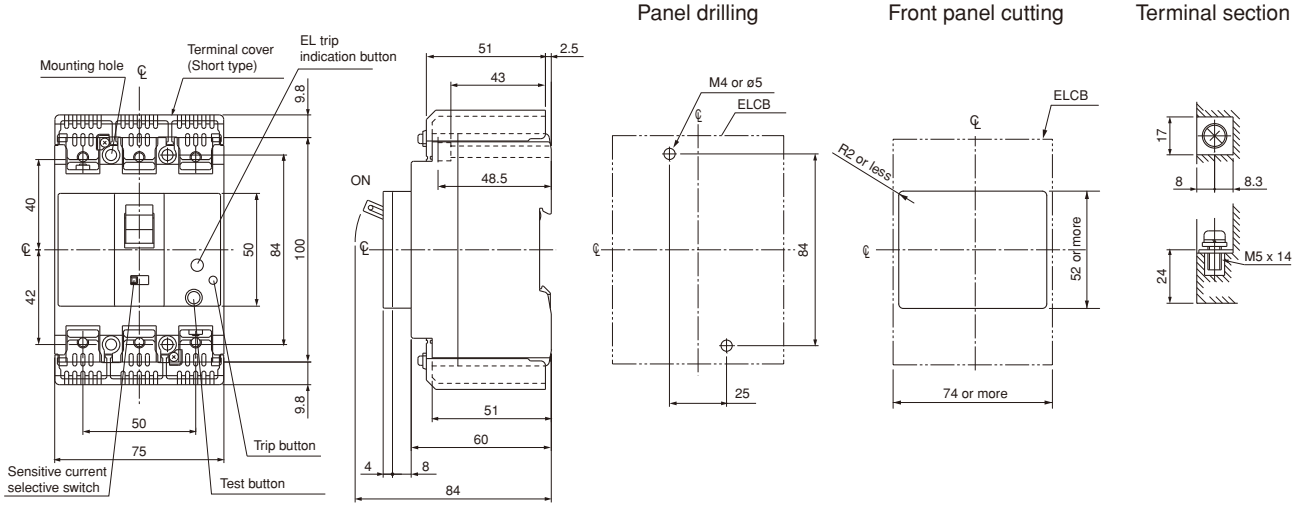

EW100EAGU-2P, -3P

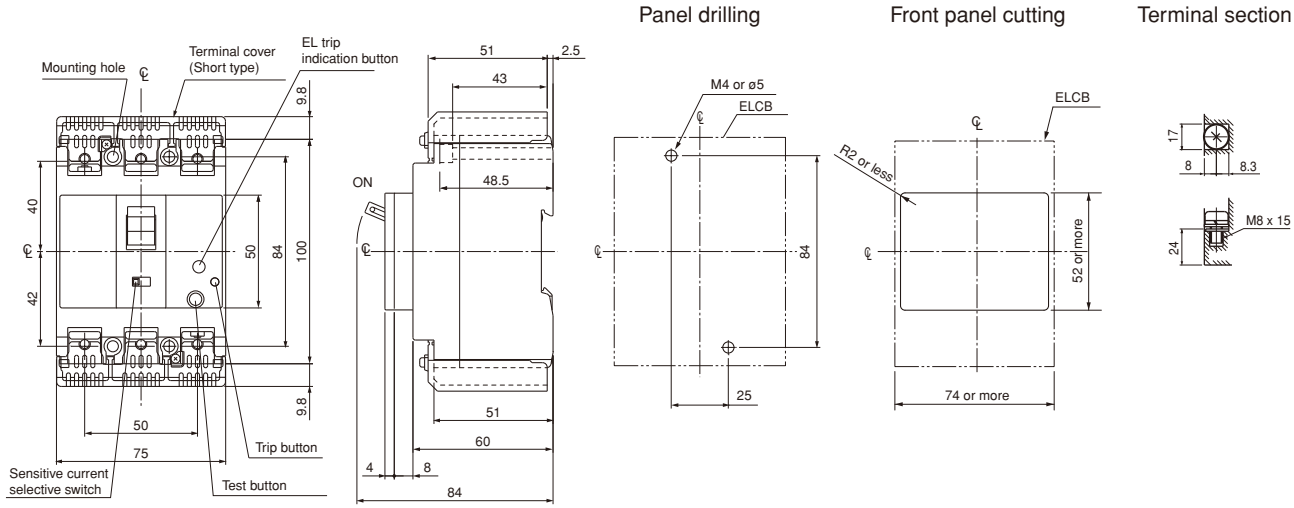

Fuji Electric FA Components & Systems Co., Ltd.
Information subject to change without notice

■ Dimensions, mm

● Front mounting, front connection

EW125□U-3P

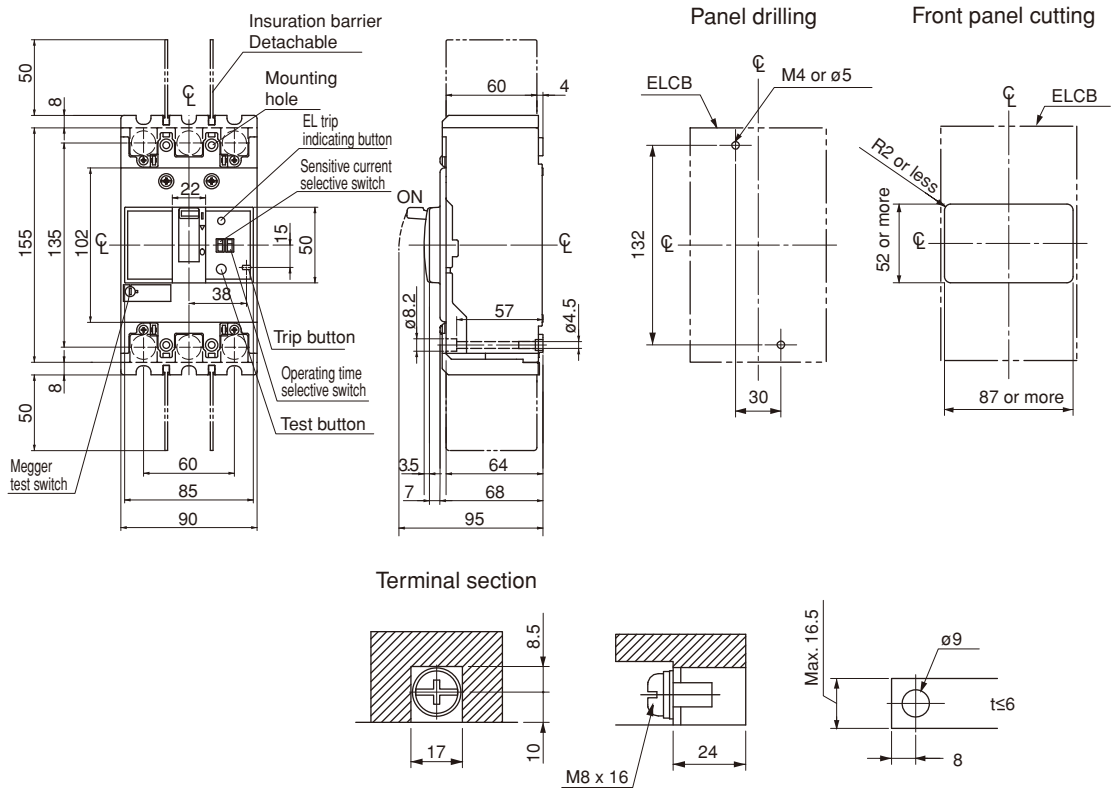

EW250□U-3P

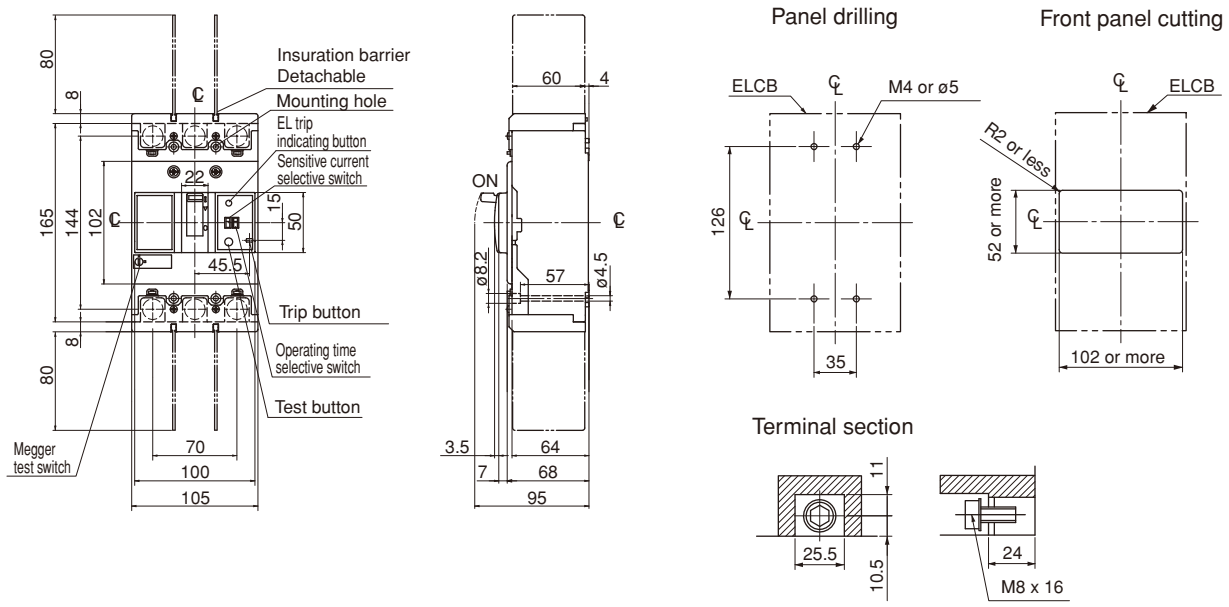

Earth Leakage Circuit Breakers
G-TWIN series Dimensions / Global

■ Dimensions, mm

● Front mounting, front connection

EW400□U-3P

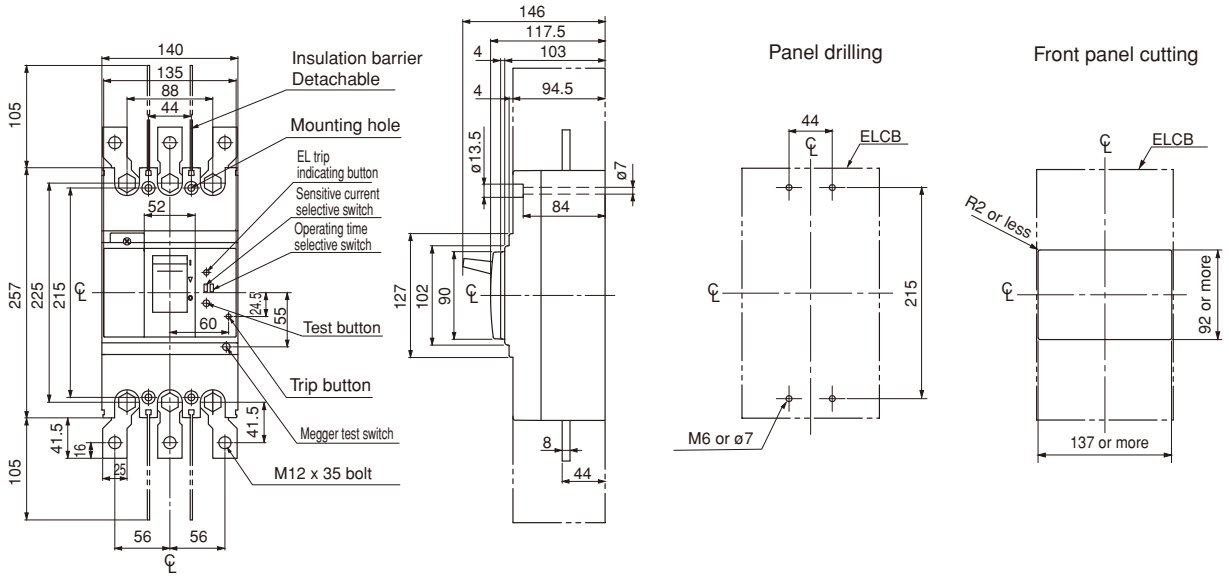

EW630□U-3P

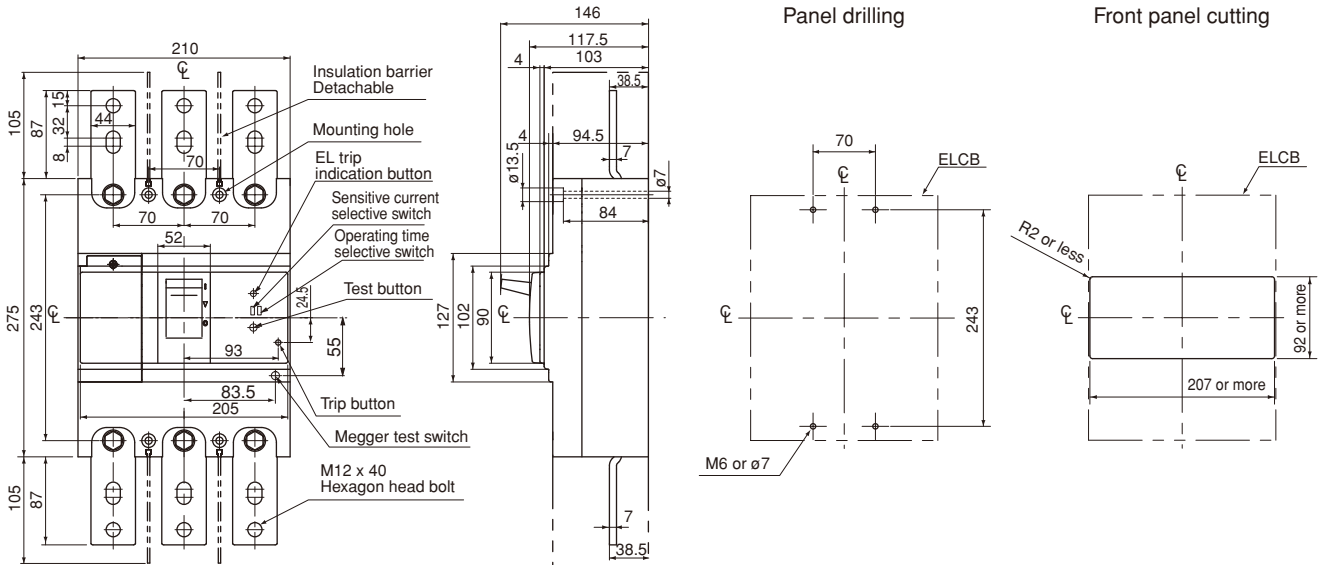

Fuji Electric FA Components & Systems Co., Ltd.
Information subject to change without notice

Earth Leakage Circuit Breakers
G-TWIN series Characteristic curves

■ Characteristic curves / Line protection

EW32/50/63/100

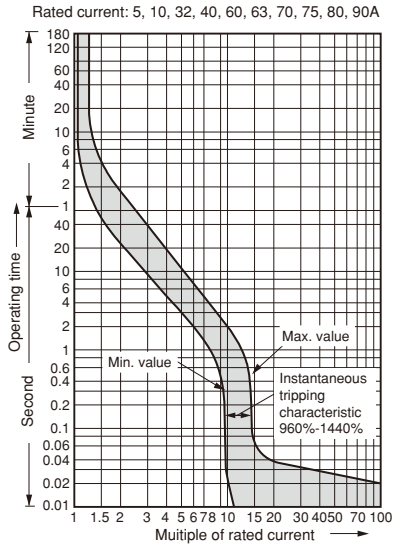

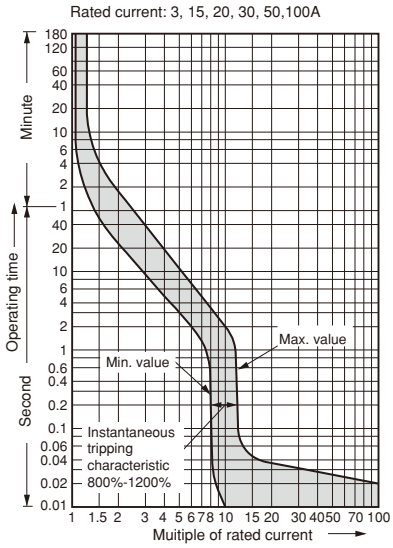

Temperature correction curve

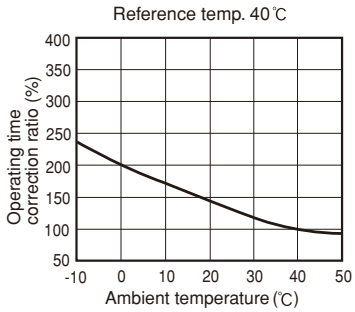

Earth leakage tripping

EW32/50/63/100

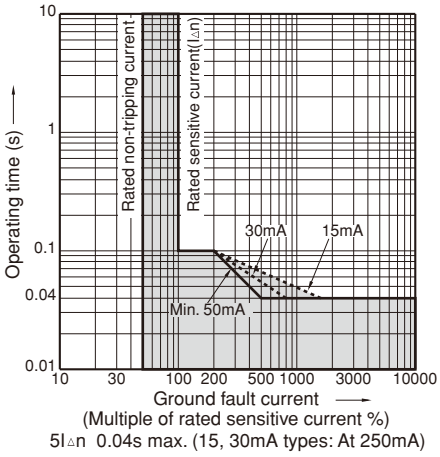

5I△n 0.04s max. (15, 30mA types: At 250mA)

Earth Leakage Circuit Breakers G-TWIN series Characteristic curves

■ Characteristic curves / Line protection

EW125

• 15A

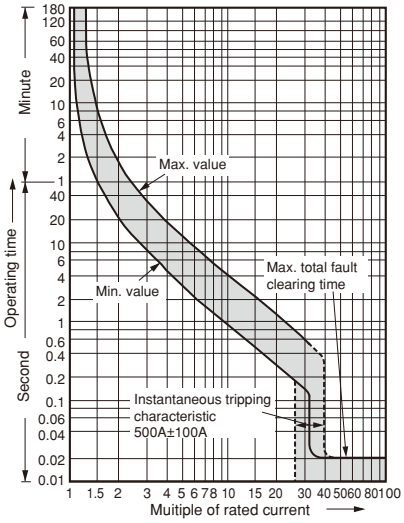

• 20A

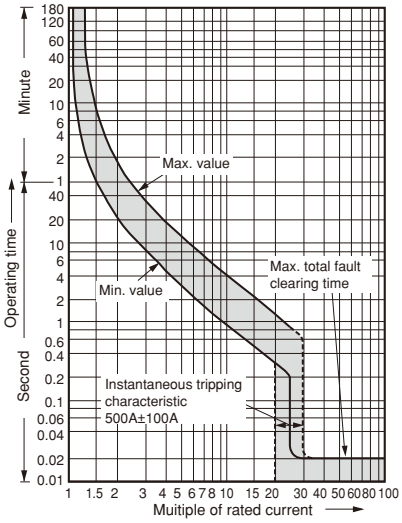

• 30A

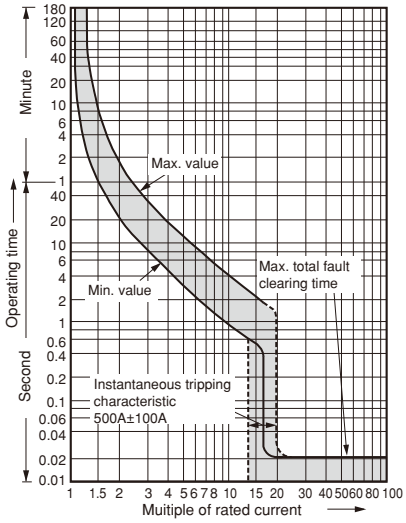

Temperature correction curve

• 15-30A

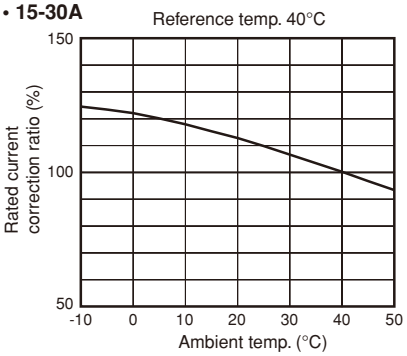

• 40A

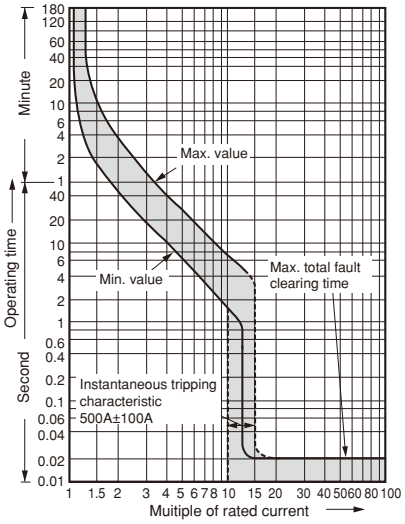

• 50-125A

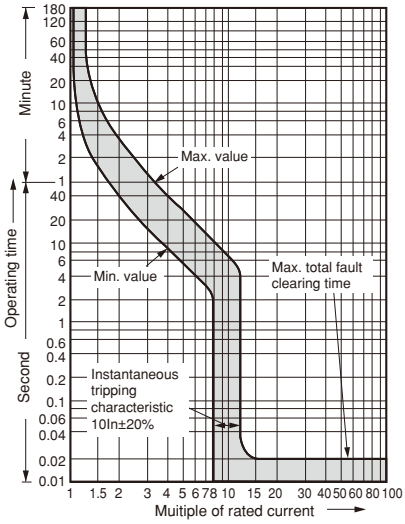

Temperature correction curve

• 40-125A

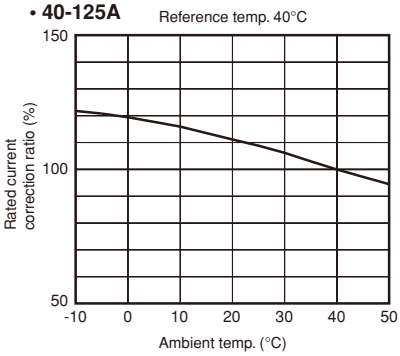

Fuji Electric FA Components & Systems Co., Ltd.
Information subject to change without notice

■ Characteristic curves / Line protection

EW160/250

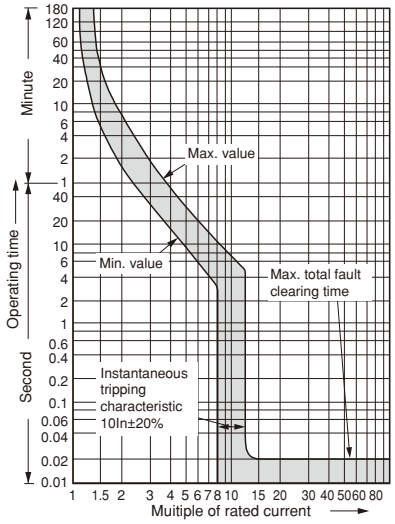

Temperature correction curve

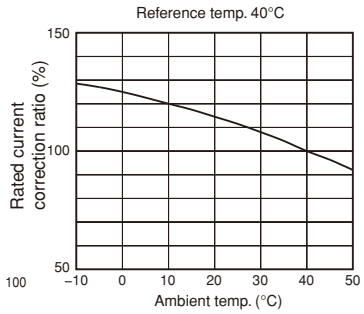

EW400

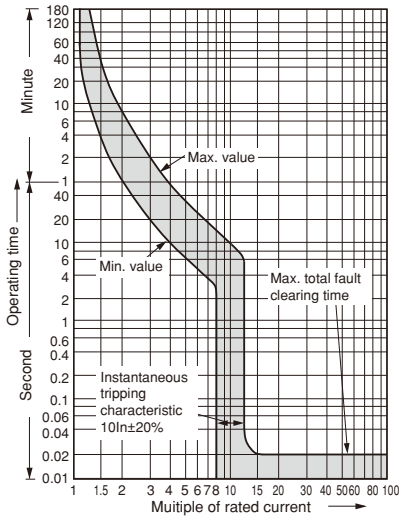

Temperature correction curve

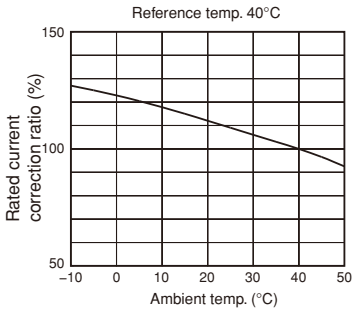

EW630

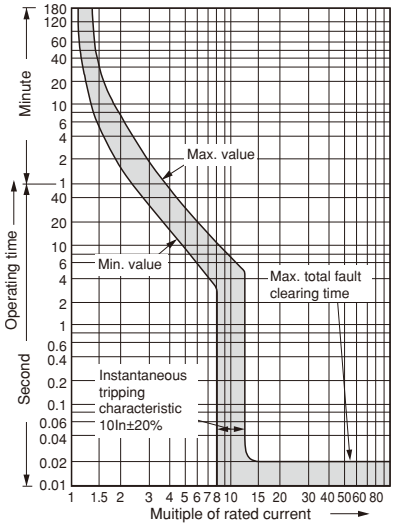

Temperature correction curve

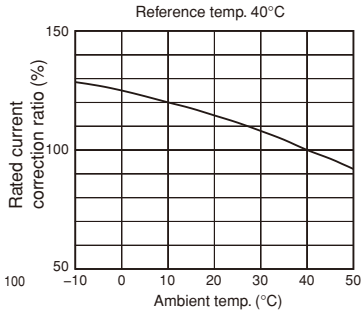

Earth Leakage Circuit Breakers
G-TWIN series Characteristic curves

■ Characteristic curves / Line protection

EW800

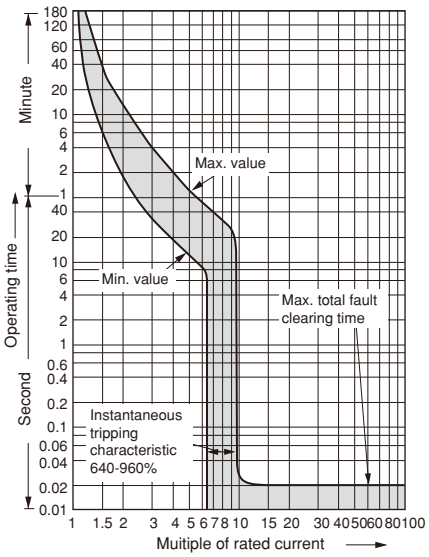

Temperature correction curve

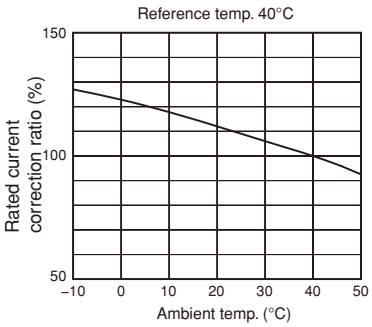

Earth leakage tripping

EW125/160/250/400/630/800

Instantaneous trip type

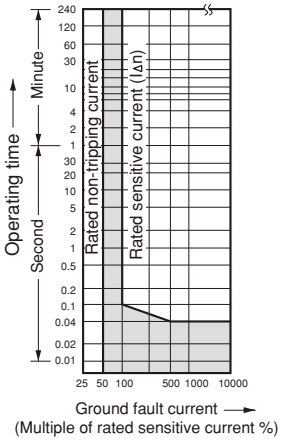

Time-delay trip type

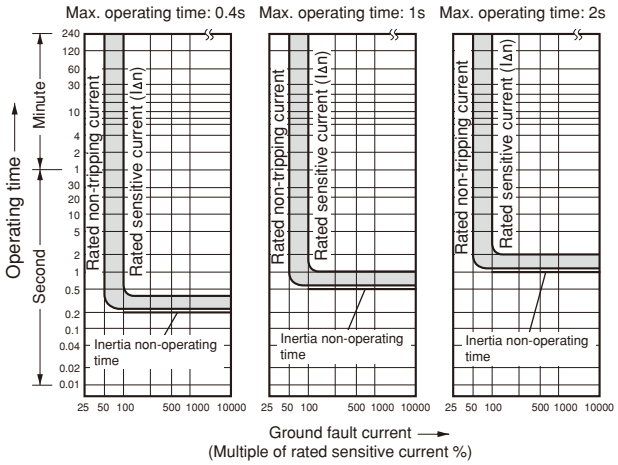

Fuji Electric FA Components & Systems Co., Ltd.
Information subject to change without notice

■ Characteristic curves / Motor protection

EW32/50/63/100

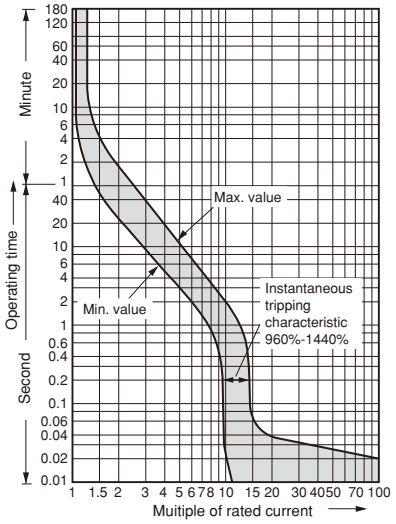

Temperature correction curve

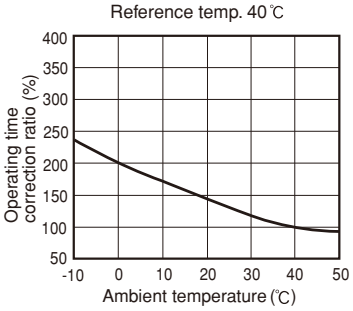

EW125

• 16A

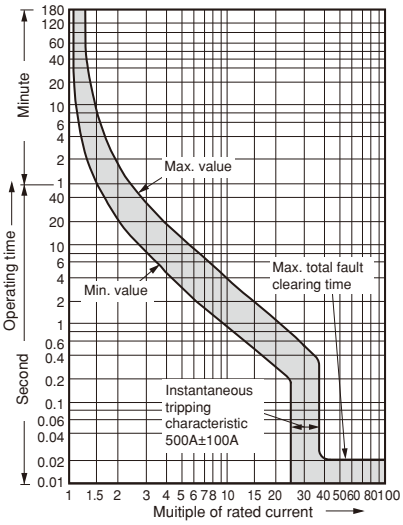

• 24A

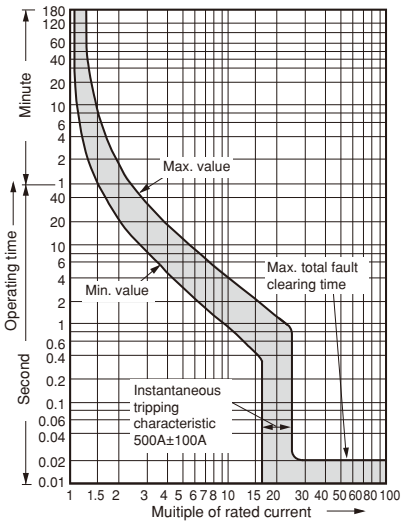

• 32A

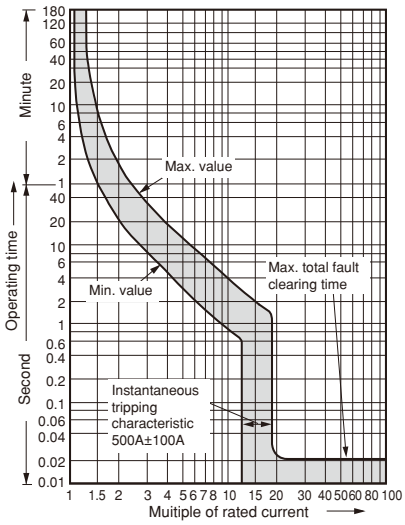

• 40-90A

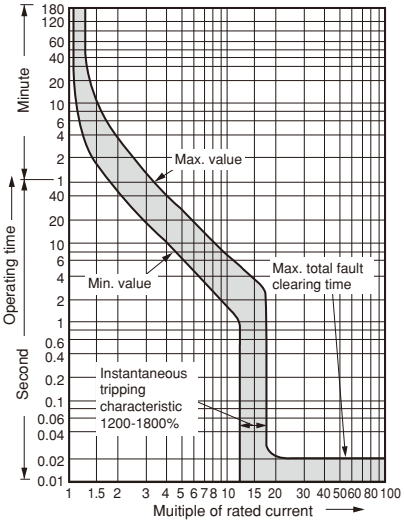

Temperature correction curve

• 15-32A

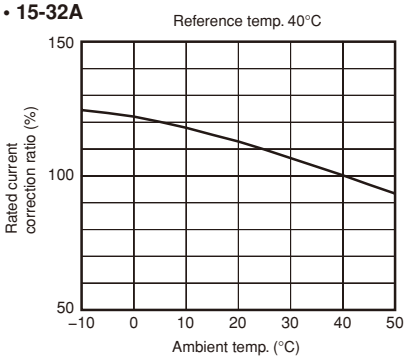

• 40-90A

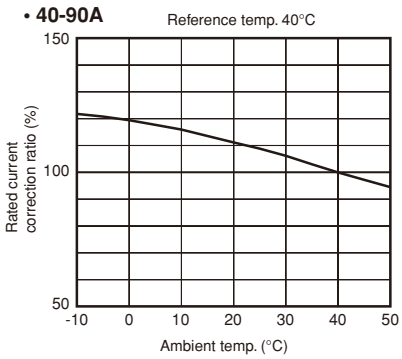

Earth Leakage Circuit Breakers
G-TWIN series Characteristic curves

■ Characteristic curves / Motor protection

EW250

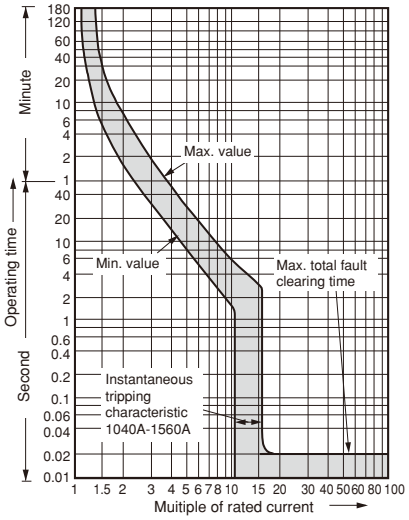

Temperature correction curve

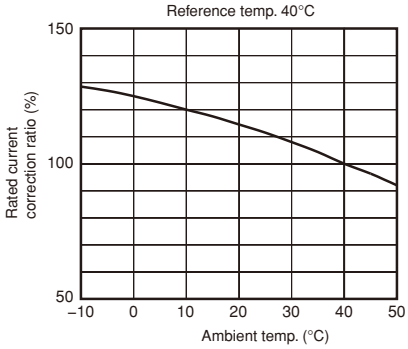

Earth leakage tripping

EW32/50/63/100

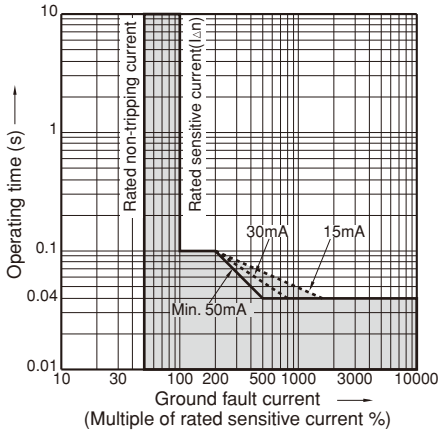

5I△n 0.04s max. (15, 30mA types: At 250mA)

EW125/160/250

Instantaneous trip type

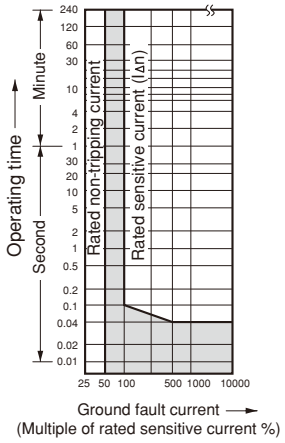

Time-delay trip type

Max. operating time: 0.4s Max. operating time: 1s Max. operating time: 2s

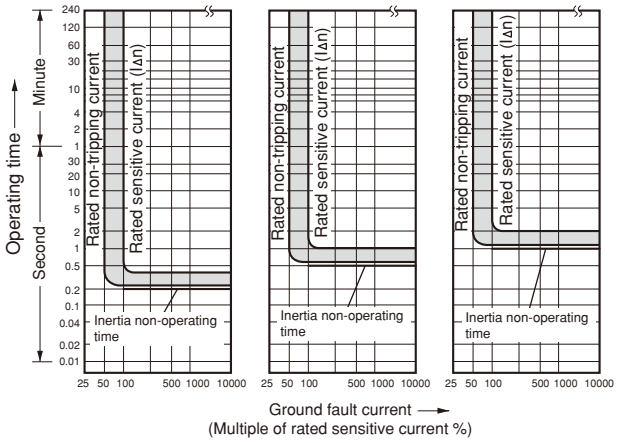

Fuji Electric FA Components & Systems Co., Ltd.
Information subject to change without notice

■ Variation of internal accessory

• 32 to100AF

Auxiliary switch (Type W)

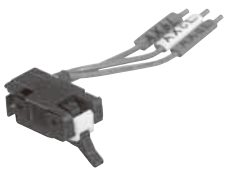

This switch is used for indicator lamp or control circuit.
See page B1-155.

Alarm switch (Type K)

This switch can be connected to a warning lamp or buzzer to indicate when the breaker has been tripped.
See page B1-155.

Shunt trip device (Type F)

The purpose of this accessory is to trip the breaker from a distance.
See page B1-156.

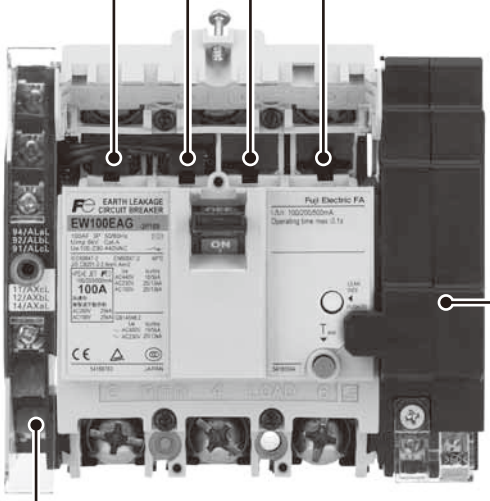

Undervoltage trip device (Type R)

The device is designed to protect circuits from harmful voltage drops.
It can also be used for remote control purposes. The trip operates when the voltage drops to less than 70% of nominal coil rating, and the breaker cannot be reset until the voltage recovers 85% of its normal rating.
See page B1-157.

Terminal block (Type A)

A wiring terminal for internal accessories (Order with W, K or F)
See page B1-158.

Earth Leakage Circuit Breakers G-TWIN series Accessories

■ Variation of internal accessory

• **125 to 250AF**

Auxiliary switch (Type W)

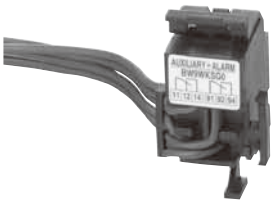

This switch is used for indicator lamp or control circuit.
See page B1-155.

Alarm switch (Type K)

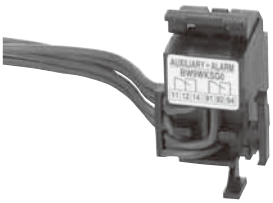

This switch can be connected to a warning lamp or buzzer to indicate when the breaker has been tripped.
See page B1-155.

Shunt trip device (Type F)

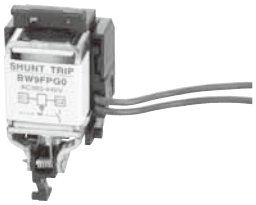

The purpose of this accessory is to trip the breaker from a distance.
See page B1-156.

Undervoltage trip device (Type R)

The device is designed to protect circuits from harmful voltage drops.
It can also be used for remote control purposes. The trip operates when the voltage drops to less than 70% of nominal coil rating, and the breaker cannot be reset until the voltage recovers 85% of its normal rating.
See page B1-157.

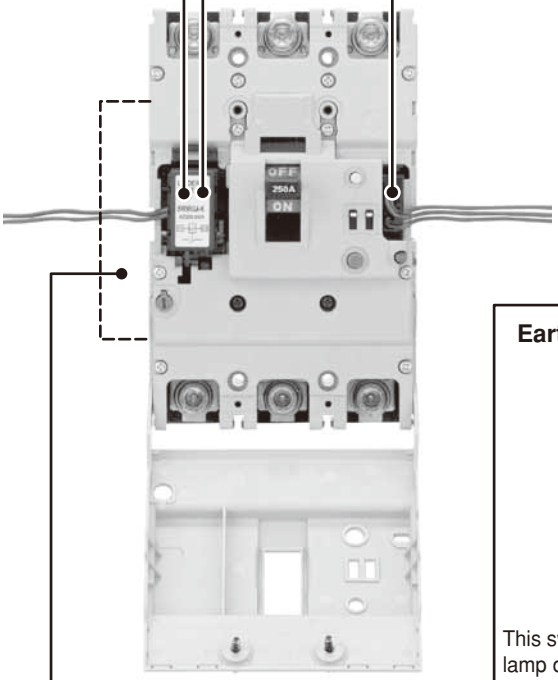

Earth alarm switch (Type L)

This switch can be connected to a warning lamp or buzzer to indicate when the breaker has been tripped by leakage current.
See page B1-155.

Terminal block (Type A)

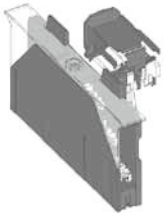

A wiring terminal for internal accessories (Factory-mounted)
See page B1-158.

■ Variation of internal accessory

• 400 to 800AF

Alarm switch (Type K)

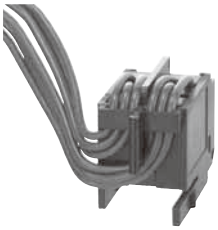

This switch can be connected to a warning lamp or buzzer to indicate when the breaker has been tripped.
See page B1-155.

Shunt trip device (Type F)

The purpose of this accessory is to trip the breaker from a distance.
See page B1-156.

Terminal block (Type A)

A wiring terminal for internal accessories (Factory-mounted)
See page B1-158.

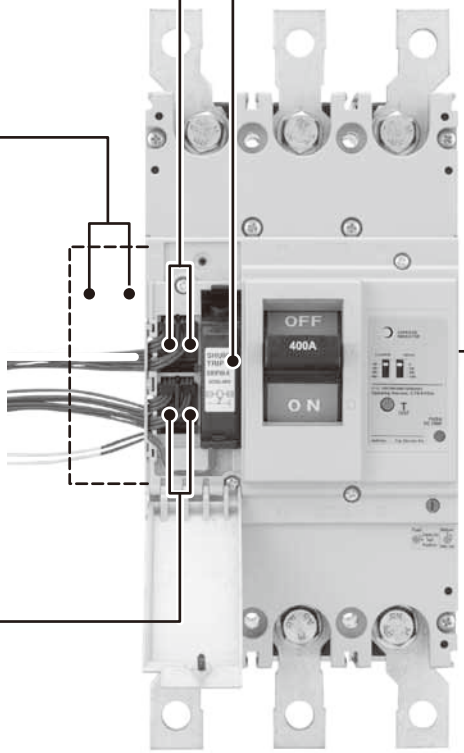

Undervoltage trip device (Type R)

The device is designed to protect circuits from harmful voltage drops.
It can also be used for remote control purposes. The trip operates when the voltage drops to less than 70% of nominal coil rating, and the breaker cannot be reset until the voltage recovers 85% of its normal rating.
See page B1-157.

Auxiliary switch (Type W)

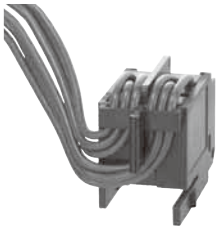

This switch is used for indicator lamp or control circuit.
See page B1-155.

Earth alarm switch (Type L)

This switch can be connected to a warning lamp or buzzer to indicate when the breaker has been tripped by leakage current.
See page B1-155. (Factory-mounted)

Earth Leakage Circuit Breakers
G-TWIN series Accessories

■ Variation of external accessory

External operating handles

• **N-type**
See page B1-166.

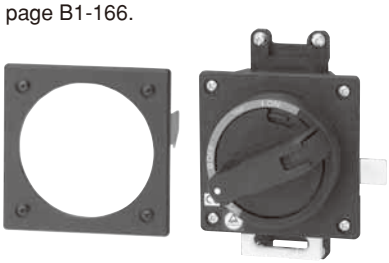

• **V-type**
See page B1-166.

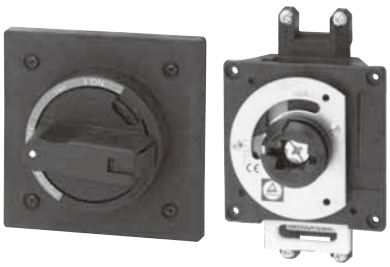

• **F-type**
See page B1-166.

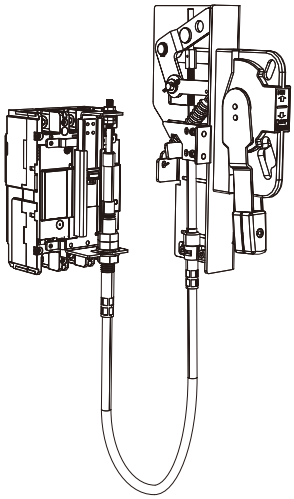

Terminal cover
Long type
See page B1-177.

Interphase barrier
See page B1-178.

Terminal cover
Short type
See page B1-177.

Steel enclosures
See page B1-175.

Mechanical interlock device
See page B1-162.

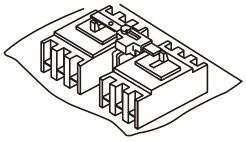

Motor-operating mechanism
See page B1-161.

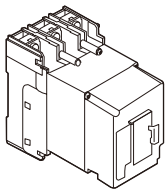

Handle locking cover (L1)
See page B1-179.

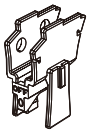

Padlocking device
See page B1-179.

• **Cap type (Q1, QN)**

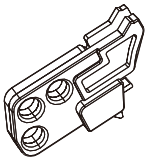

• **Plate type (Q2)**

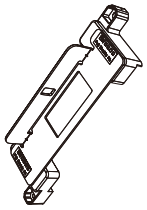

■ Terminal blocks for auxiliary circuit

- It indicates the terminal No. of internal accessory.The connection method of internal accessory is lead-wire system and terminal block system.
- For the available configuration of internal accessory, *see page B1-154.*

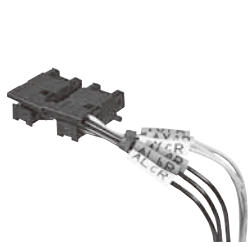

Lead-wire wiring

With terminal block

• Terminal number of internal accessory

Accessory		32 – 250AF		400 – 800AF
		Left side mounting	Right side mounting	Left side mounting
Auxiliary switch	SPDT: W (1)*	11 12 14 AXcL AXbL AXaL	21 22 24 AXcR AXbR AXaR	11 12 14 AXc AXb AXa
	2PDT: V (2)*	11 12 14 AXcL AXbL AXaL	21 22 24 AXcR AXbR AXaR	11 12 14 AXc AXb AXa 21 22 24 AXc AXb AXa
Alarm switch	SPDT: K (8)*	91 92 94 ALcL ALbL ALaL	01 02 04 ALcR ALbR ALaR	91 92 94 ALc ALb ALa
	2PDT: J (9)*	91 92 94 ALcL ALbL ALaL	01 02 04 ALcR ALbR ALaR	91 92 94 ALc ALb ALa 01 02 04 ALc ALb ALa
Shunt trip device : F	With 1NO contact to prevent coil burn-out	C2 C1 S2 S1		—
	Continuous rating	—		C2 C1 S2 S1
Undervoltage trip device : R		U< D2 D1 P2 P1		
Earth alarm switch (125 to 800AF)		71 72 74		

Note: * ( ) Code of Low level circuit

Earth Leakage Circuit Breakers
G-TWIN series Internal accessories

■ Available configurations

ECCB	EW32AAG-2P EW50AAG-2P	EW32□-3P EW50□-3P EW63□-3P EW100□-2P EW100□-3P	EW125 EW160 EW250		EW400 EW630 EW800
Pole	2	2, 3	3	4	3, 4
Auxliary switch SPDT: W (1)*					
Alarm switch SPDT: K (8)*					
Shunt trip: F					
Undervoltage trip: R					
W+K (1+8)					
Auxliary switch 2PDT: V (2)					
Alarm switch 2PDT: J (9)					
V+K (2+8)					
W+J (1+9)					
V+J (2+9)					
W+F (1+F)					
W+R (1+R)		*2			
K+F (8+F)					
K+R (8+R)		*2			
W+K+F (1+8+F)					
W+K+R (1+8+R)		*2			
V+F (2+F)					
V+R (2+R)		*2 *1			
J+F (9+F)					
J+R (9+R)		*2 *1			
V+K+F (2+8+F)					
V+K+R (2+8+R)		*2 *1			
W+J+F (1+9+F)					
W+J+R (1+9+R)		*2 *1			
V+J+F (2+9+F)					
V+J+R (2+9+R)		*2 *1			
L					

Notes: •The above table is applied to front mounting type, rear mounting type, flush mounting type, and plug-in mounting type.
• Terminal block is attached on the same side of the accessory.
• ( ) Code of low level circuit □:See page B1-94.

Fuji Electric FA Components & Systems Co., Ltd.
Information subject to change without notice

■ Operation of auxiliary switches(W) and alarm switches(K)

Accessory	Handle position		
	ON	OFF	Trip
Auxiliary switch SPDT: **W** **(1)**	11/AXcL — 14/AXaL; 12/AXbL	11/AXcL — 14/AXaL; 12/AXbL	
2PDT: **V** **(2)**	11/AXcL — 14/AXaL; 12/AXbL; 21/AXcR — 24/AXaR; 22/AXbR	11/AXcL — 14/AXaL; 12/AXbL; 21/AXcR — 24/AXaR; 22/AXbR	
Alarm switch SPDT: **K** **(8)**	91/ALcL — 94/ALaL; 92/ALbL		91/ALcL — 94/ALaL; 92/ALbL
2PDT: **J** **(9)**	91/ALcL — 94/ALaL; 92/ALbL; 01/ALcR — 04/ALaR; 02/ALbR		91/ALcL — 94ALaL; 92/ALbL; 01/ALcL — 04/ALaL; 02/ALbL

Note: ▭ Ring mark indication
( ) Code of low level circuit

■ Operation of earth alarm switch (L)

Accessory	Handle position	
	ON/OFF/Overcurrent trip	EL trip
Earth alarm switch L	71 — 74; 72	71 — 74; 72

■ Ratings of auxiliary switches(W) and alarm switches(K)

• 32-100AF

	IEC60947-5-1			NECA C4505		Minimum load current
	Voltage (V)	Make/break current (A)		Voltage (V)	Make/break current (A)	
		AC 15	DC 13		Res. load	
Standard type	125 AC	5	–	125 AC	5	5V DC 160mA 30V DC 30mA
	250 AC	5	–	250 AC	3	
	–	–	–	30 DC	4	
	125 DC	–	0.6	125 DC	0.4	
	250 DC	–	0.3	250 DC	0.2	
Low level circuit	–	–	–	30 DC	0.1	5V DC 1mA

• 125-800AF

	Rated thermal current (A)	Rated operational current (A)						Minimum load current
		AC			DC			
		Rated operational Voltage (V)	Res. load	Ind. load	Rated operational Voltage (V)	Res. load	Ind. load	
Standard type	5	24	5	5	24	4	3	5V DC 160mA 30V DC 30mA
		48	5	5	48	2.5	1	
		125	5	3	125	0.4	0.4	
		250	3	2	250	0.2	0.2	
Low level circuit	0.1	30	0.1	–	30	0.1	–	5V DC 1mA

Earth Leakage Circuit Breakers
G-TWIN series Internal accessories

■ Rating of shunt trip (F)

ELCB type	Installation	AC		DC		Code	Time rating of coil	Opearting time (ms)
		V	VA	V	W			
EW32 **EW50** **EW63** **EW100**	External	100(50Hz)/ 100-110(60Hz)	16	–	–	FAC100V(50Hz)/ 100-110V(60Hz)	Continuous	7-13
		200(50Hz)/ 200-220(60Hz)	16	–	–	FAC200V(50Hz)/ 200-220V(60Hz)		
		400(50Hz)/ 400-440(60Hz)	22	–	–	FAC400V(50Hz)/ 400-440V(60Hz)		
		–	–	24	36	FDC24V		
		–	–	100-110	23	FDC100-110V	Continuous (With 1NO contact to prevent coil burn-out)	
EW125 **EW160** **EW250**	Internal	24	50	24	50	FAC/DC24V	Continuous (With 1NO contact to prevent coil burn-out)	13-21
		48	50	48	50	FAC/DC48V		
		100-120	50	100-110	50	FAC100-120V/ DC100-110V		
		120-130	50	–	–	FAC120-130V		
		200-240	50	200-220	50	FAC200-240V/ DC200-220V		
		277	50	–	–	FAC277V		
		380-440	50	–	–	FAC380-440V		
		440-480	50	–	–	FAC440-480V		
		500-550	50	–	–	FAC500-550V		
EW400 **EW630** **EW800**	Internal	24-48	2	24-48	2	FAC/DC24-48V	Continuous	8-20
		100-240	3	100-220	3	FAC100-240V/ DC100-220V		
		277	3	–	–	FAC277V		
		380-550	4	–	–	FAC380-550V		

Note: The operating tripping voltage range for shunt trip devices is 70% to 110% of the rated operating voltage.

■ Rating of undervoltage trip (R)

ELCB type	Installation	AC		DC		Code
		V	VA	V	W	
EW32 *2 **EW50** *2 **EW63** *2 **EW100** *2	External	100 (50Hz)/ 100-110(60Hz)	2.8	–	–	RAC100V(50Hz)/ 100-110V(60Hz)
		200 (50Hz)/ 200-220 (60Hz)	3.4	–	–	RAC200V(50Hz)/ 200-220V(60Hz)
		400 (50Hz)/ 400-440 (60Hz)	4.4	–	–	RAC400V(50Hz)/ 400-440V(60Hz)
		–	–	24	40	RDC24V
				100-110		RDC100-110V
EW125 *1 **EW160** *1 **EW250** *1	Internal	–	–	24	5	RDC24V
		–	–	48	5	RDC48V
		–	–	100-110	5	RDC100-110V
		–	–	125	5	RDC125V
		100-110	5	–	–	RAC100-110V
		110-130	5	–	–	RAC110V-130V
		200-240	5	–	–	RAC200-240V
		277	5	–	–	RAC277V
		380-415	5	–	–	RAC380-415V
		440-480	5	–	–	RAC440V-480V
EW400 *2 **EW630** *2 **EW800** *2	Internal	24	2	24	2	RAC/DC24V
		48	2	48	2	RAC/DC48V
		100-110	3	100-110	3	RAC/DC100-110V
		120-130	3	125	3	RAC120-130V/DC125V
		200-240	3	200-220	3	RAC200-240V/DC200-220V
		277	3	–	–	RAC277V
		380-480	4	–	–	RAC380-480V

Notes: • The operating voltages of undervoltage tripping devices are as follows:
Tripping voltage: 35% to 70% of rated voltage, closing voltage: 85% to 110% of rated voltage.

*1 Reset-allowed type: When the breaker handle is in the OFF or RESET state, tripping does not occur even if the R coil is not energized.
Turning ON with the R coil not energized causes normal tripping.

*2 Reset-prohibited type: When the R coil is not energized, reset operation cannot reset the tripped breaker to the OFF state.

Earth Leakage Circuit Breakers
G-TWIN series Internal accessories

■ Lead wire specification

AF		Pole	wire size	Wire length
32 to 100AF	Standard	2P, 3P	0.4mm^2 (AWG22)	Ca 500mm
	Global		0.5mm^2 (AWG20)	
125 to 250AF		2P, 3P	0.5mm^2 (AWG20)	
		4P		
400 to 800AF		2P, 3P	0.5mm^2 (AWG20)	Ca 500mm
		4P		Ca 400 to 450mm

■ Terminal blocks

32AF, 50AF, 63AF, 100AF

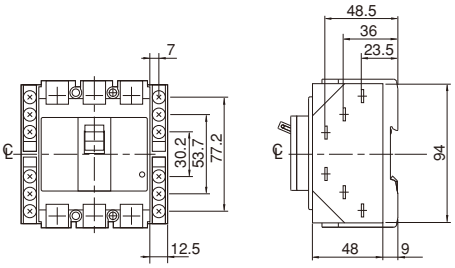

125AF, 160AF, 250AF

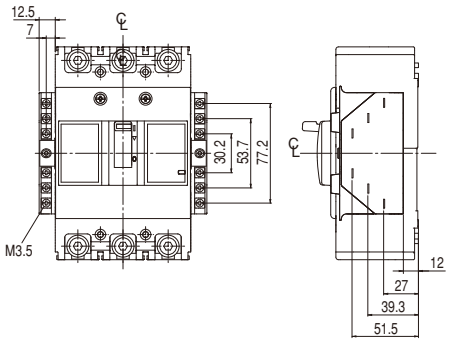

400AF, 630AF, 800AF

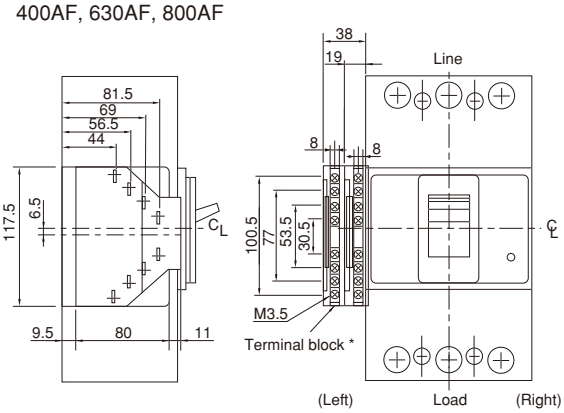

Notes:
* If the chosen combination has more than 8 terminals, 2 terminal blocks are mounted.
• Mount the terminal block on the surface on which the accessories are mounted.
See the table of the combinations of internal accessories on pages B1-154.
for information on the accessory mounting position.
• Available wire: Solid wire: 1.6ø Stranded wire: 2mm^2
• Terminal blocks are available as factory mounted only.

■ Undervoltage trip device, Shunt trip device

32AF, 50AF, 63AF, 100AF

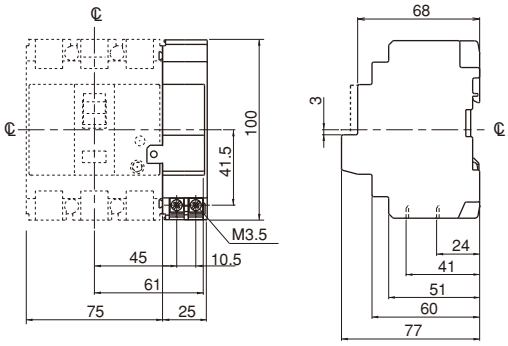

Mass: 0.15kg

Fuji Electric FA Components & Systems Co., Ltd.
Information subject to change without notice

■ Type number

Internal accessories (Sold separately)

• 32, 50, 63, 100AF IEC/EN/GB/JIS conformed

Accessory	Type				Operating voltge
	Lead wire system		Terminal block system		
	Left side	Right side	Left side	Right side	
Auxiliary switch	**BZ6WL10C**	**BZ6WR10C**	**BZ6WL10CA**	**BZ6WR10CA**	
Auxiliary switch (low level circuit)	**BZ6WDL10C**	**BZ6WDR10C**	**BZ6WDL10CA**	**BZ6WDR10CA**	
Alarm switch	**BZ6KL10C**	**BZ6KR10C**	**BZ6KL10CA**	**BZ6KR10CA**	
Alarm switch (low level circuit)	**BZ6KDL10C**	**BZ6KDR10C**	**BZ6KDL10CA**	**BZ6KDR10CA**	
Auxiliary switch + Alarm switch	**BZ6WKL10C**	**BZ6WKR10C**	**BZ6WKL10CA**	**BZ6WKR10CA**	
Auxiliary switch + Alarm switch (low level circuit)	**BZ6WDKDL10C**	**BZ6WDKDR10C**	**BZ6WDKDL10CA**	**BZ6WDKDR10CA**	
Shunt trip device				**BZ6F210C**	100V AC 50Hz/100-110V AC 60Hz
				BZ6F110C	110V AC 50Hz/100-127V AC 60Hz
				BZ6F710C	200V AC 50Hz/200-220V AC 60Hz
				BZ6F410C	220V AC 50Hz/220-240V AC 60Hz
				BZ6F510C	230V AC 50Hz/230-240V AC 60Hz
				BZ6FB10C	240V AC 50Hz
				BZ6F010C	380V AC 50Hz 380-415V AC 60Hz
				BZ6F810C	400V AC 50Hz 400-440V AC 60Hz
Undervoltage trip device				**BZ6R210C**	100V AC 50Hz/100-110V AC 60Hz
				BZ6R110C	110V AC 50Hz/110-127V AC 60Hz
				BZ6RW10C	200V AC 50Hz/200-220V AC 60Hz
				BZ6R410C	220V AC 50Hz/220-240V AC 60Hz
				BZ6R510C	230V AC 50Hz/230-240V AC 60Hz
				BZ6R810C	240V AC 50Hz
				BZ6R010C	380V AC 50Hz 380-415V AC 60Hz
				BZ6R910C	400V AC 50Hz 400-440V AC 60Hz
				BZ6RF10C	24V DC
				BZ6RT10C	100-110V DC

• 32, 50, 63, 100AF IEC/EN/GB/JIS/UL/CSA conformed

Accessory	Type				Operating voltge
	Lead wire system		Terminal block system		
	Left side	Right side	Left side	Right side	
Auxiliary switch	**BZ6WL10CU**	**BZ6WR10CU**	**BZ6WL10CAU**	**BZ6WR10CAU**	
Auxiliary switch (low level circuit)	**BZ6WDL10CU**	**BZ6WDR10CU**	**BZ6WDL10CAU**	**BZ6WDR10CAU**	
Alarm switch	**BZ6KL10CU**	**BZ6KR10CU**	**BZ6KL10CAU**	**BZ6KR10CAU**	
Alarm switch (low level circuit)	**BZ6KDL10CU**	**BZ6KDR10CU**	**BZ6KDL10CAU**	**BZ6KDR10CAU**	
Auxiliary switch + Alarm switch	**BZ6WKL10CU**	**BZ6WKR10CU**	**BZ6WKL10CA**	**BZ6WKR10CAU**	
Auxiliary switch + Alarm switch (low level circuit)	**BZ6WDKDL10CU**	**BZ6WDKDR10CU**	**BZ6WDKDL10CAU**	**BZ6WDKDR10CAU**	
Shunt trip device	–	–	–	**BZ6F210CAU**	100V AC 50Hz/100-110V AC 60Hz
	–	–	–	**BZ6F710CAU**	200V AC 50Hz/200-220V AC 60Hz
	–	–	–	**BZ6F810CAU**	400V AC 50Hz/400-440V AC 60Hz
Undervoltage trip device	–	–	–	**BZ6R210CAU**	100V AC 50Hz/100-110V AC 60Hz
	–	–	–	**BZ6RW10CAU**	110V AC 50Hz/110-127V AC 60Hz
	–	–	–	**BZ6R910CAU**	200V AC 50Hz/200-220V AC 60Hz

Earth Leakage Circuit Breakers
G-TWIN series Internal accessories

• 125, 160, 250AF IEC/EN/GB/JIS/UL/CSA conformed

Accessory	Type				Operating voltge
	Lead wire system		Terminal block system		
	Left side	Right side	Left side	Right side *	
Auxiliary switch	**BW9W1SG0**	**BW9W1SG0-R**	**BW9W1SG0-A**	–	–
Auxiliary switch (low level circuit)	**BW9W1DG0**	**BW9W1DG0-R**	**– ***		
Alarm switch	**BW9K1SG0**	**BW9K1SG0-R**	**BW9K1SG0-A**		
Alarm switch (low level circuit)	**BW9K1DG0**	**BW9K1DG0-R**	**– ***		
Auxiliary switch + Alarm switch	**BW9WKSG0**	**BW9WK1SG0-R**	**BW9WKSG0-A**		
Auxiliary switch + Alarm switch (low level circuit)	**BW9WKDG0**	**BW9WK1DG0-R**	**– ***		
Earth alarm switch	–	**BW9L1SGA**	–		
Shunt trip device	**BW9FRG0**	**BW9FRG0**	**BW9FRG0-A**		24V AC/DC
	BW9FSG0	**BW9FSG0**	**BW9FSG0-A**		48V AC/DC
	BW9FAG0	**BW9FAG0**	**BW9FAG0-A**		100-120V AC/100-110V DC
	BW9F1G0	**BW9F1G0**	**BW9F1G0-A**		120-130V AC
	BW9FKG0	**BW9FKG0**	**BW9FKG0-A**		200-240V AC/200-220V DC
	BW9FBG0	**BW9FBG0**	**BW9FBG0-A**		277V AC
	BW9FPG0	**BW9FPG0**	**BW9FPG0-A**		380-440V AC
	BW9FHG0	**BW9FHG0**	**BW9FHG0-A**		440-480V AC
	BW9FJG0	**BW9FJG0**	**BW9FJG0-A**		500-550V AC
Undervoltage trip devics	**BW9RGAR**	–	**BW9RGAR-A**		24V DC
	BW9RGAS		**BW9RGAS-A**		48V DC
	BW9RGAL		**BW9RGAL-A**		100-110V DC
	BW9RGA5		**BW9RGA5-A**		125V DC
	BW9RGAA		**BW9RGAA-A**		100-110V AC
	BW9RGAT		**BW9RGAT-A**		110-130V AC
	BW9RGAK		**BW9RGAK-A**		200-240V AC
	BW9RGAB		**BW9RGAB-A**		277V AC
	BW9RGAP		**BW9RGAP-A**		380-415V AC
	BW9RGAH		**BW9RGAH-A**		440-480V AC

Note: * Factory-mounted

• 400, 630, 800AF IEC/EN/GB/JIS/UL/CSA conformed

Accessory	Type		Operating voltge
	Lead wire system	Terminal block system *	
	Left side		
Auxiliary switch x 1	**BW9W1SHA**	–	–
Auxiliary switch x 2	**BW9W2SHA**		
Auxiliary switch (low level circuit) x 1	**BW9W1DHA**		
Auxiliary switch (low level circuit) x 2	**BW9W2DHA**		
Alarm switch x 1	**BW9K1SHA**		
Alarm switch x 2	**BW9K2SHA**		
Alarm switch (low level circuit) x 1	**BW9K1DHA**		
Alarm switch (low level circuit) x 2	**BW9K2DHA**		
Shunt trip device	**BW9FHA-R**		24-48V AC/DC
	BW9FHA-A		100-240V AC/100-220V DC
	BW9FHA-B		277V AC
	BW9FHA-P		380-550V AC
Undervoltage trip devics	**BW9RHA-R**		24V AC/DC
	BW9RHA-S		48V AC/DC
	BW9RHA-A		100-110 AC/DC
	BW9RHA-1		120-130V AC/125V DC
	BW9RHA-K		200-240V AC/200-220V DC
	BW9RHA-B		277V AC
	BW9RHA-P		380-480V AC

Note: * Factory-mounted

Motor-operated breakers

■ Description

The breaker is fitted with a motor operating mechanism which enables ON, OFF and RESET operations to be carried out electronically by remote control.

The breakers do not conform to IEC and EN standard.

■ Type and ratings

ELCB type	Motor rating			Power source capacity	Mass (kg)
	Operating voltage	Operating time	Time rating		
EW32□-3P□M, EW50□-3P□M, EW63□-3P□M, EW100□-2P□M, EW100□-3P□M	100V DC 100/110V AC 200/220V AC	0.1s	15s per on-off operation	500VA	1.2 1.3

■ Ordering information

Specify the following:
1. Type number
2. Motor operating voltage

■ Dimensions, mm / Front mounting, front connection

EW32□-3P, EW50□-3P, EW63□-3P, EW100□-2P, EW100□-3P

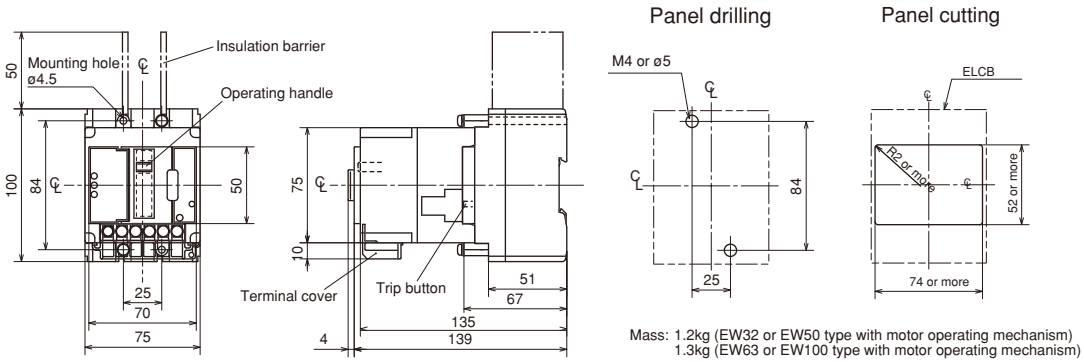

Mass: 1.2kg (EW32 or EW50 type with motor operating mechanism)
1.3kg (EW63 or EW100 type with motor operating mechanism)

Notes: • Trip button operation can be carried out at right side of the breaker.
• IEC 35mm wide mounting rail is not available.

■ Wiring diagrams

100/110V AC, 200/220V AC, 100V DC

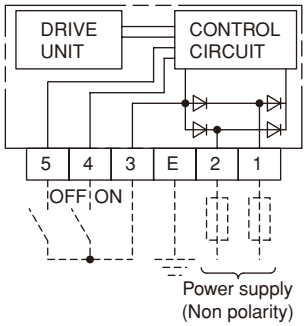

Earth leakage Circuit Breakers
G-TWIN series External accessories

Mechanical interlocking devices

■ Description

These interlocking devices are mounted on the two separate breakers to prevent them from both being closed at the same time.
A sliding mechanism that can be locked with a padlock is used. (The padlock is not included.)
They are designed for use when changing over power supplies.
These can be mounted to 3 types of breakers: front-mounting front-connection type, front-mounting rear-connection type (type X), and plug-in mounting type (type P).
Interlock devices for flush mounting type breakers (type E, Y) are also available.

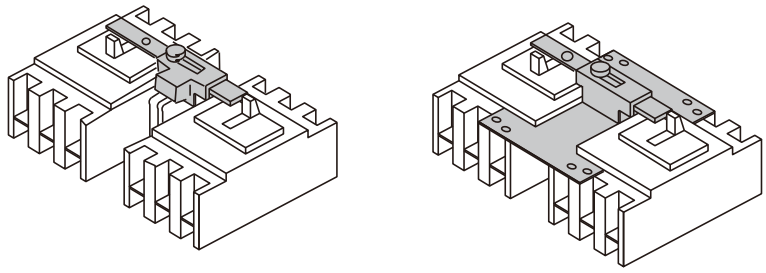

M1 types

■ Type and applicable breakers

Type	Breaker type
BZ6M110C2	EW32AAG-2P, EW50AAG-2P
BZ6M110C3	EW32□-3P, EW50□-3P, EW63□-3P, EW100□-2P, EW100□-3P
BW9M1CA-3	EW125□-3P
BW9M1CA-4	EW125□-4P
BW9M1GA-3	EW250□-3P
BW9M1GA-4	EW250□-4P
BW9M1HA-3	EW400□-3P
BW9M1HA-4	EW400□-4P
BW9M1JA-3	EW630□-3P, EW800□-3P

■ Dimensions, mm

• **32AF to 100AF**

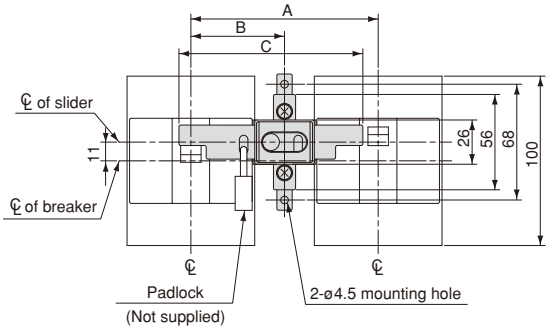

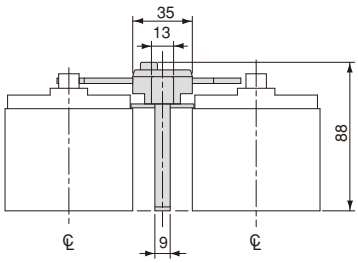

Panel drilling

BZ6M110C2

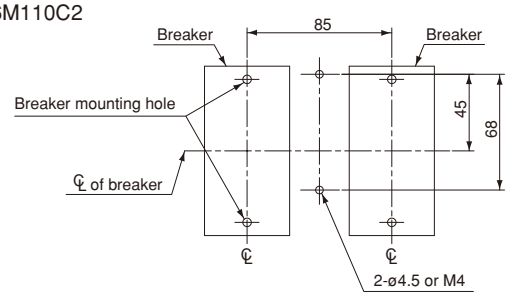

BZ6M110C3

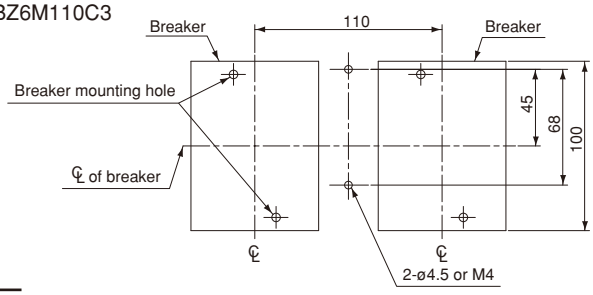

Type	Dimensions, mm A	B	C	Mass (kg)
BZ6M110C2	85	42.5	83	0.11
BZ6M110C3	110	55	108	0.12

Notes: • BZ6M110C2 is not available for padlock.
• Applicable padlock(ø3.5) dimensions, mm
• External installation forms F and R are not applicable to the ELCB on the left of the diagram.

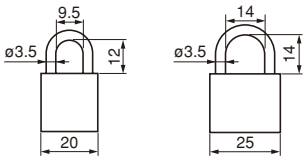

Earth leakage Circuit Breakers
G-TWIN series External accessories

■ Dimensions, mm

• **125AF to 250AF**

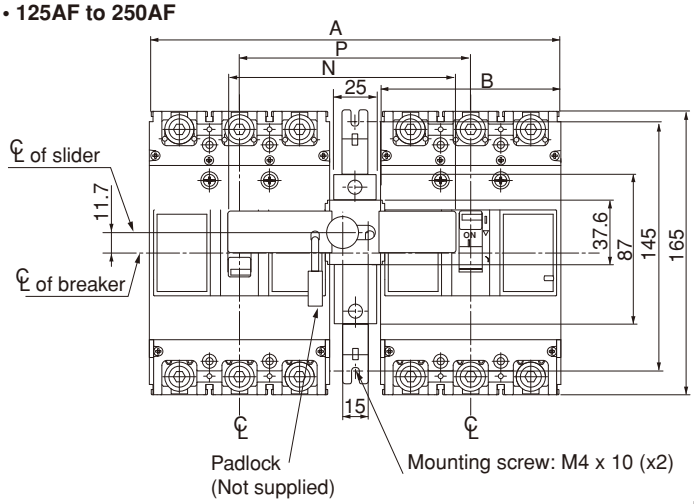

Panel drilling

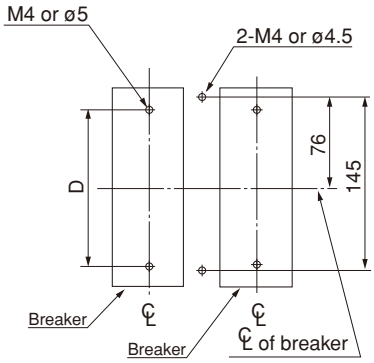

Fig.1

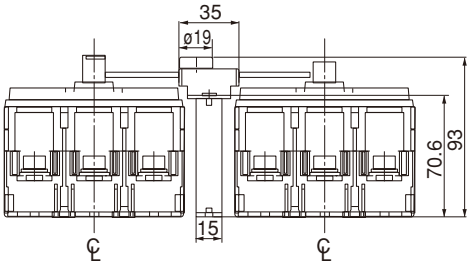

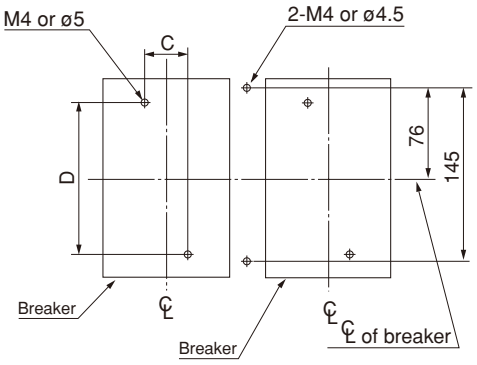

Fig.2

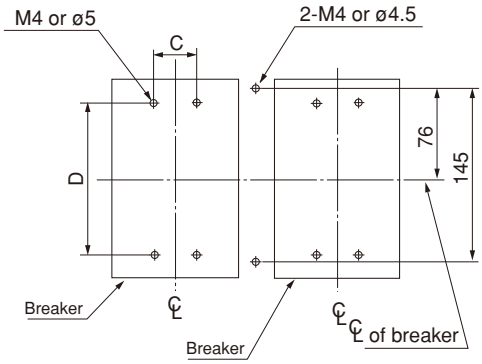

Fig.3

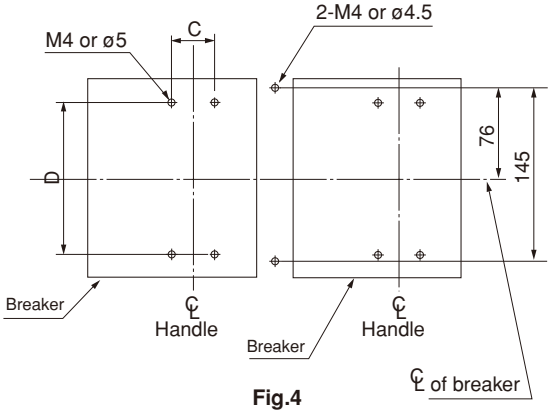

Fig.4

Type	Dimensions, mm						Panel Drilling	Mass(Kg)
	P	N	A	B	C	D		
BW9M1CA-2	90	88	150	60	–	132	Fig.1	
BW9M1CA-3	120	118	210	90	30	132	Fig.2	
BW9M1CA-4	150	148	270	102	30	132	Fig.4	
BW9M1GA-3	135	133	240	105	35	126	Fig.3	
BW9M1GA-4	170	168	310	140	35	126	Fig.4	

Notes: • The dimensions and Breaker mounting holes for back surface mounting are different from those given above. Inquire for details.
• If a padlock is required, use a commercially available padlock with the dimensions shown in the diagram at the right.
• External installation forms F and R are not applicable to the ELCB on the left of the diagram.

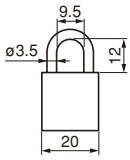

■ Dimensions, mm

• 400AF to 800AF

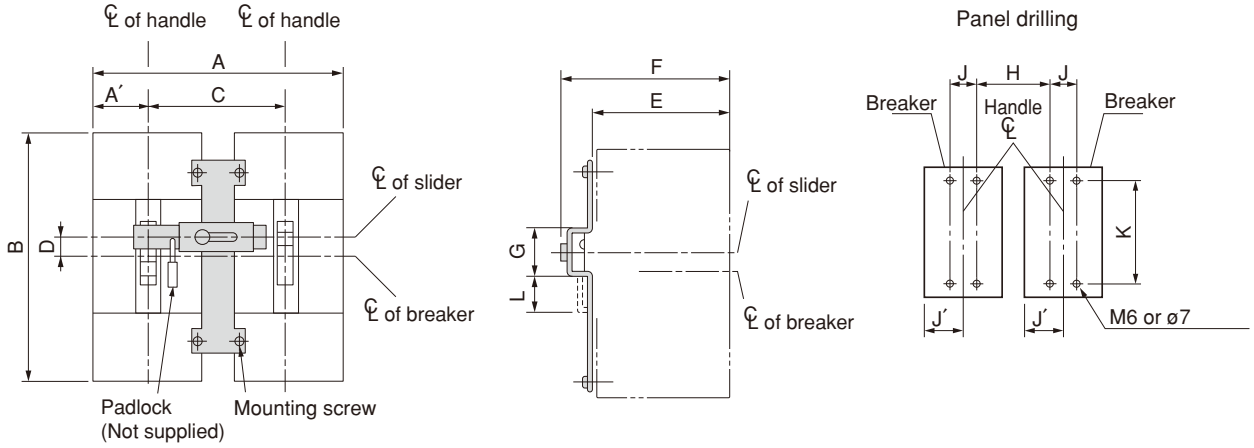

Type	Dimensions, mm											Mass(Kg)
	A (A')	B	C	D	E	F	G	H	J (J')	K	L	
BW9M1HA-3	355 (70)	257	215	20	94.5	132.5	54.5	171	44 (70)	215	38	
BW9M1HA-4	470 (140)	257	260	20	94.5	132.5	54.5	216	44 (140)	215	38	
BW9M1JA-3	500 (105)	275	290	20	94.5	132.5	54.5	220	70 (105)	243	38	

Notes: • The dimensions and Breaker mounting holes for back surface mounting are different from those given above. Inquire for details.
• If a padlock is required, use a commercially available padlock with the dimensions shown in the diagram at the right.
• External installation forms F and R are not applicable to the ELCB on the left of the diagram.

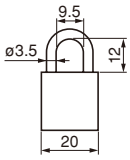

Earth leakage Circuit Breakers
G-TWIN series External accessories

External operating handles

■ Description

Molded case circuit breaker handles are generally directly manual-operated but when mounted in motor control centers or on control panels they are sometimes required to be operated externally. To meet such applications FUJI offers the following three types of handles.

N type handle
This type has a knob handle directly attached to the breaker. It is easily fitted by cutting a hole in the panel, which is provided with a door interlock. They may be fitted to all breakers up to 800 ampere frame sizes.
Conformed to EN60947-1 isolation function.
Available for EN60204-1 power breaking device.
Conformed to UL489 (File No.E93289)

V type handle
The V type handle may be fitted to breakers of up to 800AF.
A separately sold extension shaft provides distance adjustment between the handle and breaker.
Conformed to EN60947-1 isolation function.
Available for EN60204-1 power breaking device.
Conformed to UL489 (File No.E93289)

F type handle
The F type handle may be fitted to breakers of 125 to 400AF.
It is a flange type handle, which is commonly used in the North American market.
The drive section of the breaker and the external operating handle are connected with an optional cable.
Positioning between the breaker and the external operating handle is not required.

Conformed to UL489 (File No.E93289)

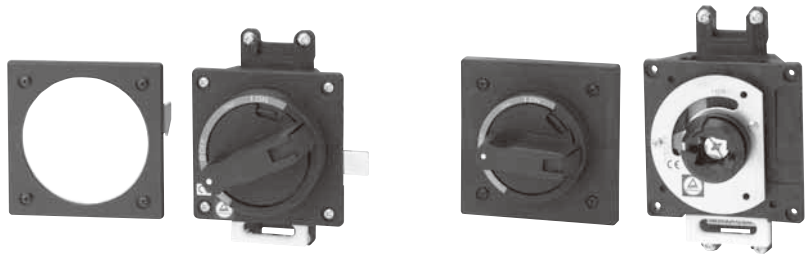

BW9N0CA
N type handles

BW9V0CA
V type handle

N type handles

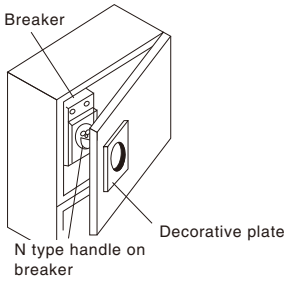

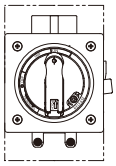

V type handles

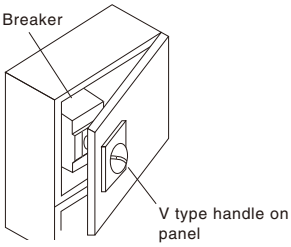

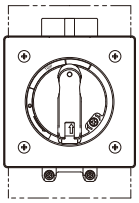

F type handles

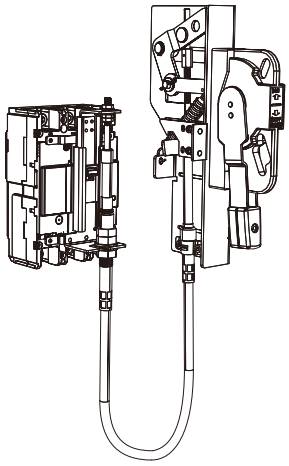

N type handles

ELCB	N type handle
EW32 EW50 EW63 EW100	**BZ6N10D**
EW125	**BW9N0CA**
EW160 EW250	**BW9N0GA**
EW400	**BW9N0HA**
EW630 EW800	**BW9N0JA**

V type handles

ELCB	V type handle
EW32 EW50 EW63 EW100	**BZ6V10D**
EW125	**BW9V0CA**
EW160 EW250	**BW9V0GA**
EW400	**BW9V0HA**
EW630 EW800	**BW9V0JA**

F type handles

ELCB	F type handle
EW125	**BW9F0CA**
EW250	**BW9F0GA**
EW400	**BW9F0HA**

■ Type number nomenclature

• N type handle

BW9N0CA – □

- **Mounting** (For BZ6N10D, BW9N0HA, BW9N0JA)
  - Blank: Front mounting, front connection
  - X: Front mounting, rear connection
  - P: Plug-in mounting
- **Basic type**

• V type handle

BW9V0CA – □

- **Mounting** (For BZ6V10D, BW9V0HA, BW9V0JA)
  - Blank: Front mounting, front connection
  - X: Front mounting, rear connection
  - P: Plug-in mounting
- **Basic type**

Note:
To order a V handle for front-mounting rear connection breakers, add “-X” to the type number; for plug-in mounting breakers, add “-P” to the type number.

• F type handle

BW9F0 □ A

- **Breaker type**
  - C: EW125□U
  - G: EW250□U
  - H: EW400□U
- **Basic type**

Cable (For F type)

BW9FW □ A – □ A

- **Cable length**
  - 15: 1.5m
  - 20: 2.0m
  - 30: 3.0m
- **Breaker type**
  - C: EW125□U
  - G: EW250□U
  - H: EW400□U
- **Basic type**

Terminal cover (For F type)

BW9FBT □ A – L3

- **Breaker type**
  - C: EW125□U
  - G: EW250□U
  - H: EW400□U
- **Basic type**

Earth leakage Circuit Breakers
G-TWIN series External accessories

■ Dimensions, mm

N type handle

• **BZ6N10D**

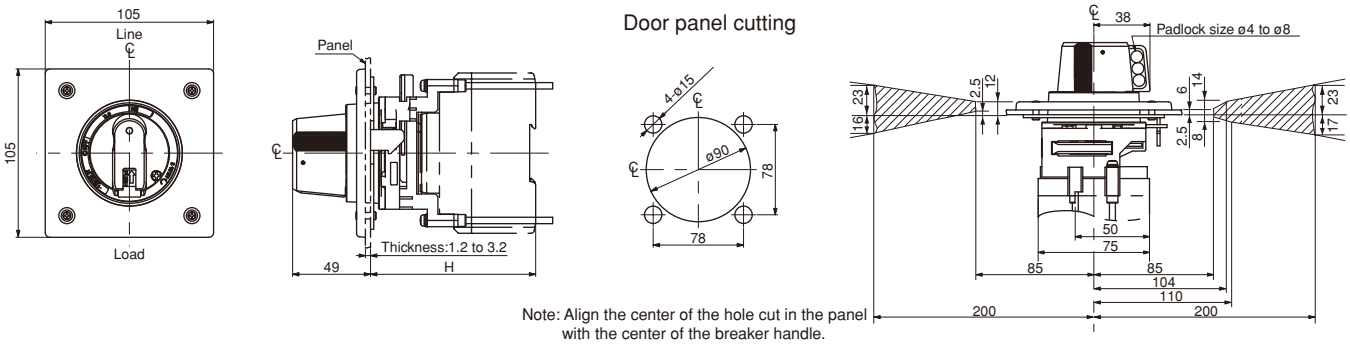

Note: Align the center of the hole cut in the panel with the center of the breaker handle.

Install the hinge in the shaded area.

ELCB	Handle type	Dust proof packing	Mounting screw	H (mm)	Mass (kg)
EW32	**BZ6N10D**	Provided	M4 x 85	103±2	0.47
EW50	**BZ6N10D-X**	Provided	Contact FUJI.	111±2	
EW63	**BZ6N10D-P**			111±2	
EW100					

• **BW9N0CA, BW9N0GA**

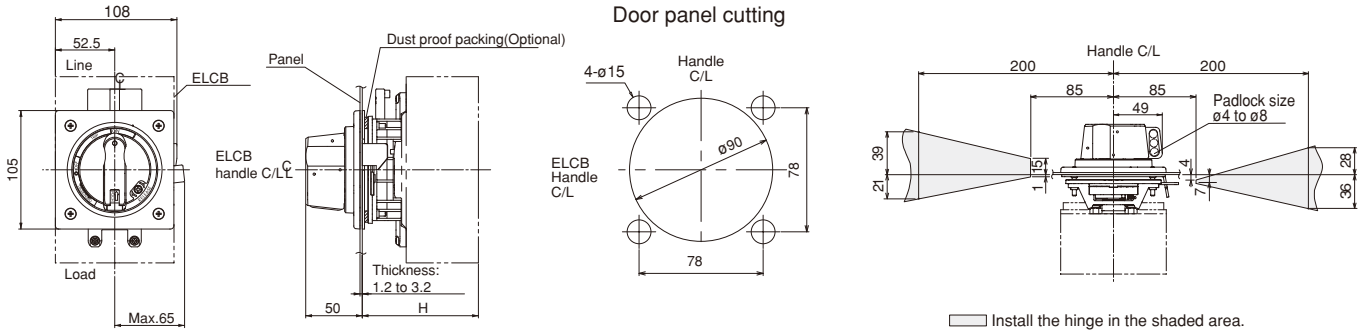

Install the hinge in the shaded area.

Note: Align the center of the hole cut in the panel with the center of the breaker handle.

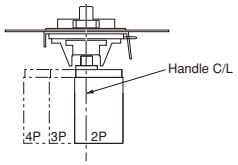

ELCB	Handle type	Dust proof packing	Mounting screw	H (mm)	Mass (kg)
EW125	**BW9N0CA**	BZ-NP-1C	M4 x 85	103±2	0.56
EW160	**BW9N0GA*1**	BZ-NP-1C	M4 x 85	103±2	0.56
EW250					

Notes: • The handle lock bars do not hold the entire door. Obtain a support bracket for the panel separately.
• Remove the handle lock bar before opening the door. (Turn the handle in the open direction.)
The lock bar will be damaged if the door is opened with force while the lock bar is engaged.
• Engage the door interlock securely before turning ON the power.
*1 The terminal cover will cover the mounting screws for the Breaker. When attaching the terminal cover, a portion of the terminal cover will need to be removed.
Remove portion ▨ in the following diagram.

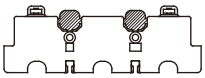

Fuji Electric FA Components & Systems Co., Ltd.
Information subject to change without notice

• **BW9N0HA, BW9N0JA**

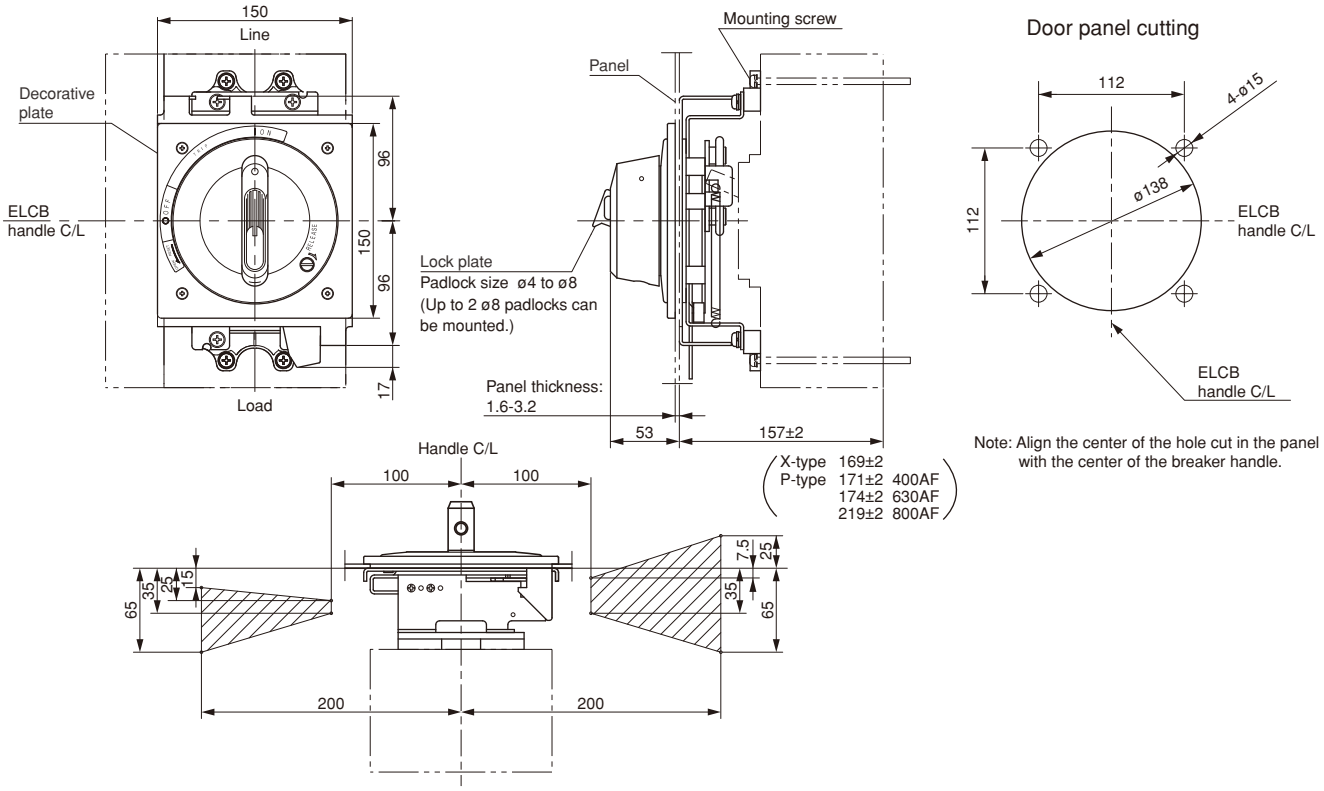

Note: Align the center of the hole cut in the panel with the center of the breaker handle.

Install the door hinge in the shaded area.

ELCB	Handle type	Dust proof packing	Mounting screw	Mass (kg)
EW400	**BW9N0HA** **BW9N0HA-X** **BW9N0HA-P**	BZ-NP-2	M6 x 110 M6 x 115 Contact FUJI.	1.9
EW630 EW800	**BW9N0JA** **BW9N0JA-X** **BW9N0JA-P**	BZ-NP-2	M6 x 110 M6 x 115 Contact FUJI.	1.9

Notes:
- The handle lock bars do not hold the entire door. Obtain a support bracket for the panel separately.
- Remove the handle lock bar before opening the door. (Turn the handle in the open direction.)
  The lock bar will be damaged if the door is opened with force while the lock bar is engaged.
- Engage the door interlock securely before turning ON the power.
- Not available for side mounting.

Earth leakage Circuit Breakers
G-TWIN series External accessories

■ Dimensions, mm

V type handle

• **BZ6V10D**

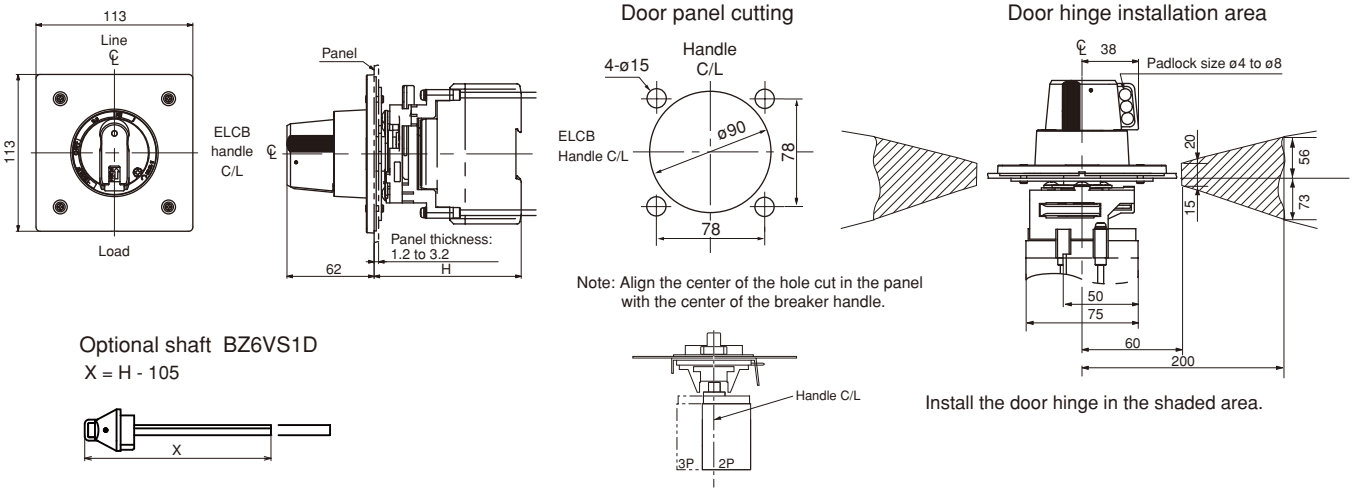

• **BW9V0CA, BW9V0GA**

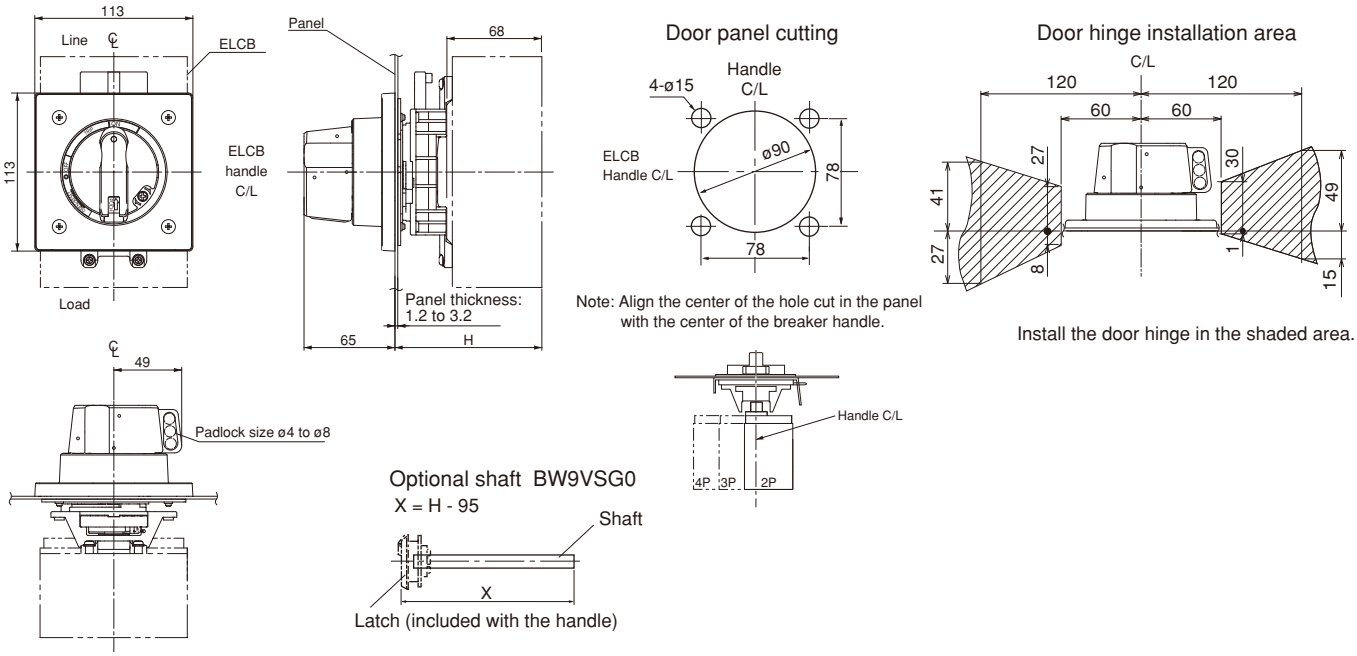

Fuji Electric FA Components & Systems Co., Ltd.
Information subject to change without notice

Earth leakage Circuit Breakers
G-TWIN series External accessories

ELCB	Handle type	Optional shaft	Standard type H	With the optional shaft (X=154)		Mounting screw	Mass (kg)
				H	Area in which the hinge with H can be installed		
EW32 EW50 EW63 EW100	**BZ6V10D**	**BZ6VS1D**	105±2	250±2	140 to 250	M4 x 80	0.64
	BZ6V10D-X		113±2	258±2	150 to 258	Contact FUJI.	0.64
	BZ6V10D-P		113±2	258±2	150 to 258	Contact FUJI.	0.64
EW125	**BW9V0CA**	**BW9VSG0**	105±2	250±2	140 to 250	M4 x 85	0.67
EW160 EW250	**BW9V0GA***1		105±2	250±2	140 to 250	M4 x 85	0.67

Notes:
- The handle lock bars do not hold the entire door. Obtain a support bracket for the panel separately.
- Remove the handle lock bar before opening the door. (Turn the handle in the open direction.)
  The lock bar will be damaged if the door is opened with force while the lock bar is engaged.
- Engage the door interlock securely before turning ON the power.
- Not available for side mounting.

*1 The terminal cover will cover the mounting screws for the Breaker. When attaching the terminal cover, a portion of the terminal cover will need to be removed. Remove portion A in the following diagram.

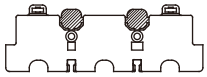

Earth leakage Circuit Breakers
G-TWIN series External accessories

• **BW9V0HA, BW9V0JA**

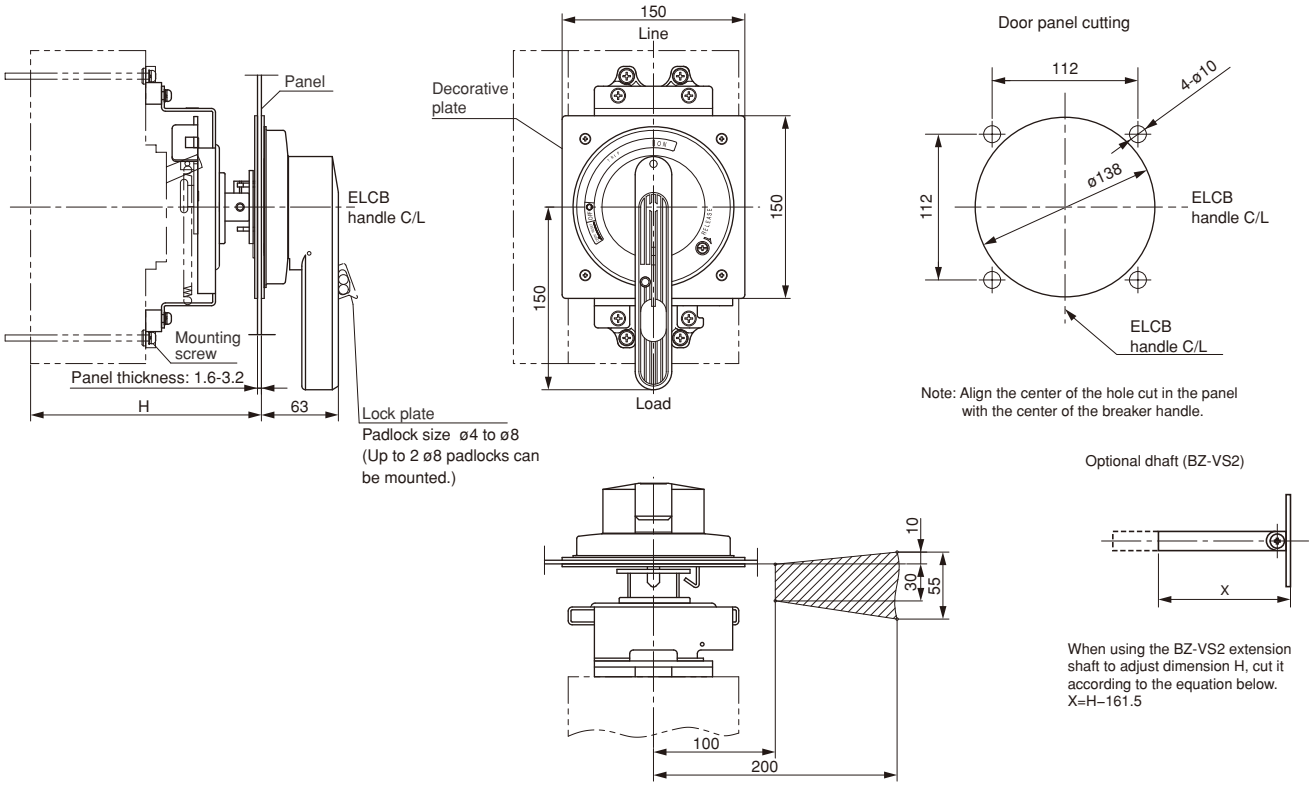

Install the door hinge in the shaded area.

ELCB	Handle type	Optional shaft	Standard type H	With the optional shaft (X=154)		Mass (kg)
				H	Area in which the hinge with H can be installed	
EW400	**BW9V0HA**	**BZ-VS2**	190±2	250±2	202 to 250	2.2
	BW9V0HA-X		202±2	262±2	214 to 262	
	BW9V0HA-P		204±2	264±2	216 to 264	
EW630	**BW9V0JA**		190±2	250±2	202 to 250	
	BW9V0JA-X		202±2	262±2	214 to 262	
	BW9V0JA-P		207±2	267±2	219 to 269	
EW800	**BW9V0JA**		190±2	250±2	202 to 250	
	BW9V0JA-X		202±2	262±2	214 to 262	
	BW9V0JA-P		252±2	312±2	264 to 312	

Notes: • The handle lock bars do not hold the entire door. Obtain a support bracket for the panel separately.
• Remove the handle lock bar before opening the door. (Turn the handle in the open direction.)
The lock bar will be damaged if the door is opened with force while the lock bar is engaged.
• Engage the door interlock securely before turning ON the power.
• Not available for side mounting.

■ Dimensions, mm

F type handle

• **BW9F0CA**

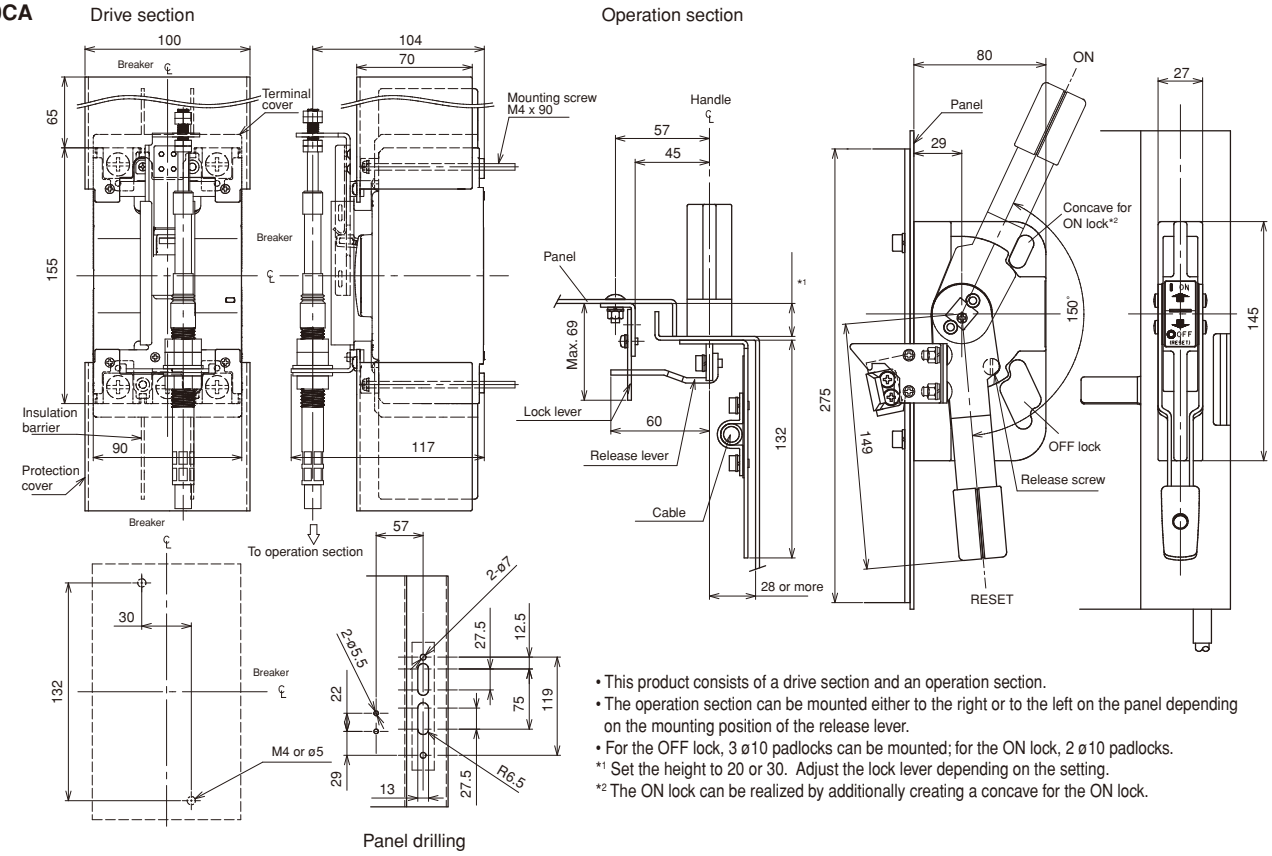

• This product consists of a drive section and an operation section.
• The operation section can be mounted either to the right or to the left on the panel depending on the mounting position of the release lever.
• For the OFF lock, 3 ø10 padlocks can be mounted; for the ON lock, 2 ø10 padlocks.
*1 Set the height to 20 or 30. Adjust the lock lever depending on the setting.
*2 The ON lock can be realized by additionally creating a concave for the ON lock.

• **BW9F0GA**

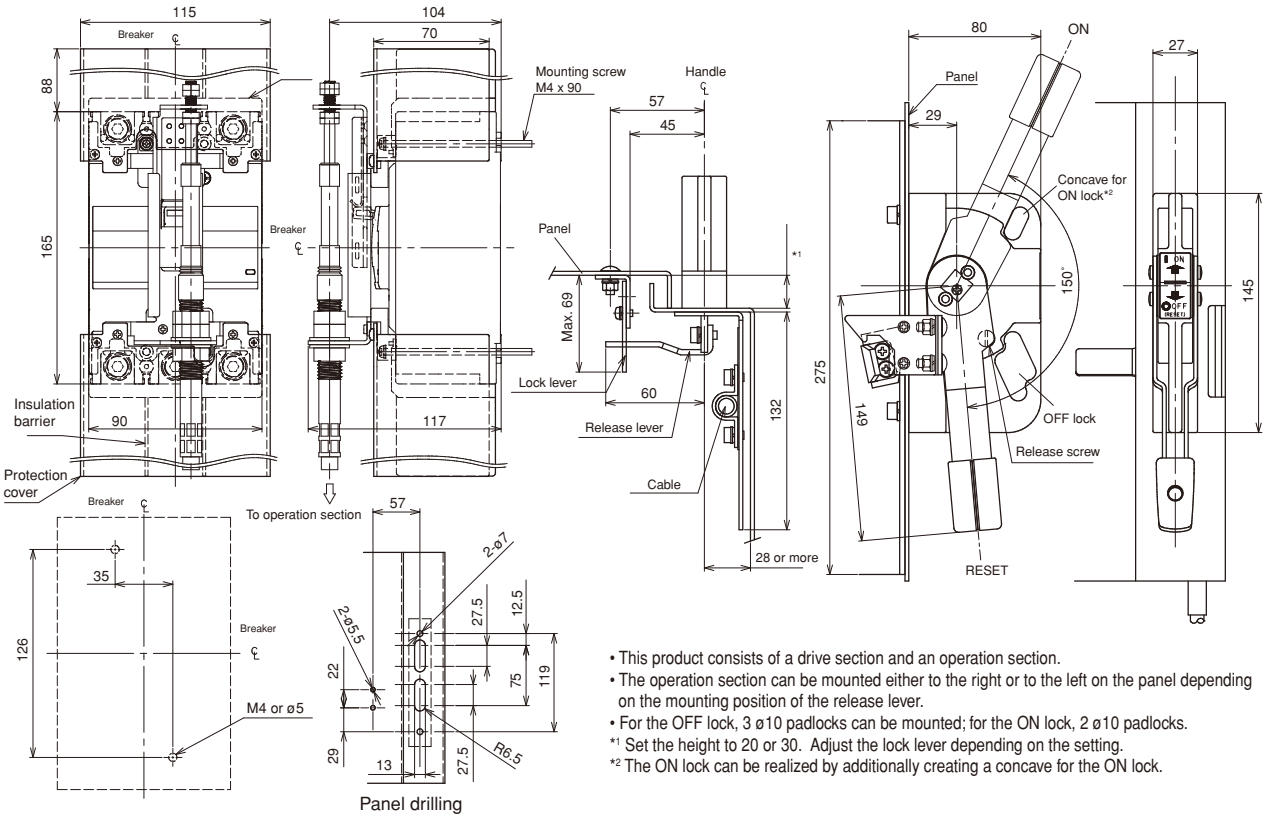

• This product consists of a drive section and an operation section.
• The operation section can be mounted either to the right or to the left on the panel depending on the mounting position of the release lever.
• For the OFF lock, 3 ø10 padlocks can be mounted; for the ON lock, 2 ø10 padlocks.
*1 Set the height to 20 or 30. Adjust the lock lever depending on the setting.
*2 The ON lock can be realized by additionally creating a concave for the ON lock.

Earth leakage Circuit Breakers
G-TWIN series External accessories

• **BW9F0HA**

Drive section

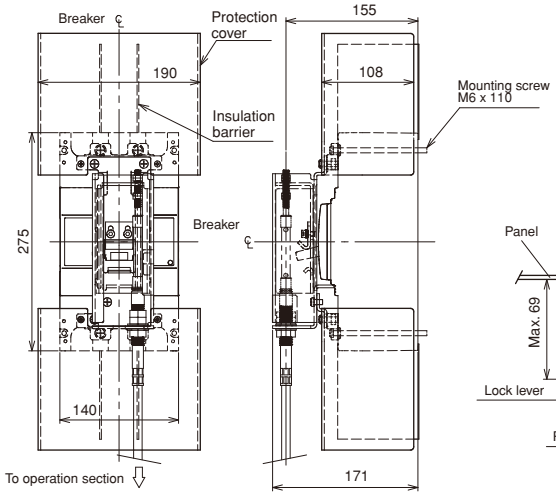

Operation section

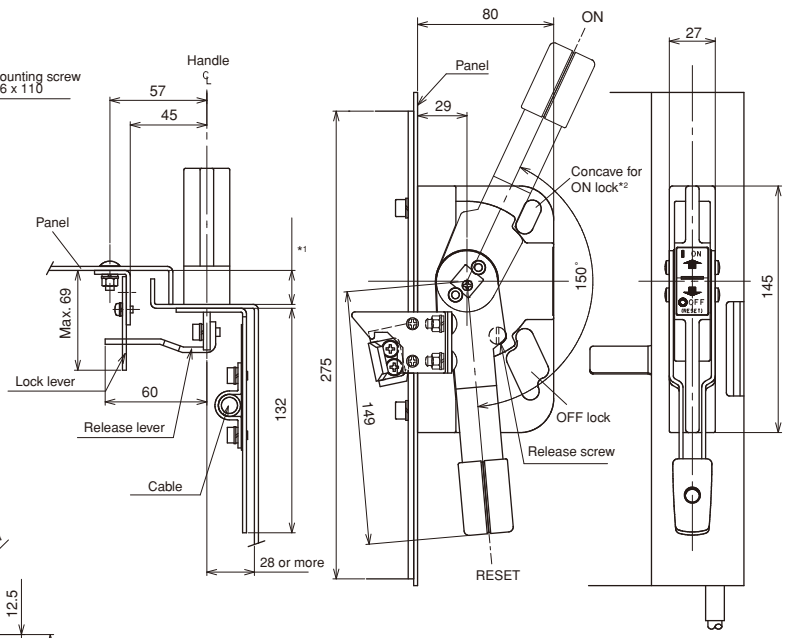

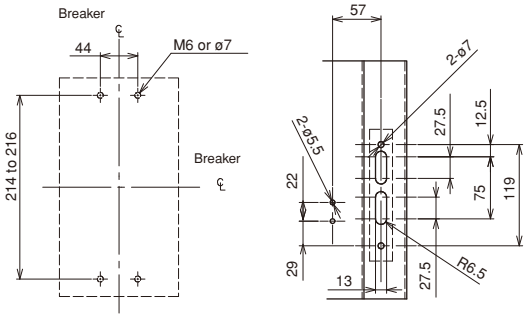

Panel drilling

• This product consists of a drive section and an operation section.
• The operation section can be mounted either to the right or to the left on the panel depending on the mounting position of the release lever.
• For the OFF lock, 3 ø10 padlocks can be mounted; for the ON lock, 2 ø10 padlocks.
*1 Set the height to 20 or 30. Adjust the lock lever depending on the setting.
*2 The ON lock can be realized by additionally creating a concave for the ON lock.

ELCB *	Handle type	Cable		Terminal cover
		Type	Length (m)	
EW125JAGU-3P EW125RAGU-3P	**BW9F0CA**	**BW9FWCA-15A** **BW9FWCA-20A** **BW9FWCA-30A**	1.5 2.0 3.0	**BW9FBTCA-L3**
EW250JAGU-3P EW250RAGU-3P	**BW9F0GA**	**BW9FWGA-15A** **BW9FWGA-20A** **BW9FWGA-30A**	1.5 2.0 3.0	**BW9FBTGA-L3**
EW400SAGU-3P EW400RAGU-3P EW400HAGU-3P	**BW9F0HA**	**BW9FWHA-15A** **BW9FWHA-20A** **BW9FWHA-30A**	1.5 2.0 3.0	**BW9FBTHA-L3**

Note: * Not available for BW125JAGU-2P

Earth leakage Circuit Breakers
G-TWIN series External accessories

Steel enclosures

■ Description

Steel enclosures are available in three types — two with V-type handle which allows the operation from the outside and other with the operating handle of the breaker extending from it to allow it to be directly switched ON or OFF from outside the enclosure.
Enclosures with V-type handles are provided with a door interlocking mechanism which prevents the door from being opened in the ON condition.
Knockout holes for wiring use are provided as shown in the diagram.

Standard Dustproof Rainproof

■ Type of enclosures

ELCB	Enclosure		
	Standard *1	With V-type handle Dust-proof *1*2	Rain-proof *1*2
EW32 EW50 EW63	**BZ6C10C2 *3** **BZ6C10C3**	**BW9UVBA-3A *3**	**BW9UWBA-3A *3**
EW100	**BZ6C25C2 *3** **BZ6C25C3 *3**	**BW9UVBA-3B *3**	**BW9UWBA-3B *3**
EW125	**BW9UCCA-2** **BW9UCCA-3**	**BW9UVCA-3**	**BW9UWCA-3**
EW250	**BW9UCGA-3**	**BW9UVGA-3**	**BW9UWGA-3**
EW400	**BZ-C60B**	**BW9UVHA-3**	**BW9UWHA-3**
EW630 EW800	**BZ-C70B**	**BW9UVJA-3**	**–**

*1 No models are available for four-pole products.
*2 The appearance of dust-proof and rain-proof models differs from the photograph (400A frames and higher).
*3 Combination with external accessories(R) is not possible.

■ Ordering information

Specify the following:
1. Type number of enclosures

Earth leakage Circuit Breakers
G-TWIN series External accessories

■ Dimensions, mm

Fig.1 Standard

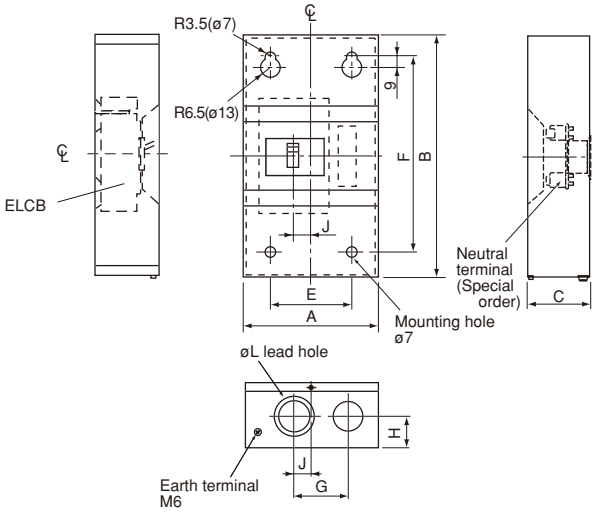

Fig.2 With V type handle
BW9UVBA-3A, BW9UVBA-3B
BW9UVCA-3, BW9UVGA-3

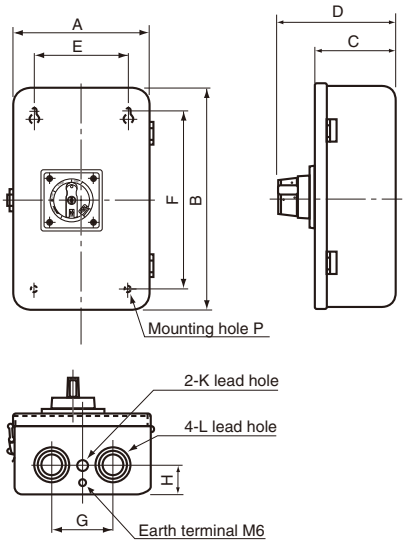

Fig3. With V type handle
BW9UVHA-3, BW9UVJA-3

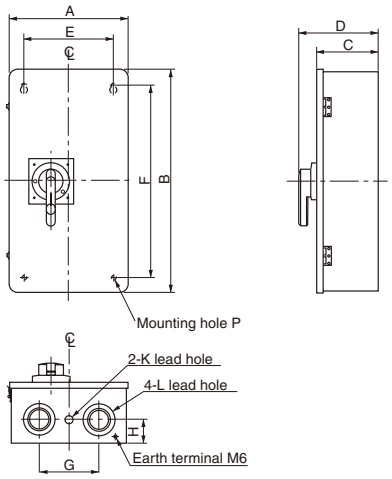

■ Connection method diagrams

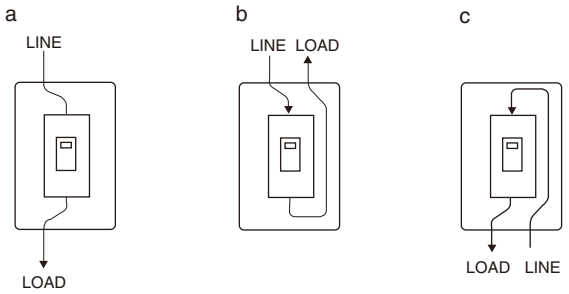

Type	Connection	Fig.	A	B	C	D	E	F	G	H	J	K	L	P
BZ6C10C2	a, b, c	1	135	225	95	–	90	170	65	40	25	–	ø35, ø22	–
BZ6C10C3														
BZ6C25C3			200	320	95	–	120	240	80	40	25	–	ø45, ø30	–
BW9UCCA-3			200	320	103	–	120	240	80	40	25	–	ø45, ø30	–
BW9UCGA-3				360				280		45			ø55, ø40	
BZ-C60B			400	750	175	–	300	650	200	80	100	–	ø106, ø78, ø63	–
BZ-C70B														
BW9UVBA-3A		2	180	300	114	178.5	100	220	70	40	–	–	ø28, ø35, ø43	ø7
BW9UVBA-3B			250	400	142	206.5	170	320	110	50	–	ø23	ø35, ø52, ø63	ø9
BW9UVCA-3						207								
BW9UVGA-3														
BW9UVHA-3		3	400	750	206	269	300	650	200	80	–	ø28	ø63, ø78, ø106	ø12
BW9UVJA-3														

Fuji Electric FA Components & Systems Co., Ltd.
Information subject to change without notice

Terminal covers

■ Description

These terminal covers are used as guards to prevent accidental touch with live line terminations.
These terminal covers can be fitted to either line or load side.

● Up to 400AF
Short type: BW9BT □ A-S □
- Snap-on fitting

Long type: BW9BT □ A-L □
- Crimp connection use

● 630, 800AF
Long type: BW9BTJA-L □
- Transparent

Short type

Long type

Long type

Type		No. of poles	ELCB	Dimensions (mm)			Packing quantity	Appearance
Transparent	Gray			A	B	C		
BW9BTAA-L2	**BW9BTAA-L2W**	2	EW32□-2P EW50□-2P	50	40	53	2	• Preventing exposure of live section when amplifier's terminals are connected • Snap-on mounting
BW9BTAA-L3	**BW9BTAA-L3W**	2, 3	EW32□-3P EW50□-3P EW63□-3P EW100□-2P EW100□-3P	75	40	53	2	
BW9BTCA-L3	**BW9BTCA-L3W**	3	EW125□-3P	90	40	66.5	2	
BW9BTCA-C3 (For Flat terminal)	**–**	3	EW125□-3P	90	60	66.5	2	
BW9BTCA-L4	**BW9BTCA-L4W**	4	EW125□-4P	120	40	66.5	2	
BW9BTGA-L3 *1	**BW9BTGA-L3W *1**	3	EW160□-3P EW250□-3P	105	50	66.5	2	
BW9BTGA-L4 *1	**BW9BTGA-L4W *1**	4	EW160□-4P EW250□-4P	140	50	66.5	2	
BW9BTGA-C3 (For Flat terminal)	**–**	3	BW250□-3P	105	75	66.5	2	
BW9BTHA-L3 *2	**BW9BTHA-L3W *1**	3	EW400□-3P	172	110	98	2	
BW9BTHA-L4 *2	**–**	4	EW400□-4P	220	110	98	2	
BW9BTJA-L3	**BW9BTJA-L3W**	3	EW630□-3P EW800□-3P	230	135	97.5	2	

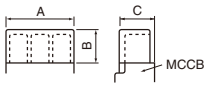

Short type

Type		No. of poles	ELCB	Dimensions (mm)			Packing quantity	Appearance
Transparent	Gray			A	B	C		
BW9BTAA-S2	**BW9BTAA-S2W**	2	EW32□-2P EW50□-2P	50	10	53	2	• Preventing exposure of live section when amplifier's terminals are connected • Snap-on mounting
BW9BTAA-S3	**BW9BTAA-S3W**	2, 3	EW32□-3P EW50□-3P EW63□-3P EW100□-2P EW100□-3P	75	10	53	2	
BW9BTCA-S3	**BW9BTCA-S3W**	3	EW125□-3P	90	8	66.5	2	
BW9BTCA-S4	**BW9BTCA-S4W**	4	EW125□-4P	120	8	66.5	2	
BW9BTGA-S3 *1	**BW9BTGA-S3W *1**	3	EW160□-3P EW250□-3P	105	8	66.5	2	
BW9BTGA-S4 *1	**BW9BTGA-S4W *1**	4	EW160□-4P EW250□-4P	140	8	66.5	2	
BW9BTHA-S3 *3	**BW9BTHA-S3W *2**	2, 3	EW400□-2P EW400□-3P	140	65	98	2	
BW9BTHA-S4 *3	**BW9BTHA-S4W *2**	4	EW400□-4P	185	65	98	2	

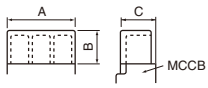

Notes: • A gray-white terminal cover comes standard with the Global Series 125AF and 250AF.
*1 When using the external operating handle, part of the terminal cover (▨) must be cut away.
*2 Crimp terminals for 325 mm² are not available.
*3 This type of cover can be mounted on the 400AF when flat terminals are not used.

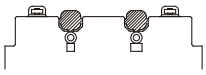

Earth leakage Circuit Breakers
G-TWIN series External accessories

Insulation barriers

■ Description

The interphase barriers are provided on frame size of 32AF to 800AF breakers for front mounting. The barriers are installed in the molded slots between terminals.
The earth barrier is used to increase the insulation with the mounting plate surface when two crimp terminals are wired.
Installation of these barriers after wiring is possible even when an external accessory is installed.

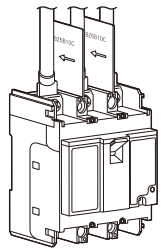

Interphase barrier

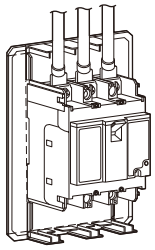

Earth barrier

Interphase barrier

ELCB	Interphase barrier				
	Type	Dimensions (mm)		Packing quantity	Mass (g)
		A	B		
EW32 EW50 EW63 EW100	**BZ6B10C**	50	49	4	23
EW125	**BW9BPCA**	50	60	2	15
EW160 EW250	**BW9BPGA**	80	60	2	25
EW400 EW630 EW800	**B-43A**	105	95	4	130

Interphase barrier

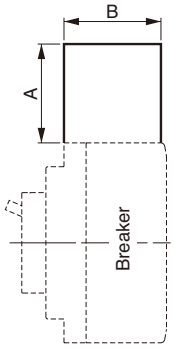

Earth barrier

ELCB	Earth barrier				
	Type	Dimensions (mm)		Packing quantity	Mass (g)
		A	B		
EW32□-2P EW50□-2P	**BZ6BL10C2**	100 (50, 75)*1	43 (30)*1	1	33
EW32□-3P EW50□-3P EW63□-3P EW100□-2P EW100□-3P	**BZ6BL10C3**	125 (75, 100)*1	43 (30)*1	1	41

Note: *1 Can be cut to dimensions

Earth barrier

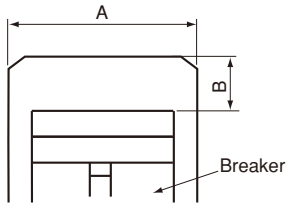

Fuji Electric FA Components & Systems Co., Ltd.
Information subject to change without notice

Padlocking device and handle locking cover

■ Description

• Padlocking device
These padlocking device lock the Breaker handle in the OFF position. Use a commercially available padlock with a shackle diameter of 3.5 to 5mm (5mm for the BZ6L10CA).

• Handle locking covers (Order Separately)
These simple handle locking covers can be easily installed by the user.
Tripping is possible while the Breaker is locked ON.

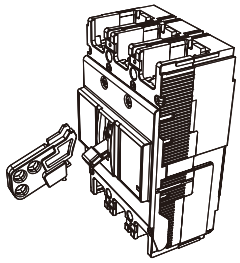

Padlocking device
• Cap type Q1,QN

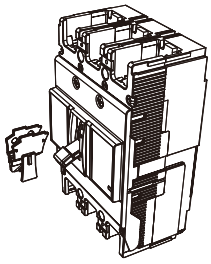

Handle locking cover

ELCB	Padlocking device			Handle locking cover
	Q1: Cap type	QN: Scissors type	Q2: Plate type	
EW32 EW50 EW63 EW100	**BZ6L10CA**	–	▲ *1*3	**BZ6L10C**
EW125 EW160 EW250	**BW9Q1CA** *4		**BW9Q2CA** **BW9Q2GA**	**BW9L1CA**
EW400 EW630 EW800	▲ *1	**BW9QNHA** *2	**BW9Q2HA** **BW9Q2JA**	**BW9L1HA**

Notes:
*1 Specify Locks when ordering the Breaker. (▲: Factory-mounted)
*2 ON and OFF locking is possible.
*3 If a padlock is required, use a commercially available padlock with the dimensions shown in the diagram at the right.
*4 Three padlocks with shackles from 3.5 to 8 mm in diameter can be attached.

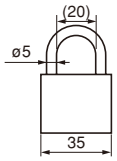

Padlocking device
• Cap type Q1

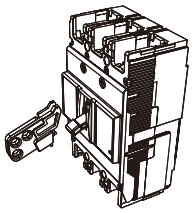

• Plate type Q2

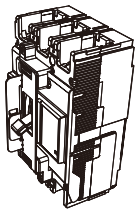

Handle locking cover

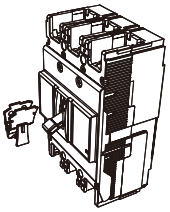

Q1: BZ6L10CA (OFF-locking Padlocking device)

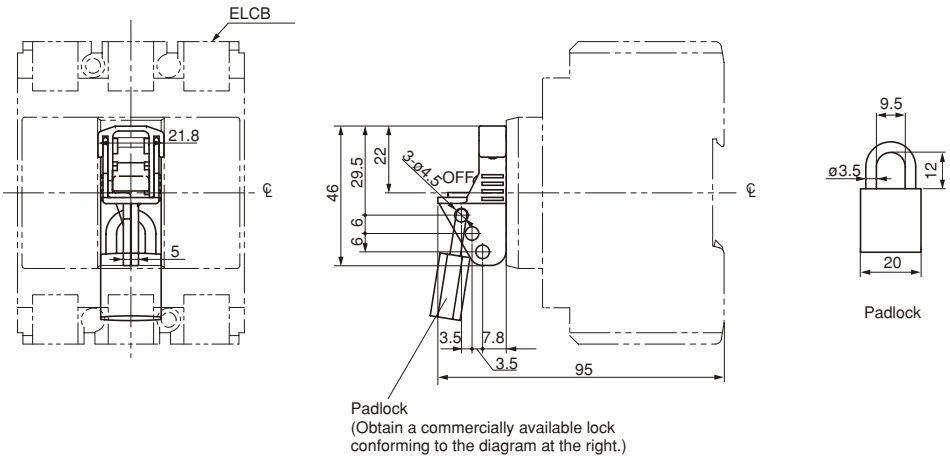

Molded Case Circuit Breakers / Earth Leakage Circuit Breakers G-TWIN Λ (Lambda) Series Type number nomenclature

■ Type Number Nomenclature

● Main unit

EW 50 R B G U - 3P 050 B

Basic type

Symbol	Category
BW	G-TWIN molded case circuit breaker (MCCB)
EW	G-TWIN earth leakage circuit breaker (ELCB)

Frame

Symbol	Frame
32	32AF
50	50AF
63	63AF

Breaking capacity category

Standard product

Symbol	Breaking capacity Icu (JIS/IEC/EN/GB 230 V AC)		
	32AF	50AF	63AF
E	–	7.5kA	7.5kA
S	7.5kA	15kA	15kA

Global product

Symbol	Breaking capacity (UL489 240V AC)
	50AF
R	18kA

Series name

Symbol	Series name
B	G-TWIN Λ (Lambda) Series

Product category

Symbol	Application
G	MCCB/ELCB for line protection use

G-TWIN series

Symbol	Application
Blank	Standard
U	UL489 Listed

Number of poles

Symbol	MCCB
2P	2-pole
3P	3-pole

Rated current

Line protection use

Symbol	Rated current	MCCB	ELCB
003	3A	○	–
005	5A	○	○
010	10A	○	○
015	15A	○	○
020	20A	○	○
030	30A	○	○
032	32A	○	○
040	40A	○	○
050	50A	○	○
060	60A	○	○
063	63A	○	○

Rated sensitive current (specified for ELCB only)

Symbol	Rated sensitive current	Remarks
B	30mA	
D	50mA	Global product only
C	100mA	
E	200mA	
H	500mA	

● Accessory

EW63SBG-3P063B - W K F□ R□ A T

Main unit type

Auxiliary switch

Symbol	Accessory type
W	Standard SPDT
V	Standard 2PDT
1	For low level circuit SPDT
2	For low level circuit 2PDT

Alarm switch

Symbol	Accessory type
K	Standard SPDT
8	For low level circuit SPDT

Shunt trip device

F□ (Specify voltage rating symbol for □)

Symbol	Voltage rating
FR	AC/DC24V
F6	AC100-130V/DC100-110V
FK	AC200-240V/DC200-220V
FP	AC380-440V

Accessory exclusive for ELCB

Symbol	Accessory type
T	Trip lead

Accessory connecting method

Symbol	Accessory type
Blank	Lead wire system
A	Terminal block system

Undervoltage trip device

R□ (Specify voltage rating symbol for □)

Symbol	Accessory type
RR	DC24V
RL	DC100-110V
RZ	AC24V
R6	AC100-130V
R4	AC200-240V
RP	AC380-415V
RO	AC400-440V

Molded Case Circuit Breakers / Earth Leakage Circuit Breakers G-TWIN Λ (Lambda) Series Specifications

■ Molded Case Circuit Breakers for Line Protection Use (Standard Products)

Ampere frame				32		50				63			
Type				**BW32SBG**		**BW50EBG**		**BW50SBG**		**BW63EBG**		**BW63SBG**	
Appearance				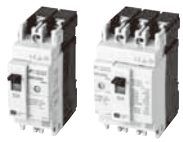						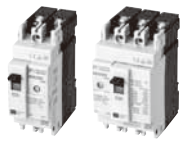			
Numbers of poles and elements				2P2E	3P3E	2P2E	3P3E	2P2E	3P3E	2P2E	3P3E	2P2E	3P3E
Rated insulation voltage Ui[V]			AC	440		440		440		440		440	
			DC	125		–		125		–		125	
Rated impulse withstand voltage Uimp[kV]				6		6		6		6		6	
Rated current Reference temperature 40°C In[A]				3,5,10,15,20,30,32		3,5,10,15,20,30,32,40,50				60,63			
Rated frequency [Hz]				50-60		50-60		50-60		50-60		50-60	
Rated breaking capacity Icu/Ics [kA]	IEC60947-2 EN60947-2 JISC8201-2-1	AC	440V	2.5/2.5		2.5/2.5		7.5/4		2.5/2.5		7.5/4	
			415V	5/5		5/5		10/5		5/5		10/5	
			400V	5/5		5/5		10/5		5/5		10/5	
			380V	5/5		5/5		10/5		5/5		10/5	
			240V	7.5/7.5		7.5/7.5		15/15		7.5/7.5		15/15	
			230V	7.5/7.5		7.5/7.5		15/15		7.5/7.5		15/15	
		DC	125V	10/10		–/–		10/10		–/–		10/10	
	GB14048.2	AC	400V	5/5		5/5		10/5		5/5		10/5	
			230V	7.5/7.5		7.5/7.5		15/15		7.5/7.5		15/15	
		DC	125V	10/10		–/–		10/10		–/–		10/10	
Isolation compliance				Compliant		Compliant		Compliant		Compliant		Compliant	
Reverse connection				Possible		Possible		Possible		Possible		Possible	
Utilization category				A		A		A		A		A	
Use environment condition				Pollution degree 3		Pollution degree 3		Pollution degree 3		Pollution degree 3		Pollution degree 3	
Outline dimensions [mm] 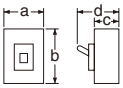			a	36	54	36	54	36	54	36	54	36	54
			b	100		100		100		100		100	
			c	68		68		68		68		68	
			d	90		90		90		90		90	
Front mounting type product mass [kg]			Page	0.4	0.5	0.4	0.5	0.4	0.5	0.4	0.5	0.4	0.5
Mounting and connection	Front mounting type (screw mounting, IEC 35 mm rail mounting)		B1-186 to 188	○		○		○		○		○	
Accessories	Auxiliary switch	W	B1-199	○		○		○		○		○	
	Alarm switch	K	B1-199	○		○		○		○		○	
	Shunt trip device	F □	B1-199	○		○		○		○		○	
	Undervoltage trip device	R □	B1-199	–	○	–	○	–	○	–	○	–	○
	Lead wire terminal block	A	B1-204	○		○		○		○		○	
Separately sold parts	Auxiliary switch	W	B1-192	○		○		○		○		○	
	Alarm switch	K	B1-192	○		○		○		○		○	
	Shunt trip device	F □	B1-192	○		○		○		○		○	
	External operating handle: Panel mounting	V	B1-201	○		○		○		○		○	
	External operating handle: Main unit mounting	N	B1-201	○		○		○		○		○	
	Terminal cover: Short type	TS	B1-201	○		○		○		○		○	
	Terminal cover: Long type	TL	B1-201	○		○		○		○		○	
	Insulation barrier: Interphase barrier	B	B1-201	○		○		○		○		○	
	Handle locking cover	L1	B1-201	○		○		○		○		○	
	Handle key lock	Q2	B1-201	○		○		○		○		○	
Conformance to standards	IEC60947-2 (TÜV certificate)												
	EN60947-2 (CE marking)												
	GB14048.2 (CCC certificate)												
	JISC8201-2-1			Self-declaration of conformity									
	Electrical Appliances and Materials Safety Act			Specified Electrical Appliances and Materials									
Tripping device				Thermal-electromagnetic method									
Trip button				Provided									
Characteristics curves and dimensions on pages				B1-203, 204									

Molded Case Circuit Breakers / Earth Leakage Circuit Breakers G-TWIN Λ (Lambda) Series Specifications

■ Molded Case Circuit Breakers for Line Protection Use (Global Products)

Ampere frame				50	
Type				**BW50RBGU**	
Appearance					
Numbers of poles and elements				2P2E	3P3E
Rated insulation voltage Ui[V]			AC	440	
			DC	125	
Rated impulse withstand voltage Uimp[kV]				6	
Rated current Reference temperature 40°C In[A]				3,5,10,15,20,30,40,50	
Rated frequency [Hz]				50-60	
Rated breaking capacity Icu/Ics [kA]	UL489, CAN/CSA22.2 No.5(cUL)	AC	240V	18	
	IEC60947-2 EN60947-2 JISC8201-2-1	AC	440V	7.5/4	
			415V	10/5	
			400V	10/5	
			380V	10/5	
			240V	15/15	
			230V	15/15	
		DC	125V	10/10	
	GB14048.2	AC	400V	10/5	
			230V	15/15	
		DC	125V	10/10	
Isolation compliance				Compliant	
Reverse connection				Possible	
Utilization category				A	
Use environment condition				Pollution degree 3	
Outline dimensions [mm]	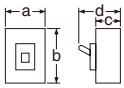		a	36	54
			b	120 (including the terminal cover)	
			c	68	
			d	90	
Front mounting type product mass [kg]			Page	0.5	0.6
Mounting and connection	Front mounting type (screw mounting, IEC 35 mm rail mounting)		B1-186 to 188	○	
Accessories	Auxiliary switch	W	B1-199	○	
	Alarm switch	K	B1-199	○	
	Shunt trip device	F □	B1-199	○	
	Undervoltage trip device	R □	B1-199	–	○
	Lead wire terminal block	A	B1-207	○	
Separately sold parts	Auxiliary switch	W	B1-192	○	
	Alarm switch	K	B1-192	○	
	Shunt trip device	F □	B1-192	○	
	External operating handle: Panel mounting	V	B1-201	○	
	External operating handle: Main unit mounting	N	B1-201	○	
	Terminal cover: Short type	TS	B1-201	○ (Included)	
	Terminal cover: Long type	TL	B1-201	○	
	Insulation barrier: Interphase barrier	B	B1-201	○	
	Handle locking cover	L1	B1-201	○	
	Handle key lock	Q2	B1-201	○	
Conformance to standards	UL489, CAN/CSA22.2 No.5(cUL)			c UL us LISTED (File No.E90584)	
	IEC60947-2 (TÜV certificate)				
	EN60947-2 (CE marking)			CE	
	GB14048.2 (CCC certificate)				
	JISC8201-2-1			Self-declaration of conformity	
	Electrical Appliances and Materials Safety Act			Specified Electrical Appliances and Materials PSE	
Tripping device				Thermal-electromagnetic method	
Trip button				Provided	
Characteristics curves and dimensions on pages				B1-206, 207	

Information subject to change without notice

Molded Case Circuit Breakers / Earth Leakage Circuit Breakers
G-TWIN Λ (Lambda) Series Specifications

■ Earth Leakage Circuit Breakers for Line Protection Use (Standard Products)

Ampere frame				32		50			
Type				**EW32SBG**		**EW50EBG**		**EW50SBG**	
Appearance									
Numbers of poles and elements				2P2E	3P3E	2P2E	3P3E	2P2E	3P3E
Applied circuit				1ø2W	1ø2W,1ø3W,3ø2W	1ø2W	1ø2W,1ø3W,3ø2W	1ø2W	1ø2W,1ø3W,3ø2W
Rated operational voltage Ue[V]				100-240V AC	100-440V AC	100-240V AC	100-440V AC	100-240V AC	100-440V AC
Rated impulse withstand voltage Uimp[kV]				4	6	4	6	4	6
Rated current Reference temperature 40°C In[A]				5,10,15,20,30,32		5,10,15,20,30,32,40,50			
Rated frequency [Hz]				50-60		50-60		50-60	
Rated sensitive current IΔn[mA]				30	30,100,200,500	30	30,100,200,500	30	30,100,200,500
Maximum operating time [sec]			IΔn	0.1		0.1		0.1	
			5IΔn	0.04		0.04		0.04	
Rated breaking capacity Icu/Ics [kA]	IEC60947-2 EN60947-2 JISC8201-2-2	AC	440V	–/–	2.5/2.5	–/–	2.5/2.5	–/–	7.5/4
			415V	–/–	5/5	–/–	5/5	–/–	10/5
			400V	–/–	5/5	–/–	5/5	–/–	10/5
			380V	–/–	5/5	–/–	5/5	–/–	10/5
			240V	7.5/7.5	7.5/7.5	7.5/7.5	7.5/7.5	15/15	15/15
			230V	7.5/7.5	7.5/7.5	7.5/7.5	7.5/7.5	15/15	15/15
			100V	7.5/7.5	7.5/7.5	7.5/7.5	7.5/7.5	15/15	15/15
	GB14048.2	AC	400V	–/–	5/5	–/–	5/5	–/–	10/5
			230V	7.5/7.5	7.5/7.5	7.5/7.5	7.5/7.5	15/15	15/15
Isolation compliance				Compliant		Compliant		Compliant	
Reverse connection				Not possible		Not possible		Not possible	
Utilization category				A		A		A	
Use environment condition				Pollution degree 3		Pollution degree 3		Pollution degree 3	
Outline dimensions [mm] 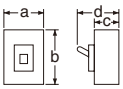			a	36	54	36	54	36	54
			b	100		100		100	
			c	68		68		68	
			d	90		90		90	
Front mounting type product mass [kg]			Page	0.4	0.6	0.4	0.6	0.4	0.6
Mounting and connection	Front mounting type (screw mounting, IEC 35 mm rail mounting)		B1-186 to 188	○		○		○	
Accessories	Auxiliary switch	W	B1-199	○		○		○	
	Alarm switch	K	B1-199	○		○		○	
	Shunt trip device	F □	B1-199	–	○	–	○	–	○
	Undervoltage trip device	R □	B1-199	–	○	–	○	–	○
	Trip lead	T	B1-191	○		○		○	
	Lead wire terminal block	A	B1-210	○		○		○	
Separately sold parts	Auxiliary switch	W	B1-192	○		○		○	
	Alarm switch	K	B1-192	○		○		○	
	Shunt trip device	F □	B1-192	–	○	–	○	–	○
	External operating handle: Panel mounting	V	B1-201	○		○		○	
	External operating handle: Main unit mounting	N	B1-201	○		○		○	
	Terminal cover: Short type	TS	B1-201	○		○		○	
	Terminal cover: Long type	TL	B1-201	○		○		○	
	Insulation barrier: Interphase barrier	B	B1-201	○		○		○	
	Handle locking cover	L1	B1-201	○		○		○	
	Handle key lock	Q2	B1-201	○		○		○	
Conformance to standards	IEC60947-2 (TÜV certificate)								
	EN60947-2 (CE marking)								
	GB14048.2 (CCC certificate)								
	JISC8201-2-1			Self-declaration of conformity					
	Electrical Appliances and Materials Safety Act			Specified Electrical Appliances and Materials					
Tripping device				Thermal-electromagnetic method					
Trip button				Provided					
Earth leakage indication				Mechanical button					
Characteristics curves and dimensions on pages				B1-209, 210					

Rated voltage (V)	Operational voltage range (V)
100-240V AC	80 to 264V AC
100-440V AC	80 to 484V AC

Molded Case Circuit Breakers / Earth Leakage Circuit Breakers
G-TWIN Λ (Lambda) Series Specifications

Ampere frame				63			
Type				**EW63EBG**		**EW63SBG**	
Appearance				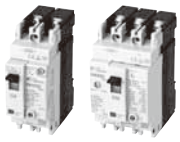			
Numbers of poles and elements				2P2E	3P3E	2P2E	3P3E
Applied circuit				1ø2W	1ø2W,1ø3W,3ø2W	1ø2W	1ø2W,1ø3W,3ø2W
Rated operational voltage Ue[V]				100-240V AC	100-440V AC	100-240V AC	100-440V AC
Rated impulse withstand voltage Uimp[kV]				4	6	4	6
Rated current Reference temperature 40°C In[A]				60,63			
Rated frequency [Hz]				50-60			
Rated sensitive current IΔn[mA]				30	30,100,200,500	30	30,100,200,500
Maximum operating time [sec]			IΔn	0.1		0.1	
			5IΔn	0.04		0.04	
Rated breaking capacity Icu/Ics [kA]	IEC60947-2 EN60947-2 JISC8201-2-2	AC	440V	–/–	2.5/2.5	–/–	7.5/4
			415V	–/–	5/5	–/–	10/5
			400V	–/–	5/5	–/–	10/5
			380V	–/–	5/5	–/–	10/5
			240V	7.5/7.5	7.5/7.5	15/15	15/15
			230V	7.5/7.5	7.5/7.5	15/15	15/15
			100V	7.5/7.5	7.5/7.5	15/15	15/15
	GB14048.2	AC	400V	–/–	5/5	–/–	10/5
			230V	7.5/7.5	7.5/7.5	15/15	15/15
Isolation compliance				Compliant		Compliant	
Reverse connection				Not possible		Not possible	
Utilization category				A		A	
Use environment condition				Pollution degree 3		Pollution degree 3	
Outline dimensions [mm]	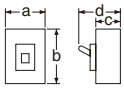		a	36	54	36	54
			b	100		100	
			c	68		68	
			d	90		90	
Front mounting type product mass [kg]			Page	0.4	0.6	0.4	0.6
Mounting and connection	Front mounting type (screw mounting, IEC 35 mm rail mounting)		B1-186 to 188	○		○	
Accessories	Auxiliary switch	W	B1-199	○		○	
	Alarm switch	K	B1-199	○		○	
	Shunt trip device	F □	B1-199	–	○	–	○
	Undervoltage trip device	R □	B1-199	–	○	–	○
	Trip lead	T	B1-191	○		○	
	Lead wire terminal block	A	B1-210	○		○	
Separately sold parts	Auxiliary switch	W	B1-192	○		○	
	Alarm switch	K	B1-192	○		○	
	Shunt trip device	F □	B1-192	–	○	–	○
	External operating handle: Panel mounting	V	B1-201	○		○	
	External operating handle: Main unit mounting	N	B1-201	○		○	
	Terminal cover: Short type	TS	B1-201	○		○	
	Terminal cover: Long type	TL	B1-201	○		○	
	Insulation barrier: Interphase barrier	B	B1-201	○		○	
	Handle locking cover	L1	B1-201	○		○	
	Handle key lock	Q2	B1-201	○		○	
Conformance to standards	IEC60947-2 (TÜV certificate)						
	EN60947-2 (CE marking)						
	GB14048.2 (CCC certificate)						
	JISC8201-2-1			Self-declaration of conformity			
	Electrical Appliances and Materials Safety Act			Specified Electrical Appliances and Materials			
Tripping device				Thermal-electromagnetic method			
Trip button				Provided			
Earth leakage indication				Mechanical button			
Characteristics curves and dimensions on pages				B1-209, 210			

Rated voltage (V)	Operational voltage range (V)
100-240V AC	80 to 264V AC
100-440V AC	80 to 484V AC

Fuji Electric FA Components & Systems Co., Ltd.
Information subject to change without notice

Molded Case Circuit Breakers / Earth Leakage Circuit Breakers G-TWIN Λ (Lambda) Series Specifications

■ Earth Leakage Circuit Breakers for Line Protection Use (Global Products)

Ampere frame				50	
Type				**EW50RBGU**	
Appearance					
Numbers of poles and elements				2P2E	3P3E
Applied circuit				1ø2W	1ø2W,3ø3W
Rated operational voltage Ue[V]			IEC	100-240V AC	100-440V AC
			UL	240V AC	240V AC
Rated impulse withstand voltage Uimp[kV]				4	6
Rated current Reference temperature 40°C In[A]				5,10,15,20,30,40,50	
Rated frequency [Hz]				50-60	
Rated sensitive current IΔn [mA]				30	30,50,100,200,500
Maximum operating time [sec]			IΔn	0.1	
			5IΔn	0.04	
Rated breaking capacity Icu/Ics [kA]	UL489, CAN/CSA22.2 No.5(cUL)	AC	240V	18	18
	IEC60947-2 EN60947-2 JISC8201-2-2	AC	440V	–/–	7.5/4
			415V	–/–	10/5
			400V	–/–	10/5
			380V	–/–	10/5
			240V	15/15	15/15
			230V	15/15	15/15
			100V	15/15	15/15
	GB14048.2	AC	400V	–/–	10/5
			230V	15/15	15/15
Isolation compliance				Compliant	
Reverse connection				Not possible	
Utilization category				A	
Use environment condition				Pollution degree 3	
Outline dimensions [mm]	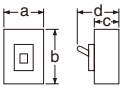		a	36	54
			b	120 (including the terminal cover)	
			c	68	
			d	90	
Front mounting type product mass [kg]			Page	0.5	0.6
Mounting and connection	Front mounting type (screw mounting, IEC 35 mm rail mounting)		B1-186 to 188	○	
Accessories	Auxiliary switch	W	B1-199	○	
	Alarm switch	K	B1-199	○	
	Shunt trip device	F □	B1-199	–	○
	Undervoltage trip device	R □	B1-199	–	○
	Lead wire terminal block	A	B1-213	○	
Separately sold parts	Auxiliary switch	W	B1-192	○	
	Alarm switch	K	B1-192	○	
	Shunt trip device	F □	B1-192	–	○
	External operating handle: Panel mounting	V	B1-201	○	
	External operating handle: Main unit mounting	N	B1-201	○	
	Terminal cover: Short type	TS	B1-201	○ (Included)	
	Terminal cover: Long type	TL	B1-201	○	
	Handle locking cover	L1	B1-201	○	
	Handle key lock	Q2	B1-201	○	
Conformance to standards	UL489, CAN/CSA22.2 No.5(cUL)			c UL us LISTED (File No.E90584)	
	IEC60947-2 (TÜV certificate)				
	EN60947-2 (CE marking)			CE	
	GB14048.2 (CCC certificate)				
	JISC8201-2-1			Self-declaration of conformity	
	Electrical Appliances and Materials Safety Act			Specified Electrical Appliances and Materials PS E	
Tripping device				Thermal-electromagnetic method	
Trip button				Provided	
Earth leakage indication				Mechanical button	
Characteristics curves and dimensions on pages				B1-212, 213	

Standards	Rated voltage (V)	Operational voltage range (V)
UL	240V AC	80 to 264V AC
IEC	100-240V AC	80 to 264V AC
	100-440V AC	80 to 484V AC

Molded Case Circuit Breakers / Earth Leakage Circuit Breakers G-TWIN Λ (Lambda) Series Mounting and connection

■ Front Mounting Type

Appearance		Screw Shape	Screw size	Tightening torque [N•m]	MCCB main unit applicable type (basic designation)	ELCB main unit applicable type (basic designation)
For crimp/stick terminals (front connection)		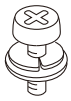 Cross-recessed pan-head screw with washer	M5 x 14	2.0 to 3.0	**BW32** **BW50**	**EW32** **EW50**
			M6 x 14	4.0 to 5.0	**BW63**	**EW63**

Mount the crimp terminals to ensure that the wires for the respective poles are in parallel as shown in the figure below.

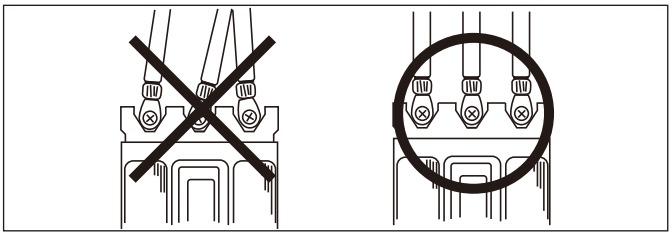

(1) List of applicable crimp terminals

Frame [A]	MCCB main unit applicable type (basic designation)	ELCB main unit applicable type (basic designation)					
	Cross section area of electric wire used [mm²]		2	5.5	8	14	22
	Allowable current [A] (600V IV electric wire 30°C Insulator wiring)		27	49	61	88	115
	Range of electric wire used [mm²]		1.04 to 2.63	2.63 to 6.64	6.64 to 10.52	10.52 to 16.78	16.78 to 26.66
32	**BW32**	**EW32**	R2-5	R5.5-5	R8-5	R14-5	
50	**BW50**	**EW50**					
63	**BW63**	**EW63**	R2-6	R5.5-6	R8-6	R14-6	JST 22-S6

(Explanation) R: JIS C2805, JST: provided by JST Mfg. Co., Ltd.

● Crimp terminal size

Model number	Shape	Diameter of screw used	Outline dimensions [mm] ød₂	B	L	F	E	Plate thickness	Applicable electric wire [mm²]
R2-5	A	M5	5.3	9.5	16.8	7.3	4.8	0.8	1.04 to 2.63
R2-6		M6	6.4	12.0	21.8	11.0			
R5.5-5		M5	5.3	9.5	19.8	8.3	6.8	1.0	2.63 to 6.64
R5.5-6		M6	6.4	12.0	25.8	13.0			
R8-5		M5	5.3		29.8	9.3	8.5	1.2	6.64 to 10.52
R8-6		M6	6.4						
R14-5		M5	5.3			13.3	10.5	1.5	10.52 to 16.78
R14-6		M6	6.4						
22-S5		M5	5.3		30.0	12.0	12.0	1.8	16.78 to 26.66
L330T459-23		M5	5.3						
22-S6		M6	6.4						

Note: Excerpt from JST's catalog

Shape A

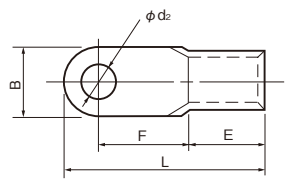

Fuji Electric FA Components & Systems Co., Ltd.
Information subject to change without notice

Molded Case Circuit Breakers / Earth Leakage Circuit Breakers G-TWIN Λ (Lambda) Series Mounting and connection

● Wire connecting method (global products)

(1) Notes on wire (conductor) connection

- Connect wires to UL breakers according to the National Electrical Code (NEC) or Canadian Electrical Code (CEC) Part 1.
- For connection, use 75°C copper wires. Use of UL- or CSA-approved wires is recommended.
- A large current flow including a short-circuit current flow may generate a very large electromagnetic force between wires. Ensure that wires are securely supported.
- Regularly retighten the tightening screws of the terminals.
- Do not cover the arc gas outlet.

● Connectable wire and tightening torque

Crimp terminal connection

MCCB main unit type	ELCB main unit type	Rated current [A]	Applicable crimp terminal (Provided by JST Mfg.)	Applicable crimp terminal: Provided by Nichifu	Applicable crimp terminal: Provided by Daido Solderless Terminal Mfg.	Connectable wire size 75°C wire	Tightening torque [N•m]	Screw head type and size [mm]
BW50RBGU	**EW50RBGU**	3	2-M5, R2-5	R2-5, R2-5M	R2-5, R2-S5	14AWG	2.0 to 3.0	Cross-recessed pan-head screw with washer
		5						
		10						
		15						
		20	3.5-5, 3.5-R5, 5-S5, 5.5-5NS, R5.5-5	R3.5-5S, R3.5-5L, R5.5-5, R5.5-5N, R5.5-5S	R3.5-5, R5.5-5, R5.5-L5, R5.5-S5	12AWG		
		30	5-S5, 5.5-5NS, R5.5-5	R5.5-5, R5.5-5N, R5.5-5	R5.5-5, R5.5-L5, R5.5-S5	10AWG		
		40	8-5NS,8-NK5, 8-5L5NS	R8-5, R8-5S	R8-5, R8-S5	8AWG		
		50						

Note 1: AWG/MCM is a system to indicate UL wire sizes.
Note 2: Use 75°C wires for connection. (UL- or CSA-approved wires)
Note 3: For the crimping tool, be sure to use UL- or CSA-approved products from manufacturers.

■ Arc Space

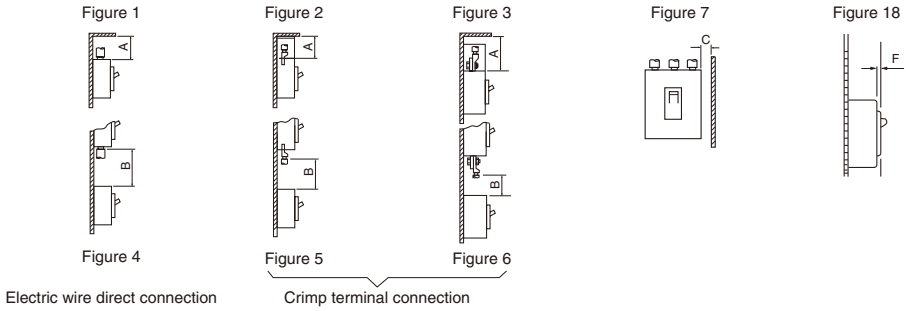

Ensure the values in the table below for the insulation space according to the conditions given in the respective drawings. For wiring, take into consideration various situations that may arise in actual use conditions and provide bare conductors with taping or insulation barriers for the ranges of dimensions shown in the table below.
Insulation outside the arc space may need reinforcement depending on the use conditions.

[Unit: mm]

Basic designation		Ceiling distance	Vertical distance	Side plate distance	Front plate distance
MCCB	ELCB	A	B	C	F
BW32	**EW32**	10	20	10	0
BW50	**EW50**				
BW63	**EW63**				
		Figure 1, 2, 3	Figure 4, 5, 6	Figure 7	Figure 8

Molded Case Circuit Breakers / Earth Leakage Circuit Breakers G-TWIN Λ (Lambda) Series Mounting and connection

■ IEC 35 mm Rail Mounting

Mounting on IEC 35 mm rails is possible as standard.

Main unit applicable type (basic designation)	
MCCB	ELCB
BW32 **BW50** **BW63**	**EW32** **EW50** **EW63**

Note 1: Mounting pitch for rail fixing screws of within 250 mm is recommended.
Note 2: Applicable rails: TH35-7.5, TH35-7.5AL and TH35-15AL. (Types of Fuji Electric FA Components & Systems products)
* Main unit mounting screws are not included. When necessary, use commercially-available screws (recommended size: M4 x 60).

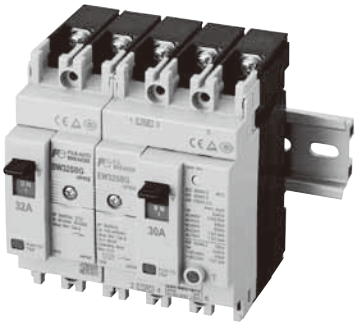

Note: For vertical mounting, use holding brackets (type LT9E-T1 provided by Fuji Electric Technica Co., Ltd.).

■ Terminal Number

● ELCB terminal number

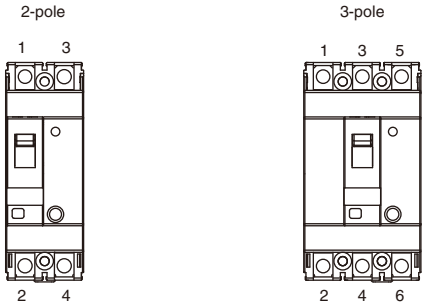

■ Internal Wiring Diagram

● ELCB internal wiring diagram

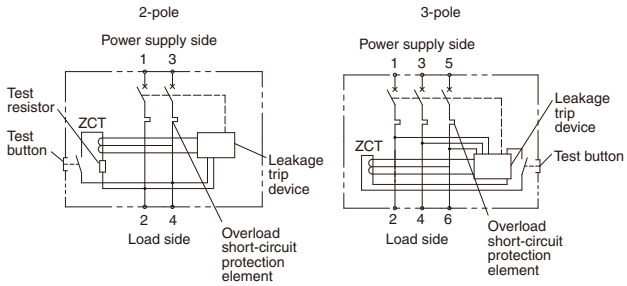

■ Internal Resistance and Power Consumption

● MCCB

AF	Type	Rated current [A]	Internal resistance (mΩ) (for one phase)	Power consumption (W) (for three phases)
32AF 50AF	**BW32SBG** **BW50EBG** **BW50SBG** **BW50RBGU**	3	116.0	3.1
		5	50.5	3.8
		10	13.8	4.1
		15	6.5	4.4
		20	4.1	5.2
		30	2.8	7.6
		32	2.8	8.6
50AF	**BW50EBG** **BW50SBG** **BW50RBGU**	40	1.7	8.2
		50	1.5	11.3
63AF	**BW63EBG** **BW63SBG**	60	1.1	11.9
		63	1.1	13.1

● ELCB

AF	Type	Rated current [A]	Internal resistance (mΩ) (for one phase)	Power consumption (W) (for three phases)
32AF 50AF	**EW32SBG** **EW50EBG** **EW50SBG** **EW50RBGU**	5	50.5	3.8
		10	13.8	4.1
		15	6.5	4.4
		20	4.1	5.2
		30	2.8	7.6
		32	2.8	8.6
50AF	**EW50EBG** **EW50SBG** **EW50RBGU**	40	1.9	9.1
		50	1.7	12.8
63AF	**EW63EBG** **EW63SBG**	60	1.3	14.0
		63	1.3	15.5

■ Internal Accessories

(1)-1 Variation of internal accessories (MCCB)

Auxiliary switch

Switch that electrically indicates the ON/OFF state of MCCB/ELCB.

Type symbol : W | See page: B1-199

Alarm switch

Switch that electrically indicates the trip state of MCCB/ELCB.

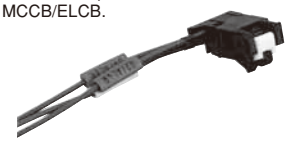

Type symbol : K | See page : B1-199

Shunt trip device

Device that electrically trips MCCB/ELCB from a remote place.

Type symbol : F | See page : B1-199

Undervoltage trip device

Device that automatically trips MCCB/ELCB when the circuit voltage has decreased below the specified value.
(Externally mounted)

Note 1. Not separately sold.
(Factory mounting only)

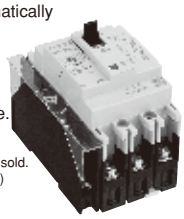

Type symbol : R | See page : B1-199

2-pole product

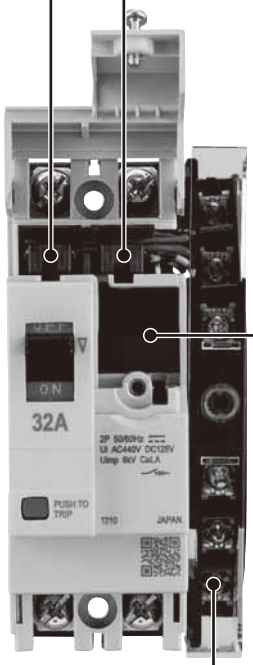

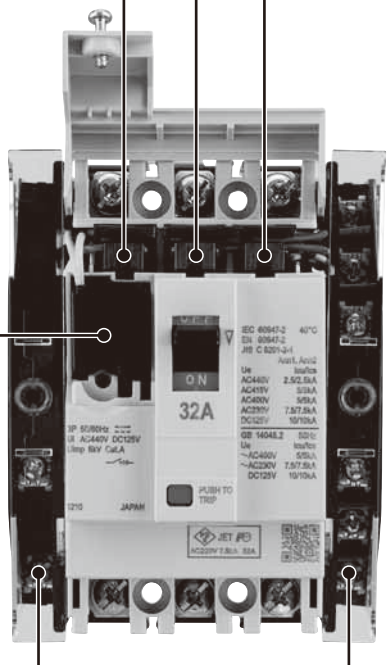

3-pole product

Lead wire terminal block

Provides wiring terminals for connection with internal accessories.

Type symbol : A | See page : B1-204, 207

(1)-2 Variation of internal accessories (ELCB)

Auxiliary switch

Switch that electrically indicates the ON/OFF state of MCCB/ELCB.

Type symbol : W	See page : B1-199

Alarm switch

Switch that electrically indicates the trip state of MCCB/ELCB.

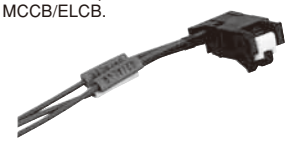

Type symbol : K	See page : B1-199

Shunt trip device

Device that electrically trips MCCB/ELCB from a remote place.

Type symbol : F	See page : B1-199

Undervoltage trip device

Device that automatically trips MCCB/ELCB when the circuit voltage has decreased below the specified value.
(Externally mounted)

Note 1. Not separately sold.
(Factory mounting only)

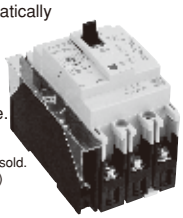

Type symbol : R	See page : B1-199

2-pole product

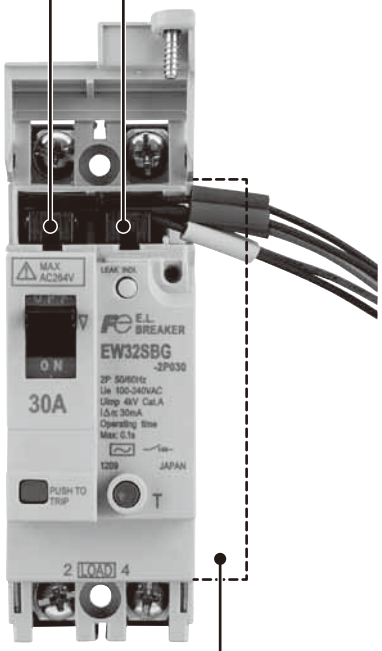

3-pole product

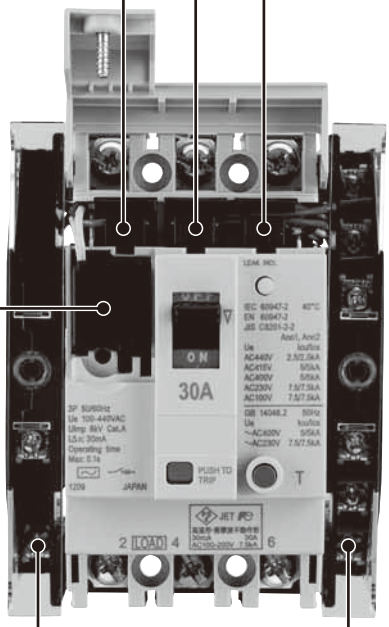

Lead wire terminal block

Provides wiring terminals for connection with internal accessories.

Type symbol : A	See page : B1-210, 213

Trip lead

Device that remotely trips ELCB with a contact signal.

Type symbol : T	See page : B1-191

(2) Types and terminal numbers of internal accessories

The following describes the types and terminal numbers of internal accessories.

Type		Terminal number: Left side mounting	Terminal number: Right side mounting	Remarks
Auxiliary switch Standard: W, V Low level circuit: 1, 2	For one switch (W) (1)	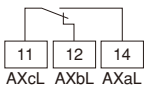	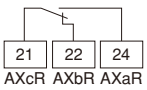	For the rated operational voltage and current, see page B-199. For details of mounting positions, see the List of internal accessory combinations on pages B1-193 to 198.
	For two switches (V) (2)	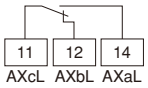	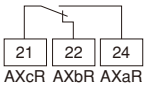	
Alarm switch Standard: K Low level circuit: 8	For one switch (K) (8)	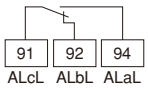	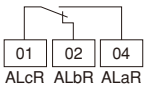	
Shunt trip device: F	With burn-out preventive contact (standard)	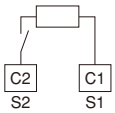		For the operating voltage, see page B1-199.
Undervoltage trip device		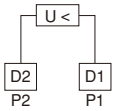		For the operating voltage, see page B1-199.
Trip lead: T (For ELCB only) Note: Cannot be specified for global products.		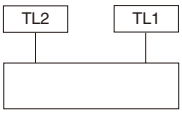		Do not apply voltage on the terminal block because the main circuit voltage is output. Select a switch to be connected that is capable of switching the main circuit voltage of the ELCB without any problem and withstands a current of up to 1 A. Do not share the switch of the trip lead with other ELCB. It may cause a fire due to a short circuit. When extending the trip lead, ensure that the length is within 3 m. Failure to observe this instruction may lead to unwanted operation.

(3) Combinations of internal accessories

● List of internal accessory combinations

Type			MCCB				ELCB							
Main unit applicable type			**BW32SBG** **BW50EBG** **BW50SBG** **BW63EBG** **BW63SBG** **BW50RBGU**				**EW32SBG** **EW50EBG** **EW50SBG** **EW63EBG** **EW63SBG**				**EW50RBGU**			
Number of poles			2P		3P		2P		3P		2P		3P	
Terminal connection			Lead wire	Terminal block	Lead wire	Terminal block	Lead wire	Terminal block	Lead wire	Terminal block	Lead wire	Terminal block	Lead wire	Terminal block
Accessory type	Auxiliary switch x1	W (1)	○	○	○	○	○	○	○	○	○	○	○	○
	Auxiliary switches x2	V (2)	—	—	○	○	—	—	○	○	—	—	○	○
	Alarm switch x1	K (8)	○	○	○	○	○	○	○	○	○	○	○	○
	Shunt trip device	F	○ *1	○ *1	○	○	—	—	○	○	—	—	○	○
	Undervoltage trip device	R	—	—	—	○ *1	—	—	—	○ *1	—	—	—	○ *1
	Trip lead	T	—	—	—	—	—	○ *1	—	○ *1	—	—	—	—
	Combination	W+K	○	○	○	○	○	○	○	○	○	○	○	○
		W+F	—	—	○	○	—	—	○	○	—	—	○	○
		W+R	—	—	○ *2	○ *1	—	—	○ *2	○ *1	—	—	○ *2	○ *1
		W+T	—	—	—	—	—	—	○ *2	○ *1	—	—	—	—
		V+K	—	—	○	○	—	—	○	○	—	—	○	○
		K+F	—	—	○	○	—	—	○	○	—	—	○	○
		K+R	—	—	○ *2	○ *1	—	—	○ *2	○ *1	—	—	○ *2	○ *1
		K+T	—	—	—	—	—	—	○ *2	○ *1	—	—	—	—
		W+K+F	—	—	○	○	—	—	○	○	—	—	○	○
		W+K+R	—	—	○ *2	○ *1	—	—	○ *2	○ *1	—	—	○ *2	○ *1
		W+K+T	—	—	—	—	—	—	○ *2	○ *1	—	—	—	—

Note *1: Factory mounting only (to be specified in the order).
Note *2: Factory mounting only; W/K for lead wire connection and R/T for terminal block connection (to be specified in the order).

Molded Case Circuit Breakers / Earth Leakage Circuit Breakers G-TWIN Λ (Lambda) Series Accessories

● **One-touch mounting internal accessories (separately sold)**

Type	Terminal connection	Lead wire pull-out direction	Type	Voltage rating	Mountability			
					MCCB		ELCB	
					2P	3P	2P	3P
Auxiliary switch (standard type)	Lead wire type	Left side	**BW9W1SB1**		–	○	–	○
		Right side	**BW9W1SB1-R**		○	○	○	○
Auxiliary switch (low level circuit)		Left side	**BW9W1DB1**		–	○	–	○
		Right side	**BW9W1DB1-R**		○	○	○	○
Alarm switch (standard type)		Left side	**BW9K1SB1**		–	○	–	○
		Right side	**BW9K1SB1-R**		○	○	○	○
Alarm switch (low level circuit)		Left side	**BW9K1DB1**		–	○	–	○
		Right side	**BW9K1DB1-R**		○	○	○	○
Auxiliary/alarm switch (standard type)		Left side	**BW9WKSB1**		–	○	–	○
		Right side	**BW9WKSB1-R**		○	○	○	○
Auxiliary/alarm switch (low level circuit)		Left side	**BW9WKDB1**		–	○	–	○
		Right side	**BW9WKDB1-R**		○	○	○	○
Shunt trip device		Left side	**BW9FRB1**	AC/DC24V	–	○	–	○
			BW9F6B1	AC100-130V/DC100-110V				
			BW9FKB1	AC200-240V/DC200-220V				
			BW9FPB1	AC380-440V				
Auxiliary switch (standard type)	Terminal block type	Left side	**BW9W1SB1-A**		○	○	○	○
		Right side	**BW9W1SB1-RA**		–	○	–	○
Auxiliary switch (low level circuit)		Left side	**BW9W1DB1-A**		○	○	○	○
		Right side	**BW9W1DB1-RA**		–	○	–	○
Alarm switch (standard type)		Left side	**BW9K1SB1-A**		○	○	○	○
		Right side	**BW9K1SB1-RA**		–	○	–	○
Alarm switch (low level circuit)		Left side	**BW9K1DB1-A**		○	○	○	○
		Right side	**BW9K1DB1-RA**		–	○	–	○
Auxiliary/alarm switch (standard type)		Left side	**BW9WKSB1-A**		○	○	○	○
		Right side	**BW9WKSB1-RA**		–	○	–	○
Auxiliary/alarm switch (low level circuit)		Left side	**BW9WKDB1-A**		○	○	○	○
		Right side	**BW9WKDB1-RA**		–	○	–	○
Shunt trip device		Left side	**BW9FRB1-A**	AC/DC24V	–	○	–	○
			BW9F6B1-A	AC100-130V/DC100-110V				
			BW9FKB1-A	AC200-240V/DC200-220V				
			BW9FPB1-A	AC380-440V				

● **Details of combinations of internal accessories**

(a) Lead wire type (MCCB)

Lead wire type	MCCB (2P)				MCCB (3P)			
	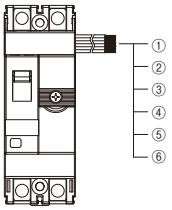				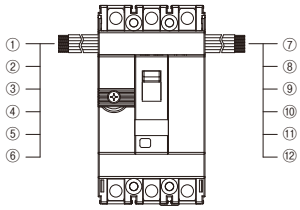			
Type	**BW32SBG, BW50 □ BG, BW63 □ BG BW50RBGU**				**BW32SBG, BW50 □ BG, BW63 □ BG BW50RBGU**			
Accessory type	Left side		Right side		Left side		Right side	
	Position	Ring mark	Position	Ring mark	Position	Ring mark	Position	Ring mark
Auxiliary switch	Cannot be pulled out to the left side.		①	21/AXc : Yellow	①	11/AXc : White	Can be mounted on the right side as well by purchasing a separately sold product (for right-side mounting).	
			②	24/AXa : Red	②	14/AXa : Brown		
			③	22/AXb : Blue	③	12/AXb : Green		
			—	—	—	—		
			—	—	—	—		
W(1)*			—	—	—	—		
Auxiliary switch x 2	Cannot be mounted.				①	11/AXc : White	⑦	21/AXc : Yellow
					②	14/AXa : Brown	⑧	24/AXa : Red
					③	12/AXb : Green	⑨	22/AXb : Blue
					—	—	—	—
					—	—	—	—
V(2)*					—	—	—	—
Alarm switch	Cannot be pulled out to the left side.		①	01/ALc : Yellow	①	91/ALc : White	Can be mounted on the right side as well by purchasing a separately sold product (for right-side mounting).	
			②	04/ALa : Red	②	94/ALa : Brown		
			③	02/ALb : Blue	③	92/ALb : Green		
			—	—	—	—		
			—	—	—	—		
K(8)*			—	—	—	—		
Auxiliary switch + alarm switch	Cannot be pulled out to the left side.		①	01/ALc : Yellow	①	91/ALc : White	Can be mounted on the right side as well by purchasing a separately sold product (for right-side mounting).	
			②	04/ALa : Red	②	94/ALa : Brown		
			③	02/ALb : Blue	③	92/ALb : Green		
			④	21/AXc : Yellow	④	11/AXc : White		
			⑤	24/AXa : Red	⑤	14/AXa : Brown		
W(1)* K(8)*			⑥	22/AXb : Blue	⑥	12/AXb : Green		
Auxiliary switch x 2 + alarm switch	Cannot be mounted.				①	91/ALc : White	⑦	21/AXc : Yellow
					②	94/ALa : Brown	⑧	24/AXa : Red
					③	92/ALb : Green	⑨	22/AXb : Blue
					④	11/AXc : White	—	—
					⑤	14/AXa : Brown	—	—
V(2)* K(8)*					⑥	12/AXb : Green	—	—
Shunt trip device	Cannot be pulled out to the left side.		①	C1/S1 : White	①	C1/S1 : White	—	—
			②	C2/S2 : White	②	C2/S2 : White	—	—
			—	—	—	—	—	—
			—	—	—	—	—	—
			—	—	—	—	—	—
F □			—	—	—	—	—	—
Auxiliary switch + shunt trip device	Cannot be mounted.				①	C1/S1 : White	⑦	21/AXc : Yellow
					②	C2/S2 : White	⑧	24/AXa : Red
					—	—	⑨	22/AXb : Blue
					—	—	—	—
					—	—	—	—
W(1)* F □					—	—	—	—
Alarm switch + shunt trip device	Cannot be mounted.				①	C1/S1 : White	⑦	01/ALc : Yellow
					②	C2/S2 : White	⑧	04/ALa : Red
					—	—	⑨	02/ALb : Blue
					—	—	—	—
					—	—	—	—
K(8)* F □					—	—	—	—
Auxiliary switch + alarm switch + shunt trip device	Cannot be mounted.				①	C1/S1 : White	⑦	01/ALc : Yellow
					②	C2/S2 : White	⑧	04/ALa : Red
					—	—	⑨	02/ALb : Blue
					—	—	⑩	21/AXc : Yellow
					—	—	⑪	24/AXa : Red
W(1)* K(8)* F □					—	—	⑫	22/AXb : Blue

Note: * ( ) code of Low level circuit

B1

(b) Lead wire type (ELCB)

Lead wire type	ELCB (2P)				ELCB (3P)			
	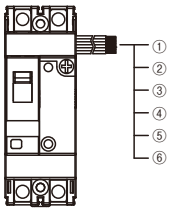				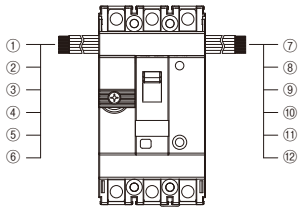			
Type	**EW32SBG, EW50 □ BG, EW63 □ BG EW50RBGU**				**EW32SBG, EW50 □ BG, EW63 □ BG EW50RBGU**			
Accessory type	Left side		Right side		Left side		Right side	
	Position	Ring mark	Position	Ring mark	Position	Ring mark	Position	Ring mark
Auxiliary switch	Cannot be pulled out to the left side.		①	21/AXc : Yellow	①	11/AXc : White	Can be mounted on the right side as well by purchasing a separately sold product (for right-side mounting).	
			②	24/AXa : Red	②	14/AXa : Brown		
			③	22/AXb : Blue	③	12/AXb : Green		
			—	—	—	—		
			—	—	—	—		
W(1)*			—	—	—	—		
Auxiliary switch x 2	Cannot be mounted.				①	11/AXc : White	⑦	21/AXc : Yellow
					②	14/AXa : Brown	⑧	24/AXa : Red
					③	12/AXb : Green	⑨	22/AXb : Blue
					—	—	—	—
					—	—	—	—
V(2)*					—	—	—	—
Alarm switch	Cannot be pulled out to the left side.		①	01/ALc : Yellow	①	91/ALc : White	Can be mounted on the right side as well by purchasing a separately sold product (for right-side mounting).	
			②	04/ALa : Red	②	94/ALa : Brown		
			③	02/ALb : Blue	③	92/ALb : Green		
			—	—	—	—		
			—	—	—	—		
K(8)*			—	—	—	—		
Auxiliary switch + alarm switch	Cannot be pulled out to the left side.		①	01/ALc : Yellow	①	91/ALc : White	Can be mounted on the right side as well by purchasing a separately sold product (for right-side mounting).	
			②	04/ALa : Red	②	94/ALa : Brown		
			③	02/ALb : Blue	③	92/ALb : Green		
			④	21/AXc : Yellow	④	11/AXc : White		
			⑤	24/AXa : Red	⑤	14/AXa : Brown		
W(1)* K(8)*			⑥	22/AXb : Blue	⑥	12/AXb : Green		
Auxiliary switch x 2 + alarm switch	Cannot be mounted.				①	91/ALc : White	⑦	21/AXc : Yellow
					②	94/ALa : Brown	⑧	24/AXa : Red
					③	92/ALb : Green	⑨	22/AXb : Blue
					④	11/AXc : White	—	—
					⑤	14/AXa : Brown	—	—
V(2)* K(8)*					⑥	12/AXb : Green	—	—
Shunt trip device	Cannot be mounted.				①	C1/S1 : White	—	—
					②	C2/S2 : White	—	—
					—	—	—	—
					—	—	—	—
					—	—	—	—
F □					—	—	—	—
Auxiliary switch + shunt trip device	Cannot be mounted.				①	C1/S1 : White	⑦	21/AXc : Yellow
					②	C2/S2 : White	⑧	24/AXa : Red
					—	—	⑨	22/AXb : Blue
					—	—	—	—
					—	—	—	—
W(1)* F □					—	—	—	—
Alarm switch + shunt trip device	Cannot be mounted.				①	C1/S1 : White	⑦	01/ALc : Yellow
					②	C2/S2 : White	⑧	04/ALa : Red
					—	—	⑨	02/ALb : Blue
					—	—	—	—
					—	—	—	—
K(8)* F □					—	—	—	—
Auxiliary switch + alarm switch + shunt trip device	Cannot be mounted.				①	C1/S1 : White	⑦	01/ALc : Yellow
					②	C2/S2 : White	⑧	04/ALa : Red
					—	—	⑨	02/ALb : Blue
					—	—	⑩	21/AXc : Yellow
					—	—	⑪	24/AXa : Red
W(1)* K(8)* F □					—	—	⑫	22/AXb : Blue

Note: * ( ) code of Low level circuit

(c) Terminal block type (MCCB)

Lead wire type	MCCB (2P)				MCCB (3P)			
	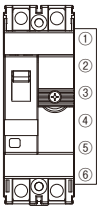				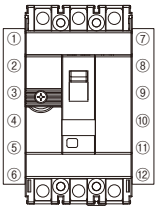			
Type	**BW32SBG, BW50 □ BG, BW63 □ BG BW50RBGU**				**BW32SBG, BW50 □ BG, BW63 □ BG BW50RBGU**			
Accessory type	Left side		Right side		Left side		Right side	
	Position	Ring mark	Position	Ring mark	Position	Ring mark	Position	Ring mark
Auxiliary switch	Cannot be mounted.		①	—	①	—	Can be mounted on the right side as well by purchasing a separately sold product (for right-side mounting).	
			②	—	②	—		
			③	—	③	—		
			④	21/AXcR	④	11/AXcL		
			⑤	22/AXbR	⑤	12/AXbL		
W(1)* A			⑥	24/AXaR	⑥	14/AXaL		
Auxiliary switch x 2	Cannot be mounted.				①	—	⑦	—
					②	—	⑧	—
					③	—	⑨	—
					④	11/AXcL	⑩	21/AXcR
					⑤	12/AXbL	⑪	22/AXbR
V(2)* A					⑥	14/AXaL	⑫	24/AXaR
Alarm switch	Cannot be mounted.		①	04/ALaR	①	94/ALaL	Can be mounted on the right side as well by purchasing a separately sold product (for right-side mounting).	
			②	02/ALbR	②	92/ALbL		
			③	01/ALcR	③	91/ALcL		
			④	—	④	—		
			⑤	—	⑤	—		
K(8)* A			⑥	—	⑥	—		
Auxiliary switch + alarm switch	Cannot be mounted.		①	04/ALaR	①	94/ALaL	Can be mounted on the right side as well by purchasing a separately sold product (for right-side mounting).	
			②	02/ALbR	②	92/ALbL		
			③	01/ALcR	③	91/ALcL		
			④	21/AXcR	④	11/AXcL		
			⑤	22/AXbR	⑤	12/AXbL		
W(1)* K(8)* A			⑥	24/AXaR	⑥	14/AXaL		
Auxiliary switch x 2 + alarm switch	Cannot be mounted.				①	94/ALaL	⑦	—
					②	92/ALbL	⑧	—
					③	91/ALcL	⑨	—
					④	11/AXcL	⑩	21/AXcR
					⑤	12/AXbL	⑪	22/AXbR
V(2)* K(8)* A					⑥	14/AXaL	⑫	24/AXaR
Shunt trip device	Cannot be mounted.		①	—	①	—	Cannot be mounted.	
			②	—	②	—		
			③	—	③	—		
			④	C2/S2	④	C2/S2		
			⑤	—	⑤	—		
F □ A			⑥	C1/S1	⑥	C1/S1		
Auxiliary switch + shunt trip device	Cannot be mounted.				①	—	⑦	—
					②	—	⑧	—
					③	—	⑨	—
					④	C2/S2	⑩	21/AXcR
					⑤	—	⑪	22/AXbR
W(1)* F □ A					⑥	C1/S1	⑫	24/AXaR
Alarm switch + shunt trip device	Cannot be mounted.				①	—	⑦	04/ALaR
					②	—	⑧	02/ALbR
					③	—	⑨	01/ALcR
					④	C2/S2	⑩	—
					⑤	—	⑪	—
K(8)* F □ A					⑥	C1/S1	⑫	—

Molded Case Circuit Breakers / Earth Leakage Circuit Breakers
G-TWIN Λ (Lambda) Series Accessories

Lead wire type	MCCB (2P)				MCCB (3P)			
					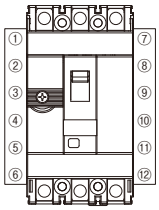			
Type	**BW32SBG, BW50 □ BG, BW63 □ BG BW50RBGU**				**BW32SBG, BW50 □ BG, BW63 □ BG BW50RBGU**			
Accessory type	Left side		Right side		Left side		Right side	
	Position	Ring mark	Position	Ring mark	Position	Ring mark	Position	Ring mark
Auxiliary switch + alarm switch + shunt trip device	Cannot be mounted.				①	—	⑦	04/ALaR
					②	—	⑧	02/ALbR
					③	—	⑨	01/ALcR
					④	C2/S2	⑩	21/AXcR
					⑤	—	⑪	22/AXbR
W(1)* K (8)* F □ A					⑥	C1/S1	⑫	24/AXaR
Undervoltage trip device	Cannot be mounted.				①	—	Cannot be mounted.	
					②	—		
					③	—		
					④	D2/P2		
					⑤	—		
R □					⑥	D1/P1		
Auxiliary switch + Undervoltage trip device	Cannot be mounted.				①	—	⑦	—
					②	—	⑧	—
					③	—	⑨	—
					④	D2/P2	⑩	21/AXcR
					⑤	—	⑪	22/AXbR
W(1)* R □ A					⑥	D1/P1	⑫	24/AXaR
Alarm switch + Undervoltage trip device	Cannot be mounted.				①	—	⑦	04/ALaR
					②	—	⑧	02/ALbR
					③	—	⑨	01/ALcR
					④	D2/P2	⑩	—
					⑤	—	⑪	—
K(8)* R □ A					⑥	D1/P1	⑫	—
Auxiliary switch + alarm switch + Undervoltage trip device	Cannot be mounted.				①	—	⑦	04/ALaR
					②	—	⑧	02/ALbR
					③	—	⑨	01/ALcR
					④	D2/P2	⑩	21/AXcR
					⑤	—	⑪	22/AXbR
W(1)* K(8)* R □ A					⑥	D1/P1	⑫	24/AXaR

Note: * ( ) code of Low level circuit
Remarks
1) The undervoltage trip device is factory-mounted when the product is shipped. Specify in the order for the main unit.

Fuji Electric FA Components & Systems Co., Ltd.
Information subject to change without notice

Molded Case Circuit Breakers / Earth Leakage Circuit Breakers
G-TWIN Λ (Lambda) Series Accessories

(d) Terminal block type (ELCB)

Lead wire type	ELCB (2P)				ELCB (3P)			
	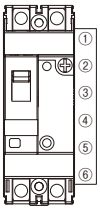				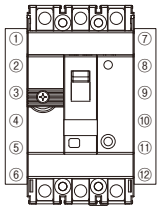			
Type	**EW32SBG, EW50 □ BG, EW63 □ BG EW50RBGU**				**EW32SBG, EW50 □ BG, EW63 □ BG EW50RBGU**			
Accessory type	Left side		Right side		Left side		Right side	
	Position	Ring mark	Position	Ring mark	Position	Ring mark	Position	Ring mark
Auxiliary switch	Cannot be mounted.		①	—	①	—	Can be mounted on the right side as well by purchasing a separately sold product (for right-side mounting).	
			②	—	②	—		
			③	—	③	—		
			④	21/AXcR	④	11/AXcL		
			⑤	22/AXbR	⑤	12/AXbL		
W(1)* A			⑥	24/AXaR	⑥	14/AXaL		
Auxiliary switch x 2	Cannot be mounted.				①	—	⑦	—
					②	—	⑧	—
					③	—	⑨	—
					④	11/AXcL	⑩	21/AXcR
					⑤	12/AXbL	⑪	22/AXbR
V(2)* A					⑥	14/AXaL	⑫	24/AXaR
Alarm switch	Cannot be mounted.		①	04/ALaR	①	94/ALaL	Can be mounted on the right side as well by purchasing a separately sold product (for right-side mounting).	
			②	02/ALbR	②	92/ALbL		
			③	01/ALcR	③	91/ALcL		
			④	—	④	—		
			⑤	—	⑤	—		
K(8)* A			⑥	—	⑥	—		
Auxiliary switch + alarm switch	Cannot be mounted.		①	04/ALaR	①	94/ALaL	Can be mounted on the right side as well by purchasing a separately sold product (for right-side mounting).	
			②	02/ALbR	②	92/ALbL		
			③	01/ALcR	③	91/ALcL		
			④	21/AXcR	④	11/AXcL		
			⑤	22/AXbR	⑤	12/AXbL		
W(1)* K(8)* A			⑥	24/AXaR	⑥	14/AXaL		
Auxiliary switch x 2 + alarm switch	Cannot be mounted.				①	94/ALaL	⑦	—
					②	92/ALbL	⑧	—
					③	91/ALcL	⑨	—
					④	11/AXcL	⑩	21/AXcR
					⑤	12/AXbL	⑪	22/AXbR
V(2)* K(8)* A					⑥	14/AXaL	⑫	24/AXaR
Shunt trip device	Cannot be mounted.				①	—	Cannot be mounted.	
					②	—		
					③	—		
					④	C2/S2		
					⑤	—		
F □ A					⑥	C1/S1		
Auxiliary switch + shunt trip device	Cannot be mounted.				①	—	⑦	—
					②	—	⑧	—
					③	—	⑨	—
					④	C2/S2	⑩	21/AXcR
					⑤	—	⑪	22/AXbR
W(1)* F □ A					⑥	C1/S1	⑫	24/AXaR
Auxiliary switch + shunt trip device	Cannot be mounted.				①	—	⑦	04/ALaR
					②	—	⑧	02/ALbR
					③	—	⑨	01/ALcR
					④	C2/S2	⑩	—
					⑤	—	⑪	—
K(8)* F □ A					⑥	C1/S1	⑫	—
Auxiliary switch + alarm switch + shunt trip device	Cannot be mounted.				①	—	⑦	04/ALaR
					②	—	⑧	02/ALbR
					③	—	⑨	01/ALcR
					④	C2/S2	⑩	21/AXcR
					⑤	—	⑪	22/AXbR
W(1)* K(8)* F □ A					⑥	C1/S1	⑫	24/AXaR

Molded Case Circuit Breakers / Earth Leakage Circuit Breakers
G-TWIN Λ (Lambda) Series Accessories

Lead wire type	ELCB (2P)				ELCB (3P)			
	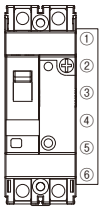				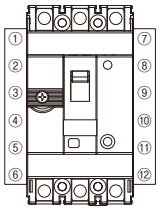			
Type	**EW32SBG, EW50 □ BG, EW63 □ BG EW50RBGU**				**EW32SBG, EW50 □ BG, EW63 □ BG EW50RBGU**			
Accessory type	Left side		Right side		Left side		Right side	
	Position	Ring mark	Position	Ring mark	Position	Ring mark	Position	Ring mark
Undervoltage trip device	Cannot be mounted.				①	—	Cannot be mounted.	
					②	—		
					③	—		
					④	D2/P2		
					⑤	—		
R □					⑥	D1/P1		
Auxiliary switch + Undervoltage trip device	Cannot be mounted.				①	—	⑦	—
					②	—	⑧	—
					③	—	⑨	—
					④	D2/P2	⑩	21/AXcR
					⑤	—	⑪	22/AXbR
W(1)* R □ A					⑥	D1/P1	⑫	24/AXaR
Alarm switch + Undervoltage trip device	Cannot be mounted.				①	—	⑦	04/ALaR
					②	—	⑧	02/ALbR
					③	—	⑨	01/ALcR
					④	D2/P2	⑩	—
					⑤	—	⑪	—
K(8)* R □ A					⑥	D1/P1	⑫	—
Auxiliary switch + alarm switch + Undervoltage trip device	Cannot be mounted.				①	—	⑦	04/ALaR
					②	—	⑧	02/ALbR
					③	—	⑨	01/ALcR
					④	D2/P2	⑩	21/AXcR
					⑤	—	⑪	22/AXbR
W(1)* K(8)* R □ A					⑥	D1/P1	⑫	24/AXaR
Trip lead	Cannot be mounted.		①	TL1	Cannot be mounted.		⑦	TL1
			②	—			⑧	—
			③	TL2			⑨	TL2
			④	—			⑩	—
			⑤	—			⑪	—
T			⑥	—			⑫	—
Auxiliary switch + trip lead	Cannot be mounted.				①	—	⑦	TL1
					②	—	⑧	—
					③	—	⑨	TL2
					④	11/AXcL	⑩	—
					⑤	12/AXbL	⑪	—
W(1)* T A					⑥	14/AXaL	⑫	—
Alarm switch + trip lead	Cannot be mounted.				①	94/ALaL	⑦	TL1
					②	92/ALbL	⑧	—
					③	91/ALcL	⑨	TL2
					④	—	⑩	—
					⑤	—	⑪	—
K(8)* T A					⑥	—	⑫	—
Auxiliary switch + alarm switch + trip lead	Cannot be mounted.				①	94/ALaL	⑦	TL1
					②	92/ALbL	⑧	—
					③	91/ALcL	⑨	TL2
					④	11/AXcL	⑩	—
					⑤	12/AXbL	⑪	—
W(1)* K(8)* T A					⑥	14/AXaL	⑫	—

Note: * ( ) code of Low level circuit
Remarks
1) The undervoltage trip device is factory-mounted when the product is shipped. Specify in the order for the main unit.
2) The trip lead cannot be mounted on the global product (EW50RBGU).
3) The trip lead is factory-mounted when the product is shipped. Specify in the order for the main unit.

Fuji Electric FA Components & Systems Co., Ltd.
Information subject to change without notice

Molded Case Circuit Breakers / Earth Leakage Circuit Breakers
G-TWIN Λ (Lambda) Series Accessories

(4) Operations and ratings of auxiliary and alarm switches [IEC 60947-5-1, JIS C 8201-5-1]

(a) Operations of auxiliary and alarm switches

Type of switches		State of MCCB/ELCB		
		ON	OFF	Tripped
Auxiliary switch	For left side		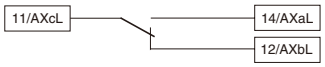	
	For right side		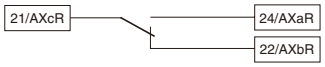	
Alarm switch	For left side	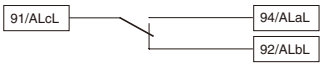		
	For right side	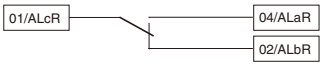		

(b) Ratings of auxiliary and alarm switches

	IEC60947-5-1			Reference: NECA C4505		Minimum load
	Voltage [V]	Switching current [A]		Voltage [V]	Switching current [A]	
		AC15	DC13		Resistive load	
Standard type	125V AC	5	–	125V AC	5	5V DC 160mA 30V DC 30mA
	250V AC	5	–	250V AC	3	
	–	–	–	30V DC	4	
	125V DC	–	0.6	125V DC	0.4	
	250V DC	–	0.3	250V DC	0.2	
Microload	–	–	–	30V DC	0.1	5V DC 1mA

(5) Shunt trip device

● Ratings of shunt trip device

Main unit applicable type (basic designation)		Mounting position	AC		DC		Voltage rating	Product code	Time rating	Operating time [ms]
MCCB	ELCB		Voltage [V]	Input [VA]	Voltage [V]	Input [W]				
BW32 **BW50** **BW63**	**EW32** **EW50** **EW63**	Built-in	24	40	24	40	24V AC/DC	FR	Continuous (With burn-out preventive contact)	6-13
			100-130 (50/60Hz)	60	100-110	60	100-130V AC/ 100-110V DC	F6		
			200-240 (50/60Hz)	70	200-220	70	200-240V AC/ 200-220V DC	FK		
			380-440 (50/60Hz)	70	–	–	380-440V AC	FP		

Note 1: Specify the voltage rating in the order.
Note 2: The operating range of the trip voltage of the shunt trip device is 70 to 110% of the rated operating voltage.

(6) Undervoltage trip device

● Ratings of undervoltage trip device

Main unit applicable type (basic designation)		Mounting position	AC		DC		Voltage rating	Product code
MCCB	ELCB		Voltage [V]	Input [VA]	Voltage [V]	Input [W]		
BW32 **BW50** **BW63**	**EW32** **EW50** **EW63**	External	–	–	24	1	24V DC	RR
					100-110	2	100-110V DC	RL
			24	1	–	–	24V AC	RZ
			100-130	3	–	–	100-130V AC	R6
			200-240	5	–	–	200-240V AC	R4
			380-415	8	–	–	380-415V AC	RP
			400-440	9	–	–	400-440V AC	RO

Note 1: Specify the voltage rating in the order.
Note 2: The pick-up voltages of the undervoltage trip device are: Trip voltage: 70 to 35% of the rated voltage; voltage allowing closing operation: 85% to 110% of the rated voltage

(7) Accessory lead wire pull-out system

● Specifications of lead wire

Type of lead wire	Size of lead wire	Length of lead wire	Indication on lead wire
32 to 63AF	0.4mm^2 (AWG22)	About 500mm	Each lead wire has a ring mark indicating a terminal symbol.

■ External Accessories

(1) Variation of external accessories

The following shows various external accessories.

External operating handle (N type)
Page B1-201

Terminal cover (long type)
Page B1-201

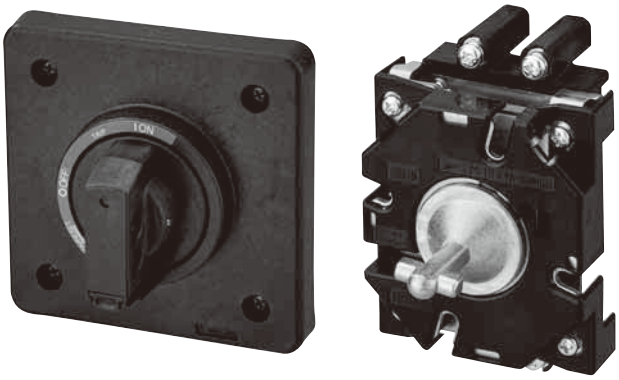

External operating handle (V type)
Page B1-201

Interphase barrier
Page B1-201

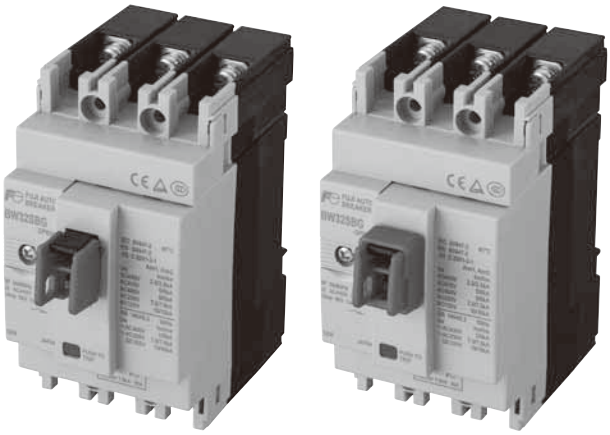

Padlock-compatible type

Handle locking cover (cap type: L1)
Page B1-201

Terminal cover (short type)
Page B1-201

Molded Case Circuit Breakers / Earth Leakage Circuit Breakers
G-TWIN Λ (Lambda) Series Accessories

■ List of Separately Sold Parts

Product name	Specification		Type (i.e., product code)	Quantity/ type
Auxiliary switch	Standard	Lead wire type left side pull-out	**BW9W1SB1**	1
		Lead wire type right side pull-out	**BW9W1SB1-R**	1
		Terminal block type left side mounting	**BW9W1SB1-A**	1
		Terminal block type right side mounting	**BW9W1SB1-RA**	1
	Low level circuit	Lead wire type left side pull-out	**BW9W1DB1**	1
		Lead wire type right side pull-out	**BW9W1DB1-R**	1
		Terminal block type left side mounting	**BW9W1DB1-A**	1
		Terminal block type right side mounting	**BW9W1DB1-RA**	1
Alarm switch	Standard	Lead wire type left side pull-out	**BW9K1SB1**	1
		Lead wire type right side pull-out	**BW9K1SB1-R**	1
		Terminal block type left side mounting	**BW9K1SB1-A**	1
		Terminal block type right side mounting	**BW9K1SB1-RA**	1
	Low level circuit	Lead wire type left side pull-out	**BW9K1DB1**	1
		Lead wire type right side pull-out	**BW9K1DB1-R**	1
		Terminal block type left side mounting	**BW9K1DB1-A**	1
		Terminal block type right side mounting	**BW9K1DB1-RA**	1
Auxiliary/alarm switch	Standard	Lead wire type left side pull-out	**BW9WKSB1**	1
		Lead wire type right side pull-out	**BW9WKSB1-R**	1
		Terminal block type left side mounting	**BW9WKSB1-A**	1
		Terminal block type right side mounting	**BW9WKSB1-RA**	1
	Low level circuit	Lead wire type left side pull-out	**BW9WKDB1**	1
		Lead wire type right side pull-out	**BW9WKDB1-R**	1
		Terminal block type left side mounting	**BW9WKDB1-A**	1
		Terminal block type right side mounting	**BW9WKDB1-RA**	1
Shunt trip device	24V AC/DC	Lead wire type left side pull-out	**BW9FRB1**	1
	100-130V AC/100-110V DC		**BW9F6B1**	1
	200-240V AC/200-220V DC		**BW9FKB1**	1
	380-440V AC		**BW9FPB1**	1
	24V AC/DC	Terminal block type left side mounting	**BW9FRB1-A**	1
	100-130V AC/100-110V DC		**BW9F6B1-A**	1
	200-240V AC/200-220V DC		**BW9FKB1-A**	1
	380-440V AC		**BW9FPB1-A**	1
External operating handle	V type (panel mounting)	RESET-open	**BW9V0BA**	1
		OFF-open	**BW9V0BA-G**	1
		RESET-open for emergency stop	**BW9V0BA-E**	1
		OFF-open for emergency stop	**BW9V0BA-EG**	1
	N type (main unit mounting)	RESET-open	**BW9N0BA**	1
		OFF-open	**BW9N0BA-G**	1
		RESET-open for emergency stop	**BW9N0BA-E**	1
		OFF-open for emergency stop	**BW9N0BA-EG**	1
Terminal cover	Short type	Manually-detachable, 2-pole, transparent	**BW9BTBA-S2**	2
		Manually-detachable, 2-pole, light gray	**BW9BTBA-S2W**	2
		Manually-detachable, 3-pole, transparent	**BW9BTBA-S3**	2
		Manually-detachable, 3-pole, light gray	**BW9BTBA-S3W**	2
		Tool-detachable, 2-pole, transparent	**BW9BTBA-S2H**	2
		Tool-detachable, 2-pole, light gray	**BW9BTBA-S2WH**	2
		Tool-detachable, 3-pole, transparent	**BW9BTBA-S3H**	2
		Tool-detachable, 3-pole, light gray	**BW9BTBA-S3WH**	2
	Long type	Manually-detachable, 2-pole, transparent	**BW9BTBA-L2**	2
		Manually-detachable, 2-pole, light gray	**BW9BTBA-L2W**	2
		Manually-detachable, 3-pole, transparent	**BW9BTBA-L3**	2
		Manually-detachable, 3-pole, light gray	**BW9BTBA-L3W**	2
		Tool-detachable, 2-pole, transparent	**BW9BTBA-L2H**	2
		Tool-detachable, 2-pole, light gray	**BW9BTBA-L2WH**	2
		Tool-detachable, 3-pole, transparent	**BW9BTBA-L3H**	2
		Tool-detachable, 3-pole, light gray	**BW9BTBA-L3WH**	2
Insulation barrier	Interphase barrier		**BW9BPBA**	4
Handle locking cover	Cap type L1	–	**BW9L1BA**	1
		Padlock-compatible type	**BW9L1BA-P**	1
Handle key lock	Plate type Q2		**BW9Q2BA**	1

Note: See the internal accessory combinations (pages B1-191 to B1-198) to check mountability.

Molded Case Circuit Breakers / Earth Leakage Circuit Breakers
G-TWIN Λ (Lambda) Series Data, Characteristics curves, Dimensions

■ BW32, 50, 63□BG

Basic type				BW32SBG		BW50EBG		BW50SBG	
Number of poles				2	3	2	3	2	3
Rated insulation voltage [V]		AC		440		440		440	
		DC		125		125		125	
Rated breaking capacity	IEC60947-2 EN60947-2 JISC8201-2-1 Icu/Ics [kA]	AC	440V	2.5/2.5		2.5/2.5		7.5/4	
			415V	5/5		5/5		10/5	
			400V	5/5		5/5		10/5	
			380V	5/5		5/5		10/5	
			240V	7.5/7.5		7.5/7.5		15/15	
			230V	7.5/7.5		7.5/7.5		15/15	
		DC	125V	10/10		–/–		10/10	
	GB14048.2 Icu/Ics [kA]	AC	400V	5/5		5/5		10/5	
			230V	7.5/7.5		7.5/7.5		15/15	
		DC	125V	10/10		–/–		10/10	

Basic type				BW63EBG		BW63SBG	
Number of poles				2	3	2	3
Rated insulation voltage [V]		AC		440		440	
		DC		125		125	
Rated breaking capacity	IEC60947-2 EN60947-2 JISC8201-2-1 Icu/Ics [kA]	AC	440V	2.5/2.5		7.5/4	
			415V	5/5		10/5	
			400V	5/5		10/5	
			380V	5/5		10/5	
			240V	7.5/7.5		15/15	
			230V	7.5/7.5		15/15	
		DC	125V	–/–		10/10	
	GB14048.2 Icu/Ics [kA]	AC	400V	5/5		10/5	
			230V	7.5/7.5		15/15	
		DC	125V	–/–		10/10	

● Optional accessories

Product name					Type symbol (i.e., symbol code)	See page:
Internal accessories	Auxiliary switch (lead wire type)	Standard		1	W	B1-199
				2	V	B1-199
		Low level circuit		1	1	B1-199
				2	2	B1-199
	Alarm switch (lead wire type)	Standard		1	K	B1-199
		Low level circuit		1	8	B1-199
	Shunt trip device (lead wire type)	24V AC/DC			FR	B1-199
		100-130V AC/100-110V DC			F6	B1-199
		200-240V AC/200-220V DC			FK	B1-199
		380-440V AC			FP	B1-199
	Lead wire terminal block			1	A	B1-204
				2	A	B1-204
	Undervoltage trip device (terminal block type only)	24V DC			RR	B1-199
		100-110V DC			RL	B1-199
		24V AC			RZ	B1-199
		100-130V AC			R6	B1-199
		200-240V AC			R4	B1-199
		380-415V AC			RP	B1-199
		400-440V AC			RO	B1-199

● List of product ratings

Specification for □ : rated current (code)

Product	Basic type (i.e., product code)	Rated current [A]	Code for □
Line protection use (standard products)	**BW32SBG-2P□**	3	003
		5	005
		10	010
		15	015
		20	020
		30	030
		32	032
	BW32SBG-3P□	3	003
		5	005
		10	010
		15	015
		20	020
		30	030
		32	032
	BW50EBG-2P□	3	003
		5	005
		10	010
		15	015
		20	020
		30	030
		32	032
		40	040
		50	050
	BW50EBG-3P□	3	003
		5	005
		10	010
		15	015
		20	020
		30	030
		32	032
		40	040
		50	050
	BW50SBG-2P□	3	003
		5	005
		10	010
		15	015
		20	020
		30	030
		32	032
		40	040
		50	050
	BW50SBG-3P□	3	003
		5	005
		10	010
		15	015
		20	020
		30	030
		32	032
		40	040
		50	050
	BW63EBG-2P□	60	060
		63	063
	BW63EBG-3P□	60	060
		63	063
	BW63SBG-2P□	60	060
		63	063
	BW63SBG-3P□	60	060
		63	063

● Attached components

- Terminal screw 2P: 4 screws, 3P: 6 screws
- Interphase barrier 2P: 2 barriers, 3P: 4 barriers (provided for BW63EBG and BW63SBG only)
- Instruction Manual

Note 1: Mounting screws are not included. When necessary, use commercially-available screws (recommended size: M4 x 60).

Fuji Electric FA Components & Systems Co., Ltd.
Information subject to change without notice

Molded Case Circuit Breakers / Earth Leakage Circuit Breakers
G-TWIN Λ (Lambda) Series Data, Characteristics curves, Dimensions

● Characteristic Curves

3A, 5A

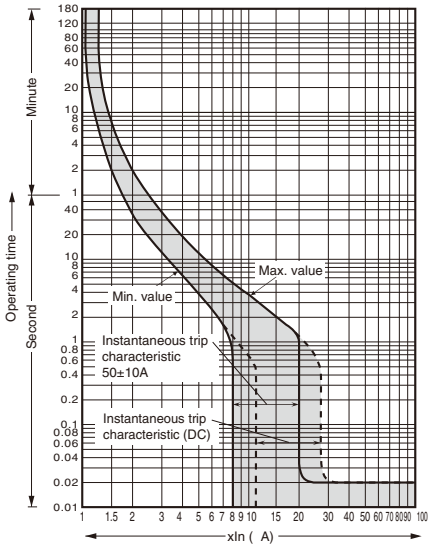

10 to 30A

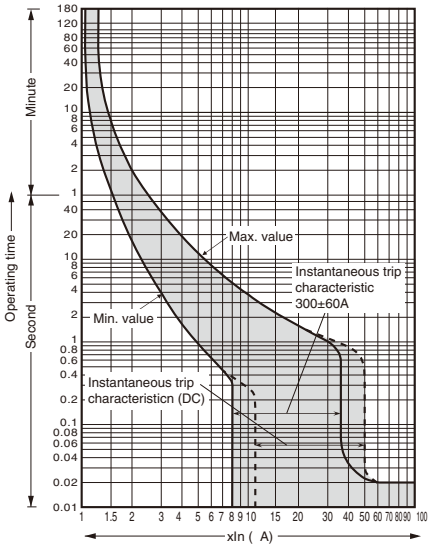

32 to 50A

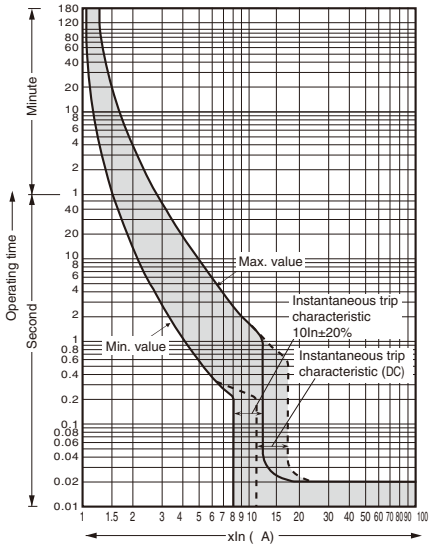

60A, 63A

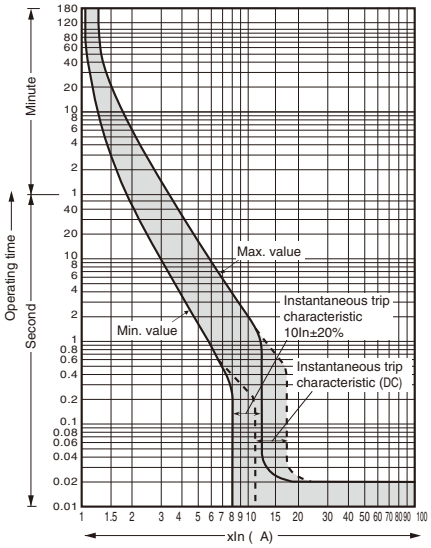

● Temperature correction curve

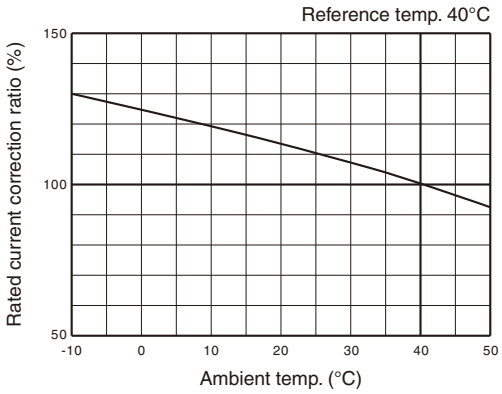

Molded Case Circuit Breakers / Earth Leakage Circuit Breakers
G-TWIN Λ (Lambda) Series Data, Characteristics curves, Dimensions

● Dimensions, mm

Front mounting type

• 2-pole

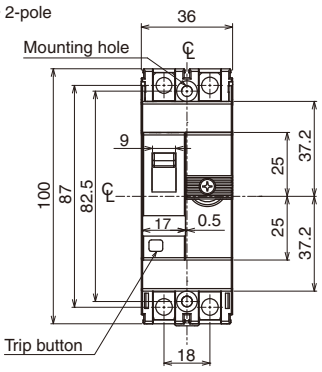

• 3-pole

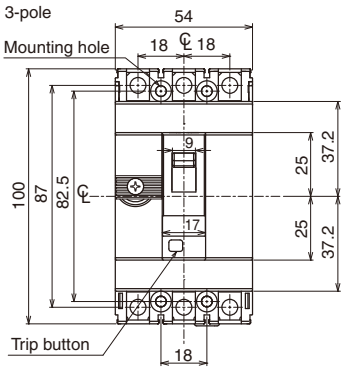

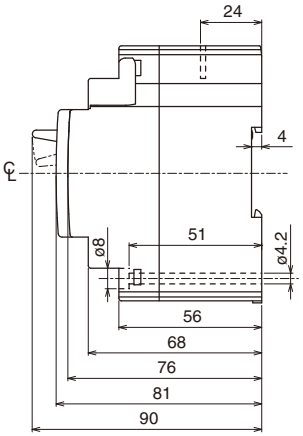

• 2-pole

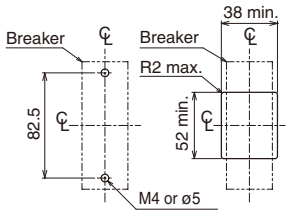

Panel drilling Front panel cutting

• 3-pole

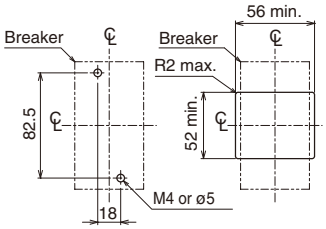

Panel drilling Front panel cutting

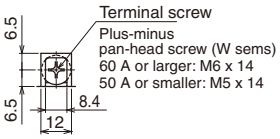

Terminal section detail

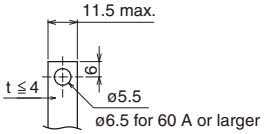

Processing of conductor directly mounted on main unit

Interphase barrier

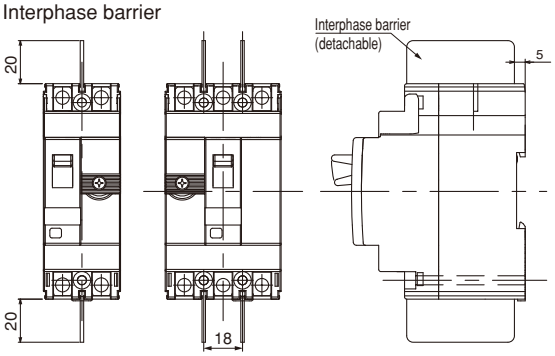

2P 3P

Lead wire terminal block *1*2

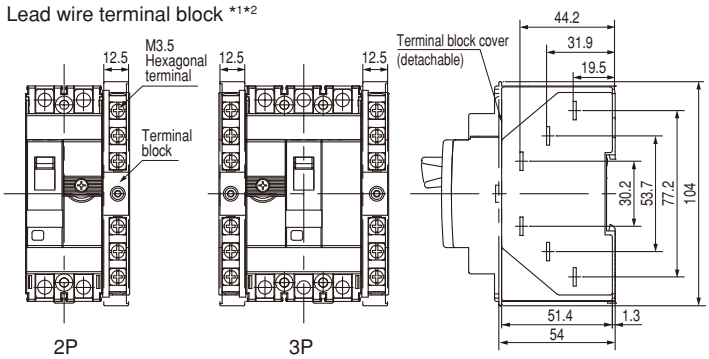

2P 3P

Terminal cover (short)

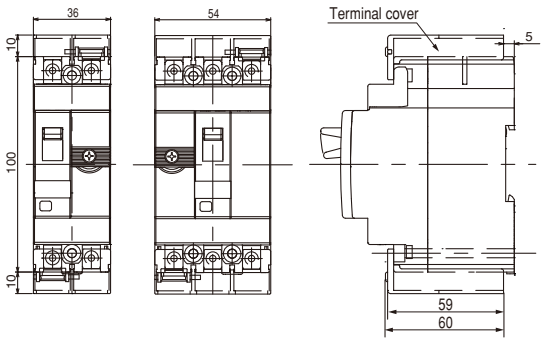

2P 3P

Terminal cover (long)

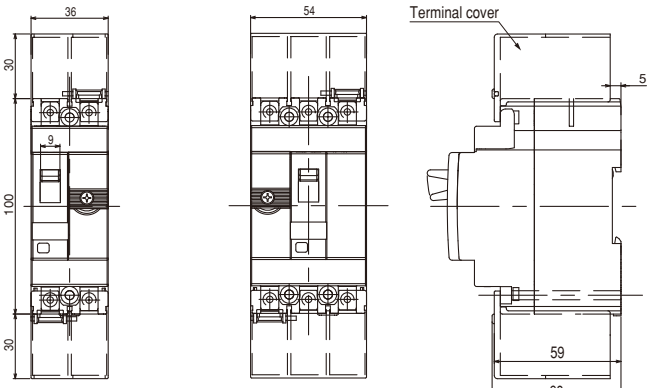

2P 3P

(Note *1) The terminal block is mounted on the accessory mounting side. For the accessory mounting positions, see the List of internal accessory combinations on pages B1-195 to B1-198.
(Note *2) Connectable wire: single wire: 1 to 1.6 ø, stranded wire: 0.5 to 2 mm²

Fuji Electric FA Components & Systems Co., Ltd.
Information subject to change without notice

Molded Case Circuit Breakers / Earth Leakage Circuit Breakers G-TWIN Λ (Lambda) Series Data, Characteristics curves, Dimensions

■ BW50RBGU (UL489 Listed)

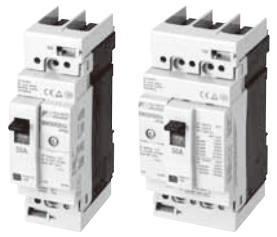

Basic type				BW50RBGU	
Number of poles				2	3
Rated insulation voltage [V]		AC		440	
		DC		125	
Rated breaking capacity	UL489 CAN/CSA C22.2 No.5 (kA)	AC	240V	18	
	IEC60947-2 EN60947-2 JISC8201-2-1 Icu/Ics (kA)	AC	440V	7.5/4	
			415V	10/5	
			400V	10/5	
			380V	10/5	
			240V	15/15	
			230V	15/15	
		DC	125V	10/10	
	GB14048.2 Icu/Ics (kA)	AC	400V	10/5	
			230V	15/15	
		DC	125V	10/10	

● Attached components

- Terminal cover 2
- Terminal screw 2P: 4 screws, 3P: 6 screws
- Instruction Manual

Note 1: Mounting screws are not included. When necessary, use commercially-available screws (recommended size: M4 x 60).

● Optional accessories

Product name				Type symbol (i.e., symbol code)	See page:
Internal accessories	Auxiliary switch (lead wire type)	Standard	1	W	B1-199
			2	V	B1-199
		Low level circuit	1	1	B1-199
			2	2	B1-199
	Alarm switch (lead wire type)	Standard	1	K	B1-199
		Low level circuit	1	8	B1-199
	Shunt trip device (lead wire type)	24V AC/DC		FR	B1-199
		100-130V AC/100-110V DC		F6	B1-199
		200-240V AC/200-220V DC		FK	B1-199
		380-440V AC		FP	B1-199
	Lead wire terminal block		1	A	B1-207
			2	A	B1-207
	Undervoltage trip device (terminal block type only)	24V DC		RR	B1-199
		100-110V DC		RL	B1-199
		24V AC		RZ	B1-199
		100-130V AC		R6	B1-199
		200-240V AC		R4	B1-199
		380-415V AC		RP	B1-199
		400-440V AC		RO	B1-199

● List of product ratings

Specification for □ : Rated current (code)

Product	Basic type	Rated current [A]	Code for □
Line protection use (UL489 Listed)	**BW50RBGU-2P□**	3	003
		5	005
		10	010
		15	015
		20	020
		30	030
		40	040
		50	050
	BW50RBGU-3P□	3	003
		5	005
		10	010
		15	015
		20	020
		30	030
		40	040
		50	050

Molded Case Circuit Breakers / Earth Leakage Circuit Breakers
G-TWIN Λ (Lambda) Series Data, Characteristics curves, Dimensions

● Characteristic Curves

3A, 5A

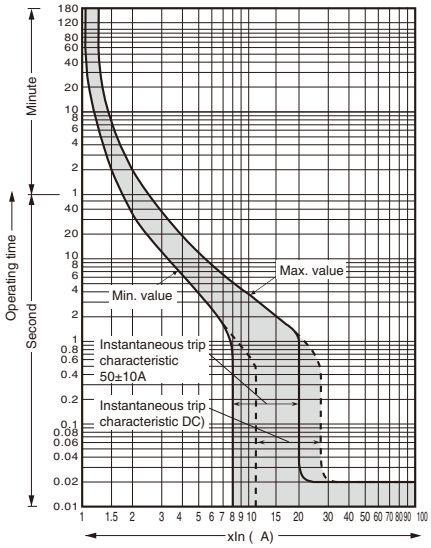

10 to 30A

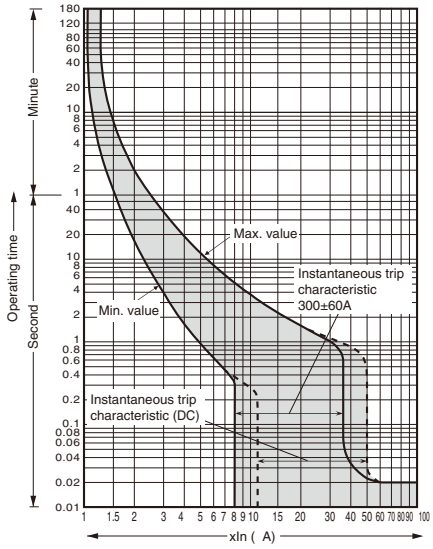

40A, 50A

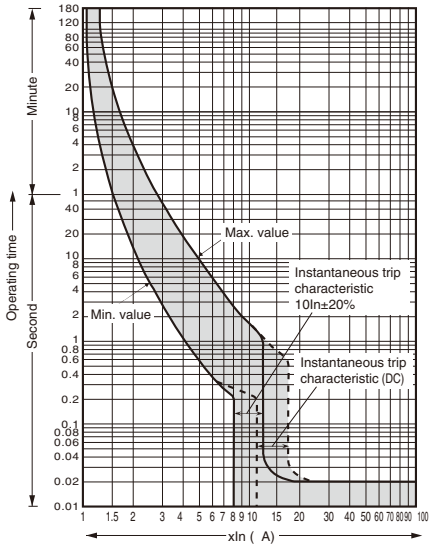

● Temperature correction curve

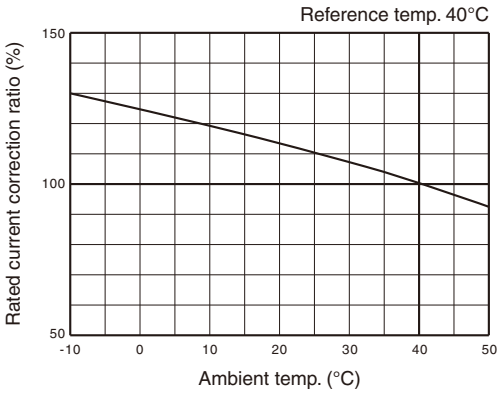

Molded Case Circuit Breakers / Earth Leakage Circuit Breakers
G-TWIN Λ (Lambda) Series Data, Characteristics curves, Dimensions

● Dimensions, mm

Front mounting type

• 2-pole

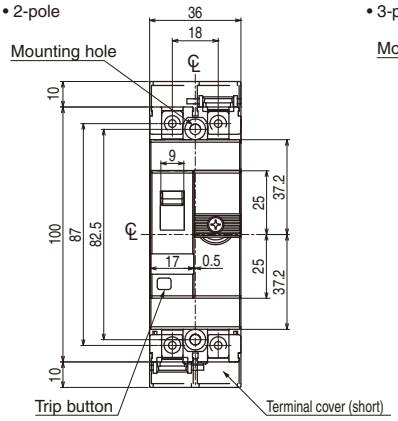

• 3-pole

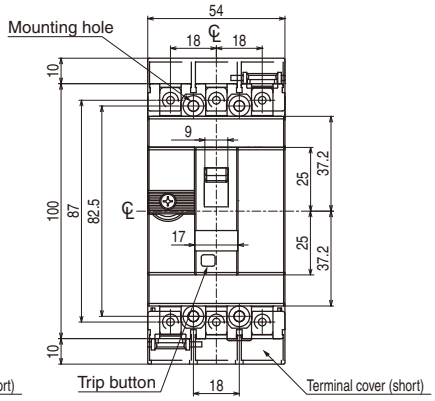

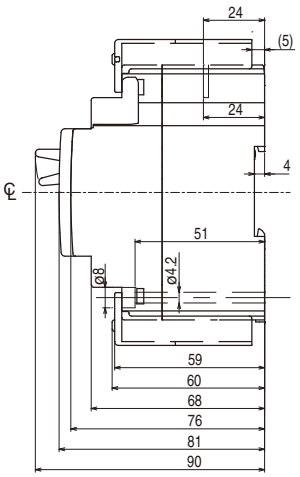

• 2-pole

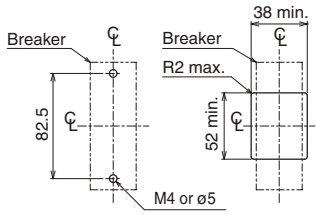

Panel drilling　Front panel cutting

• 3-pole

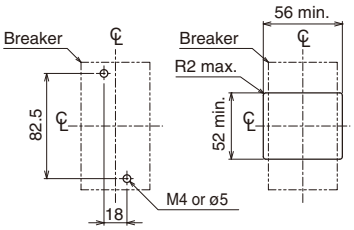

Panel drilling　Front panel cutting

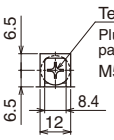

Terminal section detail

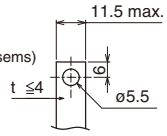

Processing of conductor directly mounted on main unit

Lead wire terminal block *1*2

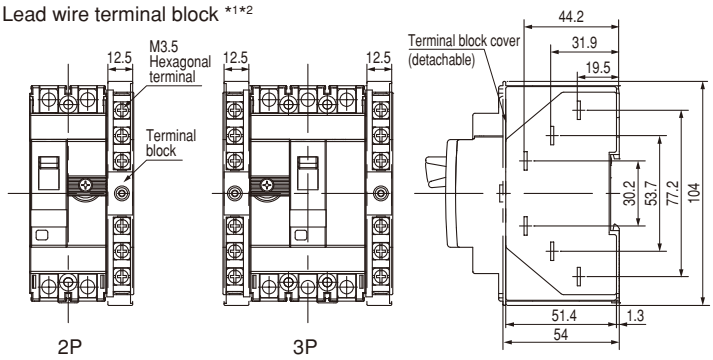

Terminal cover (long)

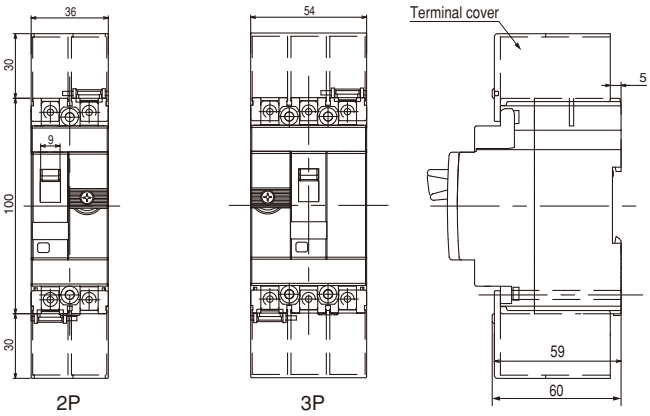

(Note *1) The terminal block is mounted on the accessory mounting side. For the accessory mounting positions, see the List of internal accessory combinations on pages B1-195 to B1-198.
(Note *2) Connectable wire: single wire: 1 to 1.6 ø, stranded wire: 0.5 to 2 mm²

Molded Case Circuit Breakers / Earth Leakage Circuit Breakers
G-TWIN Λ (Lambda) Series Data, Characteristics curves, Dimensions

■ EW32, 50, 63□BG (Standard Product)

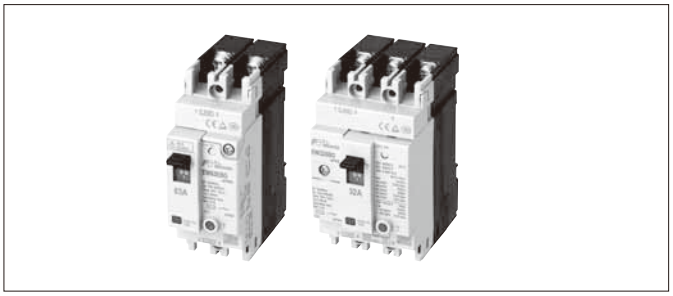

Basic type				EW32SBG		EW50EBG		EW50SBG	
Number of poles				2	3	2	3	2	3
Rated operational voltage AC [V]				100-240	100-440	100-240	100-440	100-240	100-440
Rated sensitive current [mA]				30	30,100,200,500	30	30,100,200,500	30	30,100,200,500
Maximum operating time [s]				0.1		0.1		0.1	
Rated breaking capacity	IEC60947-2 EN60947-2 JISC8201-2-2 Icu/Ics [kA]	AC	440V	–/–	2.5/2.5	–/–	2.5/2.5	–/–	7.5/4
			415V	–/–	5/5	–/–	5/5	–/–	10/5
			400V	–/–	5/5	–/–	5/5	–/–	10/5
			380V	–/–	5/5	–/–	5/5	–/–	10/5
			240V	7.5/7.5	7.5/7.5	7.5/7.5	7.5/7.5	15/15	15/15
			230V	7.5/7.5	7.5/7.5	7.5/7.5	7.5/7.5	15/15	15/15
			100V	7.5/7.5	7.5/7.5	7.5/7.5	7.5/7.5	15/15	15/15
	GB14048.2 Icu/Ics [kA]	AC	400V	–/–	5/5	–/–	5/5	–/–	10/5
			230V	7.5/7.5	7.5/7.5	7.5/7.5	7.5/7.5	15/15	15/15

Basic type				EW63EBG		EW63SBG	
Number of poles				2	3	2	3
Rated operational voltage AC [V]				100-240	100-440	100-240	100-440
Rated sensitive current [mA]				30	30,100,200,500	30	30,100,200,500
Maximum operating time [s]				0.1		0.1	
Rated breaking capacity	IEC60947-2 EN60947-2 JISC8201-2-2 Icu/Ics [kA]	AC	440V	–/–	2.5/2.5	–/–	7.5/4
			415V	–/–	5/5	–/–	10/5
			400V	–/–	5/5	–/–	10/5
			380V	–/–	5/5	–/–	10/5
			240V	7.5/7.5	7.5/7.5	15/15	15/15
			230V	7.5/7.5	7.5/7.5	15/15	15/15
			100V	7.5/7.5	7.5/7.5	15/15	15/15
	GB14048.2 Icu/Ics [kA]	AC	400V	–/–	5/5	–/–	10/5
			230V	7.5/7.5	7.5/7.5	15/15	15/15

● Optional accessories

Product name				Type symbol (i.e., symbol code)	See page:
Internal accessories	Auxiliary switch (lead wire type)	Standard	1	W	B1-199
			2	V	B1-199
		Low level circuit	1	1	B1-199
			2	2	B1-199
	Alarm switch (lead wire type)	Standard	1	K	B1-199
		Low level circuit	1	8	B1-199
	Shunt trip device (lead wire type)	24V AC/DC		FR	B1-199
		100-130V AC/100-110V DC		F6	B1-199
		200-240V AC/200-220V DC		FK	B1-199
		380-440V AC		FP	B1-199
	Lead wire terminal block		1	A	B1-210
			2	A	B1-210
	Undervoltage trip device (terminal block type only)	24V DC		RR	B1-199
		100-110V DC		RL	B1-199
		24V AC		RZ	B1-199
		100-130V AC		R6	B1-199
		200-240V AC		R4	B1-199
		380-415V		RP	B1-199
		AC400-440V		RO	B1-199
	Trip lead (terminal block type only)			T	B1-199

● List of product ratings

Specification for □ : Rated current (code)
Specification for ■ : Rated sensitive current (code)

Product	Basic type (i.e., product code)	Rated current [A]	Code for □	Rated sensitive current [mA]	Code for ■
Line protection use (standard products)	**EW32SBG-2P□■**	5	005	30	B
		10	010		
		15	015		
		20	020		
		30	030		
		32	032		
	EW32SBG-3P□■	5	005	30	B
		10	010	100	C
		15	015	200	E
		20	020	500	H
		30	030		
		32	032		
	EW50EBG-2P□■	5	005	30	B
		10	010		
		15	015		
		20	020		
		30	030		
		32	032		
		40	040		
		50	050		
	EW50EBG-3P□■	5	005	30	B
		10	010	100	C
		15	015	200	E
		20	020	500	H
		30	030		
		32	032		
		40	040		
		50	050		
	EW50SBG-2P□■	5	005	30	B
		10	010		
		15	015		
		20	020		
		30	030		
		32	032		
		40	040		
		50	050		
	EW50SBG-3P□■	5	005	30	B
		10	010	100	C
		15	015	200	E
		20	020	500	H
		30	030		
		32	032		
		40	040		
		50	050		
	EW63EBG-2P□■	60	060	30	B
		63	063		
	EW63EBG-3P□■	60	060	30	B
		63	063	100	C
				200	E
				500	H
	EW63SBG-2P□■	60	060	30	B
		63	063		
	EW63SBG-3P□■	60	060	30	B
		63	063	100	C
				200	E
				500	H

● Attached components

- Terminal screw 2P: 2 screws, 3P: 4 screws
- Interphase barrier 2P: 2 barriers, 3P: 4 barriers (provided for EW63EBG and EW63SBG only)
- Instruction Manual

Note 1: Mounting screws are not included. When necessary, use commercially-available screws (recommended size: M4 x 60).

Molded Case Circuit Breakers / Earth Leakage Circuit Breakers
G-TWIN Λ (Lambda) Series Data, Characteristics curves, Dimensions

● Characteristic Curves

5A

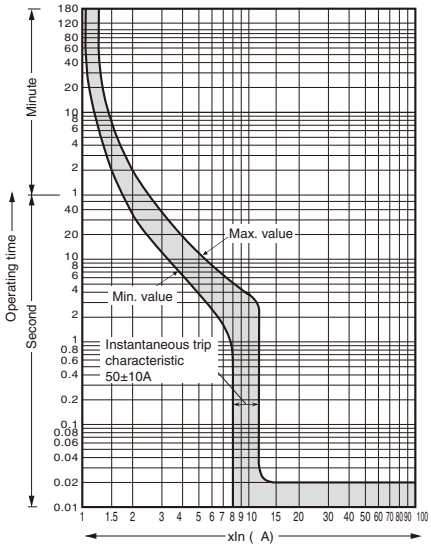

10 to 30A

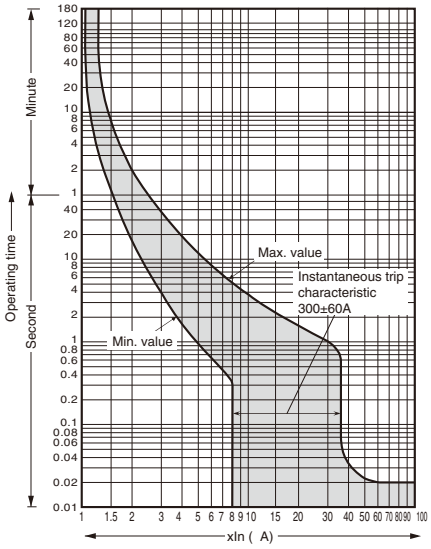

32 to 50A

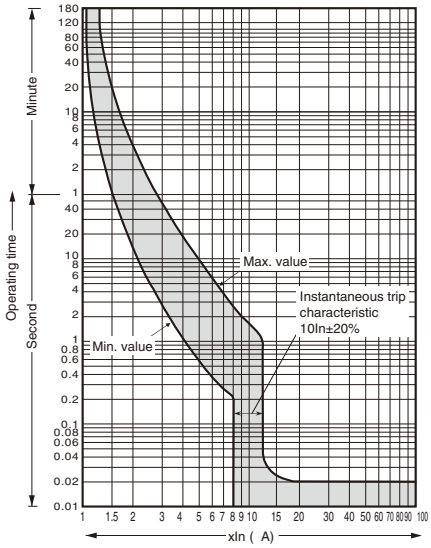

60A, 63A

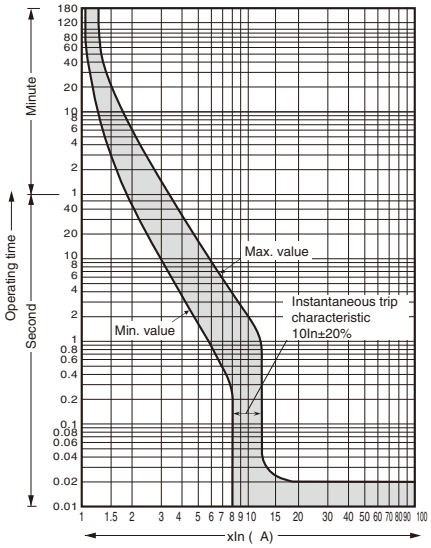

● Temperature correction curve

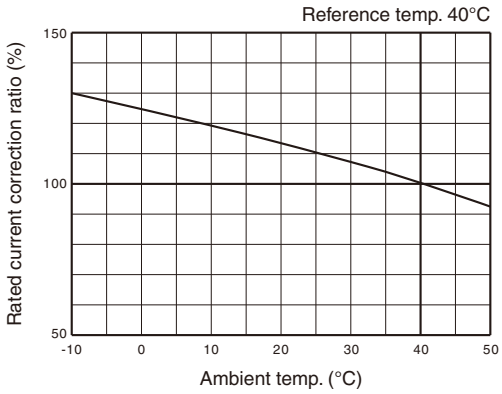

● Earth leakage tripping

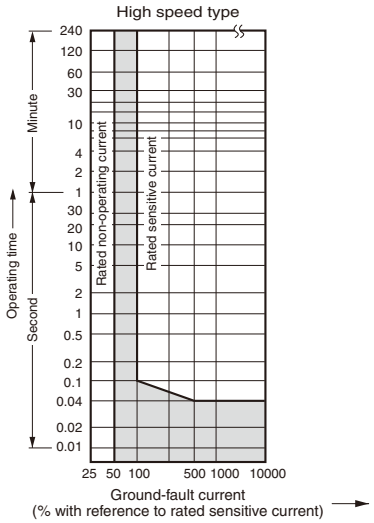

● Dimensions, mm

Front mounting type

• 2-pole

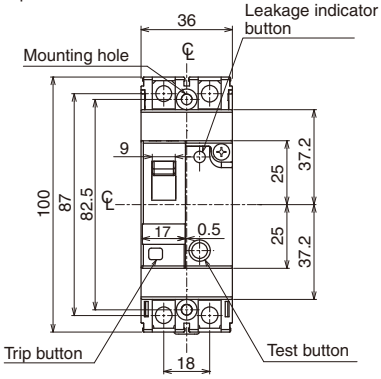

• 3-pole

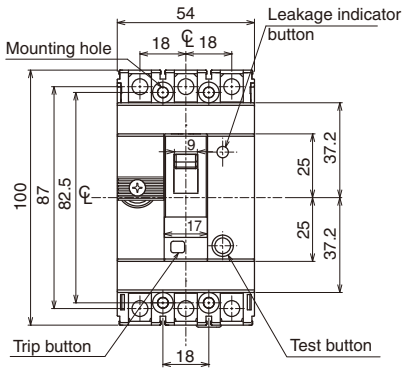

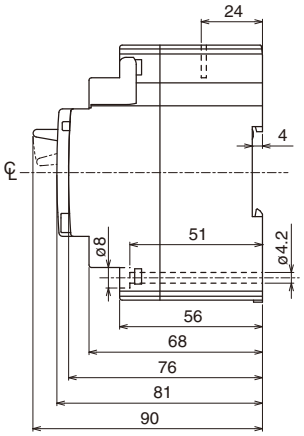

• 2-pole

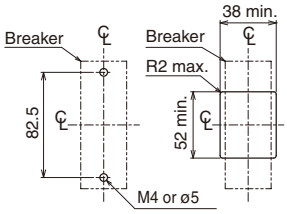

Panel drilling Front panel cutting

• 3-pole

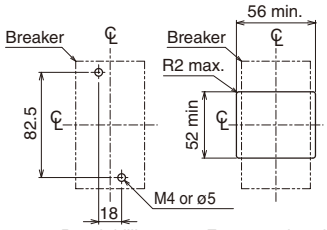

Panel drilling Front panel cutting

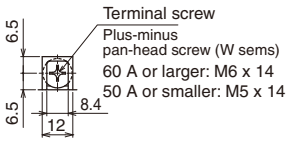

Terminal section detail

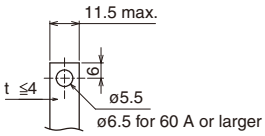

Processing of conductor directly mounted on main unit

Interphase barrier

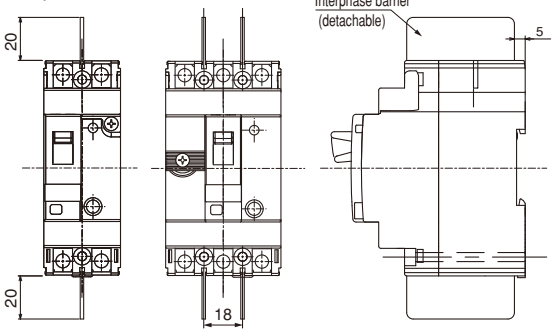

2P 3P

Lead wire terminal block *1*2

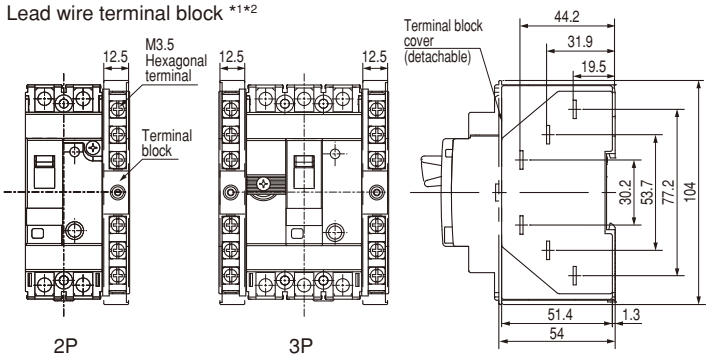

2P 3P

Terminal cover (short)

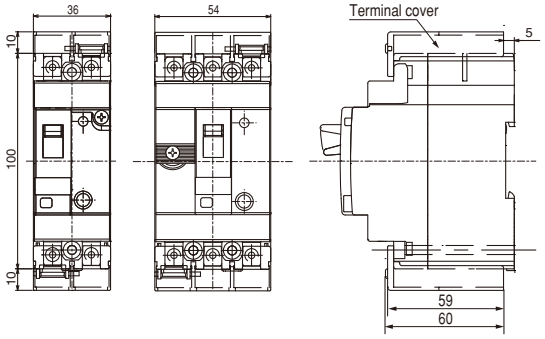

2P 3P

Terminal cover (long)

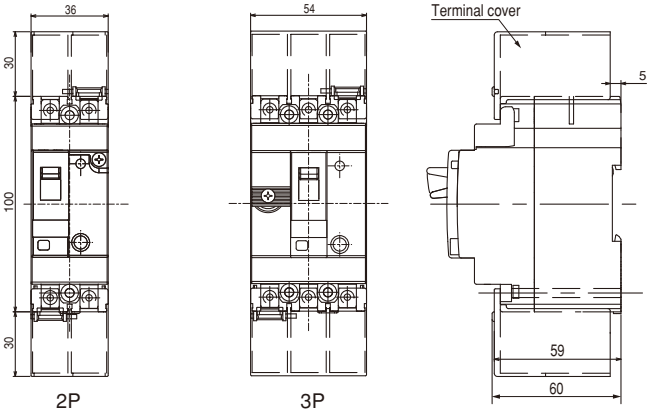

2P 3P

(Note *1) The terminal block is mounted on the accessory mounting side. For the accessory mounting positions, see the List of internal accessory combinations on pages B1-195 to B1-198.
(Note *2) Connectable wire: single wire: 1 to 1.6 ø, stranded wire: 0.5 to 2 mm²

Molded Case Circuit Breakers / Earth Leakage Circuit Breakers
G-TWIN Λ (Lambda) Series Data, Characteristics curves, Dimensions

■ EW50RBGU (Global Product)

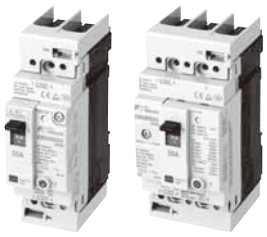

Basic type				EW50RBGU	
Number of poles				2	3
Rated operational voltage AC [V]		IEC		100-240	100-440
Rated operational voltage AC [V]		UL		240	240
Rated sensitive current [mA]				30	30, 50, 100, 200, 500
Maximum operating time [s]				0.1	
Rated breaking capacity	UL489 CAN/CSA C22.2 No.5 [kA]	AC	240V	18	18
	IEC60947-2 EN60947-2 JISC8201-2-2 Icu/Ics [kA]	AC	440V	–/–	7.5/4
			415V	–/–	10/5
			400V	–/–	10/5
			380V	–/–	10/5
			240V	15/15	15/15
			230V	15/15	15/15
			100V	15/15	15/15
	GB14048.2 Icu/Ics [kA]	AC	400V	–/–	10/5
			230V	15/15	15/15

● Attached components

- Terminal cover 2
- Terminal screw 2P: 4 screws, 3P: 6 screws
- Instruction Manual

● Optional accessories

Product name				Type symbol (i.e., symbol code)	See page:
Internal accessories	Auxiliary switch (lead wire type)	Standard	1	W	B1-199
			2	V	B1-199
		Low level circuit	1	1	B1-199
			2	2	B1-199
	Alarm switch (lead wire type)	Standard	1	K	B1-199
		Low level circuit	1	8	B1-199
	Shunt trip device (lead wire type)	24V AC/DC		FR	B1-199
		100-130V AC/100-110V DC		F6	B1-199
		200-240V AC/200-220V DC		FK	B1-199
		380-440V AC		FP	B1-199
	Lead wire terminal block		1	A	B1-213
			2	A	B1-213
	Undervoltage trip device (terminal block type only)	24V DC		RR	B1-199
		100-110V DC		RL	B1-199
		24V AC		RZ	B1-199
		100-130V AC		R6	B1-199
		200-240V AC		R4	B1-199
		380-415V AC		RP	B1-199
		400-440V AC		RO	B1-199

● List of product ratings

Specification for □ : Rated current (code)
Specification for ■ : Rated sensitive current (code)

Product	Basic type	Rated current		Rated sensitive current	
		[A]	Code for □	[mA]	Code for ■
Line protection use (global product)	**EW50SBGU-2P□■**	5	005	30	B
		10	010		
		15	015		
		20	020		
		30	030		
		40	040		
		50	050		
	EW50SBGU-3P□■	5	005	30	B
		10	010	50	D
		15	015	100	C
		20	020	200	E
		30	030	500	H
		40	040		
		50	050		

Molded Case Circuit Breakers / Earth Leakage Circuit Breakers
G-TWIN Λ (Lambda) Series Data, Characteristics curves, Dimensions

● Characteristic Curves

5A

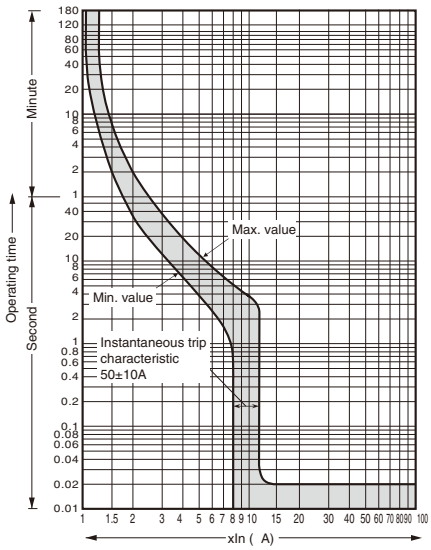

10 to 30A

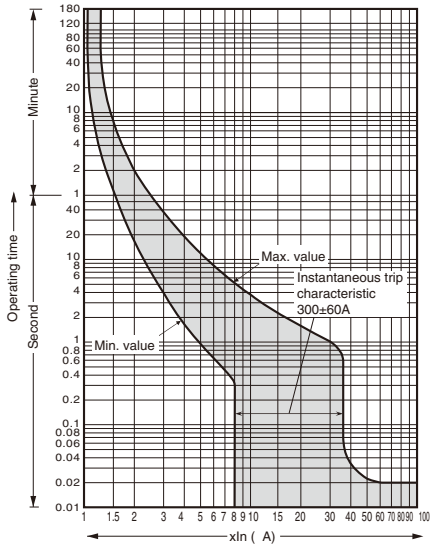

40A, 50A

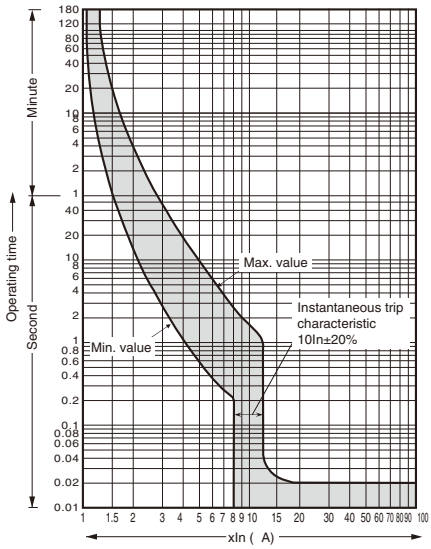

● Temperature correction curve

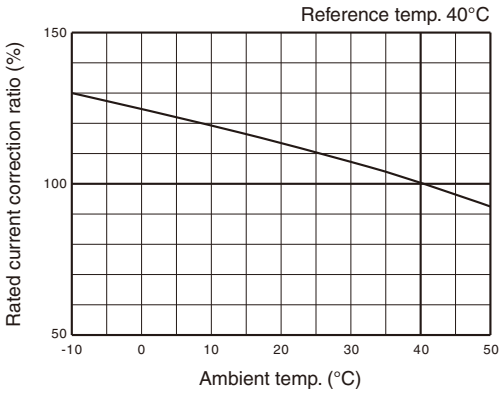

● Earth leakage tripping

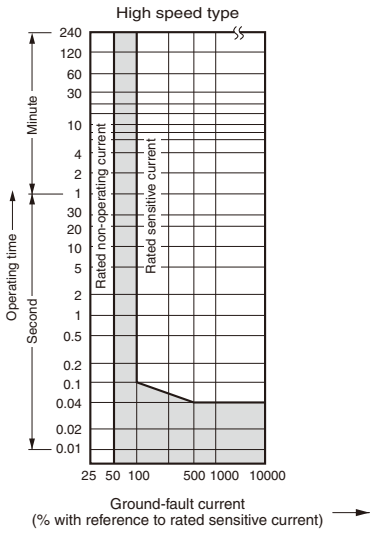

Molded Case Circuit Breakers / Earth Leakage Circuit Breakers
G-TWIN Λ (Lambda) Series Data, Characteristics curves, Dimensions

● Dimensions, mm

Front mounting type

• 2-pole

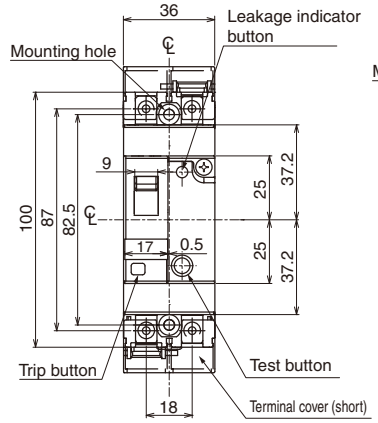

• 3-pole

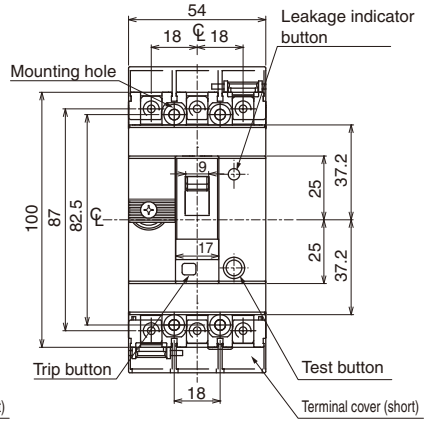

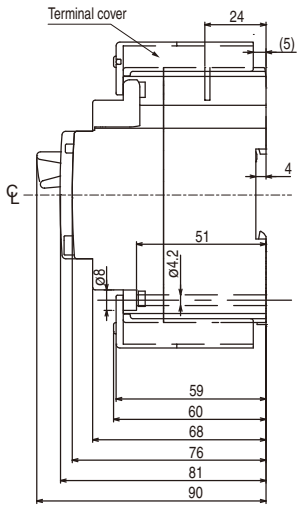

• 2-pole

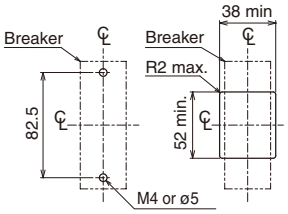

Panel drilling Front panel cutting

• 3-pole

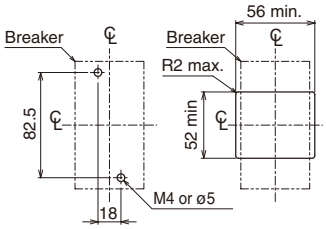

Panel drilling Front panel cutting

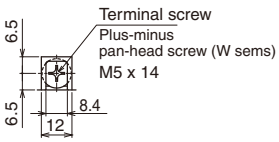

Terminal section detail

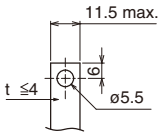

Processing of conductor directly mounted on main unit

Lead wire terminal block *1*2

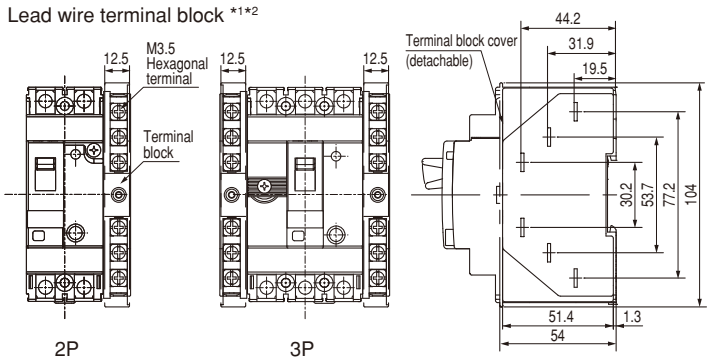

Terminal cover (long)

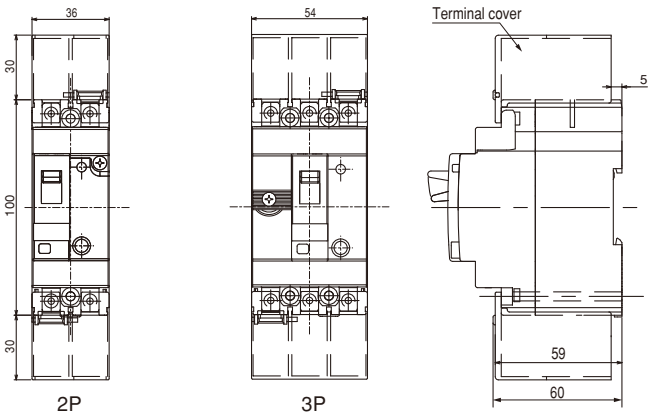

(Note *1) The terminal block is mounted on the accessory mounting side. For the accessory mounting positions, see the List of internal accessory combinations on pages B1-195 to B1-198.
(Note *2) Connectable wire: single wire: 1 to 1.6 ø, stranded wire: 0.5 to 2 mm²

■ External operating handle

● Dimensions, mm

N type handle

BW9N0BA

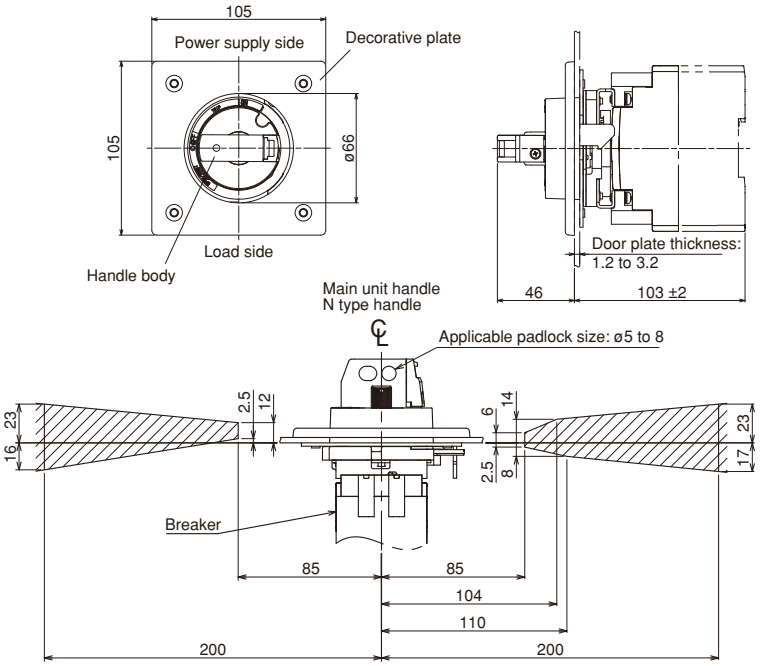

Install the hinge in the shaded area.

Door panel cutout

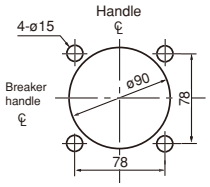

Note: Align the center of the panel cutout with the center of the handle of the breaker main unit.

V type handle

BW9V0BA

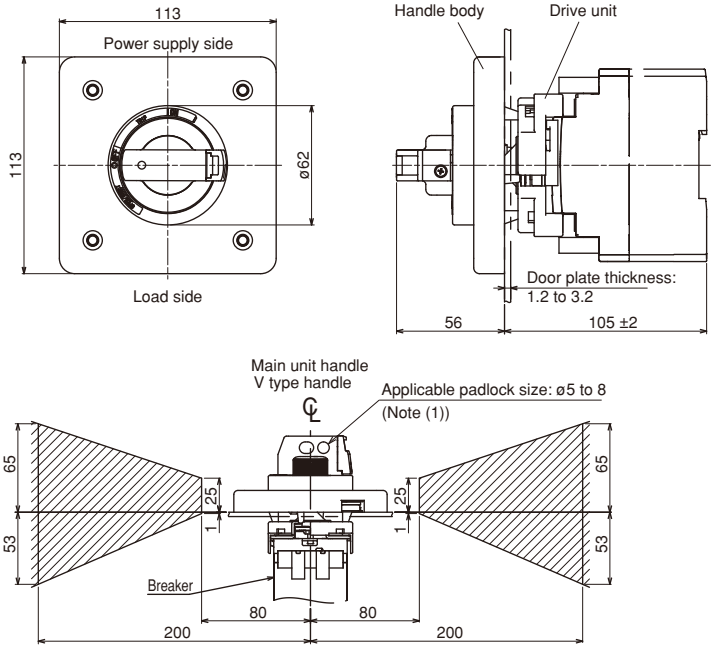

Install the hinge in the shaded area.

Note (1): Padlockable on the drive unit side when the door is open (applicable padlock size: ø5 to 6)

Door panel cutout

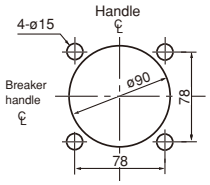

Note: Align the center of the panel cutout with the center of the handle of the breaker main unit.

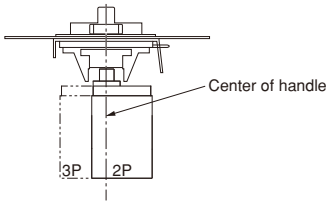

Earth Leakage Protective Relays BRR, RRD and EL series

Earth leakage protective relays

■ Description

In the earth leakage relay the breaking mechanism is omitted from the ELCB, and the ZCT and earth leakage tripping device are integrated into a common body. These relays are available in both instantaneous and time-delay versions.
Generally these relays are used in conjunction with MCCB's, ACB's and motor starters.

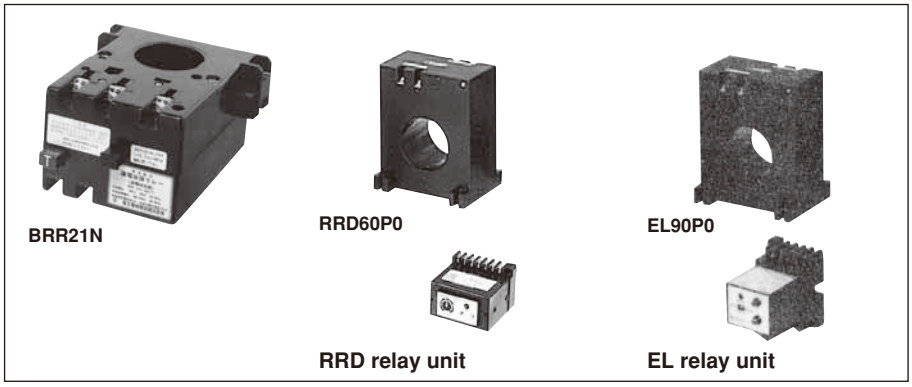

Relay and sensor–Unit type
BRR/Pass-through type
- Instantaneous trip
- Solid-state tripping device
- Sensitive current: 30, 100, 200mA
  500mA
- Control voltage: Up to 415V AC

Relay and sensor–Separate type
RRD/Pass-through type
- Time-delay trip
- Solid-state tripping device
- Sensitive current: 100/200, 200/500mA
  500/1000mA
- Control voltage: Up to 415V AC

EL/Pass-through type
- Instantaneous or time-delay trip
- Solid-state tripping device
- Sensitive current:
  30, 100/200, 200/500mA
  500/1000mA
- Control voltage: Up to 415V AC
- Easily modified from front mounting to flush mounting

■ Selection guide

● BRR(Unit type)/Solid-state tripping device

Type		BRR01N	BRR09N	BRR11N	BRR19N	BRR21N	BRR29N	BRR22N	BRR25N
Sensor hole	(mm)	ø10		ø25		ø40			
Main circuit voltage	(V AC)	Max. 600		120, 240					
Control voltage *	(V AC)	120, 240				120, 240, 415			
Rated sensitive current	(mA)	30	100	30	100	30	100	200	500
Mass	(kg)	0.12		0.2		0.52			

Type		BRR42H	BRR45H
No. of poles		2, 3, 4	
Main circuit voltage	(V AC)	Max. 600	
Rated current	(A)	400	
Control voltage *	(V AC)	120, 240, 415	
Rated sensitive current	(mA)	200	500
Mass	(kg)	2-pole: 3.0, 3-pole: 3.3, 4-pole: 3.6	

● RRD(Separate type)/Solid-state tripping device

Type			RRD6AZ□		RRD8AZ□		RRD10AZ□		RRD12AZ□		RRD25P0	RRD40P0	RRD60P0	RRD90P0	RRD120P0
No. of poles or sensor hole		(mm)	3	4	3	4	3	4	3	4	ø25	ø40	ø60	ø90	ø120
Main circuit voltage		(V AC)	Max. 600								Max. 600				
Rated current		(A)	600		800		1000		1200		–				
Control voltage *		(V AC)	120, 240, 415								120, 240, 415				
Rated sensitive current (mA)	Time-delay type 0.2 to 2 sec. adjustable		100/200, 200/500, 500/1000								100/200, 200/500, 500/1000				
Mass/Relay+Sensor		(kg)	8.1	12.0	9.3	14.6	12.0	16.0	15.7	25.4	0.7	1.2	1.8	2.6	7.0

Note: * 100/110V or 200/220V is available.

Earth Leakage Protective Relays BRR, RRD, and EL types

■ Selection guide

● EL (Separate type)/Solid-state tripping device

Type		EL25P0	EL40P0	EL60P0	EL90P0	EL120P0
Sensor hole (mm)		ø25	ø40	ø60	ø90	ø120
Main circuit voltage (V AC)		Max. 600				
Control voltage (V AC)		100/200, 120/240, 415				
Rated sensitive current (mA)	Instantaneous	30, 100/200, 200/500 500/1000			100/200, 200/500 500/1000	
	Time-delay type	100/200, 200/500, 500/100 (Tripping time: 0.3 or 0.8 sec. fixed)				
Mass/Relay+Sensor (kg)		0.3	0.85	1.45	2.25	6.6

■ Auxiliary contact ratings

Type		Contact arrangement	Thermal current	Making current	Breaking current (cos ø=0.3–0.4) (L/R=7ms) 415V AC	240V AC	120V AC	24V DC
BRR01N, 09N		1NO *	3A	10A (at 240V AC)	–	1A	1A	–
11N, 19N		SPDT	3A		–	1A	1A	–
BRR21N, 29N, 22N, 25N BRR42H, 45H		SPDT	5A	10A (at 240V AC)	2.5A	5A	5A	2A
EL	120/240V AC	SPDT	5A	10A	–	3A	3A	2A
	415V AC	1NO	3A	6A	2A	3A	3A	2A
RRD	120/240V AC	2PDT	5A	10A	–	3A	3A	2A
	415V AC	SPDT	5A	6A	2.5A	3A	3A	2A

Note: * Also available with SPDT contact.

■ Type number nomenclature, BRR unit type

BRR 2 1 N-0 24 S

Protection
S : Without enclosure (standard)

Control voltage (AC)
1 : 100/110V 12 : 120V
2 : 200/220V 24 : 240V
4 : 415V

Poles
N-0 : Pass-through type
H-2 : 2-pole with conductor and terminal assembly
H-3 : 3-pole with conductor and terminal assembly
H-4 : 4-pole with conductor and terminal assembly

Sensitive current
1 : 30mA
9 : 100mA
2 : 200mA
5 : 500mA

Rated current
0 : Pass-through type ø10
1 : Pass-through type ø25
2 : Pass-through type ø40
4 : 400A

Basic type

Fuji Electric FA Components & Systems Co., Ltd. Information subject to change without notice

■ Specifications/BRR type

Series	Rated current *1 (A)	Sensor hole or No. of poles	Rated sensitive current *2 (mA)	Control voltage *3 (V AC)	Tripping time (sec)	Type
BRR	2-wire: 37 3-wire: 37 4-wire: 27	ø10mm	30	120 240	0.1	**BRR01N-012S** **BRR01N-024S**
			100	120 240		**BRR09N-012S** **BRR09N-024S**
	2-wire: 162 3-wire: 115 4-wire: 115	ø25mm	30	120 240		**BRR11N-012S** **BRR11N-024S**
			100	120 240		**BRR19N-012S** **BRR19N-024S**
	2-wire: 344 3:wire: 298 4-wire: 257	ø40mm	30	120 240 415		**BRR21N-012S** **BRR21N-024S** **BRR21N-04S**
			100	120 240 415		**BRR29N-012S** **BRR29N-024S** **BRR29N-04S**
			200	120 240 415		**BRR22N-012S** **BRR22N-024S** **BRR22N-04S**
			500	120 240 415		**BRR25N-012S** **BRR25N-024S** **BRR25N-04S**
	400	2-pole	200	120 240 415	0.1	**BRR42H-212S** **BRR42H-224S** **BRR42H-24S**
			500	120 240 415		**BRR45H-212S** **BRR45H-224S** **BRR45H-24S**
		3-pole	200	120 240 415		**BRR42H-312S** **BRR42H-324S** **BRR42H-34S**
			500	120 240 415		**BRR45H-312S** **BRR45H-324S** **BRR45H-34S**
		4-pole	200	120 240 415		**BRR42H-412S** **BRR42H-424S** **BRR42H-44S**
			500	120 240 415		**BRR45H-412S** **BRR45H-424S** **BRR45H-44S**

Notes: *1 Using IV 600V cable.
*2 Non-tripping current is 0.5 times sensitive current.
*3 100/110V or 200/220V is available.

■ Wire size

ZCT sensing hole diameter and applicable cable(IV 600V)

Diameter (mm)	Wire 2-wire	3-wire	4-wire
10	3.5mm^2	3.5mm^2	2mm^2
25	38mm^2	22mm^2	22mm^2
40	125mm^2	100mm^2	80mm^2
60	325mm^2	200mm^2	200mm^2
90, 120	500mm^2	500mm^2	500mm^2

Conforming to JIS C 3307.

Earth Leakage Protective Relays
RRD series

■ Specifications/RRD type, with conductors

Series	Rated current (A)	No. of poles	Rated sensitive current *1 (mA)	Control voltage *2 (V AC)	Tripping time (sec)	Type
RRD	600	3-pole: 3 4-pole: 4 Replace the□ mark in the type number by the code shown below.	100/200	120 240 415	0.2–2 adjustable	**RRD6AZ□-1/2-V12** **RRD6AZ□-1/2-V24** **RRD6AZ□-1/2-V4**
			200/500	120 240 415		**RRD6AZ□-2/5-V12** **RRD6AZ□-2/5-V24** **RRD6AZ□-2/5-V4**
			500/1000	120 240 415		**RRD6AZ□-5/10-V12** **RRD6AZ□-5/10-V24** **RRD6AZ□-5/10-V4**
	800		100/200	120 240 415		**RRD8AZ□-1/2-V12** **RRD8AZ□-1/2-V24** **RRD8AZ□-1/2-V4**
			200/500	120 240 415		**RRD8AZ□-2/5-V12** **RRD8AZ□-2/5-V24** **RRD8AZ□-2/5-V4**
			500/1000	120 240 415		**RRD8AZ□-5/10-V12** **RRD8AZ□-5/10-V24** **RRD8AZ□-5/10-V4**
	1000		100/200	120 240 415		**RRD10AZ□-1/2-V12** **RRD10AZ□-1/2-V24** **RRD10AZ□-1/2-V4**
			200/500	120 240 415		**RRD10AZ□-2/5-V12** **RRD10AZ□-2/5-V24** **RRD10AZ□-2/5-V4**
			500/1000	120 240 415		**RRD10AZ□-5/10-V12** **RRD10AZ□-5/10-V24** **RRD10AZ□-5/10-V4**
	1200		100/200	120 240 415		**RRD12AZ□-1/2-V12** **RRD12AZ□-1/2-V24** **RRD12AZ□-1/2-V4**
			200/500	120 240 415		**RRD12AZ□-2/5-V12** **RRD12AZ□-2/5-V24** **RRD12AZ□-2/5-V4**
			500/1000	120 240 415		**RRD12AZ□-5/10-V12** **RRD12AZ□-5/10-V24** **RRD12AZ□-5/10-V4**

Notes: *1 The rated sensitive current can be selected by jumper connection.
Non-tripping current 0.5 times sensitive current.

*2 100/110V or 200/220V is available.

■ Type number nomenclature, RRD type

RRD 40 P0 - 2/5 -V2

Control voltage (AC)
V1 : 100/110V V4 : 415V V24 : 240V
V2 : 200/220V V12 : 120V

Sensitive current (selective)
1/2 : 100/200mA
2/5 : 200/500mA 5/10 : 500/1000mA

Poles
P0 : Pass-through type
Z3 : 3-pole with conductor
Z4 : 4-pole with conductor

Dia. of sensor hole or rated current
25 : ø25 6A : 600A
40 : ø40 8A : 800A
60 : ø60 10A : 1000A
90 : ø90 12A : 1200A
120 : ø120

Basic type

Fuji Electric FA Components & Systems Co., Ltd. Information subject to change without notice

■ Specifications/RRD, poss-through type

Series	Rated current *1 (A)	Sensor hole (mm)	Rated sensitive current *2 (mA)	Control voltage *3 (V AC)	Tripping time (sec)	Type
RRD	2-wire: 162 3-wire: 115 4-wire: 115	ø25	100/200	120 240 415	0.2–2 adjustable	**RRD25P0-1/2-V12** **RRD25P0-1/2-V24** **RRD25P0-1/2-V4**
			200/500	120 240 415		**RRD25P0-2/5-V12** **RRD25P0-2/5-V24** **RRD25P0-2/5-V4**
			500/1000	120 240 415		**RRD25P0-5/10-V12** **RRD25P0-5/10-V24** **RRD25P0-5/10-V4**
	2-wire: 344 3-wire: 298 4-wire: 257	ø40	100/200	120 240 415		**RRD40P0-1/2-V12** **RRD40P0-1/2-V24** **RRD40P0-1/2-V4**
			200/500	120 240 415		**RRD40P0-2/5-V12** **RRD40P0-2/5-V24** **RRD40P0-2/5-V4**
			500/1000	120 240 415		**RRD40P0-5/10-V12** **RRD40P0-5/10-V24** **RRD40P0-5/10-V4**
	2-wire: 650 3-wire: 469 4-wire: 469	ø60	100/200	120 240 415		**RRD60P0-1/2-V12** **RRD60P0-1/2-V24** **RRD60P0-1/2-V4**
			200/500	120 240 415		**RRD60P0-2/5-V12** **RRD60P0-2/5-V24** **RRD60P0-2/5-V4**
			500/1000	120 240 415		**RRD60P0-5/10-V12** **RRD60P0-5/10-V24** **RRD60P0-5/10-V4**
	2-wire: 842 3-wire: 842 4-wire: 842	ø90	100/200	120 240 415		**RRD90P0-1/2-V12** **RRD90P0-1/2-V24** **RRD90P0-1/2-V4**
			200/500	120 240 415		**RRD90P0-2/5-V12** **RRD90P0-2/5-V24** **RRD90P0-2/5-V4**
			500/1000	120 240 415		**RRD90P0-5/10-V12** **RRD90P0-5/10-V24** **RRD90P0-5/10-V4**
	2-wire: 842 3-wire: 842 4-wire: 842	ø120	100/200	120 240 415		**RRD120P0-1/2-V12** **RRD120P0-1/2-V24** **RRD120P0-1/2-V4**
			200/500	120 240 415		**RRD120P0-2/5-V12** **RRD120P0-2/5-V24** **RRD120P0-2/5-V4**
			500/1000	120 240 415		**RRD120P0-5/10-V12** **RRD120P0-5/10-V24** **RRD120P0-5/10-V4**

Notes: *1 Using IV 600V cable. *(See page B1-217 for reference.)*
*2 The rated sensitive current can be selected by jumper connection.
Non-tripping current 0.5 times sensitive current.
*3 100/110V or 200/220V is available.

Earth Leakage Protective Relays
EL types

■ Specifications/EL type

Series	Rated current *1 (A)	Sensor hole (mm)	Rated sensitive current *2 (mA)	Control voltage *3 (V AC)	Tripping time (sec)	120/240V Type	415V Type
EL Instantaneous	2-wire: 162 3-wire: 115 4-wire: 115	ø25	30 100/200 200/500 500/1000	120/240 415	0.1	**EL25P0-30MA-V12** **EL25P0-1/2-V12** **EL25P0-2/5-V12** **EL25P0-5/10-V12**	**EL25P0-30MA-V4** **EL25P0-1/2-V4** **EL25P0-2/5-V4** **EL25P0-5/10-V4**
	2-wire: 344 3-wire: 298 4-wire: 257	ø40	30 100/200 200/500 500/1000			**EL40P0-30MA-V12** **EL40P0-1/2-V12** **EL40P0-2/5-V12** **EL40P0-5/10-V12**	**EL40P0-30MA-V4** **EL40P0-1/2-V4** **EL40P0-2/5-V4** **EL40P0-5/10-V4**
	2-wire: 650 3-wire: 469 4-wire: 469	ø60	30 100/200 200/500 500/1000			**EL60P0-30MA-V12** **EL60P0-1/2-V12** **EL60P0-2/5-V12** **EL60P0-5/10-V12**	**EL60P0-30MA-V4** **EL60P0-1/2-V4** **EL60P0-2/5-V4** **EL60P0-5/10-V4**
	2-wire: 842 3-wire: 842 4-wire: 842	ø90	100/200 200/500 500/1000			**EL90P0-1/2-V12** **EL90P0-2/5-V12** **EL90P0-5/10-V12**	**EL90P0-1/2-V4** **EL90P0-2/5-V4** **EL90P0-5/10-V4**
	2-wire: 842 3-wire: 842 4-wire: 842	ø120	100/200 200/500 500/1000			**EL120P0-1/2-V12** **EL120P0-2/5-V12** **EL120P0-5/10-V12**	**EL120P0-1/2-V4** **EL120P0-2/5-V4** **EL120P0-5/10-V4**
EL Time delay	2-wire: 162 3-wire: 115 4-wire: 115	ø25	100/200 200/500 500/1000	120/240 415	0.3	**EL25P0-1/2-D3-V12** **EL25P0-2/5-D3-V12** **EL25P0-5/10-D3-V12**	**EL25P0-1/2-D3-V4** **EL25P0-2/5-D3-V4** **EL25P0-5/10-D3-V4**
	2-wire: 344 3-wire: 298 4-wire: 257	ø40	100/200 200/500 500/1000			**EL40P0-1/2-D3-V12** **EL40P0-2/5-D3-V12** **EL40P0-5/10-D3-V12**	**EL40P0-1/2-D3-V4** **EL40P0-2/5-D3-V4** **EL40P0-5/10-D3-V4**
	2-wire: 650 3-wire: 469 4-wire: 469	ø60	100/200 200/500 500/1000			**EL60P0-1/2-D3-V12** **EL60P0-2/5-D3-V12** **EL60P0-5/10-D3-V12**	**EL60P0-1/2-D3-V4** **EL60P0-2/5-D3-V4** **EL60P0-5/10-D3-V4**
	2-wire: 842 3-wire: 842 4-wire: 842	ø90	100/200 200/500 500/1000			**EL90P0-1/2-D3-V12** **EL90P0-2/5-D3-V12** **EL90P0-5/10-D3-V12**	**EL90P0-1/2-D3-V4** **EL90P0-2/5-D3-V4** **EL90P0-5/10-D3-V4**
	2-wire: 842 3-wire: 842 4-wire: 842	ø120	100/200 200/500 500/1000			**EL120P0-1/2-D3-V12** **EL120P0-2/5-D3-V12** **EL120P0-5/10-D3-V12**	**EL120P0-1/2-D3-V4** **EL120P0-2/5-D3-V4** **EL120P0-5/10-D3-V4**
	2-wire: 162 3-wire: 115 4-wire: 115	ø25	100/200 200/500 500/1000	120/240 415	0.8	**EL25P0-1/2-D8-V12** **EL25P0-2/5-D8-V12** **EL25P0-5/10-D8-V12**	**EL25P0-1/2-D8-V4** **EL25P0-2/5-D8-V4** **EL25P0-5/10-D8-V4**
	2-wire: 344 3-wire: 298 4-wire: 257	ø40	100/200 200/500 500/1000			**EL40P0-1/2-D8-V12** **EL40P0-2/5-D8-V12** **EL40P0-5/10-D8-V12**	**EL40P0-1/2-D8-V4** **EL40P0-2/5-D8-V4** **EL40P0-5/10-D8-V4**
	2-wire: 650 3-wire: 469 4-wire: 469	ø60	100/200 200/500 500/1000			**EL60P0-1/2-D8-V12** **EL60P0-2/5-D8-V12** **EL60P0-5/10-D8-V12**	**EL60P0-1/2-D8-V4** **EL60P0-2/5-D8-V4** **EL60P0-5/10-D8-V4**
	2-wire: 842 3-wire: 842 4-wire: 842	ø90	100/200 200/500 500/1000			**EL90P0-1/2-D8-V12** **EL90P0-2/5-D8-V12** **EL90P0-5/10-D8-V12**	**EL90P0-1/2-D8-V4** **EL90P0-2/5-D8-V4** **EL90P0-5/10-D8-V4**
	2-wire: 842 3-wire: 842 4-wire: 842	ø120	100/200 200/500 500/1000			**EL120P0-1/2-D8-V12** **EL120P0-2/5-D8-V12** **EL120P0-5/10-D8-V12**	**EL120P0-1/2-D8-V4** **EL120P0-2/5-D8-V12** **EL120P0-5/10-D8-V4**

Notes: *1 Using IV 600V cable. *(See page B1-217 for reference.)*
*2 Non tripping current is 0.5 times sensitive current.
*3 100/110V or 200/220V is available.

● Type number nomenclature, ELtype

EL 25 P0 - 1/2 - D3-V4

Basic type — EL

Diameter of sensor hole (mm) — 25
25 : ø25 60 : ø60 120 : ø120
40 : ø40 90 : ø90

Pass-through type — P0

Sensitive current — 1/2
30MA : 30mA
1/2 : 100/200mA (selective)
2/5 : 200/500mA (selective)
5/10 : 500/1000mA (selective)

Tripping time — D3
Blank : Instantaneous
D3 : 0.3 sec. time delay
D8 : 0.8 sec. time delay

Control voltage (AC) — V4
No-mark : 100/200V V12 : 120/240V
V4 : 415V

Fuji Electric FA Components & Systems Co., Ltd. Information subject to change without notice

■ Specifications/EL type, UL 1053 recognized [UL File No. E176596]

Series	Sensor hole (mm)	Rated sensitive current (mA)	Control voltage	Tripping time (sec)	Type		
					24 VAC/DC Control	100/200 VAC Control	120/240 VAC Control
EL	ø25	30	24 VAC/DC 100/200 VAC 120/240 VAC	0.1	**EL25P0-30MA-AD24-00415UL**	**EL25P0-30MA-00415UL**	**EL25P0-30MA-V12-00415UL**
		50/100			**EL25P0-05/1-AD24-00415UL**	**EL25P0-05/1-00415UL**	**EL25P0-05/1-V12-00415UL**
		100/200			**EL25P0-1/2-AD24-00415UL**	**EL25P0-1/2-00415UL**	**EL25P0-1/2-V12-00415UL**
		200/500			**EL25P0-2/5-AD24-00415UL**	**EL25P0-2/5-00415UL**	**EL25P0-2/5-V12-00415UL**
		500/1000			**EL25P0-5/10-AD24-00415UL**	**EL25P0-5/10-00415UL**	**EL25P0-5/10-V12-00415UL**
	ø40	30			**EL40P0-30MA-AD24-00415UL**	**EL40P0-30MA-00415UL**	**EL40P0-30MA-V12-00415UL**
		50/100			**EL40P0-05/1-AD24-00415UL**	**EL40P0-05/1-00415UL**	**EL40P0-05/1-V12-00415UL**
		100/200			**EL40P0-1/2-AD24-00415UL**	**EL40P0-1/2-00415UL**	**EL40P0-1/2-V12-00415UL**
		200/500			**EL40P0-2/5-AD24-00415UL**	**EL40P0-2/5-00415UL**	**EL40P0-2/5-V12-00415UL**
		500/1000			**EL40P0-5/10-AD24-00415UL**	**EL40P0-5/10-00415UL**	**EL40P0-5/10-V12-00415UL**
	ø60	30			**EL60P0-30MA-AD24-00415UL**	**EL60P0-30MA-00415UL**	**EL60P0-30MA-V12-00415UL**
		50/100			**EL60P0-05/1-AD24-00415UL**	**EL60P0-05/1-00415UL**	**EL60P0-05/1-V12-00415UL**
		100/200			**EL60P0-1/2-AD24-00415UL**	**EL60P0-1/2-00415UL**	**EL60P0-1/2-V12-00415UL**
		200/500			**EL60P0-2/5-AD24-00415UL**	**EL60P0-2/5-00415UL**	**EL60P0-2/5-V12-00415UL**
		500/1000			**EL60P0-5/10-AD24-00415UL**	**EL60P0-5/10-00415UL**	**EL60P0-5/10-V12-00415UL**
	ø90	30			**EL90P0-30MA-AD24-00415UL**	**EL90P0-30MA-00415UL**	**EL90P0-30MA-V12-00415UL**
		50/100			**EL90P0-05/1-AD24-00415UL**	**EL90P0-05/1-00415UL**	**EL90P0-05/1-V12-00415UL**
		100/200			**EL90P0-1/2-AD24-00415UL**	**EL90P0-1/2-00415UL**	**EL90P0-1/2-V12-00415UL**
		200/500			**EL90P0-2/5-AD24-00415UL**	**EL90P0-2/5-00415UL**	**EL90P0-2/5-V12-00415UL**
		500/1000			**EL90P0-5/10-AD24-00415UL**	**EL90P0-5/10-00415UL**	**EL90P0-5/10-V12-00415UL**
	ø115	30			**EL115P0-30MA-AD24-00415UL**	**EL115P0-30MA-00415UL**	**EL115P0-30MA-V12-00415UL**
		50/100			**EL115P0-05/1-AD24-00415UL**	**EL115P0-05/1-00415UL**	**EL115P0-05/1-V12-00415UL**
		100/200			**EL115P0-1/2-AD24-00415UL**	**EL115P0-1/2-00415UL**	**EL115P0-1/2-V12-00415UL**
		200/500			**EL115P0-2/5-AD24-00415UL**	**EL115P0-2/5-00415UL**	**EL115P0-2/5-V12-00415UL**
		500/1000			**EL115P0-5/10-AD24-00415UL**	**EL115P0-5/10-00415UL**	**EL115P0-5/10-V12-00415UL**

● Type number nomenclature, EL type, UL 1053 recognized

EL 25 P0 - 30MA - AD24 - 00415 UL

Special ratings in clause IV
00415 UL : UL agreement goods

Control voltage
No mark : 100/200V AC
V12 : 120/240V AC
AD24 : 24V AC/DC

Sensitivity current
30MA : 30mA (Pick-up current 22mA)
05/1 : 50/100mA (Pick-up current 40/80mA)
1/2 : 100/200mA (Pick-up current 80/160mA)
2/5 : 200/500mA (Pick-up current 160/400mA)
5/10 : 500/1000mA (Pick-up current 400/800mA)

Pass-through type
P0 : through type

Diameter of sensor hole
25 : 25mm diameter
40 : 40mm diameter
60 : 60mm diameter
90 : 90mm diameter
115 : 115mm diameter

Basic type

Earth Leakage Protective Relays
BRR type

■ Dimensions, mm

BRR01N, 09N

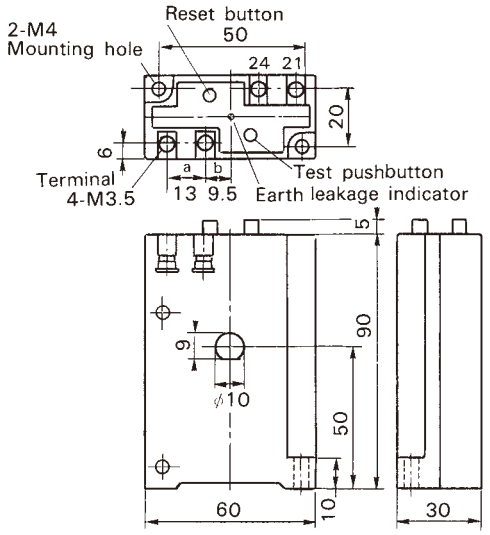

BRR11N, 19N

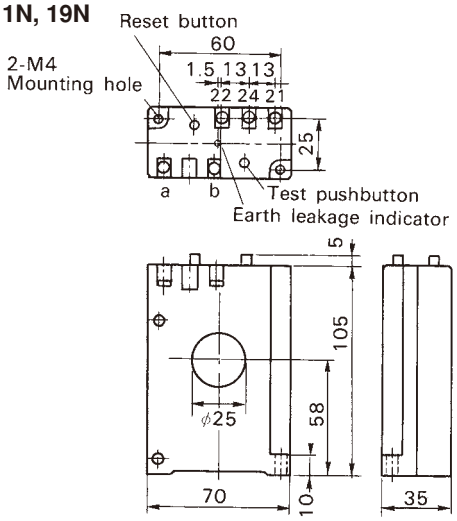

BRR21N, 29N, 22N, 23N, 25N

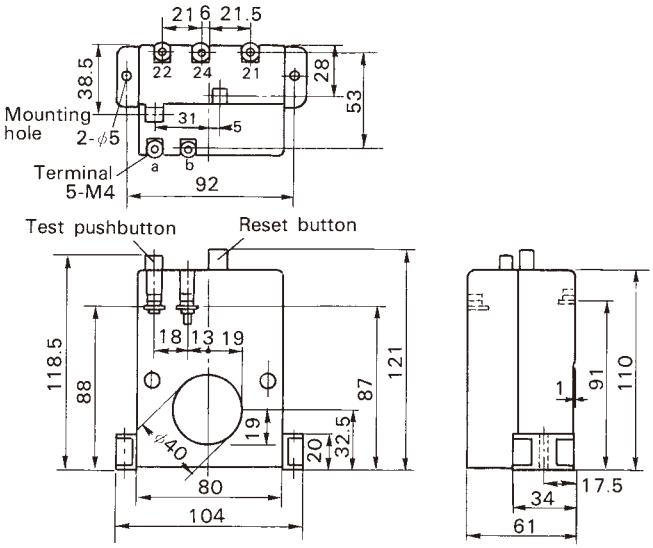

BRR42H, 45H
2-pole

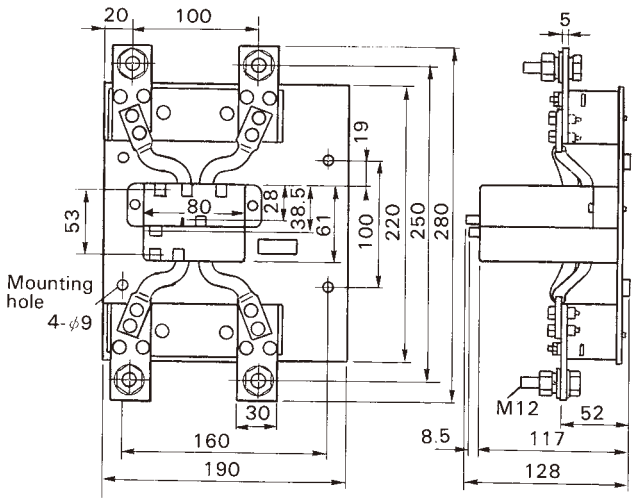

3-pole

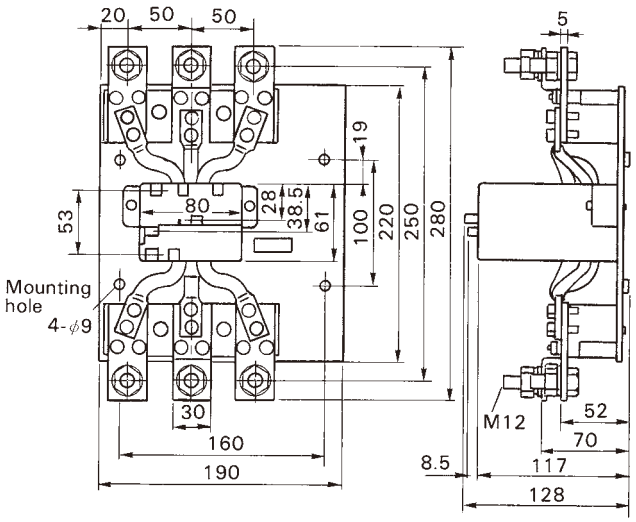

4-pole

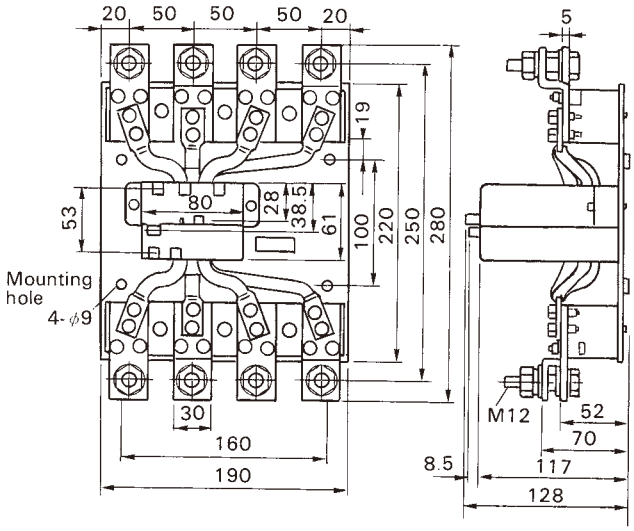

Fuji Electric FA Components & Systems Co., Ltd.
Information subject to change without notice

■ Dimensions, mm

Relay RRD type

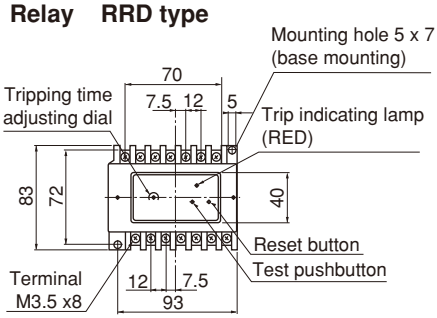

Panel mounting

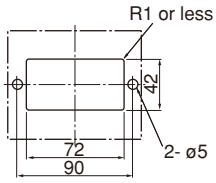

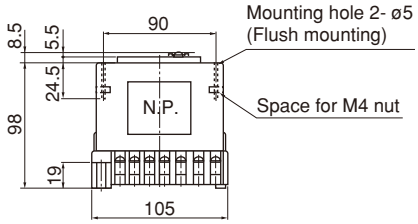

Base mounting

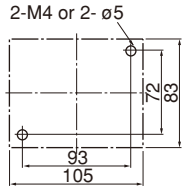

Relay EL type

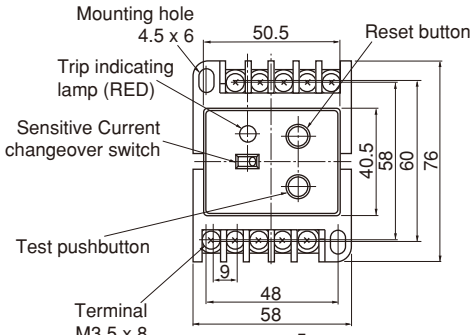

Panel mounting

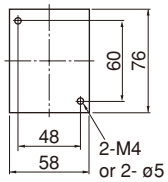

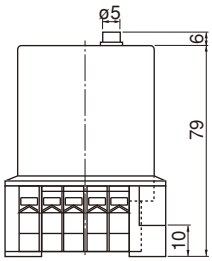

Panel cutting

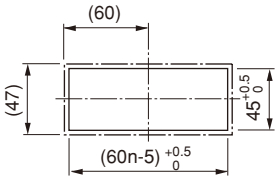

n: No. of mounting unit
( ) : Flush mounting

Note: When flush mounting type is required, an adaptor EL-E is needed. (Sold separately)

Sensors
RRD25, 40, 60, 90P0
EL25, 40, 60, 90P0

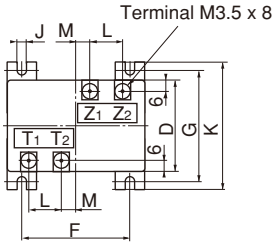

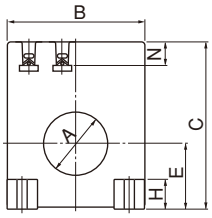

RRD120, EL120P0

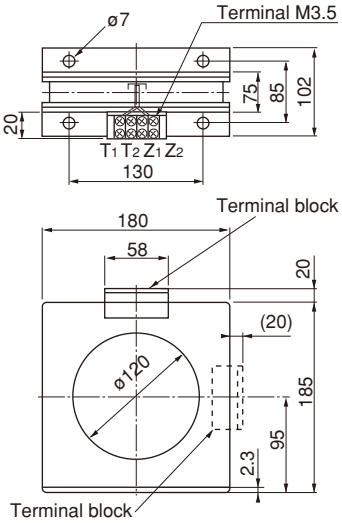

Type	A	B	C	D	E	F	G	H	J	K	L	M	N
RRD25	ø25	55	72	29	28	40	42	10	5	54	13	7	7
EL25	ø25	55	72	29	28	40	42	10	5	54	13	7	7
RRD40	ø40	90	115	62	45	70	75	18	5	90	22	8	18
EL40	ø40	90	115	62	45	70	75	18	5	90	22	8	18
RRD60	ø60	120	145	62	60	100	75	18	6	90	22	8	18
EL60	ø60	120	145	62	60	100	75	18	6	90	22	8	18
RRD90	ø90	160	185	66	80	125	88	22	7	110	22	8	18
EL90	ø90	160	185	66	80	125	88	22	7	110	22	8	18

Earth Leakage Protective Relays
RRD and EL types

■ Dimensions, mm

Sensors

RRD6AZ3, 8AZ3, 10AZ3

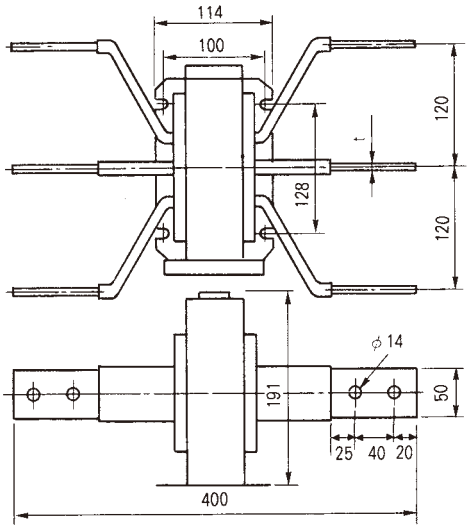

t RRD6AZ3: 6
RRD8AZ3: 8
RRD10AZ3: 12

RRD6AZ4, 8AZ4, 10AZ4

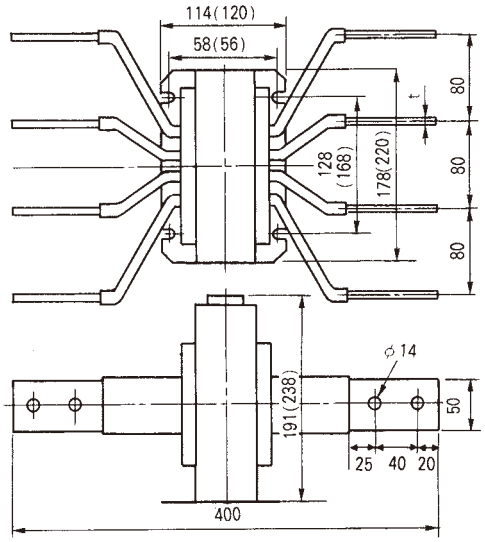

t RRD6AZ4: 6
RRD8AZ4: 8
RRD10AZ4: 12

( ) : For RRD10AZ4

RRD12AZ3

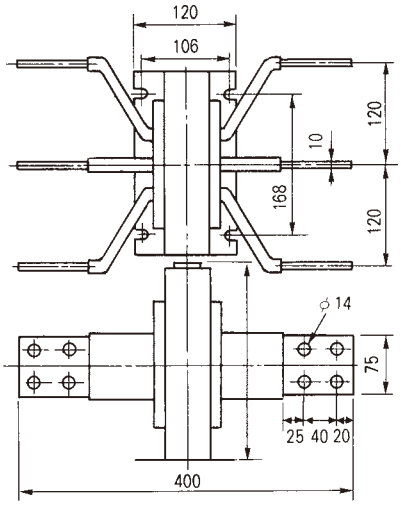

RRD12AZ4

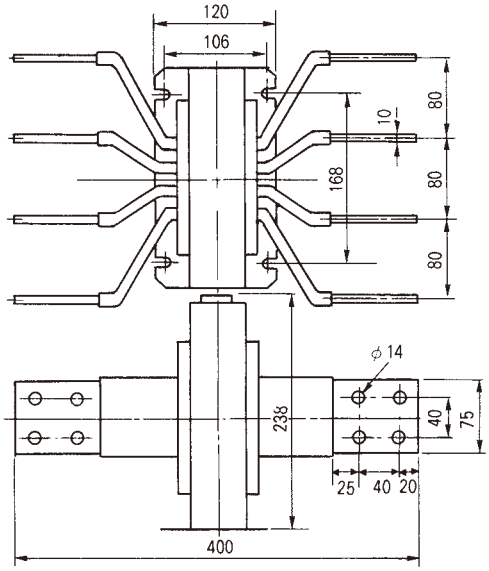

Fuji Electric FA Components & Systems Co., Ltd.
Information subject to change without notice

■ Wiring diagrams

BRR01N, 09N

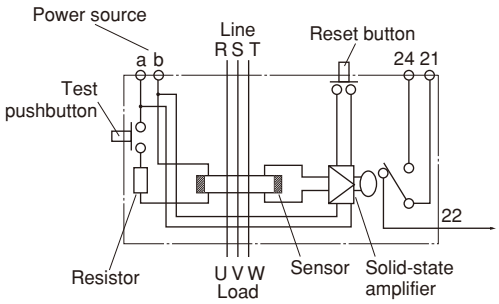

BRR11N, 19N, 21N, 29N, 22N, 23N, 25N
BRR42H, 45H

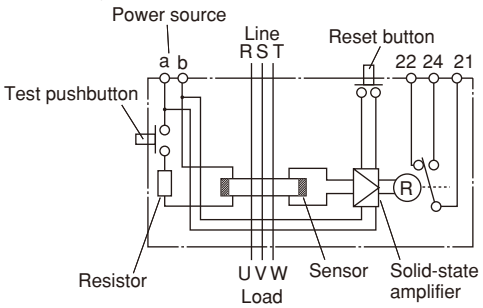

RRD type

● **415VAC**

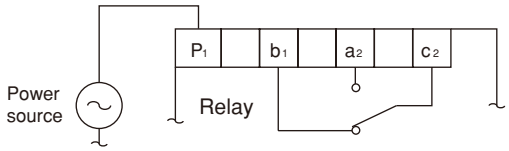

● **100/110VAC, 200/220VAC, 120VAC, 240VAC**

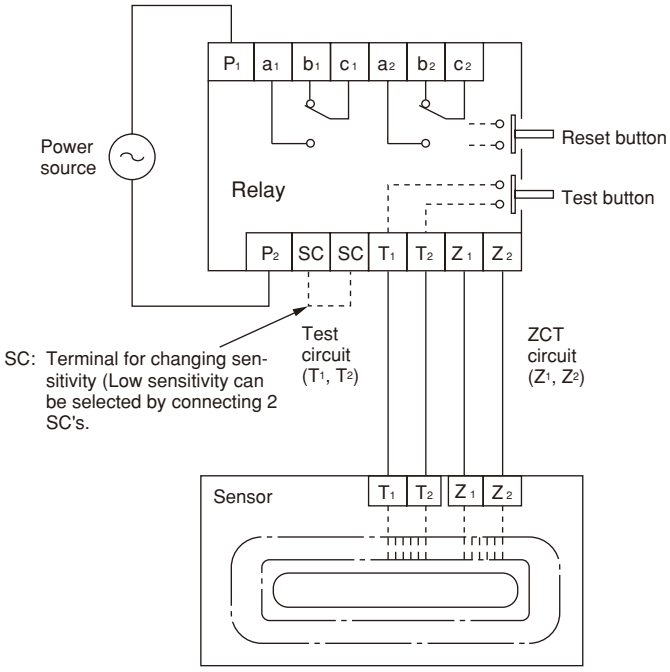

EL type

100/200VAC, 120/240VAC

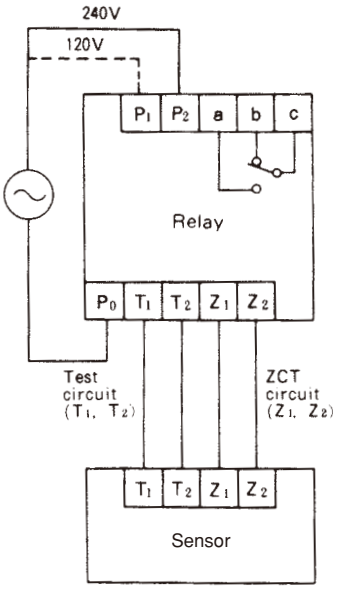

415VAC

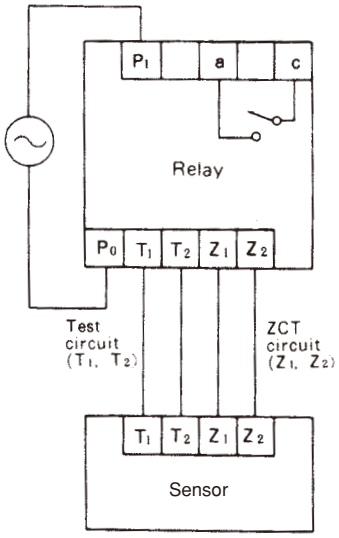

Circuit protectors
Low voltage fuses

		Page
Circuit Protectors	CP30F	B2-1
	CP31, 31D, 32D	B2-7
	CP31P, 32P, 33P	B2-10
	CP51B, 52B, 53B	B2-16
	CP31E, 32E, 33E, 34E, CP31V, 32V, 33V, 34V	B2-21
Low Voltage Fuses	General information	B2-27
	Current-limiting fuses	
	AFaC, BaC	B2-28
	FCF, FCK	B2-31
	Super rapid fuses	
	BLC, CR, CS	B2-33

MINIMUM ORDERS

Orders amounting to **less than ¥10,000** net per order will be charged as ¥10,000 net per order plus freight and other charges.

WEIGHTS AND DIMENSIONS

Weights and dimensions appearing in this catalog are the best information available at the time of going to press. FUJI ELECTRIC FA has a policy of continuous product improvement, and design changes may make this information out of date.
Please confirm such details before planning actual construction.

INFORMATION IN THIS CATALOG IS SUBJECT TO CHANGE WITHOUT NOTICE.

CP30F circuit protectors

■ Description

Full Model Change for CP-F Series model circuit protector in conformity with Japanese and major overseas standards.
No terminal cover required - Finger protection (IP20 equivalent) design.

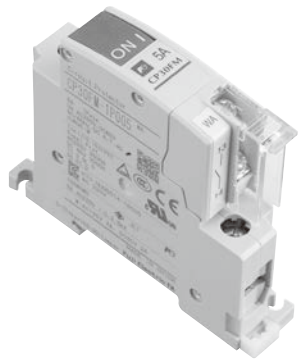

CP30F

KKD16-095

■ Features

- Ultra-slim 17.5 mm per pole width
- Multi standard
  - UL1077
  - CSA C22.2 No.235
  - EN60934/IEC60934
  - GB17701
  - KC60934
- AC/DC compatible (1P and 2P)
- Screw lift-up terminals offer finger protection (IP20 equivalent) structure without terminal cover
- Revised terminal arrangement of auxiliary circuit improves ease of wiring
- Auxiliary/alarm switch (1NO or 1NC) can be integrated (1P: 1 switch, 2P, 3P: 2 switches), standard types provided with terminal cover for auxiliary circuit

■ Specifications

Type		CP30F□-1P	CP30F□-2P	CP30F□-3P
No. of poles		1	2	3
Rated insulation voltage (V)		250 V AC (50/60 Hz) 65 V DC compatible	250 V AC (50/60 Hz) 125 V DC compatible	250 V AC (50/60 Hz) AC only
Rated current (A)		0.1, 0.3, 0.5, 1, 2, 3, 5, 7, 10, 15, 20, 25, 30		
Rated breaking capacity	250 V AC	2,500 A	2,500 A	2,500 A
	125 V DC	–	2,500 A	–
	65 V DC	2,500 A	–	–
Operating characteristic (AC/DC compatible)		Long time delay (S), medium time delay (M) and instantaneous (I) types		
Tripping mechanism		Hydraulic magnetic type		
Reference temperature		+40°C		
Operational ambient temperature		-10 to +60°C (storage: -40 to +60°C)		
Make/break durability		10,000 operations min. (rated current supplied)		
Terminal	Main circuit	M5 screw (over 20 A)/M4 screw (up to 20 A): screw lift-up		
	Auxiliary circuit	M3.5 screw: self-lifting		
Mounting method	Front mounting type	M4 screw/IEC35 mm rail compatible		
Accessories (optional)	Auxiliary switch	Can be integrated: 1NO or 1NC contact (low-level circuit type acceptable)		
	Alarm switch	Can be integrated: 1NO or 1NC contact (low-level circuit type acceptable)		
	Delay device	Can be integrated: (long time delay and medium time delay) AC only		
Dimensions (W x L x H)		17.5 x 73 x 66.3	35 x 73 x 66.3	52.5 x 73 x 66.3
Standard conformity and certification				

Circuit Protectors
CP30F

■ Type number nomenclature

CP 30 F M - 1P 005 WA D

Basic type

Code	Product classification
CP	Circuit protector

Frame

Code	Description
30	30AF

Breaking capacity classification

Code	Breaking capacity
F	2.5 kA

Operating characteristic

Code	Description
S	Long time delay
M	Medium time delay
I	Instantaneous

No. of poles

Code	Description
1P	1-pole
2P	2-pole
3P	3-pole

Rated current
Example: 0.1A: 0P1 5A: 005 10A: 010

Delay device

Code	Description
Blank	Without delay device
D	With delay device

Accessories

Description		Contact arrangement		Code
		Auxiliary switch	Alarm switch	
Without auxiliary or alarm switch		-	-	
Standard load	Auxiliary switch x1	1NO	-	**WA**
		1NC	-	**WB**
	Alarm switch x1	-	1NO	**KA**
		-	1NC	**KB**
	Auxiliary switch x2	2NO	-	**VAVA**
		2NC	-	**VBVB**
		1NO1NC	-	**VAVB**
	Auxiliary switch x1 Alarm switch x1	1NO	1NO	**WAKA**
		1NO	1NC	**WAKB**
		1NC	1NO	**WBKA**
		1NC	1NC	**WBKB**
Low level circuit	Auxiliary switch x1	1NO	-	**W1A**
		1NC	-	**W1B**
	Alarm switch x1	-	1NO	**K1A**
		-	1NC	**K1B**
	Auxiliary switch x2	2NO	-	**V1AV1A**
		2NC	-	**V1BV1B**
		1NO1NC	-	**V1AV1B**
	Auxiliary switch x1 Alarm switch x1	1NO	1NO	**W1AK1A**
		1NO	1NC	**W1AK1B**
		1NC	1NO	**W1BK1A**
		1NC	1NC	**W1BK1B**

■ Combination

			Series	Operating characteristic				No. of poles			Rated current	Accessory									Delay device		Applied circuit
		C P 30	F	S	M	I	—	1P	2P	3P	□	※1	W	K	W1	K1	WW	W1W1	WK	W1K1	*2	D	AC/DC compatible
	C																						
	P																						
	3							○	○	○													
No. of poles	1			○	○	○			—	—	○	○	○	○	○	○	×	×	×	×	○	○	○
	2			○	○	○				—	○	○	○	○	○	○	○	○	○	○	○	○	○
	3			○	○	○					○	○	○	○	○	○	○	○	○	○	○	○	AC only
Series	F																						
Operating characteristic	S				—	—					○	○	○	○	○	○	○	○	○	○	○	○ *3	○
	M					—					○	○	○	○	○	○	○	○	○	○	○	△ *3	○
	I										○	○	○	○	○	○	○	○	○	○	○	×	○

*1 : Not designated (no auxiliary or alarm switch)
*2 : Not designated (no delay device)
*3 : Only AC dedicated products are equipped with a delay device.

○ : Standard (manufacturable)
△ : Non-standard (Manufacturable only when specified at time of order.)
× : Not manufacturable

Information subject to change without notice

■ Operating characteristic curves

●Long time delay (S) AC 50/60 Hz / DC compatible

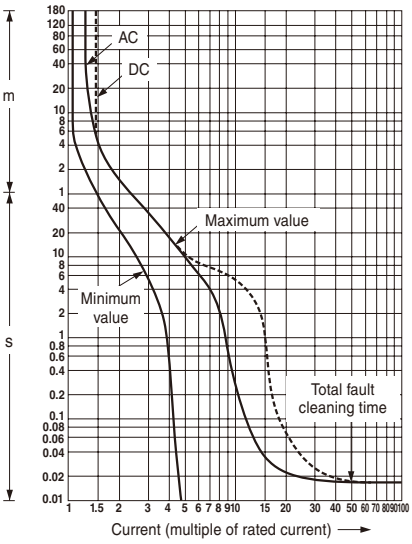

●Medium time delay (M) AC 50/60 Hz / DC compatible

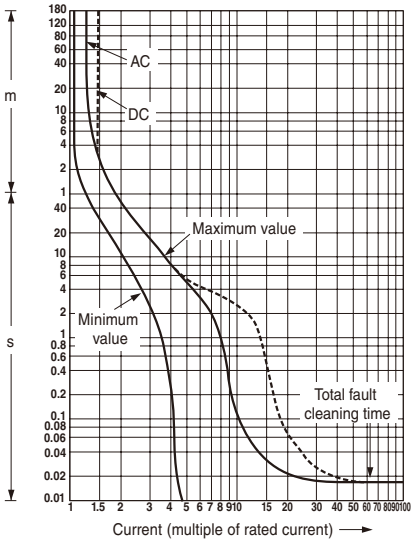

●Instantaneous (I) AC 50/60 Hz / DC compatible

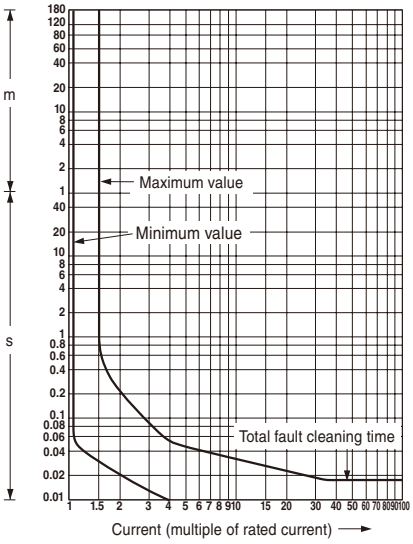

●Long-time delay tripping device equipped (S/D) AC dedicated

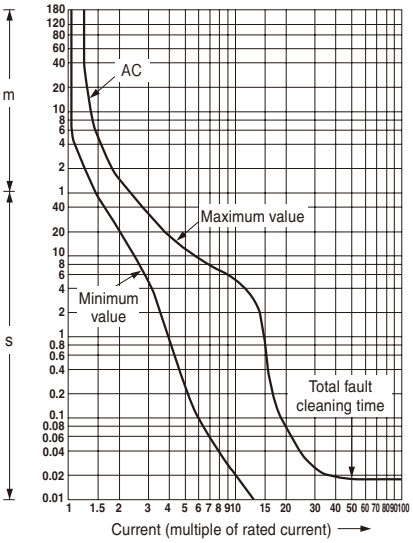

● **Ambient temperature correction curve**

The standard ambient temperature of the operating time shall be 40°C. The operating time at other temperatures is the value corrected based on the ambient temperature correction curve. The operating time of the instantaneous type is not influenced by the ambient temperature. The instantaneous type generates a gentle moaning sound at a rated current of around 80% or higher, but this has no impact on performance.

Temperature correction curve

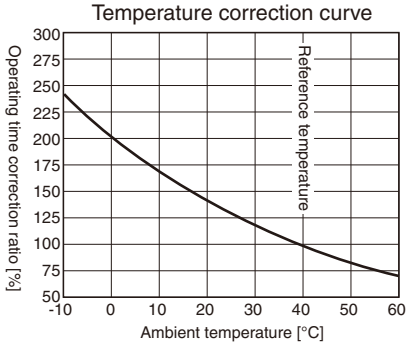

■ **Inter-terminal resistance and power consumption**

at 25℃

Rated current (A)	(mΩ)	Power consumption (W)/phase
0.1	117606.3	1.2
0.3	12335.6	1.1
0.5	4001.0	1.0
1	1081.2	1.1
2	252.9	1.0
3	111.7	1.0
5	45.2	1.1
7	23.7	1.2
10	14.3	1.4
15	6.8	1.5
20	4.8	1.9
25	3.5	2.2
30	2.8	2.5

Resistance tolerance 0.1A to 1A : ±10%
2 to 7A : ±30%
10 to 30A : ±50%

■ Mounting posture

The operating current will differ depending on the mounting angle. Use it after correcting the rated current in accordance with the criteria in the below table.

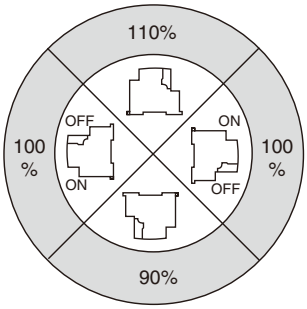

(Note) 100% when mounting as described below.

■ Auxiliary circuit terminal cover mounting method

Mount it by following the procedures in the below figure.

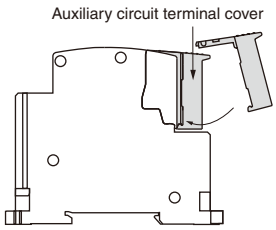

Circuit Protectors
CP30F

■ Dimensions, mm

[1-pole] **[2-pole]** **[3-pole]**

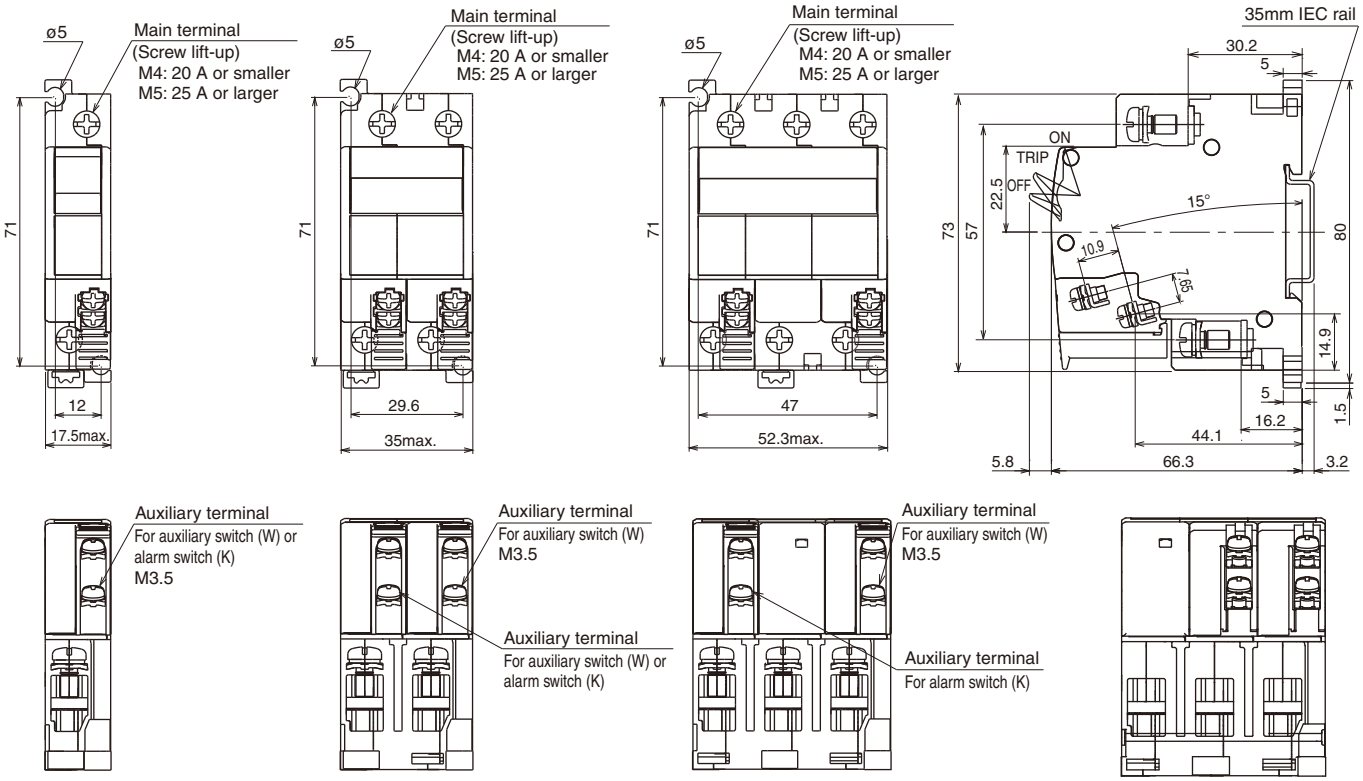

Terminal position when using two auxiliary switches.

Hole drilling dimensions

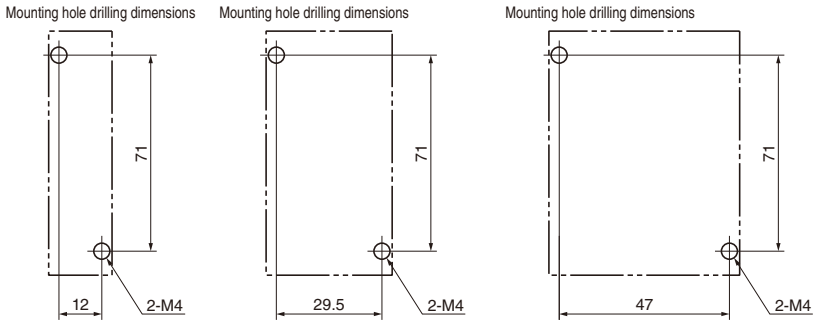

Auxiliary terminal position and contact no.

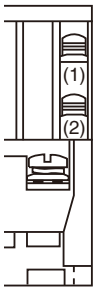

Terminal position	Contact no.			
	Auxiliary switch		Alarm switch	
	NO	NC	NO	NC
(1)	13	11	93	91
(2)	14	12	94	92

Fuji Electric FA Components & Systems Co., Ltd.
Information subject to change without notice

■ Connectable wires and applicable crimp terminals

		Terminal screw	Connectable wire sizes	Applicable ring tongue terminal					Tightening torque (N•m)
				Size	Amount		B dimensions	F dimensions	
Main terminal	20A or less	Square washer equipped self-lifting screw (M4)	0.25 to 6.64mm²	R1.25-4 to R5.5-4	1		9.7mm or less	6.3mm or more (Note 3)	1.2 to 1.5
					2	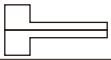			
	25A or more	Square washer equipped self-lifting screw (M5)	1.25 to 6.64mm²	R1.25-5 to R5.5-5	1				2.0 to 2.5
					2				
Auxiliary terminal	W, W1 K, K1	Square washer equipped self-lifting screw (M3.5)	0.5 to 2mm²	R1.25-3.5 to R2-3.5	1		6.6mm or less	4.7mm or more (Note 3)	0.8 to 1.0
					2	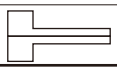			

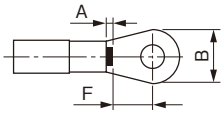

(Note 1) Connect it using a crimp terminal. Contact us if you need to tighten the wires directly.
(Note 2) In the case of a single connection, connect it so that the caulking portion of the wire is in the upper position (handle side) as shown in the above figure.
(Note 3) Includes wire caulking protrusion amount A.

■ Auxiliary and alarm switch mounting specification

	Standard		Nonstandard		Remarks
	W (W1)	K (K1)	WW (W1W1)	WK (W1K1)	Symbols in parentheses are for low level circuits.
1P	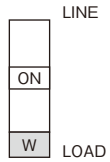	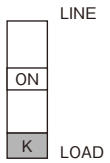			
2P	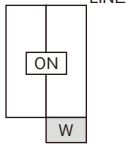	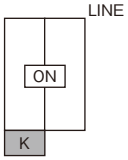	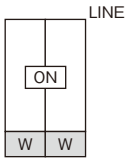	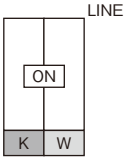	The alarm switch can be mounted on the left pole as seen from the handle. The auxiliary switch can be mounted on the right pole as seen from the handle.
3P	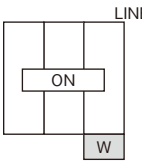	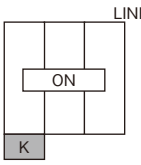	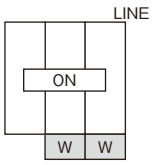	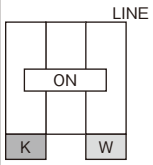	The mounting position of the auxiliary/alarm switch is as shown in the figure on the left.

■ Accessories

● Auxiliary switch (W)

The auxiliary switch operates in conjunction with the switching of the circuit protector and is used for purposes such as electrical indication of the ON-OFF state of the circuit protector.

●Alarm switch (K)

The alarm switch operates only when the circuit protector is automatically interrupted and electrically indicates the automatic breaking.

* For low level circuits, auxiliary and alarm switches with high contact reliability can be produced. (W1, K1)

● Auxiliary and alarm switch ratings [W, K]

	125 V AC	250 V AC	30 V DC	60 V DC
Resistive load	3 A	1 A	2 A	1A
Inductive load	1 A	0.5 A	1 A	0.5 A
Minimum load	5 V, 100mA (approx. 0.5 W)			

(Note1) Inductive load: power factor 0.7 or higher, time constant 7 ms or smaller

● Auxiliary and alarm switch ratings [W1, K1]

	30 V DC
Resistive load	0.1 A
Minimum load	6 V, 5 mA (approx. 0.03 W)

(Note3)The auxiliary and alarm switches operate in conjunction with the main contact of the circuit protector as shown in the table below.

Main contact operation		ON	OFF	Trip (automatic interruption)
Auxiliary switch	NO contact	13 — 14	13 — 14	
	NC contact	11 — 12	11 — 12	
Alarm switch	NO contact	93 — 94		93 — 94
	NC contact	91 — 92		91 — 92

■ Delay device

An extremely large inrush current will be temporarily generated when turning ON the switch of transformer and lamp loads. A delay device is a device that does not malfunction when an inrush current is generated, but rather, correctly cuts off subsequent overcurrent loads within the specified operating characteristics. The circuit protector will not operate even when a pulse is generated with a pulse-width of 8 ms at a current of about 20 times that of the rated current (peak value). This only applies to AC.

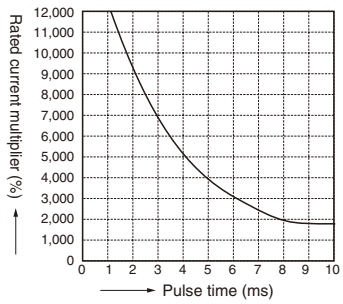

Note1. Rated current multiplier (%)

$$\frac{\text{Pulse current peak value}}{\text{Circuit protector rated current value}}$$

Note2. Pulse current waveform

Sine wave pulse or parabolic pulse (non-repeating pulse)

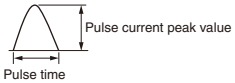

■ Compliance standard

Country	International organization	Europe	Certification authority	U.S.	Canada	China	South Korea	Japan	
Standard	IEC	CE mark	TÜV (Germany)	UL	CSA	GB	KC	JIS	Electrical Appliances and Materials Safety Act

CP31, CP31D, CP32D circuit protectors

250V AC 0.3A to 30A
50V DC 0.3A to 30A

■ Description

The CP31 and CP32 have a similar functions to a molded case circuit breaker and they can be used for normal switching ON and OFF operations while breaking both overload and short-circuit currents. They are available in two time-current versions—an instantaneous and a time-delay version. A suitable type should be selected to match the thermal and permissible current requirements. These are recommended for sequential control circuits, motor control circuits, solenoid-operated valves, heaters and solid-state applications.

■ Features

- Excellent arc interruption
  Since the arc extinguisher uses a loop blow-out system the arc is rapidly extinguished.
- Highly visible handle indication ON shows red and OFF or TRIP blue.
- When positioned at ON the operating handle is completely housed inside the molded case and does not protrude.
  This helps to prevent erroneous operation.
- Trip-free mechanism
- Also available with auxiliary switch SPDT.
- Two time-current versions—instantaneous operation and a time delay type. Select the model best suited to your protection needs.
- CP31D and CP32D types are of front and rail dual mounting.

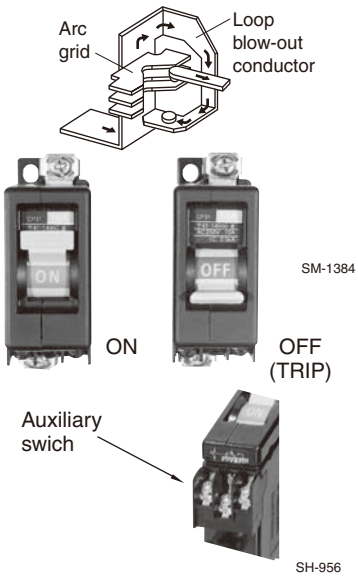

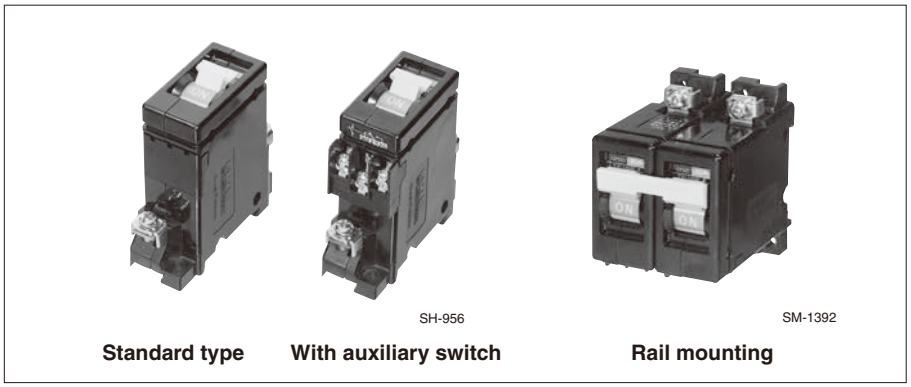

Standard type | With auxiliary switch | Rail mounting

■ Time-delay tripping type

Rated current (A)	CP31 (1-pole) Front mounting Type	Rail mounting Type	CP31D (1-pole) Type	CP32D (2-pole) Type
0.3	**CP31/0.3**	**CP31/0.3X**	**CP31D/0.3**	**CP32D/0.3**
0.5	**CP31/0.5**	**CP31/0.5X**	**CP31D/0.5**	**CP32D/0.5**
1	**CP31/1**	**CP31/1X**	**CP31D/1**	**CP32D/1**
2	**CP31/2**	**CP31/2X**	**CP31D/2**	**CP32D/2**
3	**CP31/3**	**CP31/3X**	**CP31D/3**	**CP32D/3**
5	**CP31/5**	**CP31/5X**	**CP31D/5**	**CP32D/5**
7	**CP31/7**	**CP31/7X**	**CP31D/7**	**CP32D/7**
10	**CP31/10**	**CP31/10X**	**CP31D/10**	**CP32D/10**
15	**CP31/15**	**CP31/15X**	**CP31D/15**	**CP32D/15**
20	**CP31/20**	**CP31/20X**	**CP31D/20**	**CP32D/20**
25	**CP31/25**	**CP31/25X**	**CP31D/25**	**CP32D/25**
30	**CP31/30**	**CP31/30X**	**CP31D/30**	**P32D/30**

■ Typical applications

These CP31 and CP32 protectors are used for normal on-off switching of the power supply while also providing overload protection of the load circuits.

Time-delay tripping type
- Control circuits
- Solenoid valves and motor circuits
- Heater circuits

Instantaneous tripping type
- Semiconductor circuits
- SCR (Silicon controlled rectifier) and triac circuits
- Computer peripheral equipment

■ Type number nomenclature

CP 3 1 □ □ / □ X W DC

Basic type

Frame size
3: 30A

Number of poles
1: 1-pole
2: 2-pole (CP32D)

Rated breaking capacity
Blank: 2.5kA at 250V AC
1.5kA at 50V DC
D: 1kA at 250V AC
1kA at 50V DC

Operating characteristics
Blank: Time-delay tripping
I: Instantaneous tripping
S: Long time-delay tripping (AC circuit only)

Applied circuit
Blank: AC
DC : DC

Optional accessory
Blank: Without auxiliary switch
W: With auxiliary switch

Mounting and connection (CP31 only) *
Blank: Front mounting front connection
X: Rail mounting

Rated current

0.3:	0.3A	7:	7A
0.5:	0.5A	10:	10A
1:	1A	15:	15A
2:	2A	20:	20A
3:	3A	25:	25A
5:	5A	30:	30A

* One and the same CP31D and CP32D can be used for both front mounting and rail mounting.

Circuit Protectors
CP31, CP31D, CP32D

■ Operation

The operation of the magnetic overload release of the CP31, CP31D and CP32D circuit protectors are as shown in the sectional diagram Fig. 1. The magnetic tripping element of the circuit protector is simple—a solenoid coil wound around a hermetically-sealed non-magnetic cylinder containing a spring-loaded movable iron core and a silicon fluid. When currents less than the rated value flow no movement occurs in either the armature or iron core.
However, when a sustained overcurrent occurs the magnetic field is increased. This causes the iron core to move along the cylinder. Once the core reaches the opposite end of the cylinder the armature is attracted which causes the protector to trip as shown in Fig. 2 and 3.
When a short circuit occurs the magnetic flux produced in the coil alone is strong enough to attract the armature regardless of core position. This causes circuit to be interrupted instantaneously. (Fig. 4)

Fig. 1 Normal load

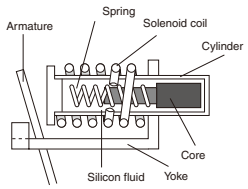

Fig. 2 Overcurrent

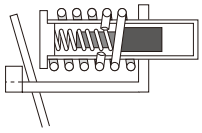

Fig. 3 Overcurrent trip

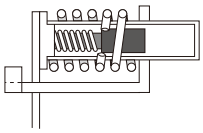

Fig. 4 Short-circuit current trip

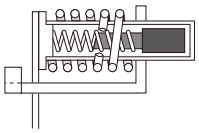

■ Adaptor for flush mounting/CP-E1

These circuit protectors can be modified for flush mounting use by a snap-fitting adaptor CP-E1.

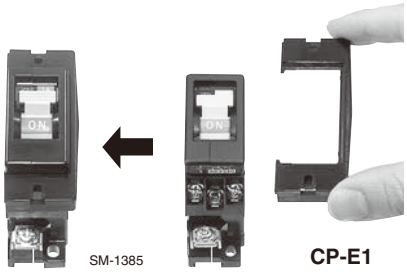

Flush mounting **Front mounting**

■ Snap-on mounting terminal covers

For main terminal: CP-T1
For auxiliary terminal: CP-T2

■ Specifications

Description	CP31	CP31D	CP32D
Pole	1-pole	1-pole	2-pole
Frame size	30 Amps.	30 Amps.	
Rated insulation voltage (Ui)	250V AC, 50V DC	250V AC, 50V DC	
Rated operational voltage (Ue)	250V AC, 50V DC	250V AC, 50V DC	
Rated current	0.3, 0.5, 1, 2, 3, 5, 7, 10, 15, 20, 25, 30A	0.3, 0.5, 1, 2, 3, 5, 7, 10, 15, 20, 25, 30A	
Rated breaking capacity	2500A at 250V AC 1500A at 50V DC	1000A at 250V AC 1000A at 50V DC	
Operating characteristic	Time-delay tripping Instantaneous tripping Long time delay tripping	Time-delay tripping Instantaneous tripping Long time delay tripping	
Ambient temperature	–10˚C to +60˚C	–10˚C to +60˚C	
Dielectric strength	2000V AC 1min.	2000V AC 1min.	
Mechanical durability	10000 operations	6000 operations	
Electrical durability	10000 operations	6000 operations	
Mass	Approx. 100g	Approx. 100g (1-pole), 200g (2-pole)	

Note: Specify DC only when ordering circuit protectors for DC circuits.

■ Characteristic curve

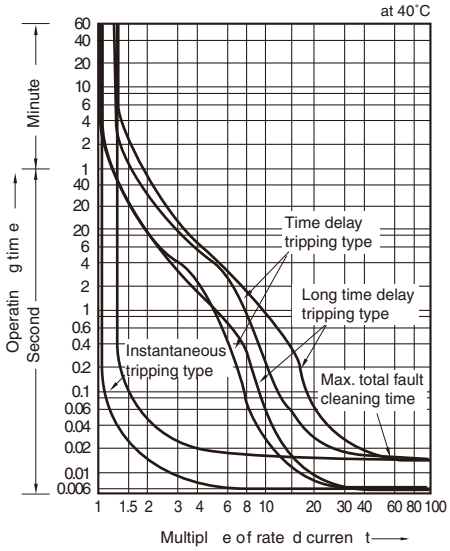

■ Auxiliary switch

Main contact	Auxiliary contact
ON	20 / 21 / 30
OFF or Trip	20 / 21 / 30

Auxiliary contact ratings	
250V AC	Resistive load: 1A Inductive load: 0.5A
125V AC	Resistive load: 3A Inductive load: 1A
50V DC	Resistive load: 1A Inductive load: 0.5A
30V DC	Resistive load: 2A Inductive load: 1A

Ambient temperature compensation
(Time delay tripping type)

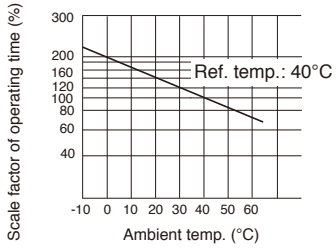

Fuji Electric FA Components & Systems Co., Ltd.
Information subject to change without notice

■ Dimensions, mm

• CP31
Front mounting type

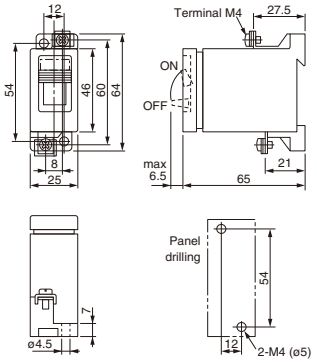

Mass: Approx. 100g

• CP31/W
With auxiliary switch

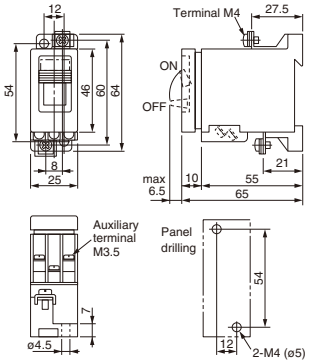

• CP31/X
Rail mounting type

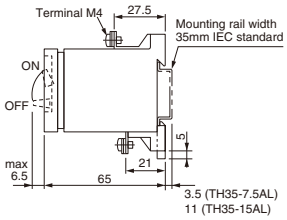

Mounting rail length: 900mm

Type	Material	Mounting pitch (Screw size)
TH35-7.5AL	Aluminium	200mm (M5)
TH35-15AL	Aluminium	400mm (M5)

Clamp TS-XT

• CP31D
Front mounting/Rail mounting type

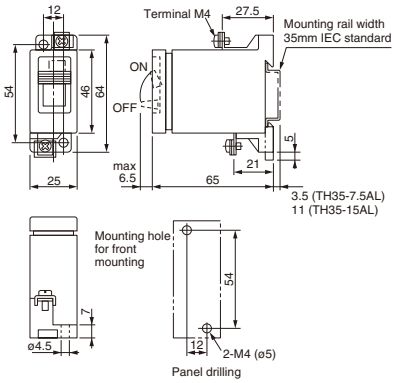

Mass: Approx. 100g

• CP31D/W
With auxiliary switch

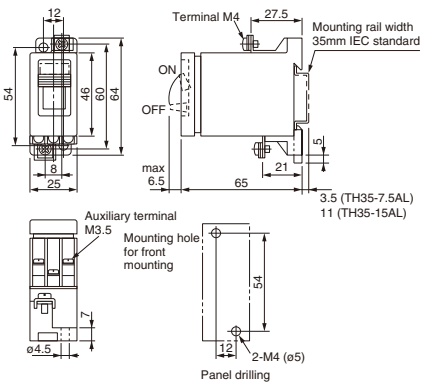

• CP31, CP31D
Flush mounting type

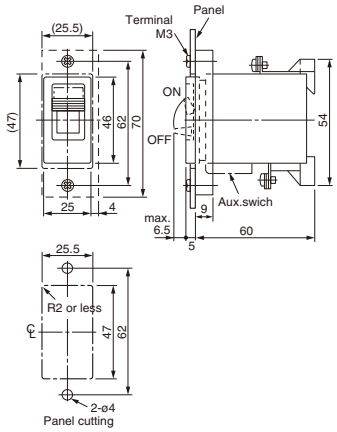

• CP32D
Front mounting/Rail mounting type

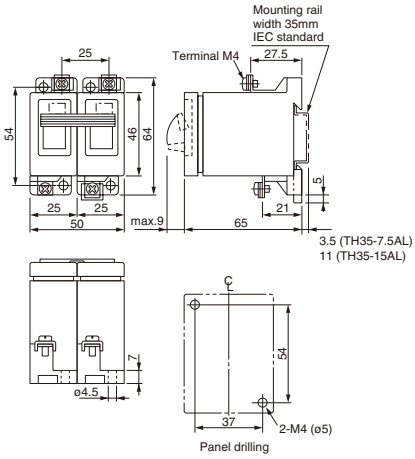

Mass: Approx. 200g

• CP32D/W
With auxiliary switch

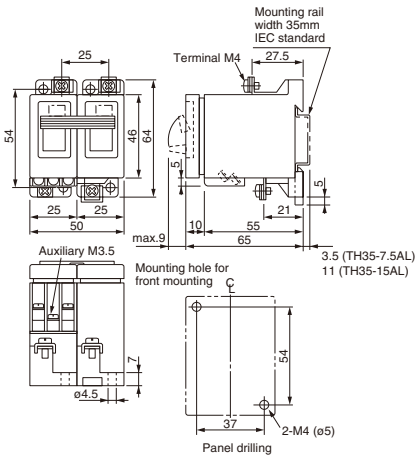

Size of conductors

Type of terminal	Main terminal	Auxiliary terminal
Terminal screw*	M4	M3.5
Connectable wire sizes	1.25–5.5mm^2	1.25–2mm^2
Max. width of applicable crimp terminal	9.8mm (R1.25–4 to R5.5–4)	6.8mm (R2–3.5)
Tightening torque	1.0–1.3N·m	0.8–0.9N·m

Note: * Terminal screws are the self-lifting to facilitate wiring.

■ Ordering information

Specify the following:
1. Type number

Circuit Protectors
CP31P, 32P, 33P

CP-P circuit protectors
250V AC 0.3A to 25A
65V DC 0.3A to 25A

■ Description
CP-P circuit protectors are ideal for electronic circuit protection. The space required per pole is approximately 30% less than that for CP-E models allowing significant space savings. Application at any one of 12 rated currents in the range 0.3A to 25A is possible. CP-P circuit protectors have been approved by c UL us and TÜV Standards.

■ Features
- The mounting space is approximately 30% less than that required with CP-E models, and the width per pole has been reduced by approximately 15%.
- Conforms to IEC Standards. (Conforms to CE markings.)
- c UL us and TÜV approved.
- Operated with an easy-to-use toggle handle.
- Male tab soldering, and right angle terminals are available.

■ Standards
c UL us (File No.E96846)
TÜV (IEC)(R9750278)

■ Accessories
- **Auxiliary switch (Type W)**

This switch is used for indicator lamp or control circuit.
- **Alarm switch (Type K)**

This switch can be connected to a warning lamp or buzzer to indicate when the circuit protector has been tripped.

Auxiliary and alarm switches for low level circuit are also available on request.
(Type W1, K1)

Ratings of auxiliary and alarm switches

Standard type (Type W, K)	
250V AC	Resistive load: 3A Inductive load: 2A
125V AC	Resistive load: 3A Inductive load: 2A
30V DC	Resistive load: 3A Inductive load: 2A

Minimum permissible load

For low level circuit (Type W1, K1)	
24V DC	1mA
12V DC	2mA
6V DC	5mA

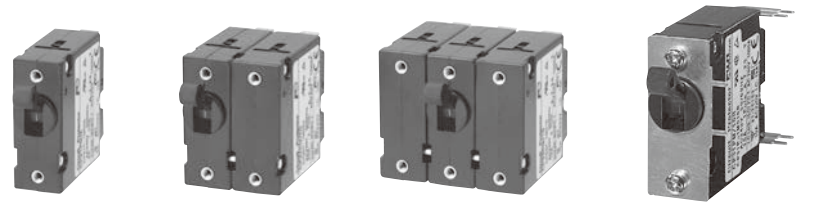

CP31P KKD09-086 | CP32P KKD09-083 | CP33P KKD09-099 | CP31P-R AF99-297

■ Specifications

Type		CP31P	CP32P	CP33P	CP31P-R
Pole		1-pole	2-pole	3-pole	1-pole
Rated insulation voltage (Ui)		250V AC 50/60Hz, 65V DC			
Rated operational voltage (Ue)		240V AC, 60V DC			
Rated current		0.3, 0.5, 0.75, 1, 2, 3, 5, 7.5, 10, 15, 20, 25A			
Rated breaking capacity		1000A at 240V AC 1000A at 60V DC			
Operating characteristic		Long time delay, Medium time delay Short time delay, Instantaneous tripping			
Tripping mechanism		Hydraulic-magnetic			
Ambient temperature		-10˚C to +60˚C			
Electrical durability		10000 operations			
Terminals	Main circuit	Tab			Right angle
	Auxiliary circuit	Soldering			Right angle
Accessories	Auxiliary switch (W, W1)	Available			
	Alarm switch (K, K1)	Available			
Mass (Approx.)		40g	85g	130g	40g

Main contact	Auxiliary switch	Alarm switch
ON	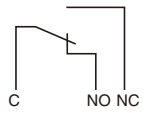	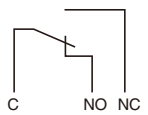
OFF	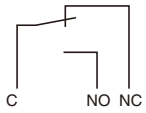	
TRIP		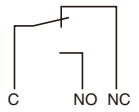

Fuji Electric FA Components & Systems Co., Ltd.
Information subject to change without notice

■ Versions

	Operating characteristic	CP31P (1-pole) Type	CP32P (2-pole) Type	CP33P (3-pole) Type
Applied circuit AC	Long time	**CP31PS/□ ■**	**CP32PS/□ ■**	**CP33PS/□ ■**
	Medium time	**CP31PM/□ ■**	**CP32PM/□ ■**	**CP33PM/□ ■**
	Short time	**CP31PF/□ ■**	**CP32PF/□ ■**	**CP33PF/□ ■**
	Instantaneous	**CP31PI/□ ■**	**CP32PI/□ ■**	**CP33PI/□ ■**
Applied circuit DC	Long time	**CP31PS/□DC■**	**CP32PS/□DC■**	**CP33PS/□DC■**
	Medium time	**CP31PM/□DC■**	**CP32PM/□DC■**	**CP33PM/□DC■**
	Short time	**CP31PF/□DC■**	**CP32PF/□DC■**	**CP33PF/□DC■**
	Instantaneous	**CP31PI/□DC■**	**CP32PI/□DC■**	**CP33PI/□DC■**
With standard auxiliary switch	Long time	**CP31PS/□W■**	**CP32PS/□W■**	**CP33PS/□W■**
	Medium time	**CP31PM/□W■**	**CP32PM/□W■**	**CP33PM/□W■**
	Short time	**CP31PF/□W■**	**CP32PF/□W■**	**CP33PF/□W■**
	Instantaneous	**CP31PI/□W■**	**CP32PI/□W■**	**CP33PI/□W■**
Applied circuit DC	Long time	**CP31PS/□WDC■**	**CP32PS/□WDC■**	**CP33PS/□WDC■**
	Medium time	**CP31PM/□WDC■**	**CP32PM/□WDC■**	**CP33PM/□WDC■**
	Short time	**CP31PF/□WDC■**	**CP32PF/□WDC■**	**CP33PF/□WDC■**
	Instantaneous	**CP31PI/□WDC■**	**CP32PI/□WDC■**	**CP33PI/□WDC■**
With standard alarm switch	Long time	**CP31PS/□K■**	**CP32PS/□K■**	**CP33PS/□K■**
	Medium time	**CP31PM/□K■**	**CP32PM/□K■**	**CP33PM/□K■**
	Short time	**CP31PF/□K■**	**CP32PF/□K■**	**CP33PF/□K■**
	Instantaneous	**CP31PI/□K■**	**CP32PI/□K■**	**CP33PI/□K■**
Applied circuit DC	Long time	**CP31PS/□KDC■**	**CP32PS/□KDC■**	**CP33PS/□KDC■**
	Medium time	**CP31PM/□KDC■**	**CP32PM/□KDC■**	**CP33PM/□KDC■**
	Short time	**CP31PF/□KDC■**	**CP32PF/□KDC■**	**CP33PF/□KDC■**
	Instantaneous	**CP31PI/□KDC■**	**CP32PI/□KDC■**	**CP33PI/□KDC■**
With auxiliary switch for low level circuit	Long time	**CP31PS/□W1■**	**CP32PS/□W1■**	**CP33PS/□W1■**
	Medium time	**CP31PM/□W1■**	**CP32PM/□W1■**	**CP33PM/□W1■**
	Short time	**CP31PF/□W1■**	**CP32PF/□W1■**	**CP33PF/□W1■**
	Instantaneous	**CP31PI/□W1■**	**CP32PI/□W1■**	**CP33PI/□W1■**
Applied circuit DC	Long time	**CP31PS/□W1DC■**	**CP32PS/□W1DC■**	**CP33PS/□W1DC■**
	Medium time	**CP31PM/□W1DC■**	**CP32PM/□W1DC■**	**CP33PM/□W1DC■**
	Short time	**CP31PF/□W1DC■**	**CP32PF/□W1DC■**	**CP33PF/□W1DC■**
	Instantaneous	**CP31PI/□W1DC■**	**CP32PI/□W1DC■**	**CP33PI/□W1DC■**
With alarm switch for low level circuit	Long time	**CP31PS/□K1■**	**CP32PS/□K1■**	**CP33PS/□K1■**
	Medium time	**CP31PM/□K1■**	**CP32PM/□K1■**	**CP33PM/□K1■**
	Short time	**CP31PF/□K1■**	**CP32PF/□K1■**	**CP33PF/□K1■**
	Instantaneous	**CP31PI/□K1■**	**CP32PI/□K1■**	**CP33PI/□K1■**
Applied circuit DC	Long time	**CP31PS/□K1DC■**	**CP32PS/□K1DC■**	**CP33PS/□K1DC■**
	Medium time	**CP31PM/□K1DC■**	**CP32PM/□K1DC■**	**CP33PM/□K1DC■**
	Short time	**CP31PF/□K1DC■**	**CP32PF/□K1DC■**	**CP33PF/□K1DC■**
	Instantaneous	**CP31PI/□K1DC■**	**CP32PI/□K1DC■**	**CP33PI/□K1DC■**

Notes : □ Enter the rated current in the □ mark of the type number. 0.3A: 0.3, 0.5A: 0.5 ------ 25A: 25
■ Enter the main circuit terminal in the ■ mark.

Circuit Protectors
CP31P, 32P, 33P

■ Type number nomenclature

CP3 1 P M / 0.3 W DC P

Basic type

Number of poles
1: 1-pole
2: 2-pole
3: 3-pole

Operating characteristics
S: Long time delay tripping
M: Medium time delay tripping
F: Short time delay tripping
I: Instantaneous

Rated current

0.3: 0.3A	2: 2A	10: 10A
0.5: 0.5A	3: 3A	15: 15A
0.75: 0.75A	5: 5A	20: 20A
1: 1A	7.5: 7.5A	25: 25A

Main circuit terminal
Blank: Male tab terminal
P: Soldering terminal
R: Right angle terminal

Applied circuit
Blank: AC DC: DC circuit

Accessories
Blank: Without accessory
W: With standard auxiliary switch
K: With standard alarm switch
W1: With auxiliary switch for low level circuit
K1: With alarm switch for low level circuit

■ Characteristic curves
AC circuit

Long time delay (S)

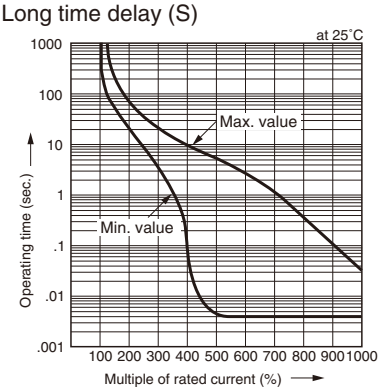

Medium time delay (M)

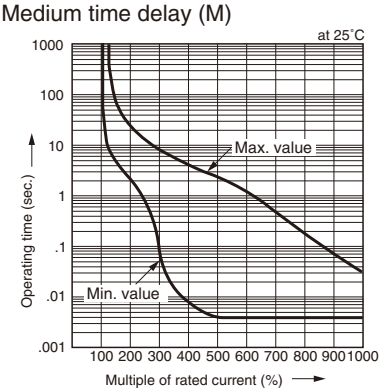

Ambient temperature compensation

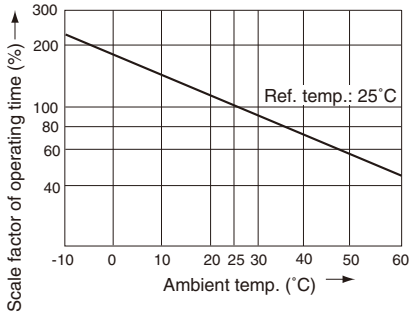

Short time delay (F)

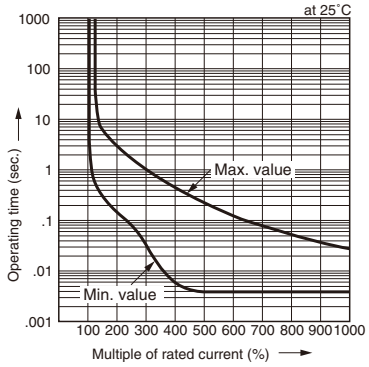

Instantaneous (I)

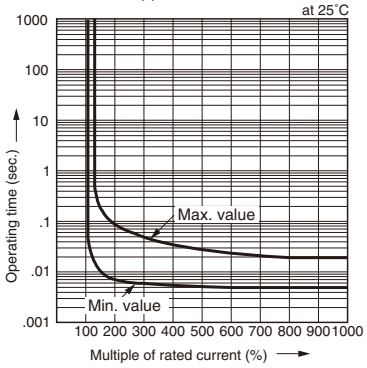

■ Characteristic curves

DC circuit

Long time delay (S)

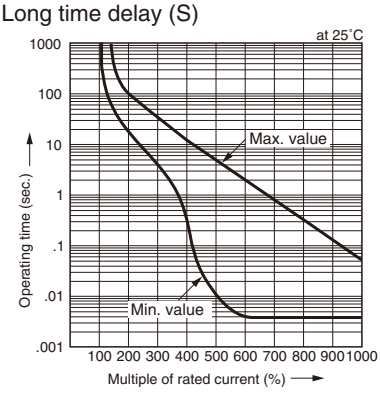

Medium time delay (M)

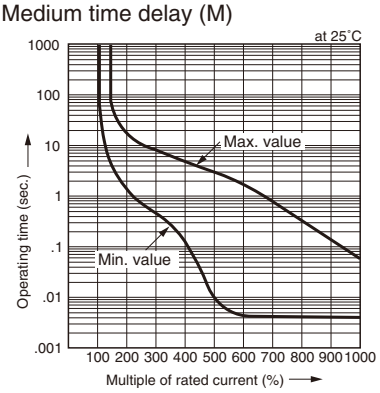

Short time delay (F)

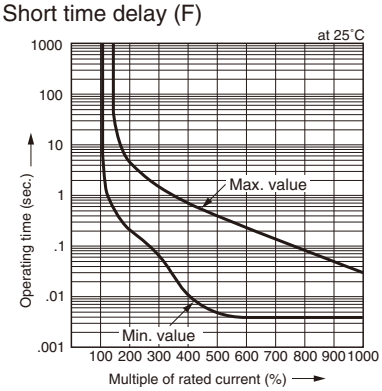

Instantaneous (I)

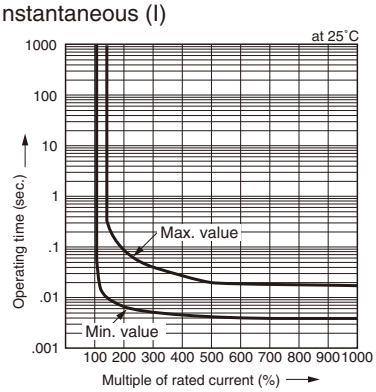

Circuit Protectors
CP31P, 32P, 33P

■ **Dimensions, mm**

1-pole

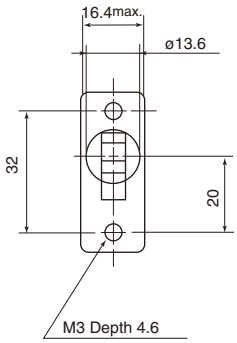

2-pole

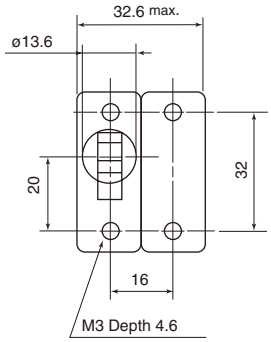

3-pole

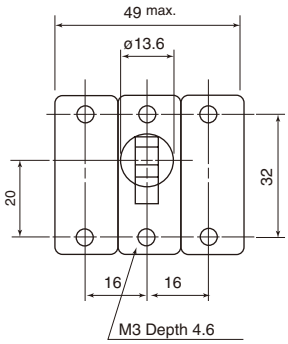

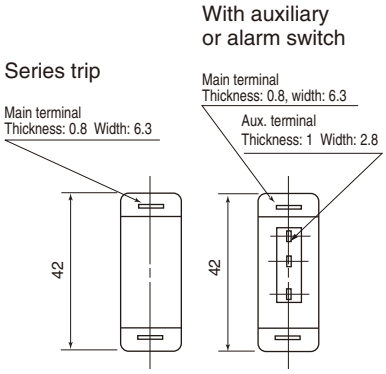

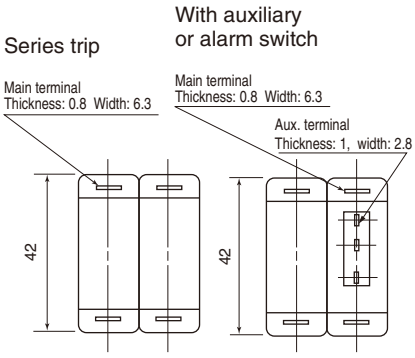

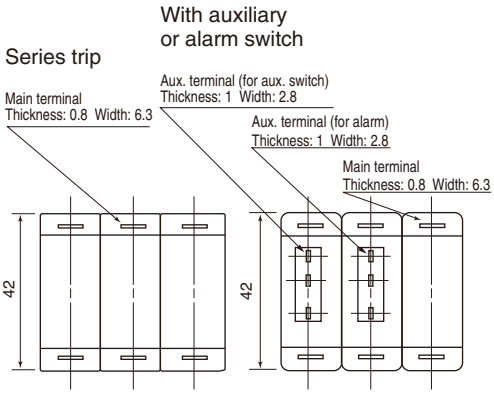

Series trip

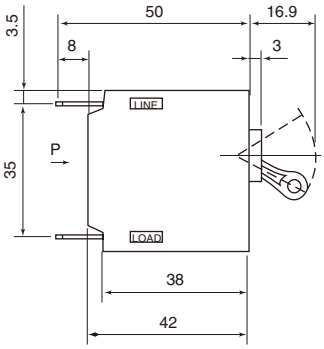

With auxiliary or alarm switch

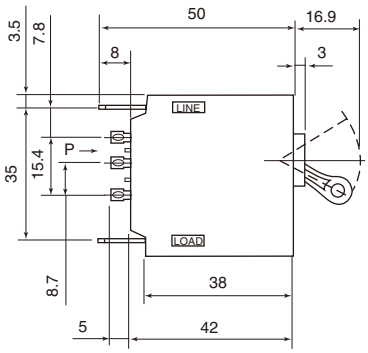

Panel drilling

1-pole

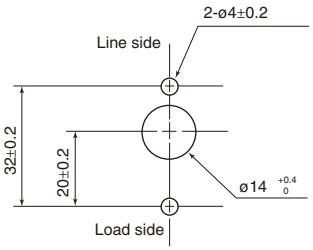

2-pole

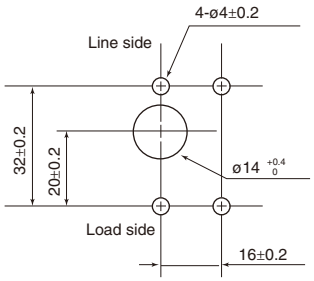

3-pole

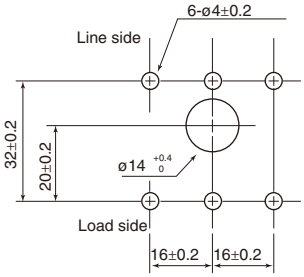

■ Dimensions, mm

Soldering terminal
(With auxiliary terminal)

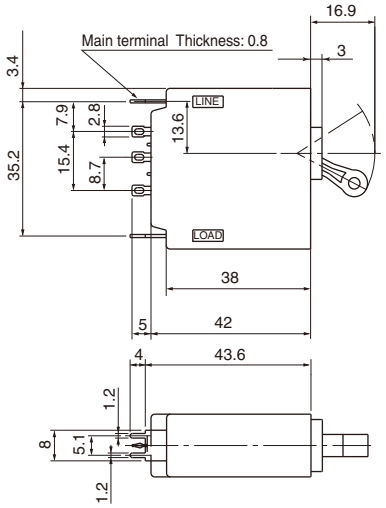

1-pole

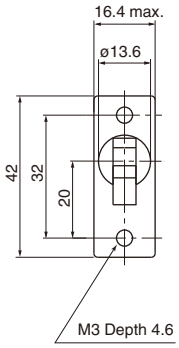

2-pole

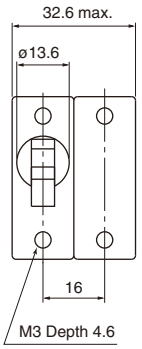

3-pole

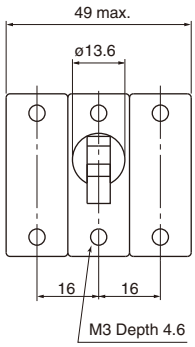

Aux. terminal

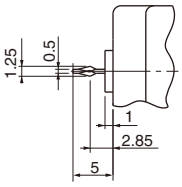

Panel drilling (1-pole)

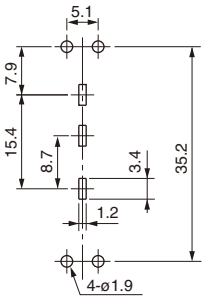

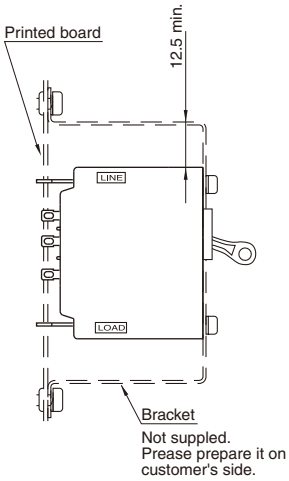

Right angle terminal
(With auxiliary terminal)

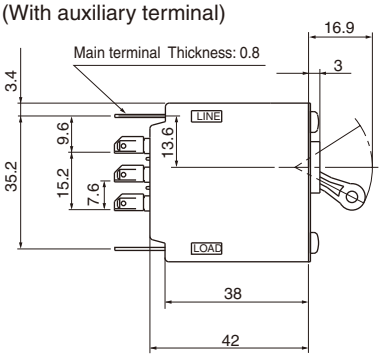

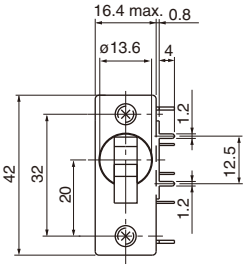

Panel drilling

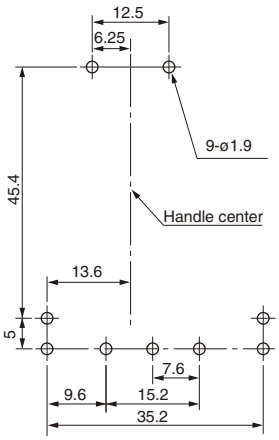

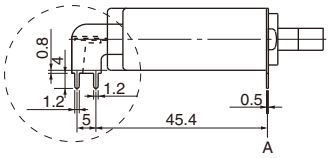

Aux. terminal (Enlarged)

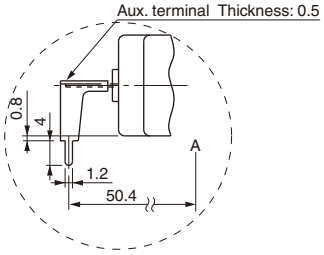

Circuit Protectors
CP51B, 52B, 53B

50A frame size circuit protectors
250V AC 0.3A to 50A
65V DC 0.3A to 50A

■ Features
- Available with ratings from 0.3A to 50A.
- Conforms to IEC Standards. (Conforms to CE markings.)
- c UL us and TÜV approved.
- Rated breaking capacity of 1,500A at 240V AC.
- Stud terminals used.

■ Standards
c UL us (File No.E96846)
TÜV (IEC)(R9750278)

■ Accessories
- **Auxiliary switch (Type W)**

This switch is used for ON-OFF lamp indicator or control circuit.
- **Alarm switch (Type K)**

This switch can be connected to a warning lamp or buzzer to indicate when the circuit protector has been tripped.

Auxiliary and alarm switch for low level circuit are also available on request. (Type W1, K1)

Ratings of auxiliary and alarm switches

Standard type (Type W, K)	
250V AC	Resistive load: 3A Inductive load: 2A
125V AC	Resistive load: 3A Inductive load: 2A
30V DC	Resistive load: 3A Inductive load: 2A

Minimum permissible load

Low level circuit (Type W1, K1)	
24V DC	1mA
12V DC	2mA
6V DC	5mA

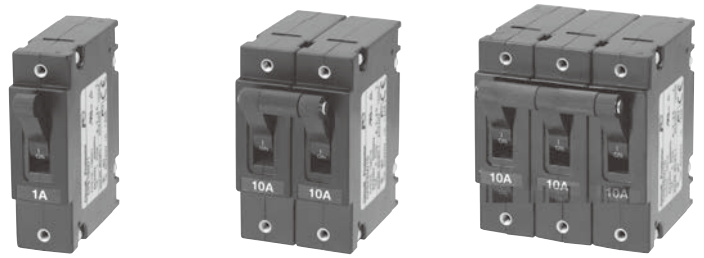

CP51B KKD09-084 **CP52B** KKD09-092 **CP53B** KKD09-096

■ Specifications

Type		CP51B	CP52B	CP53B
Pole		1-pole	2-pole	3-pole
Rated insulation voltage (Ui)		250V AC 50/60Hz, 65V DC		
Rated operational voltage (Ue)		240V AC, 60V DC		
Rated current		0.3, 0.5, 0.75, 1, 2, 3, 5, 7.5, 10, 15, 20, 25, 30, 40, 50A		
Rated breaking capacity		1500A at 240V AC 1000A at 60V DC		
Operating characteristic		Long time delay, Medium time delay Short time delay, Instantaneous tripping		
Tripping mechanism		Hydraulic-magnetic		
Ambient temperature		-10˚C to +60˚C		
Electrical durability		10000 operations		
Terminals	Main circuit Auxiliary circuit	Round stud Soldering		
Accessories	Auxiliary switch (W, W1) Alarm switch (K, K1)	Available Available		
Mass (Approx.)		80g	180g	280g

Main contact	Auxiliary switch/W	Alarm switch/K
ON	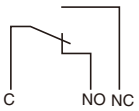	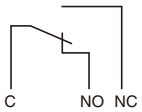
OFF	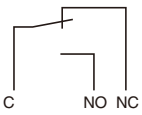	
TRIP		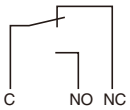

Fuji Electric FA Components & Systems Co., Ltd.
Information subject to change without notice

■ Versions

	Operating characteristic	CP51B (1-pole) Type	CP52B (2-pole) Type	CP53B (3-pole) Type
Applied circuit AC	Long time	**CP51BS/□**	**CP52BS/□**	**CP53BS/□**
	Medium time	**CP51BM/□**	**CP52BM/□**	**CP53BM/□**
	Short time	**CP51BF/□**	**CP52BF/□**	**CP53BF/□**
	Instantaneous	**CP51BI/□**	**CP52BI/□**	**CP53BI/□**
Applied circuit DC	Long time	**CP51BS/□DC**	**CP52BS/□DC**	**CP53BS/□DC**
	Medium time	**CP51BM/□DC**	**CP52BM/□DC**	**CP53BM/□DC**
	Short time	**CP51BF/□DC**	**CP52BF/□DC**	**CP53BF/□DC**
	Instantaneous	**CP51BI/□DC**	**CP52BI/□DC**	**CP53BI/□DC**
With standard auxiliary switch	Long time	**CP51BS/□W**	**CP52BS/□W**	**CP53BS/□W**
	Medium time	**CP51BM/□W**	**CP52BM/□W**	**CP53BM/□W**
	Short time	**CP51BF/□W**	**CP52BF/□W**	**CP53BF/□W**
	Instantaneous	**CP51BI/□W**	**CP52BI/□W**	**CP53BI/□W**
Applied circuit DC	Long time	**CP51BS/□WDC**	**CP52BS/□WDC**	**CP53BS/□WDC**
	Medium time	**CP51BM/□WDC**	**CP52BM/□WDC**	**CP53BM/□WDC**
	Short time	**CP51BF/□WDC**	**CP52BF/□WDC**	**CP53BF/□WDC**
	Instantaneous	**CP51BI/□WDC**	**CP52BI/□WDC**	**CP53BI/□WDC**
With standard alarm switch	Long time	**CP51BS/□K**	**CP52BS/□K**	**CP53BS/□K**
	Medium time	**CP51BM/□K**	**CP52BM/□K**	**CP53BM/□K**
	Short time	**CP51BF/□K**	**CP52BF/□K**	**CP53BF/□K**
	Instantaneous	**CP51BI/□K**	**CP52BI/□K**	**CP53BI/□K**
Applied circuit DC	Long time	**CP51BS/□KDC**	**CP52BS/□KDC**	**CP53BS/□KDC**
	Medium time	**CP51BM/□KDC**	**CP52BM/□KDC**	**CP53BM/□KDC**
	Short time	**CP51BF/□KDC**	**CP52BF/□KDC**	**CP53BF/□KDC**
	Instantaneous	**CP51BI/□KDC**	**CP52BI/□KDC**	**CP53BI/□KDC**
With auxiliary switch for low level circuit	Long time	**CP51BS/□W1**	**CP52BS/□W1**	**CP53BS/□W1**
	Medium time	**CP51BM/□W1**	**CP52BM/□W1**	**CP53BM/□W1**
	Short time	**CP51BF/□W1**	**CP52BF/□W1**	**CP53BF/□W1**
	Instantaneous	**CP51BI/□W1**	**CP52BI/□W1**	**CP53BI/□W1**
Applied circuit DC	Long time	**CP51BS/□W1DC**	**CP52BS/□W1DC**	**CP53BS/□W1DC**
	Medium time	**CP51BM/□W1DC**	**CP52BM/□W1DC**	**CP53BM/□W1DC**
	Short time	**CP51BF/□W1DC**	**CP52BF/□W1DC**	**CP53BF/□W1DC**
	Instantaneous	**CP51BI/□W1DC**	**CP52BI/□W1DC**	**CP53BI/□W1DC**
With alarm switch for low level circuit	Long time	**CP51BS/□K1**	**CP52BS/□K1**	**CP53BS/□K1**
	Medium time	**CP51BM/□K1**	**CP52BM/□K1**	**CP53BM/□K1**
	Short time	**CP51BF/□K1**	**CP52BF/□K1**	**CP53BF/□K1**
	Instantaneous	**CP51BI/□K1**	**CP52BI/□K1**	**CP53BI/□K1**
Applied circuit DC	Long time	**CP51BS/□K1DC**	**CP52BS/□K1DC**	**CP53BS/□K1DC**
	Medium time	**CP51BM/□K1DC**	**CP52BM/□K1DC**	**CP53BM/□K1DC**
	Short time	**CP51BF/□K1DC**	**CP52BF/□K1DC**	**CP53BF/□K1DC**
	Instantaneous	**CP51BI/□K1DC**	**CP52BI/□K1DC**	**CP53BI/□K1DC**

Note : □ Enter the rated current in the □ mark of the type number. 0.3A: 0.3, 0.5A: 0.5 ------ 50A: 50

Circuit Protectors
CP51B, 52B, 53B

■ Type number nomenclature

CP5 1 B M / 0.3 W DC

Basic type
CP5□B

Number of poles
1: 1-pole
2: 2-pole
3: 3-pole

Operating characteristics
S: Long time delay tripping
M: Medium time delay tripping
F: Short time delay tripping
I: Instantaneous

Rated current

0.3: 0.3A	2: 2A	10: 10A	30: 30A
0.5: 0.5A	3: 3A	15: 15A	40: 40A
0.75:0.75A	5: 5A	20: 20A	50: 50A
1: 1A	7.5: 7.5A	25: 25A	

Applied circuit
Blank: AC DC: DC circuit

Accessories
Blank: Without accessory
W: With standard auxiliary switch
K: With standard alarm switch
W1: With auxiliary switch for low level circuit
K1: With alarm switch for low level circuit

■ Characteristic curves
AC circuit

Long time delay (S)

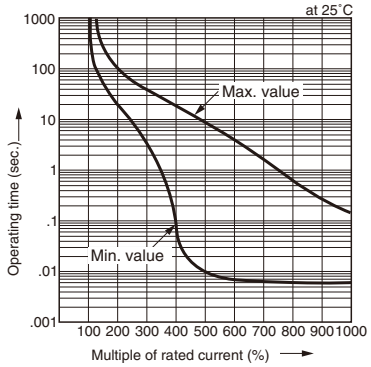

Medium time delay (M)

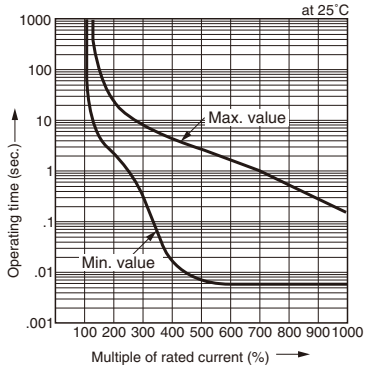

Ambient temperature compensation

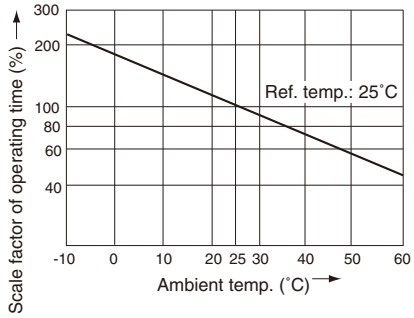

Short time delay (F)

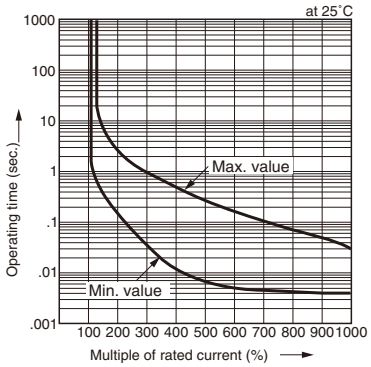

Instantaneous (I)

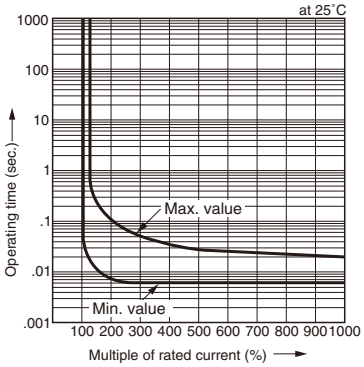

■ Characteristic curves

DC circuit

Long time delay (S)

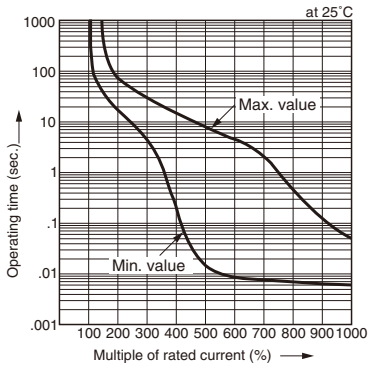

Medium time delay (M)

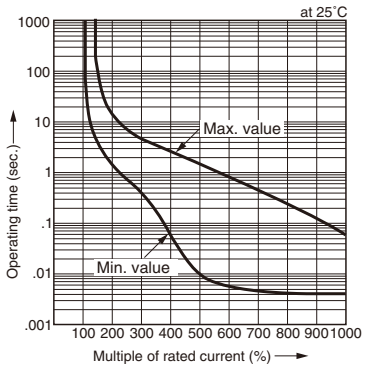

Short time delay (F)

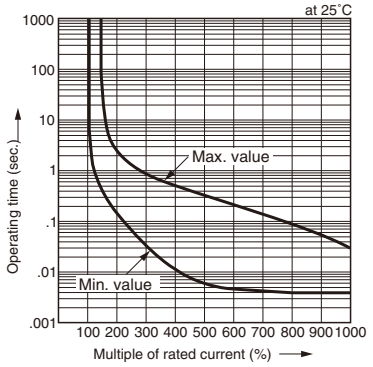

Instantaneous (I)

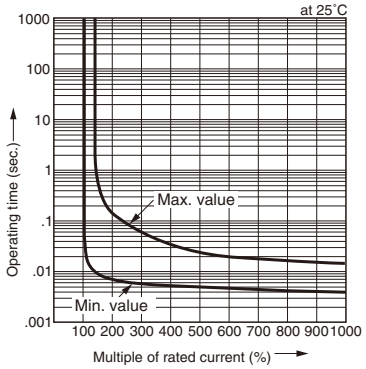

Circuit Protectors
CP51B, 52B, 53B

■ **Dimensions, mm**

1-pole

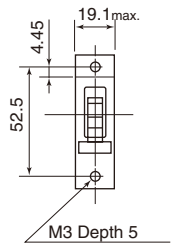

2-pole

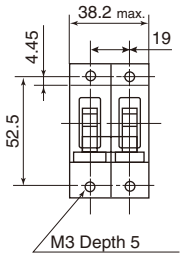

3-pole

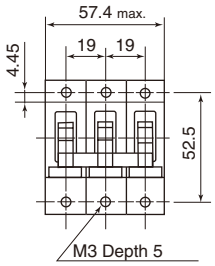

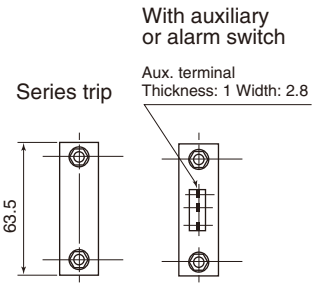

View from back

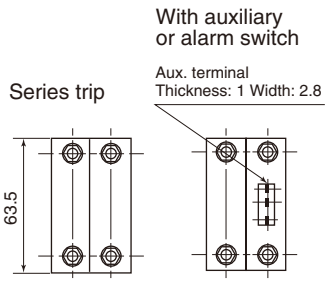

View from back

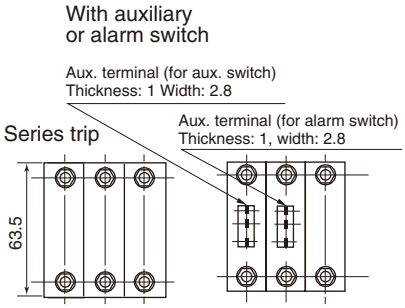

View from back

Series trip

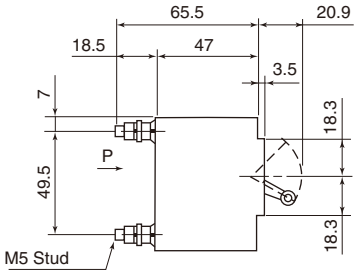

With auxiliary or alarm switch

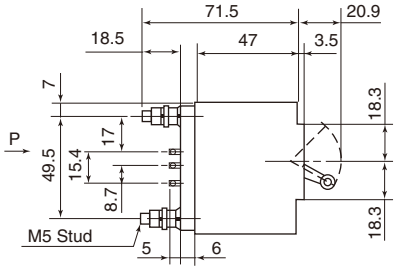

Panel drilling

1-pole

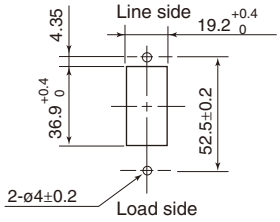

2-pole

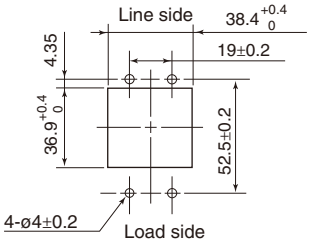

3-pole

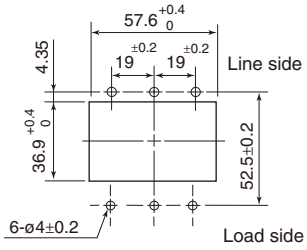

Circuit Protectors
CP31E, 32E, 33E, 34E, 31V, 32V, 33V, 34V

CP-E and CP-V circuit protectors
250V AC 0.05A to 30A
65V DC 0.05A to 30A

■ Description
CP-E, CP-V circuit protectors have been specially developed for computers, communication equipment and peripheral applications. In these situations power irregularities can lead to serious and expensive damage, and reliable protective equipment is required. FUJI circuit protectors meet this need. These protectors are available with ratings from 50mA to 30A. They are widely used in FA, office machinery, communication equipment and industrial computer-controlled equipment. They are also suitable for extremely severe service since they can withstand mechanical shocks up to 981m/s^2.

■ Features
- Available in instantaneous, short time, medium time and long time delay types, thus making them suitable for a wide range of electronic applications.
- Also available in types having inertia delay characteristics. These do not trip due to inrush current.
- For internal circuits, series trip, shunt trip, relay trip and switch types are available.
- Circuit protectors with an auxiliary and alarm switch are also available.
- Single pole to 3-pole CP types can be operated with a single handle. Handle holes are easily made in panels.
- Widths down to 19mm.

■ Standards
c UL us : CP-E, CP-V (File No. E96846), (File No. E83461 for switch type), Socket CP-S (E96846SP, E83461, LR67978 (CSA C22.2 No.14))
TÜV (IEC): CP-V(R50064785)

■ Accessories
- **Auxiliary switch (Type W)**

This switch is used for indicator lamp or control circuit.
- **Alarm switch (Type K)**

This switch can be connected to a warning lamp or buzzer to indicate when the circuit protector has been tripped.

Auxiliary (W1) and alarm (K1) switch for low level circuit are also available on request.

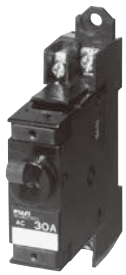
SM-1393
CP31E with socket

SM-1376
CP31V

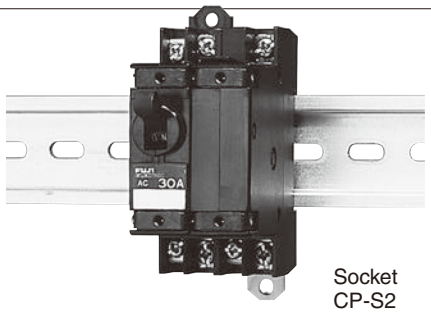

SM-1382
CP32E
Rail mounting

■ Specifications

Type			CP31E, V	CP32E, V	CP33E, V	CP34E, V
Pole			1-pole	2-pole	3-pole	4-pole
Rated insulation voltage (Ui)			250V AC 50/60Hz, 65V DC			
Rated operational voltage (Ue)			250V AC 50/60Hz, 60V DC			
Rated current			0.05, 0.1, 0.25, 0.5, 0.75, 1, 2, 2.5, 3, 5, 7.5 10, 15, 20, 25, 30A			
Rated breaking capacity			1000A at 250V AC 1000A at 60V DC			
Operating characteristic			Long time delay, Medium time delay Short time delay, Instantaneous tripping			
Tripping mechanism			Hydraulic-magnetic			
Ambient temperature			–10˚C to +60˚C			
Electrical durability			10000 operations			
Terminals	Main circuit		Tab, screw, printed board			
	Auxiliary circuit		Tab, printed board			
Accessories	Auxiliary switch	(W, W1)	Available			
	Alarm switch	(K, K1)	Available			
	Inertia delay device	(D)	Available			
Mass (Approx.)			60g	120g	180g	240g

Ratings of auxiliary and alarm switches

250V AC	Resistive load: 3A Inductive load: 2A
125V AC	Resistive load: 5A Inductive load: 3A
60V DC	Resistive load: 1A Inductive load: 0.5A
30V DC	Resistive load: 4A Inductive load: 3A

- **Inertia delay device (Type D)**

When a circuit carrying loads such as transformers or lamps is closed, an extremely large inrush current flows. This inertia delay device is designed to prevent the circuit protector from operating erroneously due to such inrush current and to carry out an interruption within the prescribed operating characteristics in the face of an overcurrent.
For instance, the following graph explains that the protector does not operate even when a pulse current of approx. 18 times (peak value) rated current with a pulse width of 8ms flows.

Inertia delay characteristics

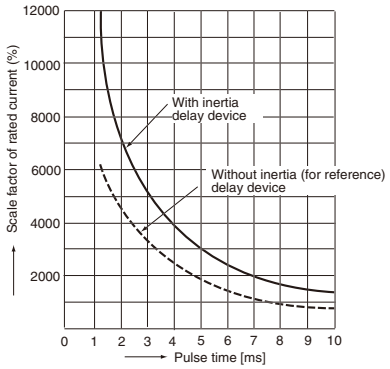

- Scale factor of the rated current (%)

$$\frac{\text{Peak value of pulse current}}{\text{Rated current for protector}} \times 100$$

- Waveform of pulse current: Sinusoidal wave or parabolic pulse

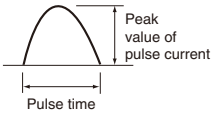

Circuit Protectors
CP31E, 32E, 33E, 34E

■ Versions

Internal circuit	Operating characteristics	CP31E (1-pole) Type	CP32E (2-pole) Type	CP33E (3-pole) Type	CP34E (4-pole) Type
Series trip type	Long time	**CP31E/□**	**CP32E/□**	**CP33E/□**	**CP34E/□**
	Medium time	**CP31EM/□**	**CP32EM/□**	**CP33EM/□**	**CP34EM/□**
	Short time	**CP31EF/□**	**CP32EF/□**	**CP33EF/□**	**CP34EF/□**
	Instantaneous	**CP31EI/□**	**CP32EI/□**	**CP33EI/□**	**CP34EI/□**
Series trip type With inertia delay device	Long time	**CP31E/□D**	**CP32E/□D**	**CP33E/□D**	**CP34E/□D**
	Medium time	**CP31EM/□D**	**CP32EM/□D**	**CP33EM/□D**	**CP34EM/□D**
	Short time	**CP31EF/□D**	**CP32EF/□D**	**CP33EF/□D**	**CP34EF/□D**
	Instantaneous	—	—	—	—
Series trip type With auxiliary switch	Long time	**CP31E/□W**	**CP32E/□W**	**CP33E/□W**	**CP34E/□W**
	Medium time	**CP31EM/□W**	**CP32EM/□W**	**CP33EM/□W**	**CP34EM/□W**
	Short time	**CP31EF/□W**	**CP32EF/□W**	**CP33EF/□W**	**CP34EF/□W**
	Instantaneous	**CP31EI/□W**	**CP32EI/□W**	**CP33EI/□W**	**CP34EI/□W**
Series trip type With auxiliary switch and inertia delay device	Long time	**CP31E/□WD**	**CP32E/□WD**	**CP33E/□WD**	**CP34E/□WD**
	Medium time	**CP31EM/□WD**	**CP32EM/□WD**	**CP33EM/□WD**	**CP34EM/□WD**
	Short time	**CP31EF/□WD**	**CP32EF/□WD**	**CP33EF/□WD**	**CP34EF/□WD**
	Instantaneous	—	—	—	—
Series trip type With alarm switch	Long time	**CP31E/□K**	**CP32E/□K**	**CP33E/□K**	**CP34E/□K**
	Medium time	**CP31EM/□K**	**CP32EM/□K**	**CP33EM/□K**	**CP34EM/□K**
	Short time	**CP31EF/□K**	**CP32EF/□K**	**CP33EF/□K**	**CP34EF/□K**
	Instantaneous	**CP31EI/□K**	**CP32EI/□K**	**CP33EI/□K**	**CP34EI/□K**
Series trip type With alarm switch and inertia delay device	Long time	**CP31E/□KD**	**CP32E/□KD**	**CP33E/□KD**	**CP34E/□KD**
	Medium time	**CP31EM/□KD**	**CP32EM/□KD**	**CP33EM/□KD**	**CP34EM/□KD**
	Short time	**CP31EF/□KD**	**CP32EF/□KD**	**CP33EF/□KD**	**CP34EF/□KD**
	Instantaneous	—	—	—	—
Shunt trip type	Long time	**CP31E2/□**	**CP32E2/□**	**CP33E2/□**	**CP34E2/□**
	Medium time	**CP31E2M/□**	**CP32E2M/□**	**CP33E2M/□**	**CP34E2M/□**
	Short time	**CP31E2F/□**	**CP32E2F/□**	**CP33E2F/□**	**CP34E2F/□**
	Instantaneous	**CP31E2I/□**	**CP32E2I/□**	**CP33E2I/□**	**CP34E2I/□**
Shunt trip type With inertia delay device	Long time	**CP31E2/□D**	**CP32E2/□D**	**CP33E2/□D**	**CP34E2/□D**
	Medium time	**CP31E2M/□D**	**CP32E2M/□D**	**CP33E2M/□D**	**CP34E2M/□D**
	Short time	**CP31E2F/□D**	**CP32E2F/□D**	**CP33E2F/□D**	**CP34E2F/□D**
	Instantaneous	—	—	—	—
Relay trip type (Current trip)	Long time	**CP31E3/□**	**CP32E3/□**	**CP33E3/□**	**CP34E3/□**
	Medium time	**CP31E3M/□**	**CP32E3M/□**	**CP33E3M/□**	**CP34E3M/□**
	Short time	**CP31E3F/□**	**CP32E3F/□**	**CP33E3F/□**	**CP34E3F/□**
	Instantaneous	**CP31E3I/□**	**CP32E3I/□**	**CP33E3I/□**	**CP34E3I/□**
Relay trip type With inertia delay device	Long time	**CP31E3/□D**	**CP32E3/□D**	**CP33E3/□D**	**CP34E3/□D**
	Medium time	**CP31E3M/□D**	**CP32E3M/□D**	**CP33E3M/□D**	**CP34E3M/□D**
	Short time	**CP31E3F/□D**	**CP32E3F/□D**	**CP33E3F/□D**	**CP34E3F/□D**
	Instantaneous	—	—	—	—
Switch type		**CP31E4/30**	**CP32E4/30**	**CP33E4/30**	**CP34E4/30**
Switch type With auxiliary switch		**CP31E4/30W**	**CP32E4/30W**	**CP33E4/30W**	**CP34E4/30W**
Relay trip type (Shunt trip)		**CP31E5/30**	**CP32E5/30**	**CP33E5/30**	**CP34E5/30**
Dual coil type	Long time	**CP31E6/□**	**CP32E6/□**	**CP33E6/□**	**CP34E6/□**
	Medium time	**CP31E6M/□**	**CP32E6M/□**	**CP33E6M/□**	**CP34E6M/□**
	Short time	**CP31E6F/□**	**CP32E6F/□**	**CP33E6F/□**	**CP34E6F/□**
	Instantaneous	**CP31E6I/□**	**CP32E6I/□**	**CP33E6I/□**	**CP34E6I/□**
Dual coil type With inertia delay device	Long time	**CP31E6/□D**	**CP32E6/□D**	**CP33E6/□D**	**CP34E6/□D**
	Medium time	**CP31E6M/□D**	**CP32E6M/□D**	**CP33E6M/□D**	**CP34E6M/□D**
	Short time	**CP31E6F/□D**	**CP32E6F/□D**	**CP33E6F/□D**	**CP34E6F/□D**
	Instantaneous	—	—	—	—

Notes: □ Enter the rated current in the □ mark of the type number.
0.05A: 0.05, 0.1A: 0.1, 0.25A: 0.25.....30A: 30
• When ordering types with auxiliary switch (**W1**) or alarm switch (**K1**), add suffix to type number.

■ Versions

Internal circuit	Operating characteristics	CP31V (1-pole) Type	CP32V (2-pole) Type	CP33V (3-pole) Type	CP34V (4-pole) Type
Series trip type	Long time	**CP31V/□**	**CP32V/□**	**CP33V/□**	**CP34V/□**
	Medium time	**CP31VM/□**	**CP32VM/□**	**CP33VM/□**	**CP34VM/□**
	Short time	**CP31VF/□**	**CP32VF/□**	**CP33VF/□**	**CP34VF/□**
	Instantaneous	**CP31VI/□**	**CP32VI/□**	**CP33VI/□**	**CP34VI/□**
Series trip type With inertia delay device	Long time	**CP31V/□D**	**CP32V/□D**	**CP33V/□D**	**CP34V/□D**
	Medium time	**CP31VM/□D**	**CP32VM/□D**	**CP33VM/□D**	**CP34VM/□D**
	Short time	**CP31VF/□D**	**CP32VF/□D**	**CP33VF/□D**	**CP34VF/□D**
	Instantaneous	**—**	**—**	**—**	**—**
Series trip type With auxiliary switch	Long time	**CP31V/□W**	**CP32V/□W**	**CP33V/□W**	**CP34V/□W**
	Medium time	**CP31VM/□W**	**CP32VM/□W**	**CP33VM/□W**	**CP34VM/□W**
	Short time	**CP31VF/□W**	**CP32VF/□W**	**CP33VF/□W**	**CP34VF/□W**
	Instantaneous	**CP31VI/□W**	**CP32VI/□W**	**CP33VI/□W**	**CP34VI/□W**
Series trip type With auxiliary switch and inertia delay device	Long time	**CP31V/□WD**	**CP32V/□WD**	**CP33V/□WD**	**CP34V/□WD**
	Medium time	**CP31VM/□WD**	**CP32VM/□WD**	**CP33VM/□WD**	**CP34VM/□WD**
	Short time	**CP31VF/□WD**	**CP32VF/□WD**	**CP33VF/□WD**	**CP34VF/□WD**
	Instantaneous	**—**	**—**	**—**	**—**
Series trip type With alarm switch	Long time	**CP31V/□K**	**CP32V/□K**	**CP33V/□K**	**CP34V/□K**
	Medium time	**CP31VM/□K**	**CP32VM/□K**	**CP33VM/□K**	**CP34VM/□K**
	Short time	**CP31VF/□K**	**CP32VF/□K**	**CP33VF/□K**	**CP34VF/□K**
	Instantaneous	**CP31VI/□K**	**CP32VI/□K**	**CP33VI/□K**	**CP34VI/□K**
Series trip type With alarm switch and inertia delay device	Long time	**CP31V/□KD**	**CP32V/□KD**	**CP33V/□KD**	**CP34V/□KD**
	Medium time	**CP31VM/□KD**	**CP32VM/□KD**	**CP33VM/□KD**	**CP34VM/□KD**
	Short time	**CP31VF/□KD**	**CP32VF/□KD**	**CP33VF/□KD**	**CP34VF/□KD**
	Instantaneous	**—**	**—**	**—**	**—**
Shunt trip type	Long time	**CP31V2/□**	**CP32V2/□**	**CP33V2/□**	**CP34V2/□**
	Medium time	**CP31V2M/□**	**CP32V2M/□**	**CP33V2M/□**	**CP34V2M/□**
	Short time	**CP31V2F/□**	**CP32V2F/□**	**CP33V2F/□**	**CP34V2F/□**
	Instantaneous	**CP31V2I/□**	**CP32V2I/□**	**CP33V2I/□**	**CP34V2I/□**
Shunt trip type With inertia delay device	Long time	**CP31V2/□D**	**CP32V2/□D**	**CP33V2/□D**	**CP34V2/□D**
	Medium time	**CP31V2M/□D**	**CP32V2M/□D**	**CP33V2M/□D**	**CP34V2M/□D**
	Short time	**CP31V2F/□D**	**CP32V2F/□D**	**CP33V2F/□D**	**CP34V2F/□D**
	Instantaneous	**—**	**—**	**—**	**—**
Switch type		**CP31V4/30**	**CP32V4/30**	**CP33V4/30**	**CP34V4/30**
Switch type With auxiliary switch		**CP31V4/30W**	**CP32V4/30W**	**CP33V4/30W**	**CP34V4/30W**

Notes: □ Enter the rated current in the □ mark of the type number.
0.05A: 0.05, 0.1A: 0.1, 0.25A: 0.25.....30A: 30
• When ordering types with auxiliary switch (**W1**) or alarm switch (**K1**), add suffix to type number.

■ Sockets (CP3□E only)

No. of poles	Circuit protector Type	Auxiliary contact	Alarm contact	Socket Type	Terminal cover Type
1-pole	CP31E, 31E4	–	–	**CP-S1**	**CP-T3**
	CP31E/ W, 31E4/ W	1NO	–	**CP-S1A**	
		1NC	–	**CP-S1B**	
	CP31E/K	–	1NC	**CP-S1A**	
		–	1NO	**CS-S1B**	
2-pole	CP32E, 32E4	–	–	**CP-S2**	
	CP32E/W, 32E4/W	SPDT	–	**CP-S2C**	
	CP32E/K	–	SPDT		

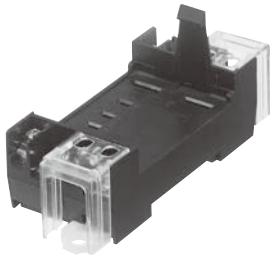

AF91-566

Circuit Protectors
CP31E, 32E, 33E, 34E, 31V, 32V, 33V, 34V

■ Type number nomenclature

CP3 1 E 2 M /□ W D DC N (AC 200V)

Basic type
CP3□E (c UL us), CP3□V (c UL us, IEC)

Number of poles
1: 1-pole 3: 3-pole
2: 2-pole 4: 4-pole

Internal circuit
Blank: Series trip type
2: Shunt trip type
3: Relay trip type (Current trip) *
4: Switch type
5: Relay trip type (Shunt trip) *
6: Dual coil *
* for CP3□E only

Operating characteristics
Blank: Long time delay
M: Medium time delay
F: Short time delay
I: Instantaneous

Rated current

0.05: 0.05A	2: 2A	10: 10A
0.1: 0.1A	2.5: 2.5A	15: 15A
0.25: 0.25A	3: 3A	20: 20A
0.5: 0.5A	5: 5A	25: 25A
0.75: 0.75A	7.5: 7.5A	30: 30A
1: 1A		

Rated tripping voltage
(for CP3□E5 and CP3□E6 only)
- Relay trip type (shunt trip type) / CP3□E5
  200V, 100V, 48V, 24V AC 50/60Hz or DC
- Dual coil type / CP3□E6
  100V, 50V, 32V, 24V, 12V, 6V AC 50/60Hz or DC

Main terminal
Blank: Tab terminal
N: Screw terminal (series trip type and switch type)
P: Printed board type (CP3□E only)

Circuit voltage
Blank: AC circuit
DC: DC circuit

Inertia delay device
Blank: Without inertia delay device
D: With inertia delay device
(Except instantaneous type)

Accessories
Blank: Without accessories
W: With standard auxiliary switch
(For series and switch types)
W1: With auxiliary switch for low level circuit
K: With standard alarm switch (For series type)
K1: With alarm switch for low level circuit

■ Ordering information

Specify the following:
1. Type number
   (Including rated tripping voltage)

Fuji Electric FA Components & Systems Co., Ltd.
Information subject to change without notice

■ Dimensions, mm

• Series trip and switch types

Tab terminal

CP31E, CP31E4

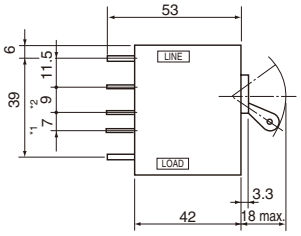

CP31V, CP31V4

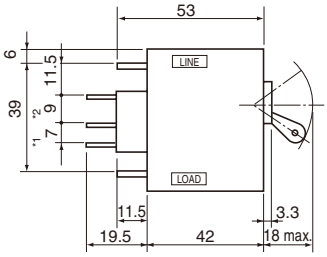

1-pole 2-pole 3-pole 4-pole

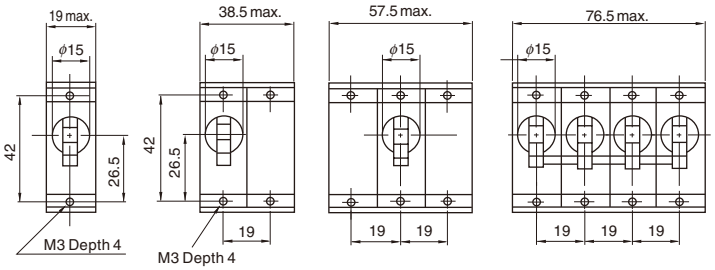

*1 With auxiliary switch (W1), With alarm switch (K1) : 6
*2 With auxiliary switch (W1), With alarm switch (K1) : 10

Screw terminal

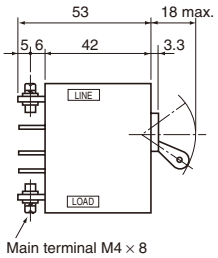

Main terminal M4 × 8
Thickness: 0.8
Width: 6.3

Panel drilling

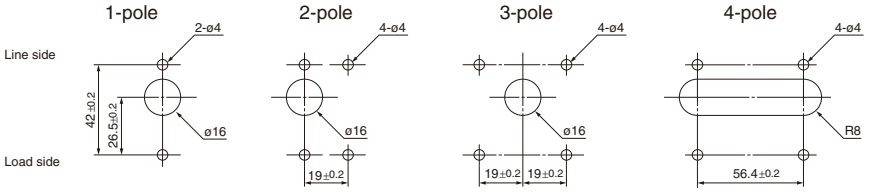

• Shunt trip type

Tab terminal

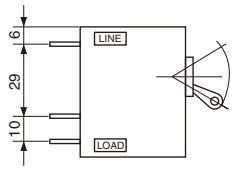

• Relay trip type (CP-E only)

Tab terminal

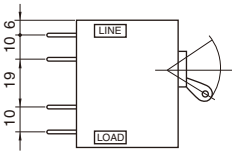

Socket for rail mounting (CP-E/Series trip and switch types)

1-pole 2-pole

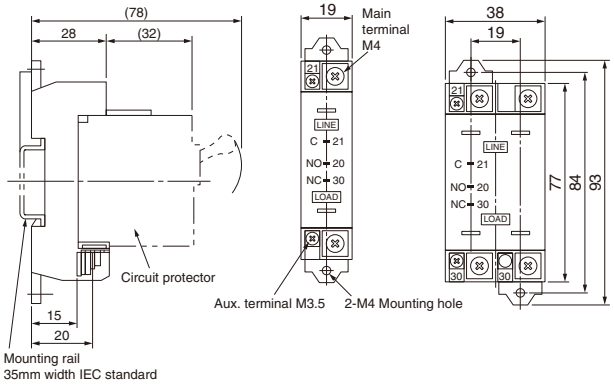

Terminal arrangement

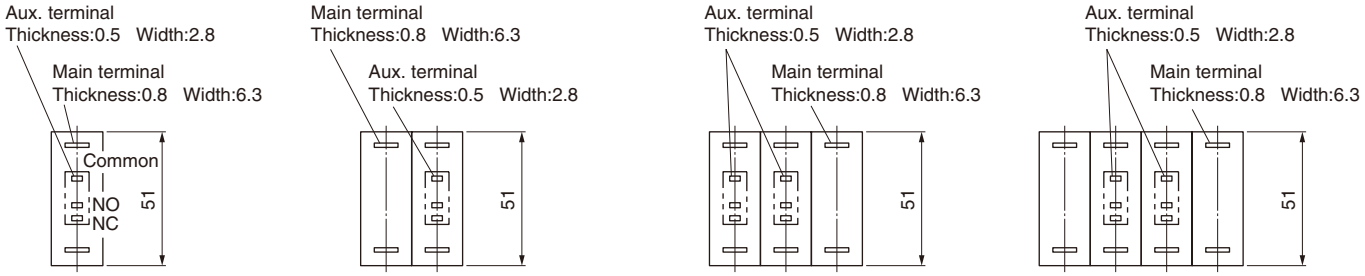

Circuit Protectors
CP31E, 32E, 33E, 34E, 31V, 32V, 33V, 34V

■ **Characteristic curves**

AC circuit
Long time dealy (S)

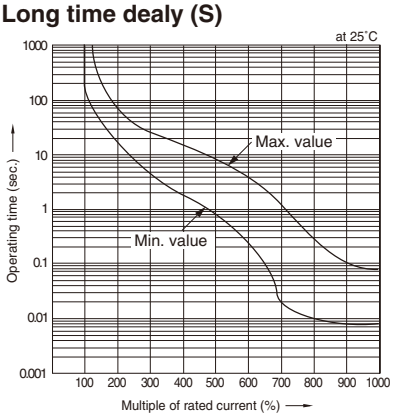

Medium time delay (M)

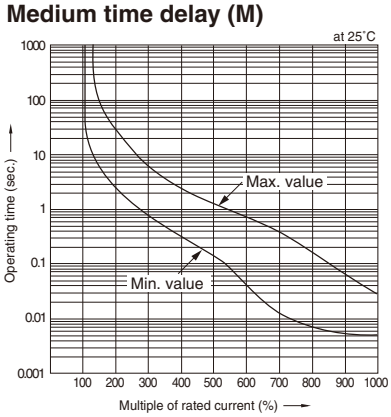

Short time delay (F)

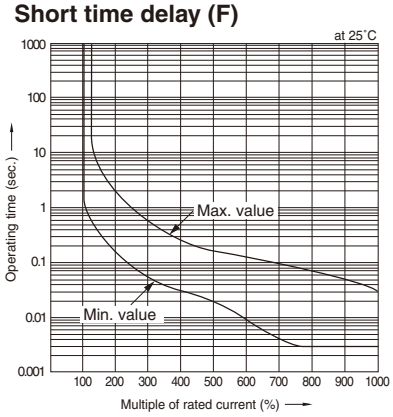

AC circuit
Instantaneous (I)

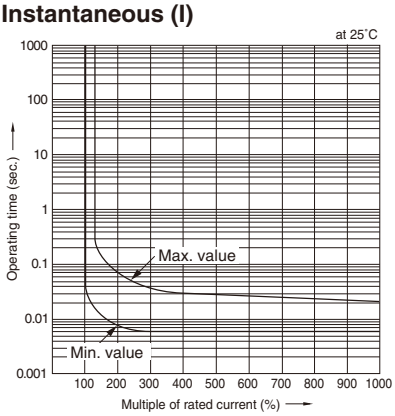

DC circuit
Long time delay

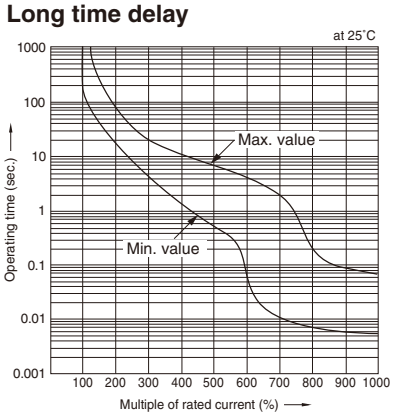

Medium time delay (M)

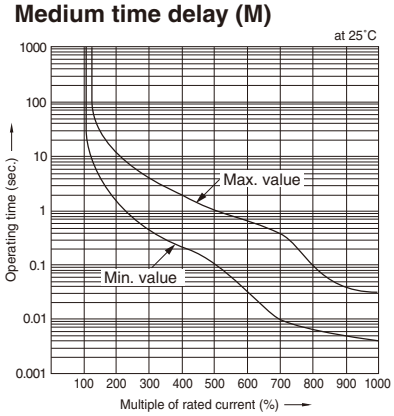

DC circuit
Short time delay (F)

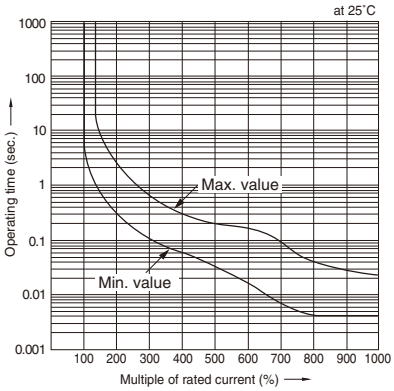

Instantaneous (I)

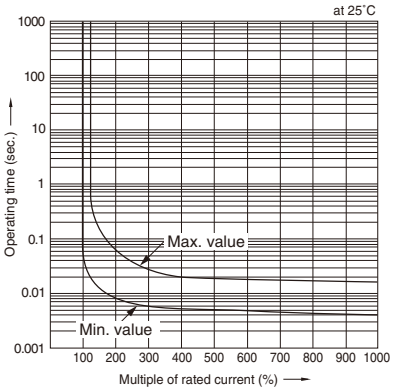

Ambient temperature compensation

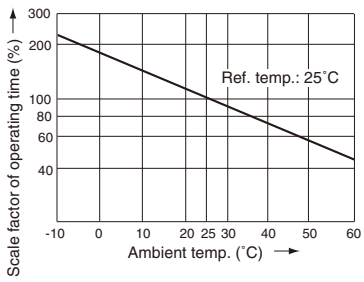

■ **Description**
FUJI low voltage current-limiting fuses are designed to give protection to power supply and distribution circuits and equipment such as motor starter and semiconductors.
Since they can be supplied in a variety of types and ratings any circuit capacities can be accurately matched.
FUJI current-limiting fuses have a high interrupting capacity and will prevent thermal and mechanical damage from heavy short circuits.

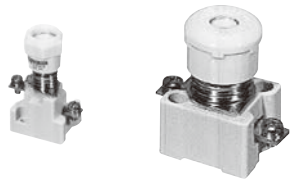

AF97-635,634

AFaC and BaC type current-limiting fuses
These fuses have a high interrupting capacity of 100kA at 600V AC or DC and are suitable for power and control circuits. The fuse is a plug-in type, and it can easily be replaced by removing a screw cap.
■ **Rated current:** 3 – 400 Amps
For further information see page B2-28.

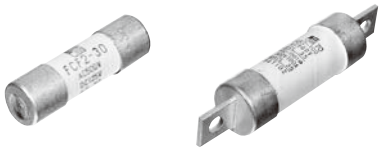

AF97-642

FCF and FCK type current-limiting fuses
These fuses are provided with special links with low-temperature melting characteristics, and are suitable for general power circuits because of their high interrupting capacity and good current-limiting performance.
They are available in two types, a center-blade type and a solid ferrule type, with an insulated fuse body of high quality porcelain.
■ **Rated current:** 1 – 600 Amps
For further information see page B2-31.

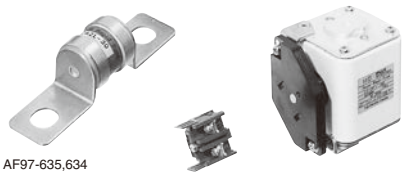

AF97-635,634

BLC, CR and CS type Super Rapid Fuses
These fuses are used exclusively for the protection of semiconductors, thyristors and silicon diodes. Since their total clearing I^2t is very small protective coordination with semi-conductors is very easily carried out.
■ **Rated current:**
BLC type: 12 – 140 Amps
CR type: 30 – 600 Amps
CS type: 40 – 4700 Amps
For further information see page B2-33.

■ **Quick selection table** (CS fuse: Typical value)

Series	Voltage	Interrupting capacity rms sym (kA) (20 / 35 / 50 / 100 / 200)	Application
AFaC	600V AC DC	3 to 100 Amps	General use
BaC		125 to 200 Amps	
		250 to 400 Amps	
FCF	500V AC	1 to 60 Amps	General use
FCK	500V AC	3 to 600 Amps	
BLC	550V AC	12 to 140 Amps	Semi-conductor protection
CR2L(S)	250V AC	10 to 600 Amps	
CR6L	600V AC	20 to 600 Amps	
CS5F	500V AC	40 to 1500 Amps	
CS10F	1000V AC	80 to 1500 Amps	
CS15F	1500V AC	450 to 1250 Amps	

Low Voltage Fuses
Current-limiting fuses AFaC, BaC types

AFaC and BaC type current-limiting fuses

600V AC/DC, 3–400 Amps

■ Description

The AFaC and BaC type have an excellent current-limiting performance with an interrupting capacity as high as 100kA at 600V AC/DC. They are suitable for power circuits and control circuit applications including general power cubicles, distribution equipment, motor starters, load centers and control centers. The fuse assembly comprises base, screw cap, fuse link and adapter ring. The universal surface mounting terminals are provided with screws while the rear connection type are supplied with stud bolts. The fuse link can easily and safely be replaced by simply removing a screw cap.

The diameter of the solid ferrule fuse link varies according to the rated current. The higher the rating, the greater the diameter.

As a safety feature the screw cap can only be tightened when the fuse link matches with the adapter ring located inside the base. This prevents the cap from being tightened even when fuse link with larger ratings is inserted. The operating blown indication tip can be observed through the screw cap window. The tip color indicates the current rating – for instance, pink indicates 3A and red 10A. The tip is ejected to show that the fuse has blown. Both the base and the screw cap are made from a high class porcelain insulating material to ensure trouble-free operation. The fuse can be replaced without isolating the circuit. Since the fuse link is housed in a highly reliable porcelain barrel it is strong mechanically and thermally with no danger of explosion or production of noxious gases when blown.

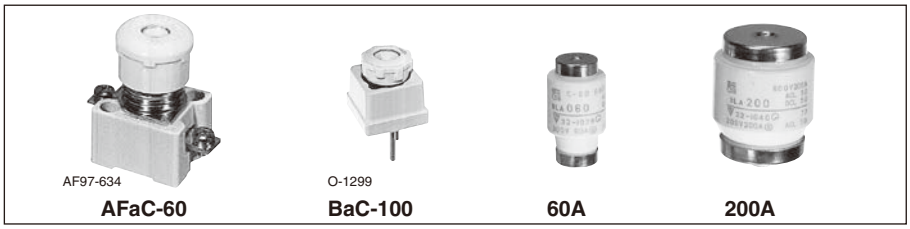

Rear connection type

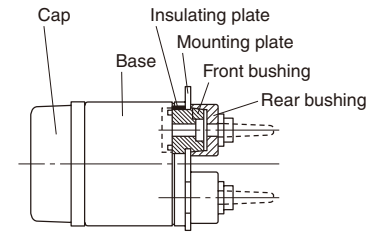

Thickness of mounting plate: 3.2mm or less

Surface connection type

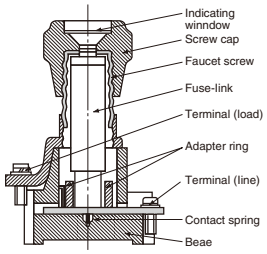

■ Components of AFaC and BaC type

Parts	FA776		SD-39	SD-39	SDO 0091M	SD-63	
Rated current (A)	Fuse-link Type	Color of indicator	Screw cap Type	Base Surface connection Type	Rear connection Type	Adapter ring Type	Color of adapter ring
3	**BLA003**	Pink	**Pa30**	**AFa30**	**Ba30**	**R3**	Pink
5	**BLA005**	Brown				**R5**	Brown
10	**BLA010**	Red				**R10**	Red
15	**BLA015**	Gray				**R15**	Gray
20	**BLA020**	Blue				**R20**	Blue
30	**BLA030**	Violet				**—**	—
40	**BLA040**	Black	**Pa60**	**AFa60**	**Ba60**	**R40**	Black
60	**BLA060**	Light red				**—**	—
75	**BLA075**	Silver	**Pa100**	**AFa100**	**Ba100**	**R75**	Silver
100	**BLA100**	Red				**—**	—
125	**BLA125**	Yellow	**Pa200**	**AFa200**	**Ba200**	**R125**	Yellow
150	**BLA150**	Light red				**R150**	Light red
200	**BLA200**	Blue				**—**	—
250	**BLA250**	Green	**Pa400**	**AFa400**	**Ba400**	**R250**	Green
300	**BLA300**	White				**R300**	White
400	**BLA400**	Black				**—**	—

Minimum ordering quantity

• Fuse-link	BLA003 to 030	100 pcs.	• Base	AFa30	Ba30	100 pcs.
	BLA 040, 060	20		AFa60	Ba60	50
	BLA 075 to 200	10		AFa100	Ba100	10
	BLA 250 to 400	5		AFa200	Ba200	5
				AFa400	Ba400	1
• Screw cap	Pa30	100 pcs.	• Adapter ring	R3 to 20, R75		100 pcs.
	Pa60	50		R40, R125 to 300		50
	Pa100	10				
	Pa200	5				
	Pa400	1				

Fuji Electric FA Components & Systems Co., Ltd.
Information subject to change without notice

Low Voltage Fuses
Current-limiting fuses AFaC, BaC types

■ Specifications

Fuse-link Type	Rated current (A)	Rated voltage	Interrupting capacity (kA)	Max. interrupting I^2t (Amp^2 x sec.)
BLA003	3	600V AC	100	28
BLA005	5	DC		110
BLA010	10			500
BLA015	15		100	750
BLA020	20			1.3 $\times 10^3$
BLA030	30			5 $\times 10^3$
BLA040	40		100	9.2 $\times 10^3$
BLA060	60			27 $\times 10^3$
BLA075	75		100	70 $\times 10^3$
BLA100	100			100 $\times 10^3$
BLA125	125		50	290 $\times 10^3$
BLA150	150			390 $\times 10^3$
BLA200	200			500 $\times 10^3$
BLA250	250		20	1800 $\times 10^3$
BLA300	300			2200 $\times 10^3$
BLA400	400			3000 $\times 10^3$

■ Ordering information

Specify the following:
1. Type number

Fuse-link
BLA 003

- **Rated current**
  Ex. 003 : 3 Amps
  075 : 75 Amps
  200 : 200 Amps
- **Fuse-link**

Base
AFa 30

- **Frame size**
  30: For 3 to 30A
  60: For 40, 60A
  100: For 75, 100A
  200: For 125, 150, 200A
  400: For 250, 300, 400A
- **Connection**
  AFa: Surface
  Ba : Rear

Screw cap
Pa 30

- **Frame size**
  30: For 3 to 30A
  60: For 40, 60A
  100: For 75, 100A
  200: For 125, 150, 200A
  400: For 250, 300, 400A
- **Screw cap**

■ Mounting on steel panel

To mount a rear connection base Ba on a steel panel, an insulting plate and some bushings are used. Kits for 30, 60, 100, 200 and 400A base are available. Please specify your base type when ordering.
Two front bushings are used with 100, 200 and 400A base only.
Example: Insulating plate and bushings for Ba30

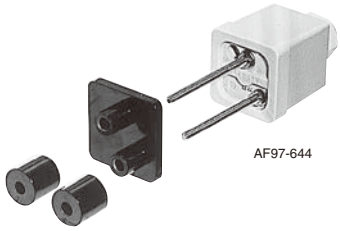
AF97-644

■ Tightening tool

It is recommended that fuses with ratings of over 100A be tightened with a special tool since there is the possibility of overheating if the screw cap is not adequately tightened. This exclusive use tool is sold separately.

Type	Screw cap type
Pa100H	Pa100
Pa200H	Pa200
Pa400H	Pa400

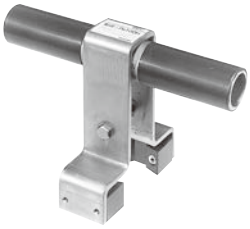
AF90-316

■ Characteristic curves

Melting time-current characteristic

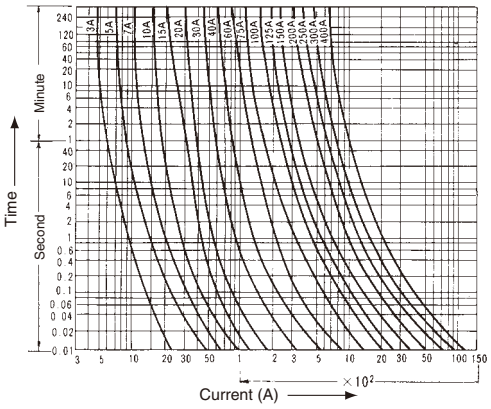

Permissible time-current characteristic

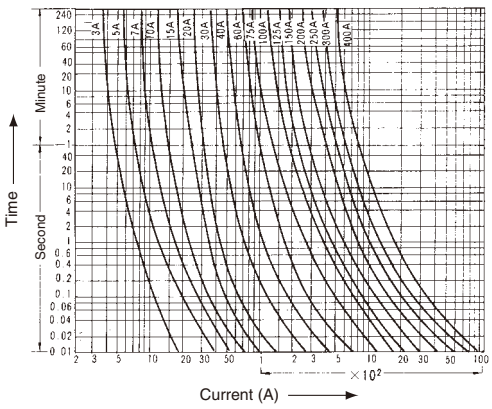

Current-limiting characteristic

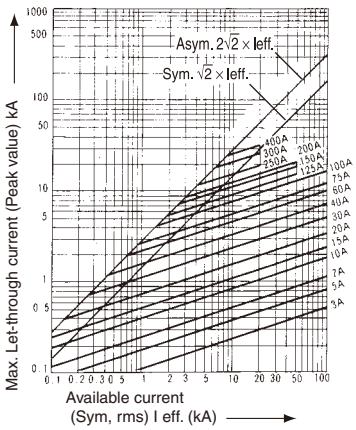

Low Voltage Fuses
Current-limiting fuses AFaC, BaC types

■ **Dimensions, mm**

● **Fuse-link**

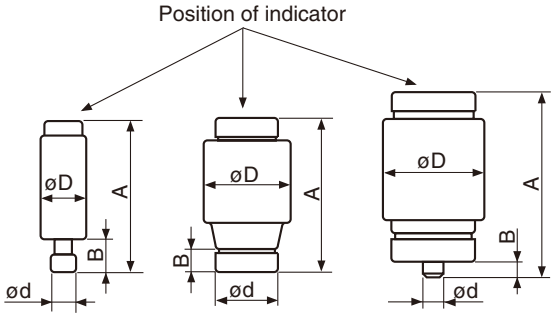

Type	Rated current (A)	A	B	øD	ød	Mass (g)
BLA003	3	50	10	13	8	12
BLA005	5	50	10	13	8	12
BLA010	10	50	10	13	8	12
BLA015	15	50	10	13	10	12
BLA020	20	50	10	13	10	12
BLA030	30	50	10	13	14	12
BLA040	40	50	10	27	16	47
BLA060	60	50	10	27	20	62
BLA075	75	63	5.4	34	5	120
BLA100	100	63	5.4	34	8	120
BLA125	125	63	5.4	47	5	215
BLA150	150	63	5.4	47	8	215
BLA200	200	63	5.4	47	10	215
BLA250	250	63	5.4	61	5	380
BLA300	300	63	5.4	61	8	380
BLA400	400	63	5.4	61	10	380

● **Base and cap**

Surface connection
AFaC-3 to 200

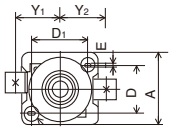

Panel drilling

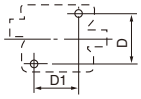

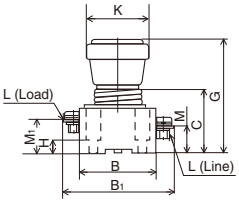

Type	A	B	B1	C (max.)	D	D1	øE	G (max.)	H	K	L	M	M_1	Y_1	Y_2	Mass (g)
AFaC-3 to 30	34	42	55	46.5	24	22	5	78.5	10	32	M5	18	24	22	22	100
AFaC-40 to 60	52	59	82	51	34	38	5.5	88	10	47	M6	21	26	33	33.5	290
AFaC-75 to 100	67	87	125	71	40	64	7	118	28	72	M8	27.5	29.5	50	50	950
AFaC-125 to 200	77	107	150	73	51	82	7	120	28	87	M10	34	35	60	59.5	1465

Rear connection
BaC-3 to 200

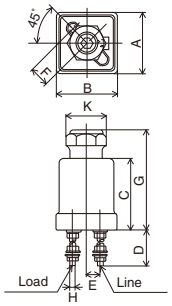

Panel drilling

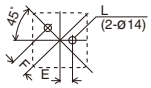

Type	A (max.)	B (max.)	C	D	E	F	G (max.)	H	K (max.)	øL	Mass (g)
BaC-3 to 30	47	47	52	62	10	14	78.5	M5	32	6(14)	220
BaC-40 to 60	66	66	54	65	18	22.5	87.5	M6	47	7(14)	470
BaC-75 to 100	85.5	85.5	71	70	22	30	112.5	M8	72	9(25)	1200
BaC-125 to 200	112	112	78	75	28	39	120	M10	87	11(25)	2115

( ): In the case the steel plate is used.

Surface connection
AFaC-250 to 400
Mass: 4.37kg

Panel drilling

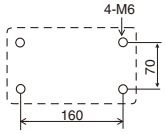

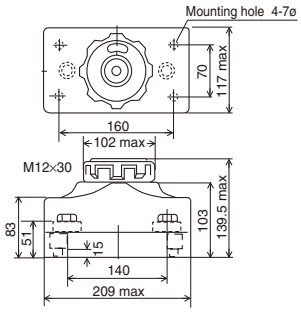

Rear connection
BaC-250 to 400
Mass: 4.76kg

Panel drilling

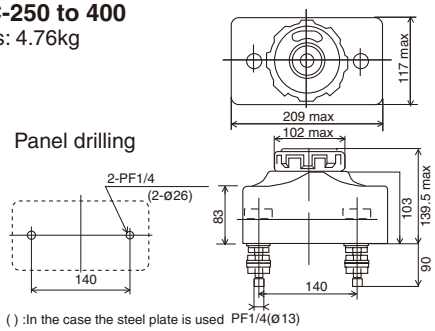

Fuji Electric FA Components & Systems Co., Ltd.
Information subject to change without notice

Low Voltage Fuses
Current-limiting fuses FCF, FCK types

FCF, FCK type current-limiting fuses
500V AC
FCF Up to 60 Amps
FCK Up to 600 Amps

FCF series fuse-link

FCK series fuse-link

Blown fuse indicator

■ Description

FCF and FCK HRC fuses use a specially designed low-temperature melting element, a feature of 'dual element' fuses. There is no fuse deterioration due to overcurrent phenomena such as rush current at the time of motor starting and they also feature time-lag operation characteristics. They operate rapidly and positively in the face of destructive short circuit currents. Since they are current-limiting fuses with a high capacity of 50kA (FCF types: 1 – 60 Amps) they are suitable for many types of power and control circuits. The fuse link is housed in a ceramic barrel with excellent thermal and mechanical characteristics and is packed in silica sand which prevents arcing. Thus there are no fears of explosion or production of noxious gases. The FCF's link end is a solid ferrule-type and available in 1 – 60 Amps ratings. The FCK is a center blade-type and available in 3 – 600 Amps ratings.
The fuse links for the 75 Amps FCK and larger sizes are provided with a blown fuse indicator.

■ Ordering information

Specify the following:
1. Type number

FCF series

Rated current (A)	Interrupting capacity (kA)	Fuse-link Type
1	50	**FCF2-1**
3		**FCF2-3**
5		**FCF2-5**
10		**FCF2-10**
15		**FCF2-15**
20		**FCF2-20**
30		**FCF2-30**
40		**FCF2-40**
50		**FCF2-50**
60		**FCF2-60**

Note: Minimum ordering quantity
Fuse-link: 100 pcs.

FCK series

Rated current (A)	Interrupting capacity (kA)	Fuse-link Type
3	35	**FCK2-3**
5		**FCK2-5**
10		**FCK2-10**
15		**FCK2-15**
20		**FCK2-20**
30		**FCK2-30**
40		**FCK2-40**
50		**FCK2-50**
60		**FCK2-60**
75		**FCK2-75**
100		**FCK2-100**
125		**FCK2-125**
150		**FCK2-150**
200		**FCK2-200**
250		**FCK2-250**
300		**FCK2-300**
400		**FCK2-400**
500		**FCK2-500**
600		**FCK2-600**

Note: Minimum ordering quantity
Fuse-link: 100 pcs.

■ Dimensions, mm

• **Fuse-link**

FCF2-1 to 30

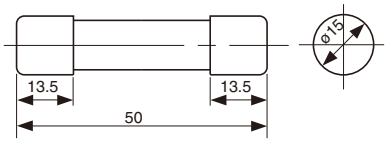

Mass: 20g

FCF2-40 to 60

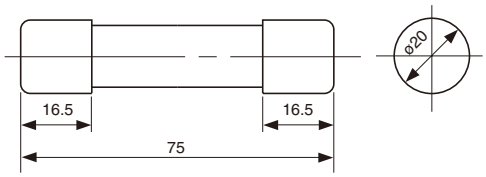

Mass: 80g

• **Fuse-link**

FCK2-3 to 600

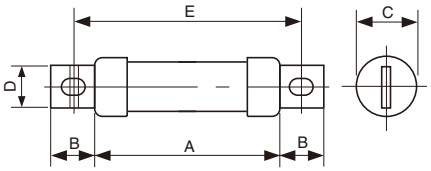

Type	A	B	C	D	E	Mass (g)
FCK2-3 to 30	50	15	ø19.8	13	66.5	35
FCK2-40 to 60	75	19	ø24.9	16	96	95
FCK2-75, 100	95	25	ø31	20	122.5	180
FCK2-125 to 200	110	35	ø45	30	148.5	470
FCK2-250 to 400	120	50	ø63	40	170	1100
FCK2-500, 600	145	60	ø75	50	205	2000

Low Voltage Fuses
Current-limiting fuses FCF, FCK types

■ Characteristic curves

• FCF type

Melting time-current characteristic

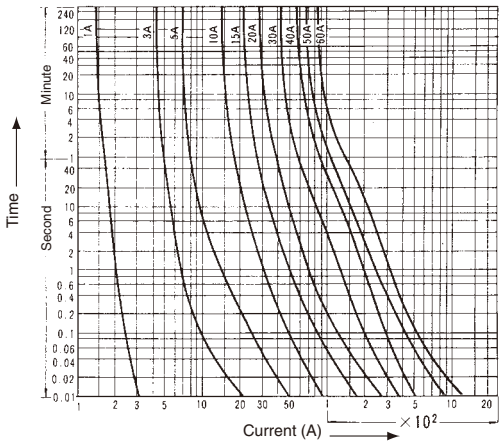

• FCK type

Melting time-current characteristic

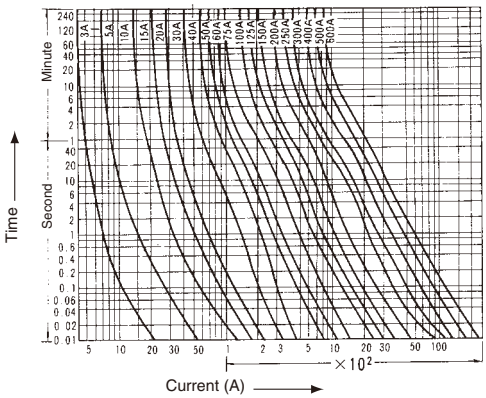

Permissible time-current characteristic

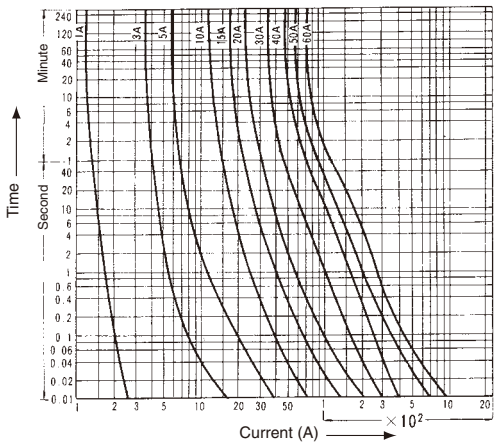

Permissible time-current characteristic

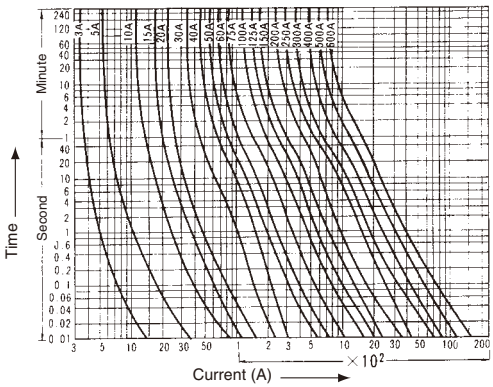

Current limiting characterisitc

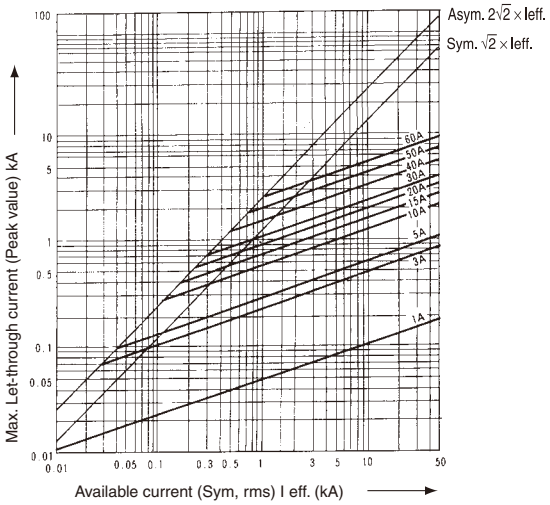

Current limiting characterisitc

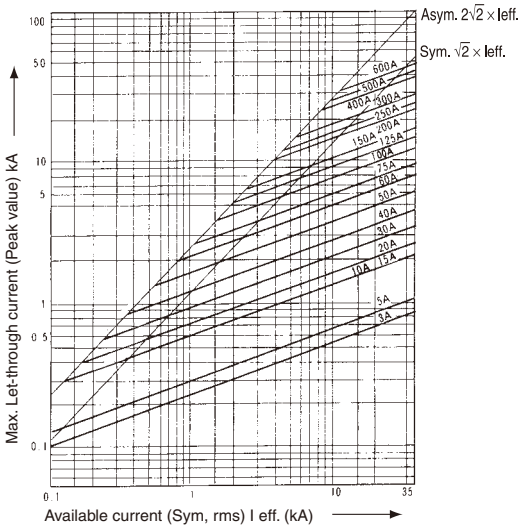

Low Voltage Fuses
Super Rapid Fuses BLC, CR, CS types

BLC, CR and CS types
Super Rapid Fuses
150–1500 Volts AC
10–4700 Amps

SD-36
BLC

SM-388
CR2L

SI-431
CS5F

SI-429
CS10F

■ Description

The FUJI BLC, CR and CS types are extremely reliable fuses which have been specially developed to provide protection for silicon diodes and thyristors and are suitable for inverters using semiconductors or transformers-rectifiers. FUJI Super Rapid Fuses are designed with a very small total I^2t value which gives them a high speed interrupting action in the face of abnormal currents.
In addition the arc voltage generated at the time of interruption has a low value so that faults will not influence related electric machinery and equipment. These fuses can carry out the protection of many types of circuits rating from the semiconductor overcurrents to destructive short-circuiting faults-i.e. when the semiconductors short or circuits fail the sound elements will be quickly isolated from the fault circuits.

■ Features

- The total clearing I^2t is small and the semiconductor circuit is completely protected.
- Since the peak arc voltage at the time of interruption is low damage to other equipment does not occur.
- High interrupting capacity of 200kA at 1000V AC
- The CS type is provided with a blown fuse indicator. An alarm contact block (1NO or 1NC) can also be attached.

■ **UL recognized**: CR2L/UL,CR2LS/UL, CR6L/UL
(File No. E92312)
CSA certificated: CR2LS/UL
(File No. LO4000-4090)
TÜV: CR2LS/UL (10-100A),
CR2L/UL (150-350A)
(Rep. No. E9450643E02)
CR6L/UL (50-300A)
(Rep. No. E9560543E02)

■ Specifications

Rated current (A)	Rated voltage	Peak arc voltage (V)	Max. interrupting I^2t (Amp^2×sec.) × 10^3	Watt loss (W)	Fuse-link Type
12	550V AC	1550	0.09	5.1	**BLC012-1**
20		1550	0.27	8.5	**BLC020-1**
23		1550	0.39	10	**BLC023-1**
45		1380	1.8	19	**BLC045-1**
75		1250	5	32	**BLC075-1**
90		1250	11.5	38	**BLC090-1**
120		1200	33	51	**BLC120-1**
140		1200	100	59	**BLC140-1**
30	250V AC	Max. 500	0.35	4.0	**CR2L-30**
50			0.85	6.0	**CR2L-50**
75			2.3	9.0	**CR2L-75**
100			4.0	12.0	**CR2L-100**
125			6.5	14.0	**CR2L-125**
140			7.0	16.0	**CR2L-140**
150			9.5	18.0	**CR2L-150**
175			13	21.0	**CR2L-175**
200			17	23.0	**CR2L-200**
225			22	26.0	**CR2L-225**
260			27	30.0	**CR2L-260**
300			38	35.0	**CR2L-300**
325			49	37.0	**CR2L-325**
350			60	37.0	**CR2L-350**
400			103	39.0	**CR2L-400**
450			140	46.0	**CR2L-450**
500			160	48.0	**CR2L-500**
550			200	51.0	**CR2L-550**
600			215	56.0	**CR2L-600**

Interrupting capacity
BLC..... 100kA at 550V AC
CR2L .... 100kA at 250V AC

Rated current (A)	Rated voltage	Peak arc voltage (V)	Max. interrupting I^2t (Amp^2×sec.) × 10^3	Watt loss (W)	Fuse-link Type
10	250V AC	Max. 500	0.04	1.2	**CR2LS-10**
20			0.17	3.0	**CR2LS-20**
30			0.35	4.0	**CR2LS-30**
50			0.85	6.0	**CR2LS-50**
75			2.3	9.0	**CR2LS-75**
100			4.0	12.0	**CR2LS-100**
20	600V AC	Max. 1200	0.14	4.0	**CR6L-20**
30			0.35	7.0	**CR6L-30**
50			1.8	9.0	**CR6L-50**
75			3.0	12.5	**CR6L-75**
100			7.0	15	**CR6L-100**
150			18	22.0	**CR6L-150**
200			30	34.0	**CR6L-200**
250			70	37.0	**CR6L-250**
300			95	40.0	**CR6L-300**
350			150	45.0	**CR6L-350**
400			200	55	**CR6L-400**
500			390	60	**CR6L-500**
600			700	70	**CR6L-600**

Interrupting capacity
CR2LS.. 100kA at 250V AC
CR6L .... 100kA at 600V AC

Low Voltage Fuses
Super Rapid Fuses BLC, CR, CS types

■ Specifications

Rated current (A)	Inter-rupting capacity (kA)	Max. interrupting I^2t ($Amp^2 \times sec.$) $\times 10^3$	Watt loss (W)	Fuse-link Type
4700	150 at 125V AC	14000	310	**CS1F-4700**
2000	150 at 250V AC	1950	124	**CS2F-2000**
3000		5500	216	**CS2F-3000**
40	200 at 500V AC	1	6.4	**CS5F-40**
75		3.5	12	**CS5F-75**
100		5	17	**CS5F-100**
150		10	25	**CS5F-150**
200		18.5	34	**CS5F-200**
250		33	42	**CS5F-250**
300		64	45	**CS5F-300**
350		85	56	**CS5F-350**
400		122	57	**CS5F-400**
450		131	62	**CS5F-450**
500		159	73	**CS5F-500**
600		257	80	**CS5F-600**
800		600	114	**CS5F-800**
1000		1200	110	**CS5F-1000**
1000		843	167	**CS5F-1000-P**
1200		1800	114	**CS5F-1200**
1200		1311	200	**CS5F-1200-P**
1500		3600	209	**CS5F-1500**
1000	200 at 800V AC	1800	125	**CS8F-1000**
1200		2500	176	**CS8F-1200**
1500		4400	220	**CS8F-1500**
80	200 at 1000V AC	10	17	**CS10F-80**
100		16	21	**CS10F-100**
150		37	27	**CS10F-150**
200		63	37	**CS10F-200**
250		110	44	**CS10F-250**
300		148	53	**CS10F-300**
350		211	70	**CS10F-350**
400		307	74	**CS10F-400**
500		420	90	**CS10F-500**
560		410	102	**CS10F-560**
630		450	135	**CS10F-630**
750		640	156	**CS10F-750**
800		1259	211	**CS10F-800-P**
1000		1722	245	**CS10F-1000-P**
1250		2250	330	**CS10F-1250-P**
1500		3200	334	**CS10F-1500-C**
450	100 at 1500V AC	350	134	**CS15F-450**
630		760	170	**CS15F-630**
900		1400	280	**CS15F-900-P**
1250		3050	350	**CS15F-1250-P**

Note:
- Peak arc voltage
  CS1F..... Max. 450V
  CS2F..... Max. 750V
  CS5F..... Max. 1000V
  CS8F..... Max. 2000V
  CS10F.... Max. 2000V
  CS15F.... Less than 3000V
- An alarm contact block AHX2905 (1NO) or AHX2915 (1NC) can be attached to CS type. (Sold separately) *See page B2-42.*

Note: UL recognized fuse
In the UL recognized fuses, a fuse with a blown inidcation fuse, or a fuse both with a blown indication fuse and a precision switch is also UL recognized.
Examples: CR2L-200G/UL
CR2LS-30S/UL
CR6L-100G/UL

■ Specifications (UL-recognized, CSA certified, TÜV)

Rated current (A)	Rated voltage	Inter-rupting capacity (kA)	Max. interrupting I^2t ($Amp^2 \times sec.$) $\times 10^3$	Watt loss (W)	Fuse-link Type
10	250V AC 400V DC	10 at AC (pf: 0.8) 10 at DC (L/R: 2ms)	0.04	1.2	**CR2LS-10/UL**
20			0.17	3.0	**CR2LS-20/UL**
30			0.35	4.0	**CR2LS-30/UL**
50			0.85	6.0	**CR2LS-50/UL**
75			2.3	9.0	**CR2LS-75/UL**
100			4.0	12.0	**CR2LS-100/UL**
150			9.5	18.0	**CR2L-150/UL**
200			17	23.0	**CR2L-200/UL**
260			27	30.0	**CR2L-260/UL**
350			60	37.0	**CR2L-350/UL**
400			103	39.0	**CR2L-400/UL**
450			140	46.0	**CR2L-450/UL**
500			160	48.0	**CR2L-500/UL**
550			200	51.0	**CR2L-550/UL**
600			215	56.0	**CR2L-600/UL**
20	600V AC 680V DC	100 at AC (pf: 0.8) 10 at DC (L/R: 2ms)	0.14	4.0	**CR6L-20/UL**
30			0.35	7.0	**CR6L-30/UL**
50			1.8	9.0	**CR6L-50/UL**
75			3.0	12.5	**CR6L-75/UL**
100			7.0	15.0	**CR6L-100/UL**
150		100 at AC (pf: 0.8) 50 at DC (L/R: 2ms)	18	22.0	**CR6L-150/UL**
200			30	34.0	**CR6L-200/UL**
300			95	40.0	**CR6L-300/UL**

Note:
- Peak arc voltage
  CR2LS, CR2L ..... Max. 500V
  CR6L..... Max. 1200V
- The peak arc voltage is obtained by interruption caused by the listed interrupting current at rated voltage.
- This indcates the values when the conductors specified in UL Standards are connected and rated current apply.
- TÜV: CR2LS, 2L: Up to 350A
  CR6L: 50 to 300A

■ CR type fuse with optional accessory

Fuse with blown indication fuse
CR2L (S)- □ G

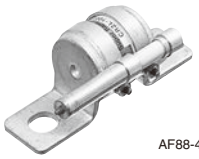

AF88-446

Fuse with blown indication fuse and precision switch
CR2L (S)- □ S

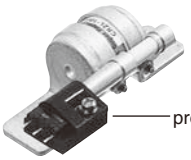

AF88-445

Precision switch (SPDT)
CRX-1

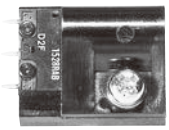

AF88-442

Fuji Electric FA Components & Systems Co., Ltd.
Information subject to change without notice

■ Dimensions, mm

• **BLC**

BLC012, 020, 023 **BLC045** **BLC075 to 140**

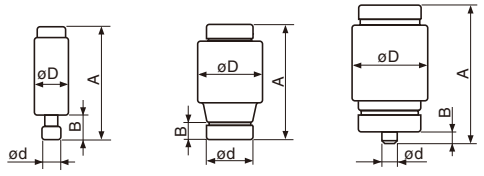

Type	Rated current (A)	A	B	øD	ød	Color of indicator	Mass (g)
BLC012-1	12	50	10	13	10	Grey	12
BLC020-1	20	50	10	13	14	Yellow	12
BLC023-1	23	50	10	13	14	Violet	12
BLC045-1	45	50	10	27	20	White	62
BLC075-1	75	63	6	34	5	Silver	120
BLC090-1	90	63	6	34	8	Red	120
BLC120-1	120	63	6	47	8	Yellow	120
BLC140-1	140	63	6	47	8	Light red	215

Note: The BLC type fuse link requires a holder in use. The size of the holder differs according to the fuse ratings. Select the most suitable one after referring to the Table on *page B2-42*.
For drawings see *page B2-30*.

■ Ordering information

Specify the following:
1. Type number

■ Type number nomenclature

BLC 012-1

Rated current: 12 to 140A
Plug-in type super rapid fuse

CS 10F-1000 □-P/ UL

UL recognized (CR2L, CR2LS, CR6L)
CSA certificated (CR2LS)
TÜV (CR2LS, CR2L, CR6L)

2-fuse connected parallel

Optional accessory
G: With blown indication fuse
S: With blown indication fuse and precision switch

Rated current
10 to 4700A

Rated voltage

2L, 2LS:	250V AC,	6L:	600V AC
1F:	150V AC,	2F:	250V AC
5F:	500V AC,	8F:	800V AC
10F:	1000V AC,	15F:	1500V AC

CR: Barrel-shaped super rapid fuse
CS: Cubic-shaped super rapid fuse

• **CR2L-450 or smaller, CR2LS**

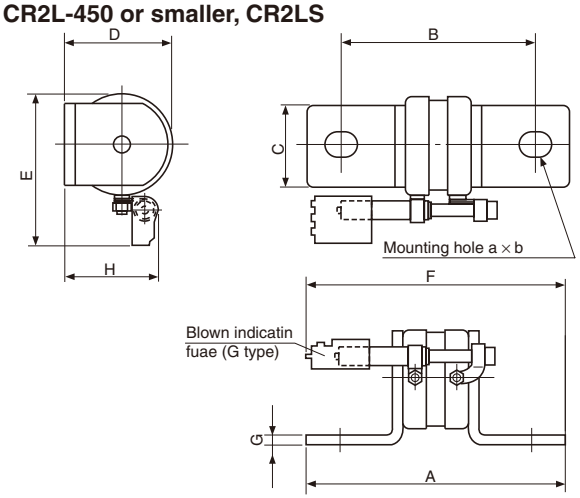

Type	A	B	C	D	E	a×b	F	G	H	Mass
CR2L-30 CR2L-50	80	58	18	21.5	37	9×11	90	1.5	26.5	42g
CR2L-75 CR2L-100 CR2L-125 CR2L-140 CR2L-150 CR2L-175	80	58	20	30.5	44	9×11	90	3	32.5	100g
CR2L-200 CR2L-225 CR2L-260 CR2L-300 CR2L-325	85	60	25	33.5	47	11×13	93	3.2	33.5	130g
CR2L-350 CR2L-400 CR2L-450	95	70	30	42	54	11×13	98	4	39	220g
CR2LS-10 CR2LS-20 CR2LS-30 CR2LS-50 CR2LS-75 CR2LS-100	56	42	12	18.5	34.5	6.5×8.5	78	2	25	28g

• **CR2L-500 to -600**

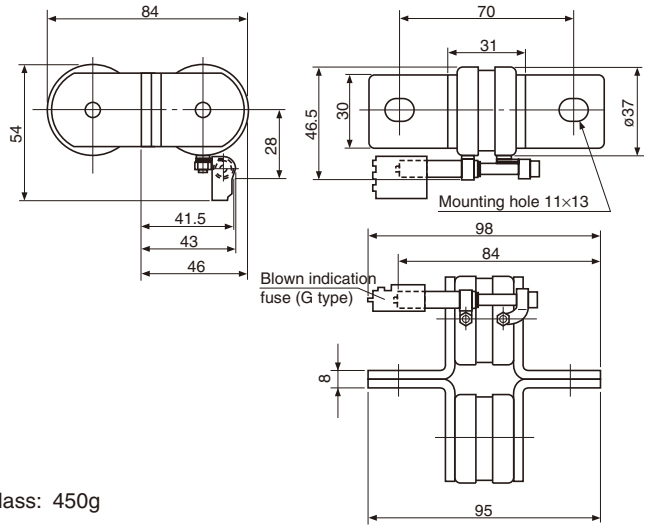

Mass: 450g

Dimensions for reference only. Confirm before construction begins.

Note: The dimensions of the fuses with suffix. UL are the same as those of the standard ones.

Low Voltage Fuses
Super Rapid Fuses BLC, CR, CS types

■ Dimensions, mm

• **CR6L-20, CR6L-30, CR6L-50**

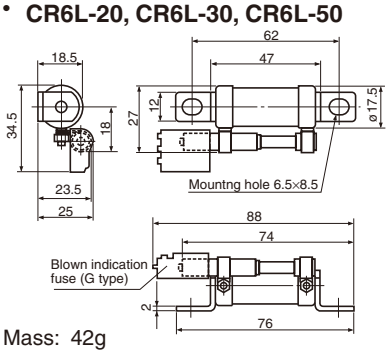

• **CR6L-75 to 300**

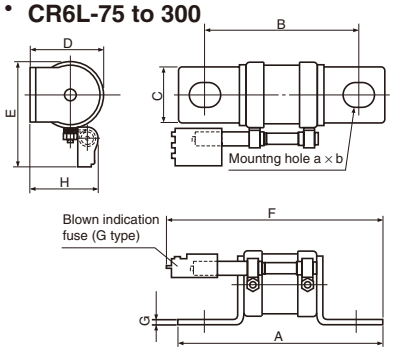

• **CR6L-350 to 600**

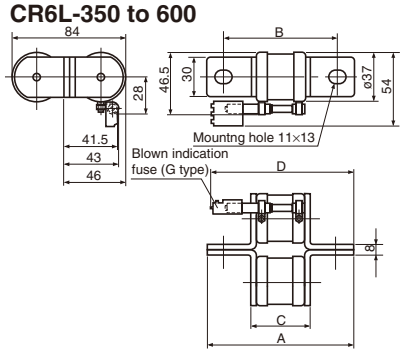

Mass: 42g

Type	A	B	C	D	E	F	G	H	a×b	Mass (g)
CR6L-75 CR6L-100 CR6L-150	95	70	25	34	47	102	3.2	33.5	11×13	150
CR6L-200 CR6L-250 CR6L-300	107	82	30	42	54	107	4	39	11×13	246

Type	A	B	C	D	Mass (g)
CR6L-350	107	82	43	107	493
CR6L-400 CR6L-500	121	96	43	114	522
CR6L-600	121	96	47.4	114	545

• **CS1F-4700**
CS2F-2000, 3000

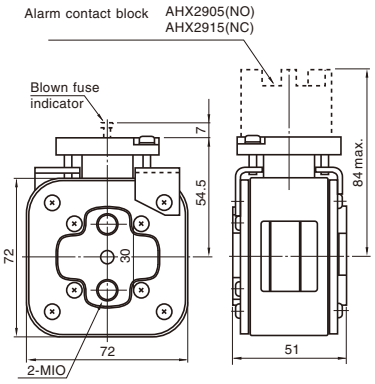

• **CS5F-40 to 1500**
CS10F-80 to 750
CS15F-450, 630

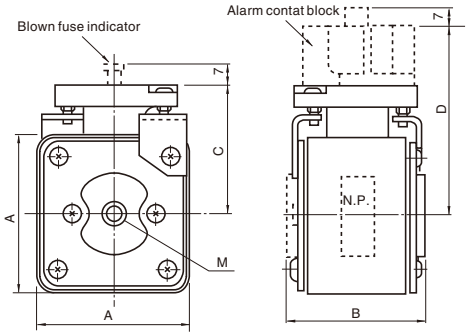

• **CS8F-1000, 1200, 1500**

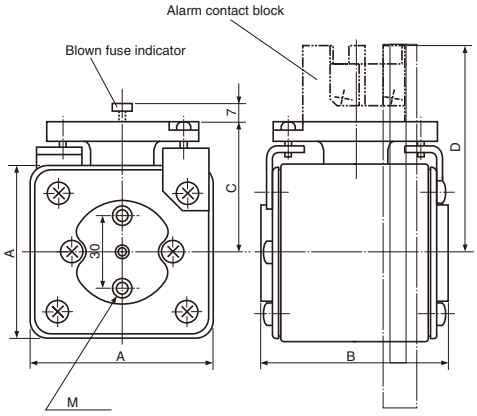

Mass: 800g

Voltage	Type	A	B	C	D (Max.)	M	Mass (g)
500V	CS5F-40 CS5F-75 CS5F-100 CS5F-150 CS5F-200	47	47	42.5	65.5	M8	320
	CS5F-250 CS5F-300 CS5F-350	57	51	47	70	M8	510
	CS5F-400 CS5F-450 CS5F-500 CS5F-600 CS5F-800	72	51	54.5	77	M10	800
	CS5F-1000 CS5F-1200 CS5F-1500	72	51	54.5	77	M12	830

Voltage	Type	A	B	C	D (Max.)	M	Mass (g)
800V	CS8F-1000 CS8F-1200	72	74	54.5	84	M12	1060
	CS8F-1500	72	82	54.5	84	M8	1150
1000V	CS10F-80 CS10F-100	47	71	42.5	65.5	M8	420
	CS10F-150 CS10F-200 CS10F-250	57	74	47	70	M8	690
	CS10F-300 CS10F-350 CS10F-400 CS10F-500 CS10F-630 CS10F-750	72	74	54.5	77	M10	1060
1500V	CS15F-450 CS15F-630	72	105	54.7	77	M10	1400

■ Dimensions, mm

• CS5F-P CS10F-P, CS15F-P

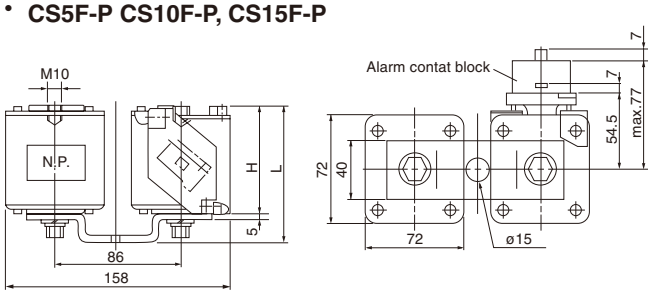

Voltage	Type	H	L	Mass (g)
500V	CS5F-1000-P CS5F-1200-P	51	69	1900
1000V	CS10F-800-P CS10F-1000-P CS10F-1250-P	74	92	2420
1500V	CS15F-900-P CS15F-1250-P	105	123	3100

• CS10F-1500-C

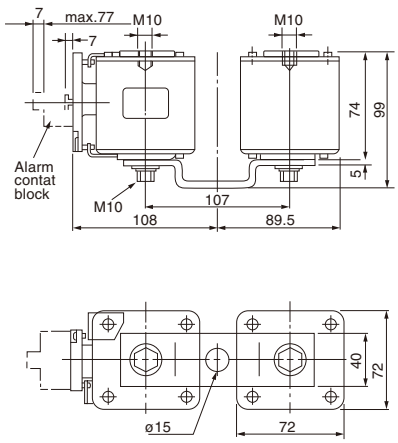

Mass: 2500g

■ Characteristic curves

BLC

Melting time-current characteristic

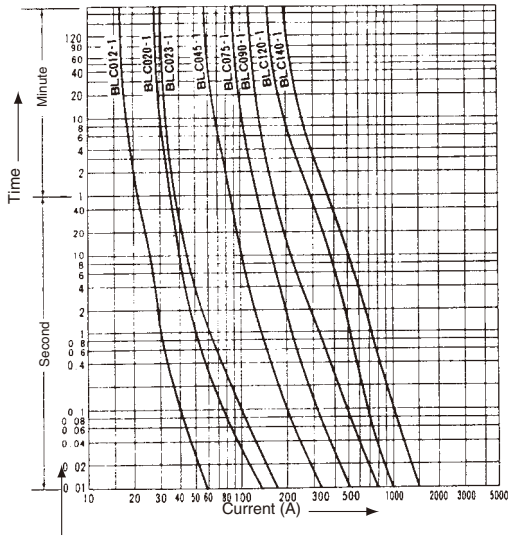

Operating time-current characteristic

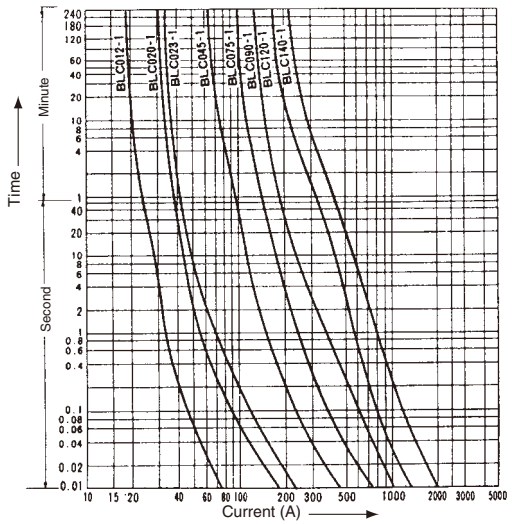

Current-limiting characteristic

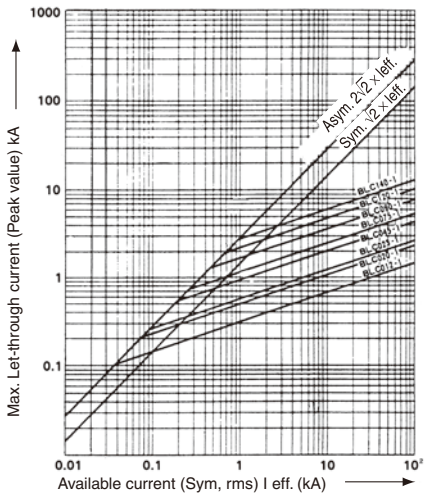

Low Voltage Fuses
Super Rapid Fuses BLC, CR, CS types

■ Characteristic curves

CR2L, CR2LS
Melting time-current characteristic

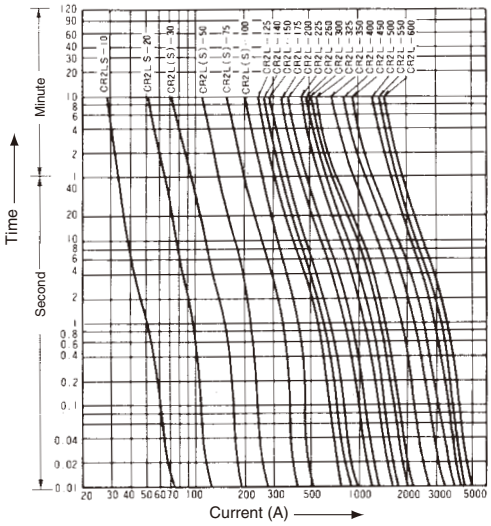

CR6L
Melting time-current characteristic

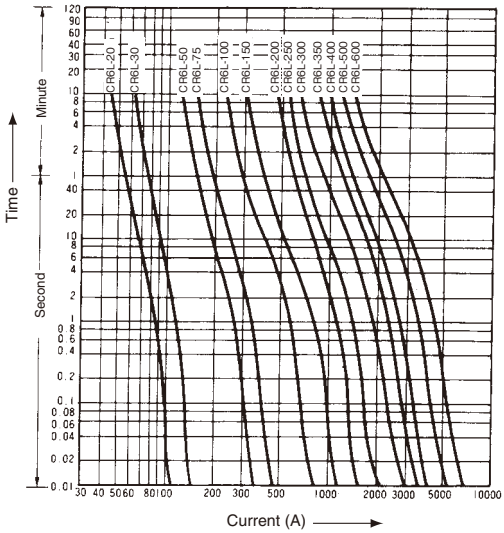

Operating time-current characteristic

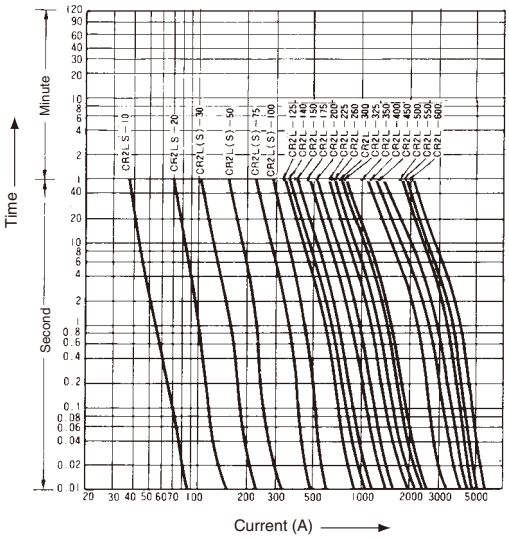

Operating time-current characteristic

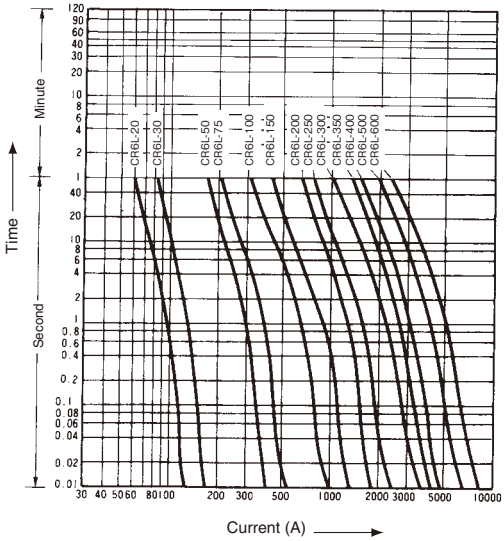

Current-limiting characteristic

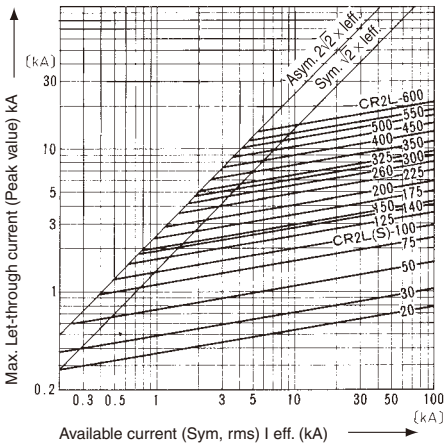

Current-limiting characteristic

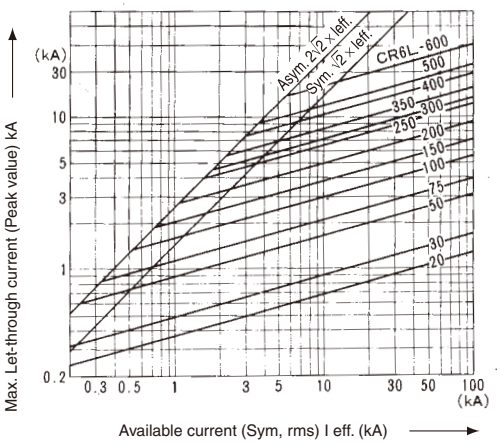

Fuji Electric FA Components & Systems Co., Ltd.
Information subject to change without notice

■ **Characteristic curves**

CS1F

Melting time-current characteristic

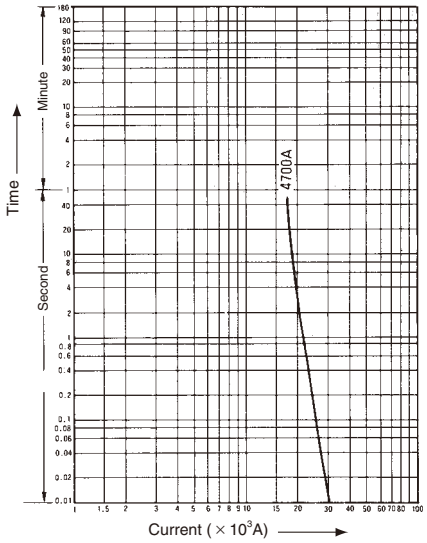

CS2F

Melting time-current characteristic

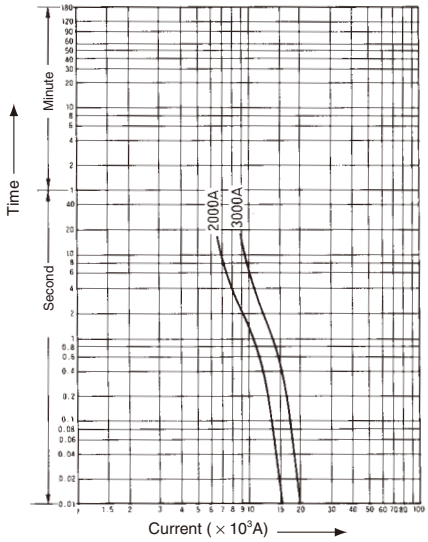

Operating time-current characteristic

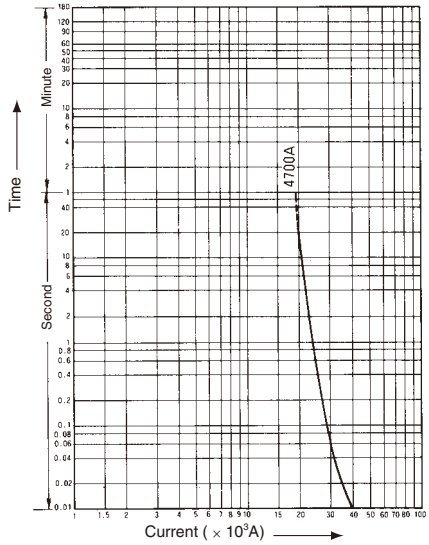

Operating time-current characteristic

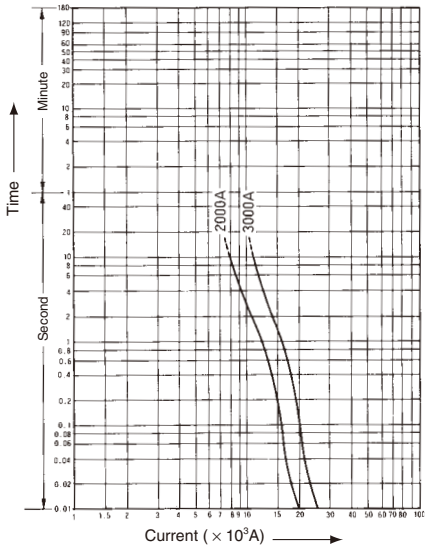

Current-limiting characteristic

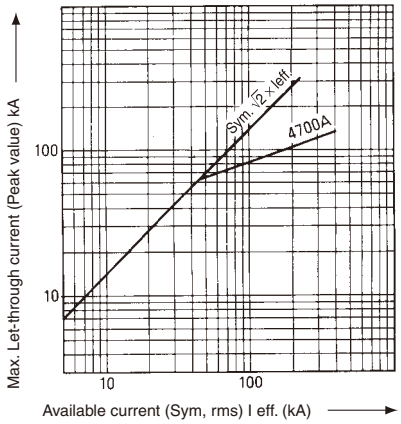

Current-limiting characteristic

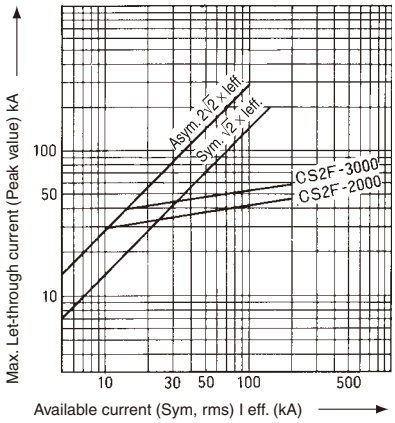

Low Voltage Fuses
Super Rapid Fuses BLC, CR, CS types

■ Characteristic curves

CS5F
Melting time-current characteristic

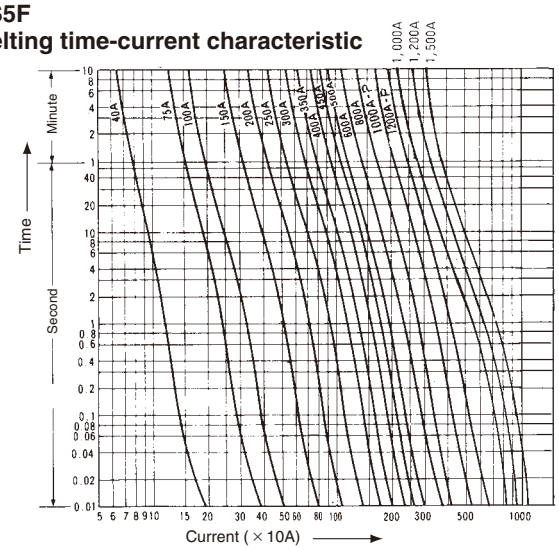

CS8F
Melting time-current characteristic

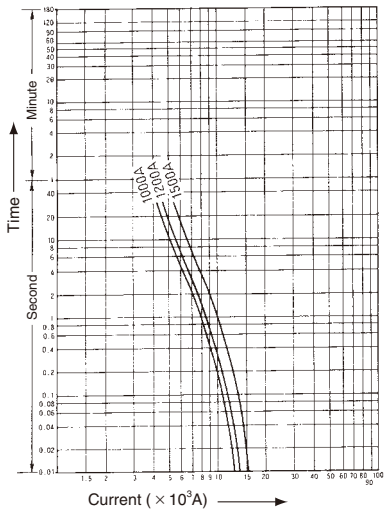

Operating time-current characteristic

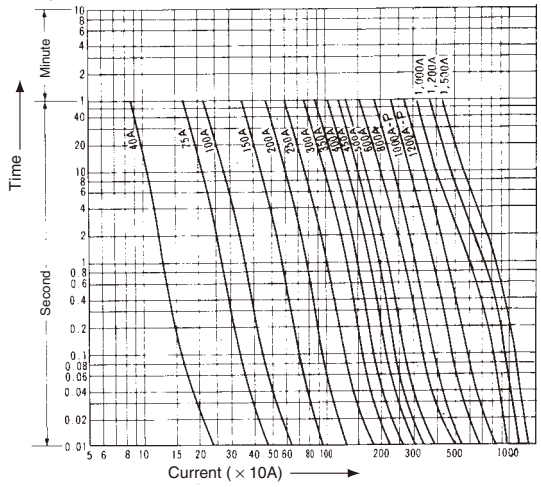

Operating time-current characteristic

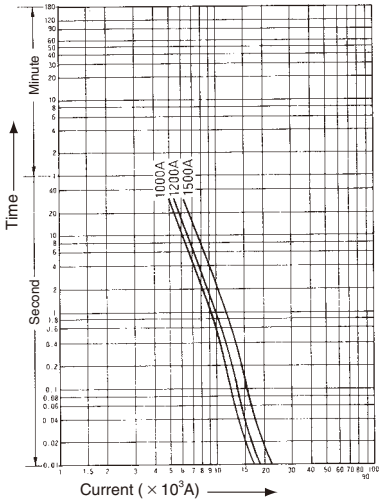

Current-limiting characteristic

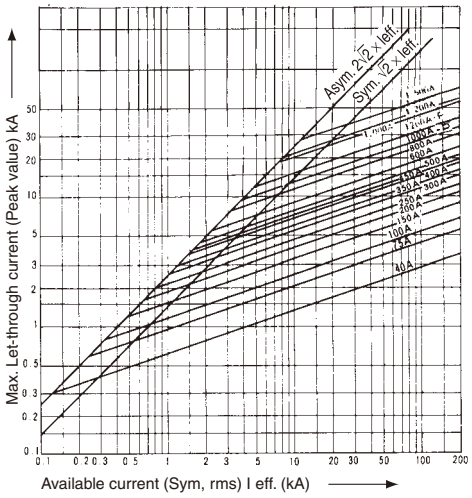

Current-limiting characteristic

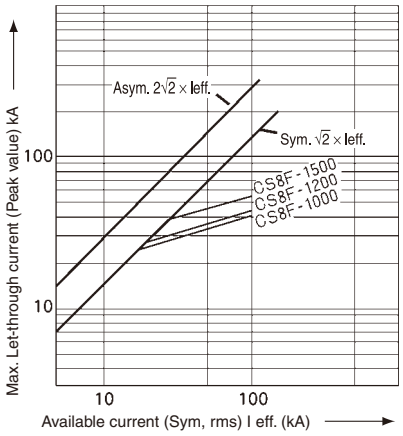

■ **Characteristic curves**

CS10F

Melting time-current characteristic

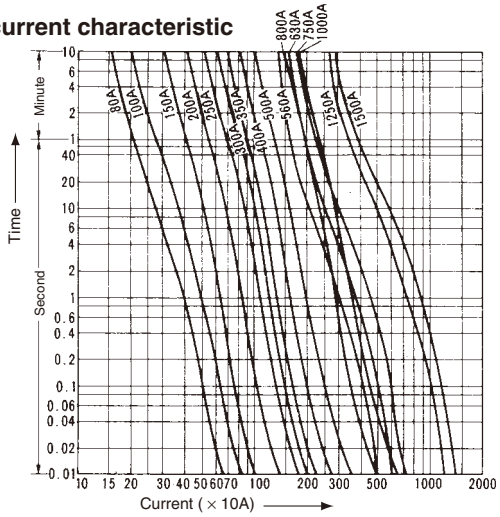

CS15F

Melting time-current characteristic

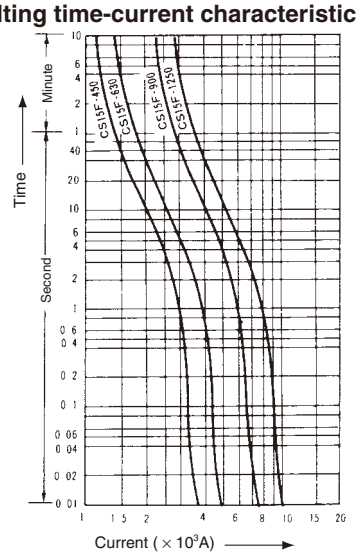

Operating time-current characteristic

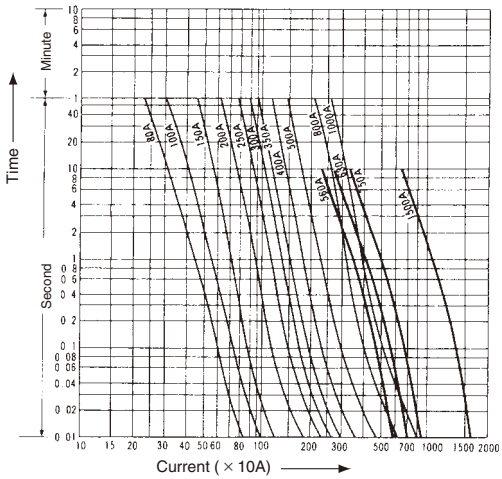

Operating time-current characteristic

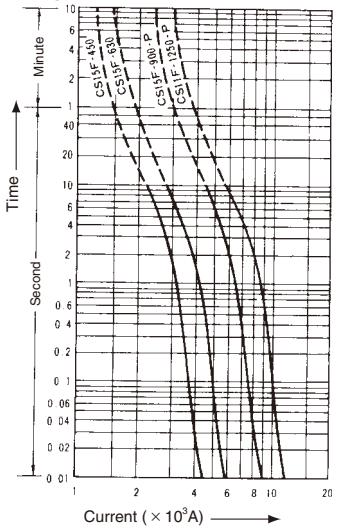

Current-limiting characteristic

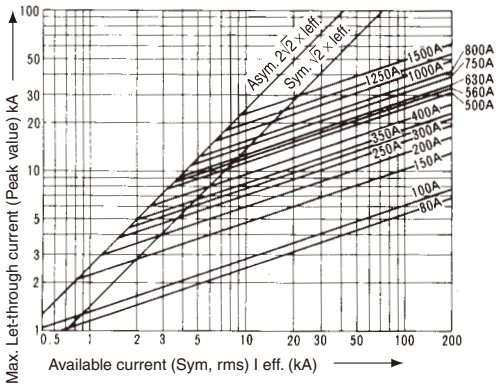

Current-limiting characteristic

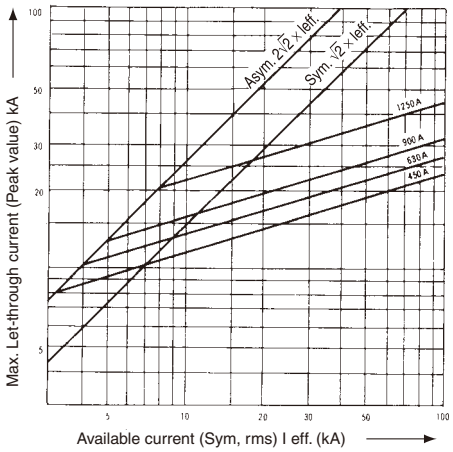

Low Voltage Fuses
Super Rapid Fuses BLC, CR, CS types

■ Operating indication

• Blown fuse indication

FUJI Super Rapid Fuses are available in BLC, CR and CS types. These types have different methods of indicating a blown fuse.

• BLC type

A blown fuse is indicated by the color tip on the ferrule of the fuse being ejected as shown in Fig. 1. This can be seen through the window of the fuse holder.

• CR type

This fuse does not have a blown indicator but if a trigger fuse is connected as shown in Fig. 2 this will provide the alarm for blown fuse.

• CS type

This fuse is provided with a blown fuse indicator. In this case a pin in the contact pad is ejected after the fuse has been blown. If electrical connections for lamps or alarms are required fit the contact block (1NO or 1NC) to the pad as shown in Fig. 3.

Fig. 1

SD-36

BLC type

Fig. 2

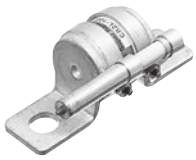

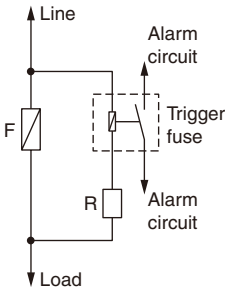

AF88-446

CR type

Fig. 3

Alarm contact block AHX2905, 2915

SM-385

CS10F

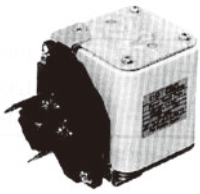

SH-384

CS 10F with alarm contact block

■ Alarm contact block ratings

Type	Contact	Rated voltage (V)	AC		DC			
			Inductive cosϕ=0.3~1		Resistive load		Inductive load	
			Rated operational current (A)	Rated capacity (VA)	Rated operational current (A)	Rated capacity (W)	Rated operational current (A)	Rated capacity (W)
AHX2905	1NO	24	6	150	6	150	6	150
		110	6	660	2.5	275	1.3	140
		220	6	1320	1	220	0.45	100
AHX2915	1NC	440	2.5	1100	0.4	175	0.2	85
		550	2	1100	0.3	165	0.15	85

■ Fuse holder for BLC type fuse

FUJI BLC fuses require special holders. Select the most suitable one which corresponds to the rated current of the fuse.

Dimensions: *See page B2-30*.

SD-36

Fuse link BLC

AF88-439

Fuse holder Surface connection

Fuse link Type	Rated current (A)	Base Surface connection Type	Base Rear connection Type	Screw cap Type	Adaptor ring Type
BLC012-1	12	AFa30	Ba30	Pa30	R20
BLC020-1	20	AFa30	Ba30	Pa30	–
BLC023-1	23	AFa30	Ba30	Pa30	–
BLC045-1	45	AFa60	Ba60	Pa60	–
BLC075-1	75	AFa100	Ba100	Pa100	R75
BLC090-1	90	AFa100	Ba100	Pa100	–
BLC120-1	120	AFa200	Ba200	Pa200	–
BLC140-1	140	AFa200	Ba200	Pa200	–

■ Application and selection guide BLC, CR and CS-type – Super rapid fuse

When selecting fuses for semiconductor rectifier circuit protection the following conditions must be satisfied.
For additional details contact FUJI.

■ Conditions of application

1. The rated interrupting current of the fuse must be greater than the estimated short circuit current of the circuit.

   Available short circuit current of rectifier circuit < Rated interrupting current of fuse

2. The let-thru current value of fuse must be less than the allowable 1/2 cycle surge current value.

   Fuse let-thru current value ≦ Semiconductor – 1/2 cycle allowable surge current 10ms (at 50Hz)

3. The total clearing I^2t value which the fuse requires to complete interruption must be less than the allowable I^2t value of semiconductor.

   Fuse – total clearing I^2t ≦ Semiconductor – I^2t

4. The rated current of the fuse must be greater than the average forward current of the semiconductor.

   Fuse – rated current > Semiconductor – average forward current

5. The rated current and voltage of the fuse must be greater than those of the rectifier circuit.

   Fuse – rated current and voltage > Rectifier circuit – current and voltage

Method of application

Semiconductor rectifier equipment has a variety of rectifier circuits. Taking the 3-phase bridge rectifier circuit as an example – Fig. (a) and (b) as shown in the following.
Although the number of fuses used in the line fuse method (a) is half the number used in the element fuse method (b), the fuses must have a larger current capacity.

Fig. (a)

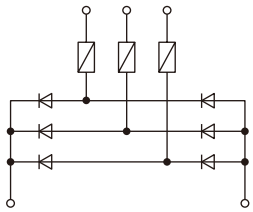

Line fuse method
In this method the fuses are connected to the AC line side.

Fig. (b)

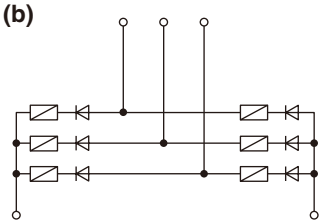

Element fuse method
In this method the fuses are connected in series to the semiconductor element.

■ Fuse ratings

When selecting fuses various factors such as protection, coordination and load, etc. must be considered. However, in this catalog the main matters such as voltage, current and I^2t only are explained.

• Rated voltage

The rated voltage of the fuse indicates the maximum operational voltage and this also indicates the root-mean-square value of the AC sinusoidal wave voltage. Select fuses having a rated voltage exceeding the voltage obtained by the formula shown in the following table. (Fig. 1)
Do not select current-limiting fuses with rated voltages drastically exceeding the rectifier circuit voltage. It is necessary to consider the arc voltage.

Fig. 1 Rated voltage required by fuses

Wire connection type	Wiring diagram	Rated voltage of Fuse (V_{FN} rms) For line fuse	For element fuse
Single-phase bridge	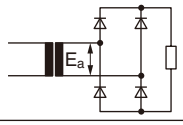	$V_{FN} \geqq a \cdot E_a$	$V_{FN} \geqq a \cdot E_a$
3-phase bridge	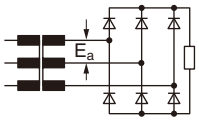	$V_{FN} \geqq a \cdot E_a$	$V_{FN} \geqq a \cdot E_a$
3-phase, double star	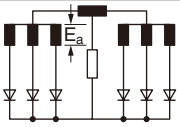	$V_{FN} \geqq a \cdot \sqrt{3} \cdot E_a$	$V_{FN} \geqq a \cdot \sqrt{3} \cdot E_a$

Remarks: The 'a' is a coefficient where the regulation of the AC input voltage is taken into account. This is a=1.1 in case of voltage regulation ±10%.

Fig. 2 Element current and line current

Wire connection type	Wiring diagram	Element fuse method Element current I_a	Line fuse method Line current I_ℓ
Single-phase bridge	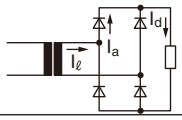	$I_a = \frac{I_d}{\sqrt{2}} = 0.707d$	$I_\ell = d$
3-phase bridge	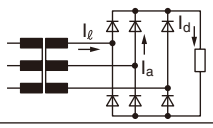	$I_a = \frac{I_d}{\sqrt{3}} = 0.577dI$	$I_\ell = \sqrt{\frac{2}{3}}\, I_d = 0.816dI$
3-phase, double star	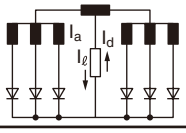	$I_\ell = I_a = \frac{I_d}{2\sqrt{3}} = 0.289dI$	

Low Voltage Fuses
Super Rapid Fuses BLC, CR, CS types

• **Rated current**
The current values in fuses in the line fuse system and the element fuse system are different. Obtain the correct current value from the table on *page B2-43* (Fig. 2).
When selecting the rated current of a fuse choose a fuse having an amperage rating greater than the current which flows in the semi-conductor if the load is continuous and a fixed current.
If the current which flows in the semiconductor is greater than the rated current of the fuse connect the fuses in parallel. However, in this case, if the numbers of fuses arranged in parallel are 'n', then the I^2t value of the fuse will be $n^2 \cdot I^2t$ and n^2 times the I^2t value of one fuse. This should be taken into consideration when protective coordination is taken into account.
In the case of the circuit where the load rapidly varies the fuse element will suffer from mechanical deterioration and be damaged by thermal stress.
In loads of this type the deterioration characteristics of the fuse must be closely considered.
Moreover if the fuse current – time characteristics of the fuse selected is less than the overload characteristics of the semiconductor element then complete protection can be obtained.
However, if the semiconductor element has a large capacity then protective cooperation is very difficult to arrange.
The fuses are used to isolate the shorted semiconductor element circuit from sound operating circuits.

■ **Total clearing I^2t**
The total clearing I^2t of fuse is a very important factor when considering the protective coordination of the semiconductor. This total clearing I^2t is the value where the arcing I^2t is added to the melting I^2t. Therefore it is necessary to satisfy the following formula.

Fuse – total clearing I^2t $\leqq$ Semiconductor I^2t

The total clearing I^2t of fuse depends upon the operational voltage and interrupting current.

Therefore, for this reason if a 500 Volts fuse is used in a 300 Volts circuit the total clearing I^2t is reduced by 50–70%. However, the reduction rate varies according to the type of fuse construction. This must be checked and confirmed once more.

Example
I^2t
All I^2t values are ampere^2 seconds.

The I^2t data for silicon diodes or thyristor elements are normally given in their respective catalogs. If the A^2S data is not given in their catalog obtain the value in the following manner. If protection is needed for a 250V, 150A (I_o) diode having a maximum allowable peak half sine wave current of 2700A, it is important that the fuse has a total I^2t value lower than that of the diode.

Calculation

$$\text{Maximum } I^2t \text{ diode} = \left(\frac{1\ \text{Peak}}{2}\right)^2 0.0167$$
$$= \left(\frac{2700}{2}\right)^2 0.0167$$
$$= 30{,}400A^2 \text{ Sec.}$$

From the table (*Page B2-40*), the fuse with a total I^2t nearest to 30,400A^2 Sec. is the 260 Ampere fuse (CR 2L-260).

■ **Interrupting current**
The rated interrupting current of the fuse must exceed the maximum value (Symmetrical RMS value) of the estimated circuit fault current.

■ **Peak arc voltage**
In the case of the current-limiting fuse an arc voltage (overvoltage) is generated at the time of interruption due to its fusible element construction.
It is necessary to check that this peak arc voltage does not exceed the semiconductor's maximum (Non-repetitive peak) reverse voltage value.

■ **Current limitation**
Select a fuse whose let-thru current value does not exceed the allowable 1/2 cycle surge current of the semiconductor. The allowable surge current is the peak value of the current which in case at 50Hz is allowed to flow for 10ms. In the current-limiting fuse the fault must be cleared in the shortest possible time or in the first 1/2 cycle.
Available current is the current which would flow if the fuse were not current-limiting.
This would cause damage to equipment.
Let-thru current is the actual current allowed to flow by the current limiting action of the fuse. A number of let-thru current graphs are given in this catalog and example is given in the following paragraph. The method of reading this graph is provided for your reference.

How to find a let-thru current – Example
Fuse: 200 Amps 500V
Available R.M.S symmetrical current:
100,000 Amps
Let-thru peak current (Instantaneous):
11,600 Amps
Let-thru R.M.S. current
11,600 ÷ 1.7 = 6,800 Amps
This example clearly shows that while a 100kA (rms, sym) current is available, the fuse limits the current let-thru to 6,800 Amperes (rms, sym).

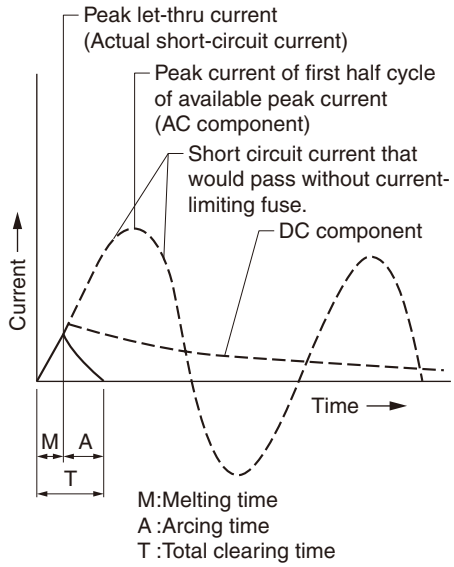

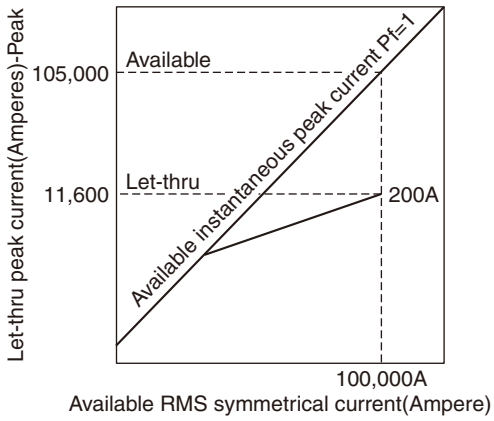

Pushbuttons, Selector Switches, Pilot Lights Rotary Switches, Cam Type Selector Switches Panel Switches, Terminal Blocks, Testing Terminals

			Page
Command Series	AR22 and DR22	General information	C1-1
		Quick reference guide	C1-3
		Type number nomenclature	C1-7
		Ratings and specifications	C1-12
		Pushbuttons, selectors, pilot lights and buzzers	C1-17
		Dimensions	C1-40
		Notes on use	C1-50
	AR30 and DR30	General information	C1-57
		Quick reference guide	C1-58
		Type number nomenclature	C1-62
		Ratings and specifications	C1-67
		Pushbuttons, selectors, pilot lights and buzzers	C1-73
		Dimensions	C1-96
		Notes on use	C1-107
		Accessories for AR22/DR22 and AR30/DR30	C1-112
		Special products	C1-124
		Mass (AR22/DR22 and AR30/DR30)	C1-129
	AR16, DR16 and AF16, DF16	General information	C1-133
		Quick reference guide	C1-134
		Ratings and specifications	C1-140
		Type number nomenclature	C1-143
		Type numbers and dimensions (AR16 and DR16)	C1-147
		Type numbers and dimensions (AF16 and DF16)	C1-159
		Panel cutout and mounting	C1-171
		Notes on use	C1-173
		Accessories	C1-179
		Mass	C1-183
		Integrated contact structure AR16V series	C1-184
	AH164 and AH165	General information	C1-190
		Quick reference guide	C1-191
		Type number nomenclature	C1-195
		Ratings and specifications	C1-197
		Pushbuttons, selectors, pilot lights and buzzers	C1-199
		Mounting space	C1-213
	AH165-2	Type number nomenclature	C1-214
		Ratings and specifications	C1-216
		Pushbuttons, selectors and pilot lights	C1-217
		Mounting space	C1-227
		Notes on use (AH164, AH165 and AH165-2)	C1-228
		Accessories for AH164, AH165 and AH165-2	C1-231
		Mass (AH164, AH165 and AH165-2)	C1-237
Multi Display Lights	AP30F and AP40F	General information	C1-239
		Specifications and performance	C1-242
		Type number nomenclature	C1-244
		Dimensions	C1-246
		Notes on use	C1-249
		Accessories	C1-252
		Window layout sheet	C1-259
Rotary Switches	AC09, AC16 and AC32	Digital code output type	C1-262
Cam Type	RC310	Control selector switches	C1-273
Panel Switches	NS387 and RC310	Instrument switches	C1-280
Terminal Blocks		General information	C1-282
	AYBN	General purpose terminal blocks	C1-283
	AYBS	High quality terminal blocks	C1-285
	LT4D	Channel mounted type terminal blocks with islating switch	C1-286
	LT2E	Rail mounted terminal blocks	C1-289
	Testing Terminal TT	Testing terminals for VT and CT circuits	C1-294
Command Series		CCC approved	C1-295

MINIMUM ORDERS

Orders amounting to **less than ¥10,000** net per order will be charged as ¥10,000 net per order plus freight and other charges.

WEIGHTS AND DIMENSIONS

Weights and dimensions appearing in this catalog are the best information available at the time of going to press. FUJI ELECTRIC FA has a policy of continuous product improvement, and design changes may make this information out of date.
Please confirm such details before planning actual construction.

INFORMATION IN THIS CATALOG IS SUBJECT TO CHANGE WITHOUT NOTICE.

■ Command series

AR22/DR22

KKD05-013a

- 22mm diameter hole
- Mountable even on panel cutout 25mm in diameter.
- Provided with newly developed release arm
- Provided with terminal cover for safety and security
- UL, CSA, TÜV and CCC approved

KKD05-024a

AF98-88

AH164, 165

SK-1103

- 16mm diameter hole, finger-sized button
- Incandescent, neon and LED lamps are available.
- Block type contact
- AH165 series is oil-tight
- UL, CSA, TÜV and CCC approved

SK-1138

AR30/DR30

KKD05-165

- 30mm diameter hole
- Provided with terminal cover for safety and security
- UL, CSA, TÜV and CCC approved

KKD05-169

KKD05-179

AH165-2

AF87-211

- 16mm diameter hole
- AH165-2 series are about twice as large as the AH165 series
- Incandescent, neon and LED lamps are available.
- Block type contact
- AH165-2 series is oil-tight
- UL, CSA, TÜV and CCC approved

AF87-208

AR16/DR16, AF16/DF16

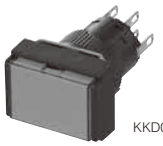
KKD07-157

- 16mm diameter hole, finger-sized button
- Integrated contact structure
- AR16 series is standard type.
- AF16 series is thin type.
- UL, CSA, TÜV and CCC approved

KKD07-171

KKD07-183

C1

AR22 and DR22
General information

The AR22 now uses a release arm with a wedge mechanism developed by Fuji Electric FA. This enables you to mount or remove the operator and contact block without using any tools. When fitting the switch to a panel, you can ignore the panel thickness.
You have only to secure the operator with a locking nut from behind the panel without any need for adjustment. The improved locking nut is capable of mounting the operator in both 22.3mm and 25.5mm dia. panel cutout holes.

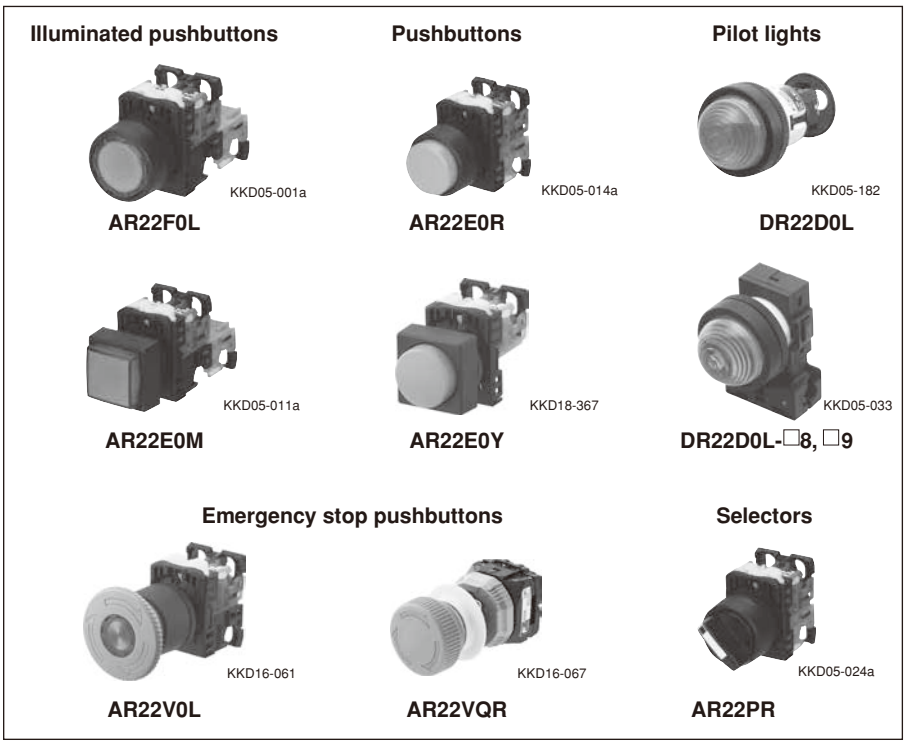

■ Features

Facilitated mounting

- No adjusting of panel thickness is necessary.
- The button and lens can be mounted on a panel while the operator is engaged.
- Mountable even on a panel cutout 25.5mm in diameter.

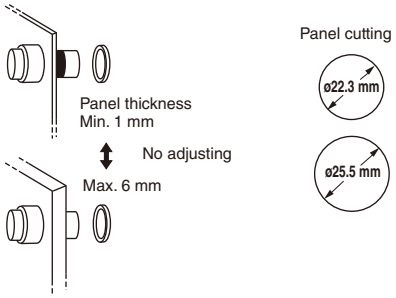

Miniaturization

- Pushbuttons and selector switches with 1NO+1NC: 41mm deep
  Pilot lights: 37mm deep
- The transformer now occupies far less space.

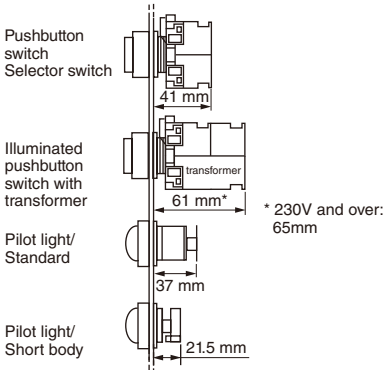

Easy replacing contact block and transformer

- Because of a snap-on mounting, replacement or addition of the contact block and transformer unit is very simple.
- The contact block is common to all the pushbuttons of this series.
- Contact block is easily replaced even when the pushbuttons are mounted closely together.
- Replacement of the contact block can be done with a screwdriver, without the need for any special tool.

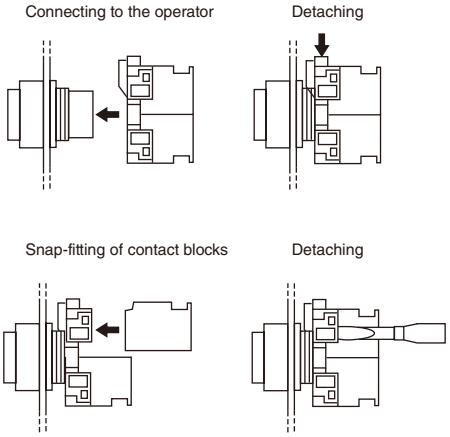

Wiring

- Wiring from two directions is possible.
- Wiring in both vertical and lateral directions facilitates wiring in narrow spaces.
- Color coding of contact blocks makes wiring easy.
  1NO: Blue, 1NC: Red
  Lamp terminal and transformer unit: Black

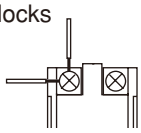

Safety

- A terminal cover is provided, assuring safety and security.
- FUJI's original Trigger Action mechanism is used in the emergency stop pushbuttons. They are suitable for emergency stop and safety. This mechanism prevents the contacts from moving until the button is pushed and locked.
- Reliability of safety functions increased by integrated operator and contact block construction. (AR22VG)

Protection

- Excellent oil-tight construction (IP65) of the operator.
- Closure of the contact block has been improved.

■ Approvals

For further information related to approved type, *see page C1-3 to C1-06.*

■ Illuminated pushbutton switches

Operator	Type	Operator	Type	Operator	Type
Flush round head *See page C1-17, C1-40*	**AR22F0L, F5L** KKD05-001a	Extended with full guard (24mm dia. with openings) *See page C1-17, C1-40*	**AR22G2L, G7L** KKD18-376	Flush round head with square bezel *See page C1-18, C1-40*	**AR22F0P, F5P** KKD18-371
Extended round head *See page C1-17, C1-40*	**AR22E0L, E5L** KKD05-003a	Extended with full guard (24mm dia.) *See page C1-18, C1-40*	**AR22G1L, G6L** KKD18-375	Extended round head with square bezel *See page C1-18, C1-40*	**AR22E0P, E5P** KKD18-366
Mushroom head (40mm dia.) *See page C1-17, C1-40*	**AR22M0L, M5L** KKD05-005a	Push-lock, turn-reset (40mm dia. with white arrow) *See page C1-18, C1-40*	**AR22V5L** KKD06-335	Mushroom head with square bezel (29mm dia.) *See page C1-19, C1-40*	**AR22M4P** KKD18-383
Mushroom head (29mm dia.) *See page C1-17, C1-40*	**AR22M4L, M9L** KKD18-382	Flush square head *See page C1-18, C1-40*	**AR22F0M, F5M** 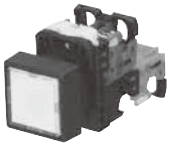 KKD05-009a		
Extended with transparent full guard (24mm dia.) *See page C1-17, C1-40*	**AR22G4L, G9L** KKD05-007a	Extended square head *See page C1-18, C1-40*	**AR22E0M, E5M** 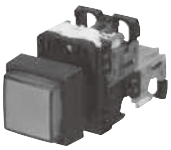 KKD05-011a		

■ Pushbutton switches

Operator	Type	Operator	Type	Operator	Type
Flush round head *See page C1-20, C1-41*	**AR22F0R, F5R** KKD05-013a	Flush round head Symbol mark type *See page C1-20, C1-41*	**AR22FAR, FBR** AF98-193	Mushroom head (40mm dia.) *See page C1-20, C1-41*	**AR22M0R, M5R** KKD05-015a
Extended round head *See page C1-20, C1-41*	**AR22E0R, E5R** KKD05-014a	Extended round head Symbol mark type *See page C1-20, C1-41*	**AR22EAR, EBR** AF98-192	Mushroom head (29mm dia.) *See page C1-20, C1-41*	**AR22M4R, M9R** KKD05-016a

Note : *See page C1-295*

AR22 and DR22
Quick reference guide

■ Pushbutton switches

Operator	Type	Operator	Type	Operator	Type
Extended with full guard (24mm dia.) *See page C1-20, C1-41*	**AR22G3R, G8R** KKD18-378	Pushbutton with selector ring (2-position) *See page C1-22, C1-41*	**AR22S1R, S2R, S3R, S6R** KKD05-017a	Flush round head with square bezel *See page C1-20, C1-41*	**AR22F0Y, F5Y** KKD18-370
Flush with full guard (24mm dia.) *See page C1-20, C1-41*	**AR22G2R, G7R** AF02-68	Push-lock, turn-reset (40mm dia. with white arrow) *See page C1-20, C1-41*	**AR22V5R** KKD08-042	Extended round head with square bezel *See page C1-21, C1-41*	**AR22E0Y, E5Y** KKD18-367
Extended with half guard *See page C1-20, C1-41*	**AR22G0R, G5R** KKD18-374	Flush square head *See page C1-20, C1-41*	**AR22F0S, F5S** KKD05-018a	Mushroom head with square bezel (29mm dia.) *See page C1-21, C1-41*	**AR22M4Y** KKD18-385
Mushroom head with full guard (40mm dia.) *See page C1-20, C1-41*	**AR22M3R, M8R** KKD18-381	Extended square head *See page C1-20, C1-41*	**AR22E0S, E5S** KKD05-019a		

Note: AR22M8R: Not approved standard

■ Emergency stop pushbutton switches (conform to EN418)

Operator	Type	Operator	Type	Operator	Type
Push-lock, turn-reset (Soft-touch 40mm dia.) *See page C1-23, C1-42*	**AR22V0R** KKD05-020b	Push-lock, turn-reset (29mm dia.) *See page C1-23, C1-42*	**AR22V4R** KKD06-339	Unibody push-lock, turn-reset (Soft-touch 40mm dia.) *See page C1-23, C1-42*	**AR22VGE** KKD16-078
Push-lock, turn-reset (40mm dia.) *See page C1-23, C1-42*	**AR22V2R** KKD05-020b	Key release push-lock, turn-reset (40mm dia.) *See page C1-23, C1-42*	**AR22V7R** KKD09-020	Push-lock, turn-reset (40mm dia. with "EMO" charactor) *See page C1-124*	**AR22V3R-■■RZ286** KKD05-261
Push-lock, turn-reset (Soft-touch 29mm dia.) *See page C1-23, C1-42*	**AR22VSR** KKD16-080	Push-lock, pull-reset (35mm dia.) *See page C1-23, C1-42*	**AR22Q2R** KKD06-334		
Push-lock, turn-reset or pull-reset Mushroom head (40mm dia.) *See page C1-23, C1-42*	**AR22VQR** KKD16-067	Push-lock, turn-reset or pull-reset Giant Mushroom head (65mm dia.) *See page C1-23, C1-42*	**AR22VPR** KKD16-065		

Notes: Provided with the ⊖ (Direct opening action) ((((: *See page C1-295*

■ Emergency stop illuminated pushbutton switches (conform to EN418)

Operator	Type	Operator	Type	Operator	Type
Push-lock, turn-reset (Soft-touch 40mm dia.) *See page C1-23, C1-43*	**AR22V0L** KKD16-061	Push-lock, turn-reset (Soft-touch 40mm dia. transparent in all colors) *See page C1-23, C1-43*	**AR22VDL** KKD06-340	Push-lock, turn-reset (Soft touch 29mm dia.) *See page C1-24, C1-43*	**AR22VSL** KKD16-069
Push-lock, turn-reset (40mm dia.) *See page C1-23, C1-43*	**AR22V2L** KKD06-337	Push-lock, turn-reset (40mm dia. transparent in all colors) *See page C1-24, C1-43*	**AR22VAL** KKD06-340	Unibody push-lock, turn-reset (Soft-touch 40mm dia.) *See page C1-24, C1-43*	**AR22VGF** KKD16-079
Push-lock, turn-reset or pull-reset Mushroom head (40mm dia.) *See page C1-24, C1-43*	**AR22VQL** KKD16-066				

Note: Provided with the (Direct opening action)

■ Selector switches

Operator	Type	Operator	Type	Operator	Type
Knob *See page C1-25, C1-44*	**AR22PR, PCR** KKD05-024a	Key *See page C1-25, C1-44*	**AR22JR, JCR** KKD09-018	Lever with square bezel *See page C1-25, C1-44*	**AR22WY, WCY** KKD18-394
Lever *See page C1-25, C1-44*	**AR22WR, WCR** KKD05-025a	Key (Long durability) *See page C1-25, C1-44*	**AR22JAR** KKD09-015	Cylindrical knob with square bezel *See page C1-25, C1-44*	**AR22RY, RCY** AF94-362
Cylindrical knob *See page C1-25, C1-44*	**AR22RR, RCR** KKD18-392	Knob with square bezel *See page C1-25, C1-44*	**AR22PY, PCY** KKD18-391	Key with square bezel *See page C1-25, C1-44*	**AR22JY, JCY** KKD09-019

■ Illuminated selector switches

Operator	Type	Operator	Type
Knob *See page C1-32, C1-45*	**AR22PL** KKD05-030a	Knob with square bezel *See page C1-32, C1-45*	**AR22PP** KKD18-390

Note : *See page C1-295*

AR22 and DR22
Quick reference guide

■ Pilot lights

Lens	Type	Lens	Type	Lens	Type
Dome *See page C1-34, C1-45*	**DR22D0L** KKD05-182	Flush square *See page C1-34, C1-47*	**DR22F3M** KKD05-178	Extended square *See page C1-34, C1-46*	**DR22E3M** KKD18-402
Extended round *See page C1-34, C1-46*	**DR22E3L** KKD05-180	Flush square (Transparent lens) *See page C1-34, C1-47*	**DR22F4M** KKD18-407	Flush rectangular *See page C1-34, C1-48*	**DR22E3N** AF96-237
Faceted *See page C1-34, C1-46*	**DR22K0L** KKD18-409	Flush square (12mm high frame) *See page C1-34, C1-47*	**DR22F5M** KKD18-408	Extended round with square bezel *See page C1-34, C1-46*	**DR22E3P** KKD18-404

Note: With resistor unit type: Not approved standard

■ Joy stick selector switches

Handle	Type	Handle	Type	Handle	Type
Ball type *See page C1-38, C1-48*	**AR22A0, A5** KKD18-363	Ball type with lock *See page C1-38, C1-48*	**AR22A1, A6** KKD19-002	Rubber cap type *See page C1-38, C1-49*	**AR22A2, A7** KKD18-365

■ Buzzers

Sound	Type	Sound	Type
Electronic sound *See page C1-39, C1-49*	**DR22B5** KKD08-053	Electronic sound (IP54) *See page C1-39, C1-49*	**DR22B8** KKD18-397

Note ⓒⓒⓒ : *See page C1-295*

AR22 and DR22
Type number nomenclature

Illuminated pushbuttons

AR22 E0L – 10 E3 R □
① ② ③ ④ ⑤ ⑥

① Product category
AR22: 22mm-dia. illuminated pushbutton
22mm-dia. emergency stop illuminated pushbutton

② Operator
• Illuminated pushbutton
F0L: Flush round head
F5L: Flush round head (Alternate)
E0L: Extended round head
E5L: Extended round head (Alternate)
M0L: Mushroom head (40mm dia.)
M5L: Mushroom head (40mm dia. alternate)
M4L: Mushroom head (29mm dia.)
M9L: Mushroom head (29mm dia. alternate)
G4L: Extended with transparent full guard (24mm dia.)
G9L: Extended with transparent full guard (24mm dia. alternate)
G2L: Extended with full guard (24mm dia. with openings)
G7L: Extended with full guard (24mm dia. with openings, alternate)
G1L: Extended with full guard (24mm dia.)
G6L: Extended with full guard (24mm dia. alternate)
V5L: Push-lock, turn-reset (40mm dia. with white arrow) *1
F0M: Flush square head
F5M: Flush square head (Alternate)
E0M: Extended square head
E5M: Extended square head (Alternate)
F0P: Flush round head with square bezel
F5P: Flush round head with square bezel (Alternate)
E0P: Extended round head with square bezel
E5P: Extended round head with square bezel (Alternate)
M4P: Mushroom head with square bezel (29mm dia.)
• Emergency stop illuminated pushbutton
V0L: Push-lock, turn-reset (Soft-touch 40mm dia.)
V2L: Push-lock, turn-reset (40mm dia.)
VDL: Push-lock, turn-reset (Soft-touch 40mm dia. transparent in all colors)
VAL: Push-lock, turn-reset (40mm dia. transparent in all colors)
VSL: Push-lock, turn-reset (Soft-touch 29mm dia.)
VGF: Unibody push-lock, turn-reset (Soft-touch 40mm dia.)
VQL: Push-lock, turn reset or pull reset (40mm dia.)

③ Contact arrangement

10: 1NO	30: 3NO
01: 1NC	03: 3NC
11: 1NO+1NC	40: 4NO
20: 2NO	04: 4NC
02: 2NC	50: 5NO
22: 2NO+2NC	05: 5NC

④ Lamp voltage
• Incandescent lamp
54: 5.5V AC/DC, without transformer
C4: 15V AC/DC, without transformer
D4: 20V AC/DC, without transformer
E4: 24V AC/DC, without transformer
H4: 100-110V AC, with transformer
L4: 115-127V AC, with transformer
M4: 200-220V AC, with transformer
Q4: 230-254V AC, with transformer
S4: 350-380V AC, with transformer
T4: 400-440V AC, with transformer
V4: 480V AC, with transformer
W4: 500-550V AC, with transformer
• LED lamp
A3: 6V AC, without transformer
63: 6V DC, without transformer
B3: 12V AC/DC, without transformer
C3: 15V AC/DC, without transformer
E3: 24V AC/DC, without transformer
H3: 100-110V AC, with transformer
L3: 115-127V AC, with transformer
M3: 200-220V AC, with transformer
Q3: 230-254V AC, with transformer
S3: 350-380V AC, with transformer
T3: 400-440V AC, with transformer
V3: 480V AC, with transformer
W3: 500-550V AC, with transformer
• Neon lamp (For AR22VGF)
H1: 110V AC, without transformer
K1: 120V AC, without transformer
M1: 220V AC, without transformer
P1: 240V AC, without transformer

⑤ Color of lens

G: Green	Y: Yellow
R: Red *2	A: Orange
W: White	S: Blue

⑥ Special product
Z9: Resisting water-soluble cutting oils and heat
Z8: With a contact protection cover
Z4: Resisting sulfuration gas
ZB: Meeting IP2X finger-protection standards

Notes: *1 Products with no trigger action mechanism. These products cannot be used as emergency stop switches that comply with EN standards.
*2 Button color of emergency stop illuminated switches are Red only.
• The manufacturing range varies depending on the model. For details, refer to the contents of this catalog.

AR22 and DR22
Type number nomenclature

Pushbuttons

AR22 E0R – 10 R □ □
① ② ③ ④ ⑤ ⑥

① **Product category**
AR22: 22mm-dia. pushbutton
22mm-dia. emergency stop pushbutton

② **Operator**
• Pushbutton switch
F0R: Flush round head
F5R: Flush round head (Alternate)
E0R: Extended round head
E5R: Extended round head (Alternate)
FAR: Flush round head (Symbol mark type)
FBR: Flush round head (Symbol mark type, alternate)
EAR: Extended round head (Symbol mark type)
EBR: Extended round head (Symbol mark type, alternate)
M0R: Mushroom head (40mm dia.)
M5R: Mushroom head (40mm dia. Alternate)
M4R: Mushroom head (29mm dia.)
M9R: Mushroom head (29mm dia. Alternate)
G3R: Extended with full guard (24mm dia.)
G8R: Extended with full guard (24mm dia. Alternate)
G2R: Flush with full guard (24mm dia.)
G7R: Flush with full guard (24mm dia. Alternate)
G0R: Extended with half guard
G5R: Extended with half guard (Alternate)
M3R: Mushroom head with full guard (40mm dia.)
M8R: Mushroom head with full guard (40mm dia. Alternate)
S1R: Push-button with selector ring (2-position)
S2R: Push-button with selector ring (2-position)
S3R: Push-button with selector ring (2-position)
S6R: Push-button with selector ring (2-position)
V5R: Push-lock, turn-reset (40mm dia. with white arrow) *1
F0S: Flush square head
F5S: Flush square head (Alternate)
E0S: Extended square head
E5S: Extended square head (Alternate)
F0Y: Flush round head with square bezel
F5Y: Flush round head with square bezel (Alternate)
E0Y: Extended round head with square bezel
E5Y: Extended round head with square bezel (Alternate)
M4Y: Mushroom head with square bezel (29mm dia.)
• Emergency stop pushbutton switch
V0R: Push-lock, turn-reset (Soft-touch 40mm dia.)
V2R: Push-lock, turn-reset (40mm dia.)
VSR: Push-lock, turn-reset (Soft-touch 29mm dia.)
V4R: Push-lock, turn-reset (29mm dia.)
V7R: Key-release push-lock, turn-reset (40mm dia.)
Q2R: Push-lock, pull-reset (35mm dia.)
VGE: Unibody push-lock, turn-reset (Soft-touch 40mm dia.)
VQR: Push-lock, turn reset or pull reset (40mm dia.)
VPR: Push-lock, turn reset (65mm dia.)

③ **Contact arrangement**

10: 1NO	30: 3NO
01: 1NC	03: 3NC
11: 1NO+1NC	33: 3NO+3NC
20: 2NO	40: 4NO
02: 2NC	04: 4NC
22: 2NO+2NC	50: 5NO
	05: 5NC

④ **Color of button**
G: Green
R: Red*2
B: Black
W: White
T: Green, Red, Black (For AR22F0R)
Y: Yellow
A: Orange
S: Blue
C: Clear (For AR22FAR, FBR, EAR, EBR)

⑤ **Symbol mark (For AR22FAR, FBR, EAR, EBR)**

Symbol mark	○		I		Ⓣ		○	I	Ⓣ
Color of button	White	Black	White	Black	White	Black	Clear		
Color of mark	Red		Green		Green		Black		
Code	01	02	03	04	11	12	02B	04B	12B

⑥ **Special product**
Z9: Resisting water-soluble cutting oils and heat
Z8: With a contact protection cover
Z4: Resisting sulfuration gas
ZB: Meeting IP2X finger-protection standards

Notes: *1 Products with no trigger action mechanism. These products cannot be used as emergency stop switches that comply with EN standards.
*2 Button color of emergency stop switches are Red only.
• The manufacturing range varies depending on the model. For details, refer to the contents of this catalog.

AR22 and DR22
Type number nomenclature

Selector and illuminated selector switches

AR22 PL – 2 □ 10 E3 G □ □
① ② ③ ④ ⑤ ⑥ ⑦ ⑧ ⑨

① **Product category**
AR22: 22mm dia. selector switch and illuminated selector switch

② **Operator**
- Selector switch

PR: Knob
PCR: Knob operated control type
WR: Lever
WCR: Lever operated control type
RR: Cylindrical knob
RCR: Cylindrical knob operated control type
JR: Key
JCR: Key operated control type
JAR: Key (Long durability)
PY: Knob with square bezel
PCY: Knob operated control type with square bezel
WY: Lever with square bezel
WCY: Lever operated control type with square bezel
RY: Cylindrical knob with square bezel
RCY: Cylindrical knob operated control type with square bezel
JY: Key with square bezel
JCY: Key operated control type with square bezel

- Illuminated selector switch

PL: Knob
PP: Knob with square bezel

③ **Operation**
2: 2-position, maintained
0: 2-position, spring return
3: 3-position, maintained
6: 3-position, spring/manual return (Left to center)
7: 3-position, spring/manual return (Right to center)
1: 3-position, spring return
4: 4-position, maintained (For AR22PCR, WCR, RCR)
5: 5-position, maintained (For AR22PCR, WCR, RCR)

④ **Key removable position**
A: Left
B: Left and right
C: Left, right and center
D: Right
E: Center
F: Right and center
G: Left and center

⑤ **Contact arrangement**

10: 1NO	30: 3NO
01: 1NC	03: 3NC
11: 1NO+1NC	33: 3NO+3NC
20: 2NO	40: 4NO
02: 2NC	04: 4NC
22: 2NO+2NC	50: 5NO
	05: 5NC

Note: Control type: *See page C1-29 to C1-31*

⑥ **Lamp voltage**
- Incandescent lamp

54: 5.5V AC/DC, without transformer
C4: 15V AC/DC, without transformer
D4: 20V AC/DC, without transformer
E4: 24V AC/DC, without transformer
H4: 100-110V AC, with transformer
L4: 115-127V AC, with transformer
M4: 200-220V AC, with transformer
Q4: 230-254V AC, with transformer
S4: 350-380V AC, with transformer
T4: 400-440V AC, with transformer
V4: 480V AC, with transformer
W4: 500-550V AC, with transformer

- LED lamp

A3: 6V AC, without transformer
63: 6V DC, without transformer
B3: 12V AC/DC, without transformer
C3: 15V AC/DC, without transformer
E3: 24V AC/DC, without transformer
H3: 100-110V AC, with transformer
L3: 115-127V AC, with transformer
M3: 200-220V AC, with transformer
Q3: 230-254V AC, with transformer
S3: 350-380V AC, with transformer
T3: 400-440V AC, with transformer
V3: 480V AC, with transformer
W3: 500-550V AC, with transformer

⑦ **Color of knob**
B: Black (Not available for illuminated selector switch)
G: Green
R: Red
W: White (Not available for selector switch)
Y: Yellow (Not available for selector switch)
A: Orange (Not available for selector switch)
S: Blue (Not available for selector switch)

⑧ **Key type No.**
A, B, C, D, E or F
("A" is standard)

⑨ **Special product**
Z9: Resisting water-soluble cutting oils and heat
Z8: With a contact protection cover
Z4: Resisting sulfuration gas
ZB: Meeting IP2X finger-protection standards

Note: • The manufacturing range varies depending on the model. For details, refer to the contents of this catalog.

AR22 and DR22
Type number nomenclature

Pilot lights

DR22 D0L – E3 W □
① ② ③ ④ ⑤

① **Product category**
DR22: 22mm dia. pilot light

② **Lens**
D0L: Dome
E3L: Extended round
K0L: Faceted
F3M: Flush square
F4M: Flush square (Transparent lens)
F5M: Flush square (12mm high frame)
E3M: Extended square
E3N: Flush rectangular
E3P: Extended round with square bezel

③ **Lamp voltage**
• Incandescent lamp

54: 5.5V AC/DC, without transformer
C4: 15V AC/DC, without transformer
D4: 20V AC/DC, without transformer
E4: 24V AC/DC, without transformer
H4: 100-110V AC, with transformer
L4: 115-127V AC, with transformer
M4: 200-220V AC, with transformer
Q4: 230-254V AC, with transformer
S4: 350-380V AC, with transformer
T4: 400-440V AC, with transformer
V4: 480V AC, with transformer
W4: 500-550V AC, with transformer

58: 5.5V AC/DC, short-body without transformer
C8: 15V AC/DC, short-body without transformer
D8: 20V AC/DC, short-body without transformer
E8: 24V AC/DC, short-body without transformer
H8: 100-110V AC, short-body with transformer
L8: 115-127V AC, short-body with transformer
M8: 200-220V AC, short-body with transformer

• LED lamp

A3: 6V AC, without transformer
63: 6V DC, without transformer
B3: 12V AC/DC, without transformer
C3: 15V AC/DC, without transformer
E3: 24V AC/DC, without transformer
H3: 100-110V AC, with transformer
L3: 115-127V AC, with transformer
M3: 200-220V AC, with transformer
Q3: 230-254V AC, with transformer
S3: 350-380V AC, with transformer
T3: 400-440V AC, with transformer
V3: 480V AC, with transformer
W3: 500-550V AC, with transformer
H7: 110V DC, with resistor unit

A9: 6V AC, short-body without transformer
69: 6V DC, short-body without transformer
B9: 12V AC/DC, short-body without transformer
C9: 15V AC/DC, short-body without transformer
E9: 24V AC/DC, short-body without transformer
H9: 100-110V AC, short-body with transformer
L9: 115-127V AC, short-body with transformer
M9: 200-220V AC, short-body with transformer

④ **Color of lens**
G: Green
R: Red
W: White
Y: Yellow
A: Orange
S: Blue

⑤ **Special product**
Z9: Resisting water-soluble cutting oils and heat
Z4: Resisting sulfuration gas
ZB: Meeting IP2X finger-protection standards

Note: • The manufacturing range varies depending on the model. For details, refer to the contents of this catalog.

AR22 and DR22
Type number nomenclature

Joy stick selector switches

AR22A 0 N – A0A0 B
① ②③ ④ ⑤

① **Product category**
AR22A: 22mm-dia. Joy stick selector switch

② **Handle**
0: Ball type (without lock, manual return)
1: Ball type with lock (manual return)
2: Rubber cap type (without lock, manual return)
5: Ball type (without lock, spring return)
6: Ball type with lock (spring return)
7: Rubber cap type (without lock, spring return)

③ **Terminal**
N: Screw
H: Solder/tab

④ **Contact arrangement**

Contact arrangement		Blank	1NO	1NC	1NO+1NC	2NO	2NC	2NO+2NC
Code	Screw	0	A	B	1	D	E	–
	Solder/tab	0	–	–	1	–	–	2

Operating direction code of contacts

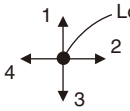

Locked position

1: Upper 2: Right
3: Lower 4: Left

Ex. AR22A0N-A 0 A 0 B
1 2 3 4

⑤ **Handle color**
B: Black

■ Ordering information

Specify the following:
1. Type number
   For the CCC approved product, add the suffix **(CCC)** to the type number

   Example: Pushbutton switch **AR22F0R-11B(CCC)**

Buzzers

DR22B 5 – E B
① ② ③④

① **Product category**
DR22B: 22mm-dia. buzzer

② **Sound**
5: Electronic sound
8: Electronic sound (IP54)

③ **Operating voltage**
6: 6V DC
E: 12-24V AC/DC
H: 100-110V AC
M: 200-220V AC

④ **Color of head**
B: Black

AR22 and DR22
Ratings and specifications

■ Standards approved

UL508	File No. E44592
CSA C22.2 No.14	File No. LR20479 cUL File No. E44592 (For AR22VQ, AR22VG)
TÜV: EN60947-5-1	Pushbutton, Illuminated pushbutton: R9551062, Selector, Illuminated selector: R9551060 Pilot lights: R9551061 Joy stick selector switch: R2050803 (Lever switch) Buzzer: J9950091
TÜV: EN60947-5-1 EN60947-5-5	Emergency stop pushbutton Emergency stop illuminated pushbutton : R50274068 (For AR22VQ) : R50028146, R50028137 (For AR22VG)

■ Specifications (Indoor use)

Description	Pushbutton switch Illuminated pushbutton switch Emergency stop pushbutton switch Emergency stop illuminated pushbutton switch Selector switch Illuminated selector switch	Joy stick selector (Lever switch)	Pilot light
Rated insulation voltage	600V AC/DC *1	250V AC/DC	250V AC/DC *2
Mechanical durability	*See page C1-13*	250,000 operations	–
Electrical durability	500,000 operations at 220V AC 6A 1 million operations at 220V AC 3A (AR22VQ, AR22VG type: 100,000 operations)	100,000 operations at 220V AC 1A (Res. load)	–
Operating frequency	1200 operations/hour (On-load factor: 40%) AR22VQ type: 900 oerations/hour (On-load factor: 40%) AR22VG type: 1800 operations/hour (On-load factor: 40%)		–
Dielectric strength	2500V AC, 1 minute *3 AR22VQ type: 2000V AC, 1 minute	2000V AC, 1 minute *4	
Insulation resistance	100MΩ or more (500V DC megger)		
Rated impulse dielectric strength	6kV (AR22VG type: 4kV, AR22VQ type: 2.5kV)	–	6kV
Conditional short-circuit current	1000A	1000A	–
Short-circuit protective device	Fuse 15A (AR22VQ type: gG10A)	Fuse 1A	–
Pollution degree	3		
Vibration	Resonance: 10 to 55Hz, double amplitude 0.1mm *5 Constant: 16.7Hz, double amplitude 3mm		
Shock	Malfunction durability: 100m/s^2 *6 Mechanical durability: 500m/s^2		Mechanical durability : 500m/s^2
Ambient temperature (No condensation or no icing)	-20 to +70°C *7	-5 to +70°C	-20 to +50°C
Storage temperature	-40 to +80°C		
Humidity	45 to 85% RH (within -5 to +40°C)		
Degree of protection	IP65		

Notes: *1 Illuminated type without transformer and AR22VG type, AR22VQ type: 250V AC/DC
*2 Pilot light with transformer: 600V AC
*3 Illuminated type without transformer: 2000V AC, 1 minute (except AR22VGF type)
*4 Pilot light with transformer: 2500V AC, 1 minute
*5 Emergency stop type: 10 to 500Hz, double amplitude 0.7mm (acceleration 50m/s^2), according to the test condition of EN60947-5-5 (1997)
*6 Emergency stop type: 150m/s^2
*7 AR22VGE type, AR22VQ type: -20 to +60°C, illuminated type: -20 to +50°C

● Mechanical durability

Description		Operations
Pushbutton switch Illuminated pushbutton switch Emergency stop pushbutton switch Emergency stop illuminated pushbutton	Momentary action Alternate action With selector ring Push-lock, turn-reset Push-lock, pull-reset	5 million 1 million 100,000 100,000 30,000
Selector switch	Maintained 1, 2, 3, 4-contact Maintained 5, 6-contact Control type, spring return, spring/manual return	1 million 500,000 200,000
Illuminated selector switch	Maintained Without transformer 1, 2, 3-contact 4-contact With transformer 1, 2-contact 3-contact Spring return, spring/manual return	 1 million 500,000 1 million 500,000 200,000

Note: Key insertion/removal durability for selector switch key types
- Key type 10,000
- Key (Long durability) type 20,000

● Buzzers

Item	DR22B5	DR22B8
Rated insulation voltage	Without transformer: 60V AC/DC With transformer: 250V AC	
Sound level	90dB (0.1m) 70dB (1m)	80dB (0.1m) 60dB (1.0m)
Durability	1000h	1000h
Frequency	2.4 to 3.3kHz	
Intermittent cycle	Approx. 170-cycle/min	
Current consumption	See the table below	
Dielectric strength	Without transformer: 1000V AC 1 minute With transformer: 2000V AC 1 minute	
Insulation resistance	100MΩ or more (500V DC megger)	
Pollution degree	3	
Vibration	Resonance: 10 to 55Hz, double amplitude 0.1mm Constant: 16.7Hz, double amplitude 3.0mm	
Shock	Mechanical durability: 500m/s^2	
Ambient temperature	–20 to +60°C (No condensation or no icing) (with resistor unit: –20 to +40°C)	
Storage temperature	–30 to +70°C	
Humidity	45 to 85%RH (within –5 to 40°C)	
Degree of protection	IP00	IP54

• Current consumption

Operational voltage	Current consumption DR22B5, DR22B8
6V DC	35mA DC
24V AC/DC	40mA AC, 25mA DC
110V AC	30mA AC
220V AC	15mA AC

AR22 and DR22
Ratings and specifications

■ Contact ratings

● UL/CSA standards

AC (COS ø=0.35)

Contact rated code	120V		240V		480V		600V	
	Making current	Breaking current	Making current	Breaking current	Making current	Breaking current	Making current	Breaking current
A600	60A	6.0A	30A	3.0A	15A	1.5A	12A	1.2A
B300 (AR22VG, AR22VQ)	30A	3.0A	15A	1.5A	–	–	–	–

DC $T_{0.95}$= 6P (Max. 300ms)

Description	Contact rated code	Making current · Breaking current		
		125V	250V	301V–600V
Illuminated pushbutton switch Pushbutton (Ring type selector switch: AR22S2R only) Emergency stop pushbutton switch Emergency stop illuminated pushbutton switch (Except the overlap contact types)	P600	1.1A	0.55A	0.2A
	R300 (AR22VQ)	0.22A	0.11A	–
	Q300 (AR22VG)	0.55A	0.27A	–
Overlap contact types of products shown above Pushbutton (Ring type selector switch: AR22S1R, S6R only) Selector switch (2-position only, except the overlap contact types) Illuminated selector switch (2-position only, except the overlap contact types)	Q600	0.55A	0.27A	0.1A
Pushbutton (Ring type selector switch: AR22S3R only) Selector switch (2-pos./overlap contact type, 3-, 4-, 5-pos. type) Illuminated selector switch (2-pos./overlap contact type, 3-pos. type)	R300	0.22A	0.11A	–

Note: Joy stick selector switches (Lever switches): 250V AC, 5A (Res. load) 125V DC, 0.2A 24V DC, 1A (Res. load)

● EN standard/TÜV approved

Description	Rated operational current			
	Rated thermal current	Rated operational voltage	AC15 (Ind. load) Rated operational current	DC13 (Ind. load) Rated operational current
Illuminated pushbutton switch Pushbutton (Except the selector ring type) Emergency stop pushbutton switch Emergency stop illuminated pushbutton switch Selector switch (2-position) Illuminated selector switch (2-position)	10A (AR22VQ: 5A)	24V	6.0A (AR22VQ: –)	4.0A (AR22VG: 1.5A, AR22VQ:1.0A)
		120V	6.0A (AR22VG, AR22VQ: 3A)	–
		125V	–	1.3A (AR22VG: 0.3A, AR22VQ:0.22A)
		240V	6.0A (AR22VG: 3A, AR22VQ:1.5A)	– (AR22VQ: 0.1A)
		250V	–	0.45A(AR22VG: 0.15A, AR22VQ: –)
		480V	2.5A (AR22VG, AR22VQ: –)	–
		600V	2.0A (AR22VG, AR22VQ: –)	–
Selector switch (3, 4, 5-position) Illuminated selector switch (3-position) Pushbutton with selector ring	10A	24V	6.0A	2.0A
		120V	6.0A	–
		125V	–	0.65A
		240V	6.0A	–
		250V	–	0.23A
		480V	2.5A	–
		600V	2.0A	–
Joy stick selector switch (Lever switch)	5A	24V	–	0.7A
		120V	0.3A	–
		125V	–	0.15A
		240V	0.3A	–

Lamp rated voltage UL/CSA standards, TÜV approved

	LED lamp	Incandescent lamp	Neon lamp
Full-voltage (without transformer)	Max. 24V AC/DC	Max. 30V AC/DC	Max. 240V AC
With transformer	Max. 550V AC (Short-body type: Max. 220V AC)		–

■ Operating characteristic (1NO+1NC)

Description	Pushbutton Illuminated pushbutton	Emergency stop pushbutton Emergency stop illuminated pushbutton		Selector *2 Illuminated selector		
		Push-lock type	Push-pull type	Maintained	Spring/manual return	Spring return
Ave. required operating force	9N (Push-lock type: 20N)	30N (AR22VG: 22N)*1 (AR22VQ: 40N)	45N	0.15N•m	0.13N•m	0.1N•m
Operating travel	Approx. 6mm (Push-lock type: Approx. 9mm, operation angle: Approx. 45°)	Approx. 9mm (AR22VG: Approx. 10mm, operation angle: Approx. 45° AR22VQ: Approx. 7.8mm, operation angle: Approx. 45°)	Approx. 9mm	2-position: Approx. 90° 3-position: Approx. 45° 4-position: Approx. 40° 5-position: Approx. 30°	3-position: Approx. 45°	2-position: Approx. 60° 3-position: Approx. 45°
Required return force	– (Push-lock type: 0.6N•m)	0.6N•m (AR22VQ: 0.38N•m) (AR22VG: 0.2N•m)	30N (pull)	0.15N•m	0.13N•m	–

Notes: *1 AR22V2R, V4R, V7R, VAL types: 45N
*2 4-position, 5-position: 2NO+2NC

■ Lamp ratings

• Illuminated pushbuttons, illuminated selectors, pilot lights

Transformer	Lamp voltage	LED			Incandescent		
		Type	Rated voltage	Consumption	Type	Rated voltage	Consumption
Without transformer	5.5V AC/DC	–	–	–	AHX135	6.3V AC/DC	0.9W
	6V AC	APX510-6□	6V AC	Green, red, orange, amber, blue: 7mA AC Yellow: 40mA AC	–	–	–
	6V DC	APX510-D6□	6V DC	Green, red, orange, amber, blue: 11mA DC Yellow: 22mA DC	–	–	–
	12V AC/DC	APX510-12□	12V AC/DC	Green, red, orange, amber, blue: 14mA AC,11mA DC Yellow: 24mA AC, 22mA DC	–	–	–
	15V AC/DC	APX510-15□	15V AC/DC	Green, red, orange, amber, blue: 13mA AC,11mA DC Yellow: 24mA AC, 22mA DC	AHX279	18V AC/DC	0.8W
	20V AC/DC	–	–	–	AHX144	24V AC/DC	0.9W
	24V AC/DC	APX510-24□	24V AC/DC	12mA AC, 11mA DC	AHX129	30V AC/DC	0.8W
With transformer (Standard type: AR9T511)	110V AC	APX510-6□	6V AC	1.5VA	AHX135	6.3V AC/DC	2VA
	127V AC						2VA
	220V AC						2VA
	254V AC	APX510-6□	6V AC	2.5VA	AHX135	6.3V AC/DC	2.5VA
	380V AC						2.5VA
	440V AC						2.5VA
	480V AC						2.5VA
	550V AC						2.5VA
With resistor unit (AR9T519-H)	110V DC	APX510-24□	24V AC/DC	1.2W	–	–	–

Notes: • Short body pilot lights: 110V AC, 127V AC, 220V AC only
• Replace the □ mark by the lamp luminous color code, *see page C1-16*
• Except AR22VGF type

• Emergency stop illuminated pushbuttons (AR22VGF type)

Transformer	Lamp	Voltage	Type	Rated voltage	Consumption
Without transformer	LED	24V AC/DC	AR9L002-ER	24V AC/DC	12mA AC 11mA DC
	Neon	110V AC	AR9N001-HA	110V AC	0.19VA
		120V AC	AR9N001-KA	120V AC	0.21VA
		220V AC	AR9N001-MA	220V AC	0.30VA
		240V AC	AR9N001-PA	240V AC	0.30VA

Notes: Lamp base: BA9S/13

• Emergency stop illuminated pushbuttons (AR22VQL type)

Transformer	Lamp	Voltage	Rated voltage	Consumption
Without transformer	LED	24V AC/DC	24V AC/DC	7.5mA AC 7.5mA DC

Notes: The LED lamp of these products cannot be replaced.

AR22 and DR22
Ratings and specifications

■ Lamp durability

Lamp	Durability (reference)	Judgement criterion
LED	Approx. 30000h	When brightness is less than 50% of initial value
Incandescent	Approx. 5000h (AC)	When the bulb burns out
Neon	Approx. 5000h	When a remarkable blackening appears in the glass bulb and the using becomes improper

Notes: • The operating voltage for incandescent lamps is set at 80 to 90% of the lamp's rated voltage.
• The durability of LED lamp is a mean value in all colors.

Estimated durability for LED lamps

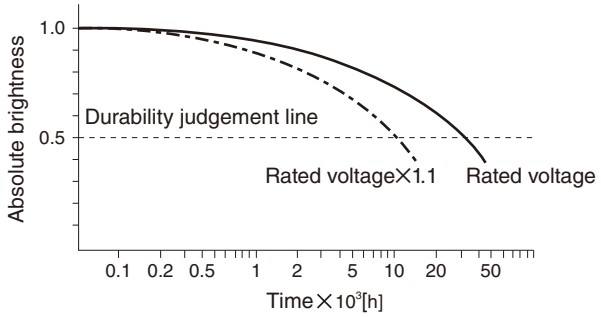

Notes: • Durability at Ta=25˚C
• Durability is affected by temperature, humidity, and voltage fluctuation.

Incandescent lamp voltage characteristics

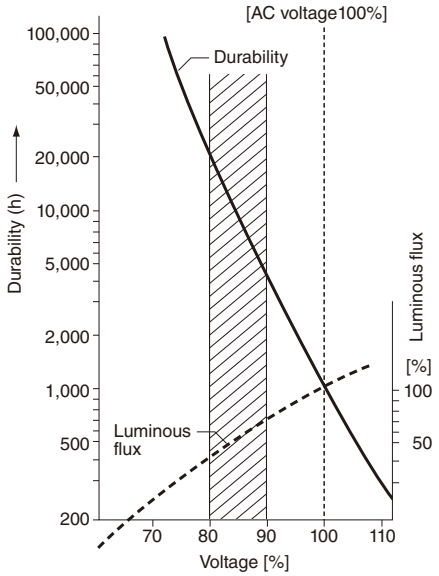

■ Combination of lens color and LED or neon lamp luminous color

Lens Color	Code	LED or neon lamp Luminous color	Type
Green	G	Green	APX510-■G
Red	R	Red	APX510-■R
White	W	Orange	APX510-■O
Yellow	Y	Yellow	APX510-■Y
Orange *	A	Amber	APX510-■A
Blue	S	Blue	APX510-■S
Red (AR22VGF)	R	Red	AR9L002-ER
		Orange (Neon lamp)	AR9N001-■A

Notes: * DR22F4M: LED lamp color is orange. (APX510- ■ O)
• Replace the ■ mark by the lamp voltage code

■ Illuminated pushbutton switches

Operator	Trans-former	Contact	LED lamp Momentary action Type	LED lamp Alternate action Type	Incandescent lamp Momentary action Type	Incandescent lamp Alternate action Type
Flush round head KKD05-001a	Without	1NO	**AR22F0L-10■3□**	**AR22F5L-10■3□**	**AR22F0L-10■4□**	**AR22F5L-10■4□**
		1NC	**AR22F0L-01■3□**	**AR22F5L-01■3□**	**AR22F0L-01■4□**	**AR22F5L-01■4□**
		1NO+1NC	**AR22F0L-11■3□**	**AR22F5L-11■3□**	**AR22F0L-11■4□**	**AR22F5L-11■4□**
		2NO+2NC	**AR22F0L-22■3□**	—	**AR22F0L-22■4□**	—
	With	1NO	**AR22F0L-10■3□**	**AR22F5L-10■3□**	**AR22F0L-10■4□**	**AR22F5L-10■4□**
		1NC	**AR22F0L-01■3□**	**AR22F5L-01■3□**	**AR22F0L-01■4□**	**AR22F5L-01■4□**
		1NO+1NC	**AR22F0L-11■3□**	**AR22F5L-11■3□**	**AR22F0L-11■4□**	**AR22F5L-11■4□**
Extended round head KKD05-003a	Without	1NO	**AR22E0L-10■3□**	**AR22E5L-10■3□**	**AR22E0L-10■4□**	**AR22E5L-10■4□**
		1NC	**AR22E0L-01■3□**	**AR22E5L-01■3□**	**AR22E0L-01■4□**	**AR22E5L-01■4□**
		1NO+1NC	**AR22E0L-11■3□**	**AR22E5L-11■3□**	**AR22E0L-11■4□**	**AR22E5L-11■4□**
		2NO+2NC	**AR22E0L-22■3□**	—	**AR22E0L-22■4□**	—
	With	1NO	**AR22E0L-10■3□**	**AR22E5L-10■3□**	**AR22E0L-10■4□**	**AR22E5L-10■4□**
		1NC	**AR22E0L-01■3□**	**AR22E5L-01■3□**	**AR22E0L-01■4□**	**AR22E5L-01■4□**
		1NO+1NC	**AR22E0L-11■3□**	**AR22E5L-11■3□**	**AR22E0L-11■4□**	**AR22E5L-11■4□**
Mushroom head (40mm dia.) KKD05-005a	Without	1NO	**AR22M0L-10■3□**	**AR22M5L-10■3□**	**AR22M0L-10■4□**	**AR22M5L-10■4□**
		1NC	**AR22M0L-01■3□**	**AR22M5L-01■3□**	**AR22M0L-01■4□**	**AR22M5L-01■4□**
		1NO+1NC	**AR22M0L-11■3□**	**AR22M5L-11■3□**	**AR22M0L-11■4□**	**AR22M5L-11■4□**
		2NO+2NC	**AR22M0L-22■3□**	—	**AR22M0L-22■4□**	—
	With	1NO	**AR22M0L-10■3□**	**AR22M5L-10■3□**	**AR22M0L-10■4□**	**AR22M5L-10■4□**
		1NC	**AR22M0L-01■3□**	**AR22M5L-01■3□**	**AR22M0L-01■4□**	**AR22M5L-01■4□**
		1NO+1NC	**AR22M0L-11■3□**	**AR22M5L-11■3□**	**AR22M0L-11■4□**	**AR22M5L-11■4□**
Mushroom head (29mm dia.) KKD18-382	Without	1NO	**AR22M4L-10■3□**	**AR22M9L-10■3□**	**AR22M4L-10■4□**	**AR22M9L-10■4□**
		1NC	**AR22M4L-01■3□**	**AR22M9L-01■3□**	**AR22M4L-01■4□**	**AR22M9L-01■4□**
		1NO+1NC	**AR22M4L-11■3□**	**AR22M9L-11■3□**	**AR22M4L-11■4□**	**AR22M9L-11■4□**
		2NO+2NC	**AR22M4L-22■3□**	—	**AR22M4L-22■4□**	—
	With	1NO	**AR22M4L-10■3□**	**AR22M9L-10■3□**	**AR22M4L-10■4□**	**AR22M9L-10■4□**
		1NC	**AR22M4L-01■3□**	**AR22M9L-01■3□**	**AR22M4L-01■4□**	**AR22M9L-01■4□**
		1NO+1NC	**AR22M4L-11■3□**	**AR22M9L-11■3□**	**AR22M4L-11■4□**	**AR22M9L-11■4□**
Extended with transparent full guard (24mm dia.) KKD05-007a	Without	1NO	**AR22G4L-10■3□**	**AR22G9L-10■3□**	**AR22G4L-10■4□**	**AR22G9L-10■4□**
		1NC	**AR22G4L-01■3□**	**AR22G9L-01■3□**	**AR22G4L-01■4□**	**AR22G9L-01■4□**
		1NO+1NC	**AR22G4L-11■3□**	**AR22G9L-11■3□**	**AR22G4L-11■4□**	**AR22G9L-11■4□**
		2NO+2NC	**AR22G4L-22■3□**	—	**AR22G4L-22■4□**	—
	With	1NO	**AR22G4L-10■3□**	**AR22G9L-10■3□**	**AR22G4L-10■4□**	**AR22G9L-10■4□**
		1NC	**AR22G4L-01■3□**	**AR22G9L-01■3□**	**AR22G4L-01■4□**	**AR22G9L-01■4□**
		1NO+1NC	**AR22G4L-11■3□**	**AR22G9L-11■3□**	**AR22G4L-11■4□**	**AR22G9L-11■4□**
Extended with full guard (24mm dia. with openings) KKD18-376	Without	1NO	**AR22G2L-10■3□**	**AR22G7L-10■3□**	**AR22G2L-10■4□**	**AR22G7L-10■4□**
		1NC	**AR22G2L-01■3□**	**AR22G7L-01■3□**	**AR22G2L-01■4□**	**AR22G7L-01■4□**
		1NO+1NC	**AR22G2L-11■3□**	**AR22G7L-11■3□**	**AR22G2L-11■4□**	**AR22G7L-11■4□**
		2NO+2NC	**AR22G2L-22■3□**	—	**AR22G2L-22■4□**	—
	With	1NO	**AR22G2L-10■3□**	**AR22G7L-10■3□**	**AR22G2L-10■4□**	**AR22G7L-10■4□**
		1NC	**AR22G2L-01■3□**	**AR22G7L-01■3□**	**AR22G2L-01■4□**	**AR22G7L-01■4□**
		1NO+1NC	**AR22G2L-11■3□**	**AR22G7L-11■3□**	**AR22G2L-11■4□**	**AR22G7L-11■4□**

Note: ■ □ *See page C1-19*

AR22

Operator	Trans-former	Contact	LED lamp Momentary action Type	LED lamp Alternate action Type	Incandescent lamp Momentary action Type	Incandescent lamp Alternate action Type
Extended with full guard (24mm dia.) KKD18-375	Without	1NO	**AR22G1L-10■3□**	**AR22G6L-10■3□**	**AR22G1L-10■4□**	**AR22G6L-10■4□**
		1NC	**AR22G1L-01■3□**	**AR22G6L-01■3□**	**AR22G1L-01■4□**	**AR22G6L-01■4□**
		1NO+1NC	**AR22G1L-11■3□**	**AR22G6L-11■3□**	**AR22G1L-11■4□**	**AR22G6L-11■4□**
		2NO+2NC	**AR22G1L-22■3□**	—	**AR22G1L-22■4□**	—
	With	1NO	**AR22G1L-10■3□**	**AR22G6L-10■3□**	**AR22G1L-10■4□**	**AR22G6L-10■4□**
		1NC	**AR22G1L-01■3□**	**AR22G6L-01■3□**	**AR22G1L-01■4□**	**AR22G6L-01■4□**
		1NO+1NC	**AR22G1L-11■3□**	**AR22G6L-11■3□**	**AR22G1L-11■4□**	**AR22G6L-11■4□**
Push-lock, turn-reset (40mm dia. with white arrow) 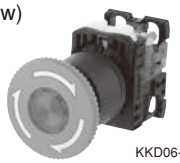 KKD06-335	Without	1NO	—	**AR22V5L-10■3□**	—	**AR22V5L-10■4□**
		1NC	—	**AR22V5L-01■3□**	—	**AR22V5L-01■4□**
		1NO+1NC	—	**AR22V5L-11■3□**	—	**AR22V5L-11■4□**
		3NC	—	**AR22V5L-03■3□**	—	**AR22V5L-03■4□**
	With	1NO	—	**AR22V5L-10■3□**	—	**AR22V5L-10■4□**
		1NC	—	**AR22V5L-01■3□**	—	**AR22V5L-01■4□**
		1NO+1NC	—	**AR22V5L-11■3□**	—	**AR22V5L-11■4□**
Flush square head 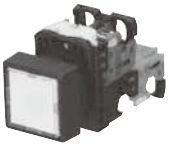 KKD05-009a	Without	1NO	**AR22F0M-10■3□**	**AR22F5M-10■3□**	**AR22F0M-10■4□**	**AR22F5M-10■4□**
		1NC	**AR22F0M-01■3□**	**AR22F5M-01■3□**	**AR22F0M-01■4□**	**AR22F5M-01■4□**
		1NO+1NC	**AR22F0M-11■3□**	**AR22F5M-11■3□**	**AR22F0M-11■4□**	**AR22F5M-11■4□**
		2NO+2NC	**AR22F0M-22■3□**	—	**AR22F0M-22■4□**	—
	With	1NO	**AR22F0M-10■3□**	**AR22F5M-10■3□**	**AR22F0M-10■4□**	**AR22F5M-10■4□**
		1NC	**AR22F0M-01■3□**	**AR22F5M-01■3□**	**AR22F0M-01■4□**	**AR22F5M-01■4□**
		1NO+1NC	**AR22F0M-11■3□**	**AR22F5M-11■3□**	**AR22F0M-11■4□**	**AR22F5M-11■4□**
Extended square head 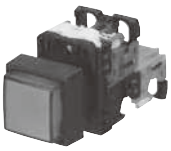 KKD05-011a	Without	1NO	**AR22E0M-10■3□**	**AR22E5M-10■3□**	**AR22E0M-10■4□**	**AR22E5M-10■4□**
		1NC	**AR22E0M-01■3□**	**AR22E5M-01■3□**	**AR22E0M-01■4□**	**AR22E5M-01■4□**
		1NO+1NC	**AR22E0M-11■3□**	**AR22E5M-11■3□**	**AR22E0M-11■4□**	**AR22E5M-11■4□**
		2NO+2NC	**AR22E0M-22■3□**	—	**AR22E0M-22■4□**	—
	With	1NO	**AR22E0M-10■3□**	**AR22E5M-10■3□**	**AR22E0M-10■4□**	**AR22E5M-10■4□**
		1NC	**AR22E0M-01■3□**	**AR22E5M-01■3□**	**AR22E0M-01■4□**	**AR22E5M-01■4□**
		1NO+1NC	**AR22E0M-11■3□**	**AR22E5M-11■3□**	**AR22E0M-11■4□**	**AR22E5M-11■4□**
Flush round head with square bezel KKD18-371	Without	1NO	**AR22F0P-10■3□**	**AR22F5P-10■3□**	**AR22F0P-10■4□**	**AR22F5P-10■4□**
		1NC	**AR22F0P-01■3□**	**AR22F5P-01■3□**	**AR22F0P-01■4□**	**AR22F5P-01■4□**
		1NO+1NC	**AR22F0P-11■3□**	**AR22F5P-11■3□**	**AR22F0P-11■4□**	**AR22F5P-11■4□**
		2NO+2NC	**AR22F0P-22■3□**	—	**AR22F0P-22■4□**	—
	With	1NO	**AR22F0P-10■3□**	**AR22F5P-10■3□**	**AR22F0P-10■4□**	**AR22F5P-10■4□**
		1NC	**AR22F0P-01■3□**	**AR22F5P-01■3□**	**AR22F0P-01■4□**	**AR22F5P-01■4□**
		1NO+1NC	**AR22F0P-11■3□**	**AR22F5P-11■3□**	**AR22F0P-11■4□**	**AR22F5P-11■4□**
Extended round head with square bezel KKD18-366	Without	1NO	**AR22E0P-10■3□**	**AR22E5P-10■3□**	**AR22E0P-10■4□**	**AR22E5P-10■4□**
		1NC	**AR22E0P-01■3□**	**AR22E5P-01■3□**	**AR22E0P-01■4□**	**AR22E5P-01■4□**
		1NO+1NC	**AR22E0P-11■3□**	**AR22E5P-11■3□**	**AR22E0P-11■4□**	**AR22E5P-11■4□**
		2NO+2NC	**AR22E0P-22■3□**	—	**AR22E0P-22■4□**	—
	With	1NO	**AR22E0P-10■3□**	**AR22E5P-10■3□**	**AR22E0P-10■4□**	**AR22E5P-10■4□**
		1NC	**AR22E0P-01■3□**	**AR22E5P-01■3□**	**AR22E0P-01■4□**	**AR22E5P-01■4□**
		1NO+1NC	**AR22E0P-11■3□**	**AR22E5P-11■3□**	**AR22E0P-11■4□**	**AR22E5P-11■4□**

Note: ■ □ *See page C1-19*

Operator	Trans-former	Contact	LED lamp Momentary action Type	LED lamp Alternate action Type	Incandescent lamp Momentary action Type	Incandescent lamp Alternate action Type
Mushroom head with square bezel (29mm dia.) KKD18-383	Without	1NO	**AR22M4P-10■3□**	—	**AR22M4P-10■4**	—
		1NC	**AR22M4P-01■3□**	—	**AR22M4P-01■4**	—
		1NO+1NC	**AR22M4P-11■3□**	—	**AR22M4P-11■4**	—
		2NO+2NC	**AR22M4P-22■3□**	—	**AR22M4P-22■4**	—
	With	1NO	**AR22M4P-10■3□**	—	**AR22M4P-10■4**	—
		1NC	**AR22M4P-01■3□**	—	**AR22M4P-01■4**	—
		1NO+1NC	**AR22M4P-11■3□**	—	**AR22M4P-11■4**	—

· **Lens color**

Replace the □ mark by the lens color code

Color	Green	Red	White	Blue	Yellow	Orange
Code	G	R	W	S	Y	A

Note: AR22V5L type: Red, yellow only

· **Contact arrangements**

Contact arrangements other than above are available

Contact arrangement	1NO	1NC	1NO+1NC	2NO	2NC	3NO
Code	10	01	11	20	02	30

Contact arrangement	3NC	2NO+2NC	4NO	4NC	5NO	5NC
Code	03	22	40	04	50	05

Available numbers of contact blocks

Operation	Without transformer	With transformer
Momentary action	5-contact block	3-contact block
Alternate action Push-lock, turn-reset	3-contact block	2-contact block

· **Voltage**

Replace the ■ mark by the lamp voltage code

Transformer		Code LED	Incandescent
Without transformer	6V DC	6	—
	6V AC	A	—
	5.5V AC/DC	—	5
	12V AC/DC	B	—
	15V AC/DC	C	C
	20V AC/DC	—	D
	24V AC/DC	E	E
With transformer	100-110V AC	H	H
	115-127V AC	L	L
	200-220V AC	M	M
	230-254V AC	Q	Q
	350-380V AC	S	S
	400-440V AC	T	T
	480V AC	V	V
	500-550V AC	W	W

■ Pushbutton switches

Operator	Contact	Momentary action Type	Alternate action Type
Flush round head KKD05-013a	1NO	**AR22F0R-10□**	**AR22F5R-10□**
	1NC	**AR22F0R-01□**	**AR22F5R-01□**
	1NO+1NC	**AR22F0R-11□**	**AR22F5R-11□**
	2NO	**AR22F0R-20□**	**AR22F5R-20□**
	2NC	**AR22F0R-02□**	**AR22F5R-02□**
	2NO+2NC	**AR22F0R-22□**	**AR22F5R-22□**
Extended round head KKD05-014a	1NO	**AR22E0R-10□**	**AR22E5R-10□**
	1NC	**AR22E0R-01□**	**AR22E5R-01□**
	1NO+1NC	**AR22E0R-11□**	**AR22E5R-11□**
	2NO	**AR22E0R-20□**	**AR22E5R-20□**
	2NC	**AR22E0R-02□**	**AR22E5R-02□**
	2NO+2NC	**AR22E0R-22□**	**AR22E5R-22□**
Flush round head symbol mark type AF98-193	1NO	**AR22FAR-10C■**	**AR22FBR-10C■**
	1NC	**AR22FAR-01C■**	**AR22FBR-01C■**
	1NO+1NC	**AR22FAR-11C■**	**AR22FBR-11C■**
	2NO	**AR22FAR-20C■**	**AR22FBR-20C■**
	2NC	**AR22FAR-02C■**	**AR22FBR-02C■**
	2NO+2NC	**AR22FAR-22C■**	**AR22FBR-22C■**
Extended round head symbol mark type AF98-192	1NO	**AR22EAR-10C■**	**AR22EBR-10C■**
	1NC	**AR22EAR-01C■**	**AR22EBR-01C■**
	1NO+1NC	**AR22EAR-11C■**	**AR22EBR-11C■**
	2NO	**AR22EAR-20C■**	**AR22EBR-20C■**
	2NC	**AR22EAR-02C■**	**AR22EBR-02C■**
	2NO+2NC	**AR22EAR-22C■**	**AR22EBR-22C■**
Mushroom head (40mm dia.) KKD05-015a	1NO	**AR22M0R-10□**	**AR22M5R-10□**
	1NC	**AR22M0R-01□**	**AR22M5R-01□**
	1NO+1NC	**AR22M0R-11□**	**AR22M5R-11□**
	2NO	**AR22M0R-20□**	**AR22M5R-20□**
	2NC	**AR22M0R-02□**	**AR22M5R-02□**
	2NO+2NC	**AR22M0R-22□**	**AR22M5R-22□**
Mushroom head (29mm dia.) KKD05-016a	1NO	**AR22M4R-10□**	**AR22M9R-10□**
	1NC	**AR22M4R-01□**	**AR22M9R-01□**
	1NO+1NC	**AR22M4R-11□**	**AR22M9R-11□**
	2NO	**AR22M4R-20□**	**AR22M9R-20□**
	2NC	**AR22M4R-02□**	**AR22M9R-02□**
	2NO+2NC	**AR22M4R-22□**	**AR22M9R-22□**
Extended with full guard (24mm dia.) KKD18-378	1NO	**AR22G3R-10□**	**AR22G8R-10□**
	1NC	**AR22G3R-01□**	**AR22G8R-01□**
	1NO+1NC	**AR22G3R-11□**	**AR22G8R-11□**
	2NO	**AR22G3R-20□**	**AR22G8R-20□**
	2NC	**AR22G3R-02□**	**AR22G8R-02□**
	2NO+2NC	**AR22G3R-22□**	**AR22G8R-22□**

Operator	Contact	Momentary action Type	Alternate action Type
Flush with full guard (24mm dia.) AF02-68	1NO	**AR22G2R-10□**	**AR22G7R-10□**
	1NC	**AR22G2R-01□**	**AR22G7R-01□**
	1NO+1NC	**AR22G2R-11□**	**AR22G7R-11□**
	2NO	**AR22G2R-20□**	**AR22G7R-20□**
	2NC	**AR22G2R-02□**	**AR22G7R-02□**
	2NO+2NC	**AR22G2R-22□**	**AR22G7R-22□**
Mushroom head with full guard (40mm dia.) KKD18-381	1NO	**AR22M3R-10□**	**AR22M8R-10□**
	1NC	**AR22M3R-01□**	**AR22M8R-01□**
	1NO+1NC	**AR22M3R-11□**	**AR22M8R-11□**
	2NO	**AR22M3R-20□**	**AR22M8R-20□**
	2NC	**AR22M3R-02□**	**AR22M8R-02□**
	2NO+2NC	**AR22M3R-22□**	**AR22M8R-22□**
Extended with half guard KKD18-374	1NO	**AR22G0R-10□**	**AR22G5R-10□**
	1NC	**AR22G0R-01□**	**AR22G5R-01□**
	1NO+1NC	**AR22G0R-11□**	**AR22G5R-11□**
	2NO	**AR22G0R-20□**	**AR22G5R-20□**
	2NC	**AR22G0R-02□**	**AR22G5R-02□**
	2NO+2NC	**AR22G0R-22□**	**AR22G5R-22□**
Push-lock, turn-reset (40mm dia. with white arrow) 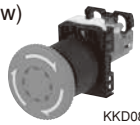 KKD08-042	1NO	—	**AR22V5R-10□**
	1NC	—	**AR22V5R-01□**
	1NO+1NC	—	**AR22V5R-11□**
	2NO	—	**AR22V5R-20□**
	2NC	—	**AR22V5R-02□**
	2NO+2NC	—	**AR22V5R-22□**
Flush square head KKD05-018a	1NO	**AR22F0S-10□**	**AR22F5S-10□**
	1NC	**AR22F0S-01□**	**AR22F5S-01□**
	1NO+1NC	**AR22F0S-11□**	**AR22F5S-11□**
	2NO	**AR22F0S-20□**	**AR22F5S-20□**
	2NC	**AR22F0S-02□**	**AR22F5S-02□**
	2NO+2NC	**AR22F0S-22□**	**AR22F5S-22□**
Extended square head KKD05-019a	1NO	**AR22E0S-10□**	**AR22E5S-10□**
	1NC	**AR22E0S-01□**	**AR22E5S-01□**
	1NO+1NC	**AR22E0S-11□**	**AR22E5S-11□**
	2NO	**AR22E0S-20□**	**AR22E5S-20□**
	2NC	**AR22E0S-02□**	**AR22E5S-02□**
	2NO+2NC	**AR22E0S-22□**	**AR22E5S-22□**
Flush round head with square bezel KKD18-370	1NO	**AR22F0Y-10□**	**AR22F5Y-10□**
	1NC	**AR22F0Y-01□**	**AR22F5Y-01□**
	1NO+1NC	**AR22F0Y-11□**	**AR22F5Y-11□**
	2NO	**AR22F0Y-20□**	**AR22F5Y-20□**
	2NC	**AR22F0Y-02□**	**AR22F5Y-02□**
	2NO+2NC	**AR22F0Y-22□**	**AR22F5Y-22□**

Note: ■ □ *See page C1-21*

Operator	Contact	Momentary action Type	Alternate action Type
Extended round head with square bezel KKD18-367	1NO	**AR22E0Y-10□**	**AR22E5Y-10□**
	1NC	**AR22E0Y-01□**	**AR22E5Y-01□**
	1NO+1NC	**AR22E0Y-11□**	**AR22E5Y-11□**
	2NO	**AR22E0Y-20□**	**AR22E5Y-20□**
	2NC	**AR22E0Y-02□**	**AR22E5Y-02□**
	2NO+2NC	**AR22E0Y-22□**	**AR22E5Y-22□**

Operator	Contact	Momentary action Type	Alternate action Type
Mushroom head with square bezel (29mm dia.) KKD18-385	1NO	**AR22M4Y-10□**	—
	1NC	**AR22M4Y-01□**	—
	1NO+1NC	**AR22M4Y-11□**	—
	2NO	**AR22M4Y-20□**	—
	2NC	**AR22M4Y-02□**	—
	2NO+2NC	**AR22M4Y-22□**	—

· **Button color**

Replace the □ mark by the button color code

Color	Green	Red	White	Blue	Yellow	Orange	Black
Code	G	R	W	S	Y	A	B

Note: AR22V5R type: Red, yellow, black only

· **Contact arrangements**

Contact arrangements other than above are available

Contact arrangement	1NO	1NC	1NO+1NC	2NO	2NC	3NO	3NC
Code	10	01	11	20	02	30	03

Contact arrangement	2NO+2NC	4NO	4NC	5NO	5NC	3NO+3NC
Code	22	40	04	50	05	33

· **Available numbers of contact blocks**

Momentary action	Alternate action Push-lock, turn-reset
6-contact block	4-contact block

· **Symbol mark** (For AR22FAR, FBR, EAR, EBR)

Replace the ■ mark by the symbol mark code

Symbol mark	◯		I		Ⓣ		◯	I	Ⓣ
Color of button	White	Black	White	Black	White	Black	Clear		
Color of mark	Red		Green		Green		Black		
Code	01	02	03	04	11	12	02B	04B	12B

Operator	Contact (The following contact is only available.)	Button color	Type	Contact operation					
				Contact block		Left		Right	
				Mounting position	Type	Free	Depressed	Free	Depressed
Pushbutton with selector ring (2-position) KKD05-017a	2NO+2NC	Green Red Black White Yellow Orange Blue	**AR22S1R-22G** **AR22S1R-22R** **AR22S1R-22B** **AR22S1R-22W** **AR22S1R-22Y** **AR22S1R-22A** **AR22S1R-22S**	(1)	NC	—	—	●	—
				(2)	NC	—	—	●	—
				(3)	NO	—	●	—	●
				(4)	NO	—	●	—	●
	2NO	Green Red Black White Yellow Orange Blue	**AR22S2R-20G** **AR22S2R-20R** **AR22S2R-20B** **AR22S2R-20W** **AR22S2R-20Y** **AR22S2R-20A** **AR22S2R-20S**	(1)	NO	—	●	—	—
				(2)	NO	—	—	—	●
	2NO+2NC	Green Red Black White Yellow Orange Blue	**AR22S2R-22G** **AR22S2R-22R** **AR22S2R-22B** **AR22S2R-22W** **AR22S2R-22Y** **AR22S2R-22A** **AR22S2R-22S**	(1)	NC	●	—	▬	
				(2)	NC	▬		●	—
				(3)	NO	—	●	—	—
				(4)	NO	—	—	—	●
	2NO+2NC	Green Red Black White Yellow Orange Blue	**AR22S3R-22G** **AR22S3R-22R** **AR22S3R-22B** **AR22S3R-22W** **AR22S3R-22Y** **AR22S3R-22A** **AR22S3R-22S**	(1)	NC	—	—	▬	
				(2)	NC	▬		—	—
				(3)	NO	—	●	—	—
				(4)	NO	—	—	—	●
	2NO+2NC	Green Red Black White Yellow Orange Blue	**AR22S6R-22G** **AR22S6R-22R** **AR22S6R-22B** **AR22S6R-22W** **AR22S6R-22Y** **AR22S6R-22A** **AR22S6R-22S**	(1)	NC	●	—	—	Locked
				(2)	NC	●	—	—	
				(3)	NO	—	●	●	
				(4)	NO	—	●	●	

Note: (1) to (4): Contact block mounting position

● Contact closed
— Contact open

• **Position of contact block**

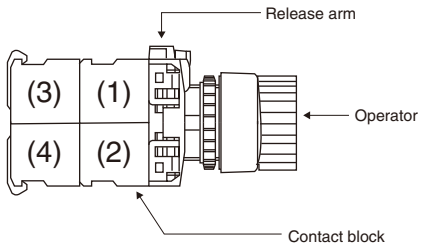

■ Emergency stop pushbutton switches

⊖ (Direct opening action), conform to EN418

Operator	Contact	Type
Push-lock, turn-reset (Soft-touch 40mm dia.) KKD05-020b	**1NC** **1NO+1NC** **2NC** **3NC** **2NO+2NC** **4NC**	**AR22V0R-01R** **AR22V0R-11R** **AR22V0R-02R** **AR22V0R-03R** **AR22V0R-22R** **AR22V0R-04R**
Push-lock, turn-reset (40mm dia.) KKD05-020b	**1NC** **1NO+1NC** **2NC** **3NC** **2NO+2NC** **4NC**	**AR22V2R-01R** **AR22V2R-11R** **AR22V2R-02R** **AR22V2R-03R** **AR22V2R-22R** **AR22V2R-04R**
Push-lock, turn-reset (Soft-touch 29mm dia.) KKD16-080	**1NC** **1NO+1NC** **2NC** **3NC** **2NO+2NC** **4NC**	**AR22VSR-01R** **AR22VSR-11R** **AR22VSR-02R** **AR22VSR-03R** **AR22VSR-22R** **AR22VSR-04R**
Push-lock, turn-reset (29mm dia.) aKKD06-339	**1NC** **1NO+1NC** **2NC** **3NC** **2NO+2NC** **4NC**	**AR22V4R-01R** **AR22V4R-11R** **AR22V4R-02R** **AR22V4R-03R** **AR22V4R-22R** **AR22V4R-04R**

Notes: • Button color : Red only
• Contact arrangements indicated in the table can be supplied.

Operator	Contact	Type
Key release push-lock, turn-reset (40mm dia.) KKD09-020	**1NC** **1NO+1NC** **2NC** **3NC** **2NO+2NC** **4NC**	**AR22V7R-01R** **AR22V7R-11R** **AR22V7R-02R** **AR22V7R-03R** **AR22V7R-22R** **AR22V7R-04R**
Push-lock, pull-reset (35mm dia.) KKD06-334	**1NC** **1NO+1NC** **2NC**	**AR22Q2R-01R** **AR22Q2R-11R** **AR22Q2R-02R**
Unibody push-lock, turn-reset (Soft-touch 40mm dia.) KKD16-078	**1NC** **1NO+1NC** **2NC**	**AR22VGE-01R** **AR22VGE-11R** **AR22VGE-02R**
Push-lock, turn-reset or pull reset Mushroom head (ø40) KKD16-067	**1NC** **1NO+1NC** **2NC** **1NO+2NC** **1NO+3NC** **4NC** **2NO+4NC**	**AR22VQR-01R**[*1] **AR22VQR-11R** **AR22VQR-02R** **AR22VQR-12R** **AR22VQR-13R** **AR22VQR-04R** **AR22VQR-24R**
Push-lock, turn-reset Giant Mushroom head (ø65) KKD16-065	**1NC** **1NO+1NC** **2NC** **1NO+2NC** **1NO+3NC** **4NC** **2NO+4NC**	**AR22VPR-01R**[*1] **AR22VPR-11R** **AR22VPR-02R** **AR22VPR-12R** **AR22VPR-13R** **AR22VPR-04R** **AR22VPR-24R**

Notes: [*1] Contacts other than those insthe table above are also available, 3NC [03], 2NO+1NC [21], 1NO+4NC [14], 2NO+2NC [22], 2NO+3NC [23]

■ Emergency stop illuminated pushbutton switches

⊖ (Direct opening action), conform to EN418

Operator	Transformer	Contact	LED lamp Type	Incandescent lamp Type	Neon lamp Type
Push-lock, turn-reset (Soft-touch 40mm dia.) KKD16-061	Without	1NC 1NO+1NC 2NC 3NC	**AR22V0L-01■3R** **AR22V0L-11■3R** **AR22V0L-02■3R** **AR22V0L-03■3R**	**AR22V0L-01■4R** **AR22V0L-11■4R** **AR22V0L-02■4R** **AR22V0L-03■4R**	— — — —
	With	1NC 1NO+1NC 2NC	**AR22V0L-01■3R** **AR22V0L-11■3R** **AR22V0L-02■3R**	**AR22V0L-01■4R** **AR22V0L-11■4R** **AR22V0L-02■4R**	— — —
Push-lock, turn-reset (40mm dia.) KKD06-337	Without	1NC 1NO+1NC 2NC 3NC	**AR22V2L-01■3R** **AR22V2L-11■3R** **AR22V2L-02■3R** **AR22V2L-03■3R**	**AR22V2L-01■4R** **AR22V2L-11■4R** **AR22V2L-02■4R** **AR22V2L-03■4R**	— — — —
	With	1NC 1NO+1NC 2NC	**AR22V2L-01■3R** **AR22V2L-11■3R** **AR22V2L-02■3R**	**AR22V2L-01■4R** **AR22V2L-11■4R** **AR22V2L-02■4R**	— — —
Push-lock, turn-reset (Soft-touch 40mm dia. transparent in all colors) KKD06-340	Without	1NC 1NO+1NC 2NC 3NC	**AR22VDL-01■3R** **AR22VDL-11■3R** **AR22VDL-02■3R** **AR22VDL-03■3R**	**AR22VDL-01■4R** **AR22VDL-11■4R** **AR22VDL-02■4R** **AR22VDL-03■4R**	— — — —
	With	1NC 1NO+1NC 2NC	**AR22VDL-01■3R** **AR22VDL-11■3R** **AR22VDL-02■3R**	**AR22VDL-01■4R** **AR22VDL-11■4R** **AR22VDL-02■4R**	— — —

Operator	Transformer	Contact	LED lamp Type	Incandescent lamp Type	Neon lamp Type
Push-lock, turn-reset (40mm dia. transparent in all colors) KKD06-340	Without	1NC	**AR22VAL-01■3R**	**AR22VAL-01■4R**	—
		1NO+1NC	**AR22VAL-11■3R**	**AR22VAL-11■4R**	—
		2NC	**AR22VAL-02■3R**	**AR22VAL-02■4R**	—
		3NC	**AR22VAL-03■3R**	**AR22VAL-03■4R**	—
	With	1NC	**AR22VAL-01■3R**	**AR22VAL-01■4R**	—
		1NO+1NC	**AR22VAL-11■3R**	**AR22VAL-11■4R**	—
		2NC	**AR22VAL-02■3R**	**AR22VAL-02■4R**	—
Push-lock, turn-reset (Soft-touch 29mm dia.) KKD16-069	Without	1NC	**AR22VSL-01■3R**	**AR22VSL-01■4R**	—
		1NO+1NC	**AR22VSL-11■3R**	**AR22VSL-11■4R**	—
		2NC	**AR22VSL-02■3R**	**AR22VSL-02■4R**	—
		3NC	**AR22VSL-03■3R**	**AR22VSL-03■4R**	—
	With	1NC	**AR22VSL-01■3R**	**AR22VSL-01■4R**	—
		1NO+1NC	**AR22VSL-11■3R**	**AR22VSL-11■4R**	—
		2NC	**AR22VSL-02■3R**	**AR22VSL-02■4R**	—
Unibody push-lock, turn-reset (Soft-touch 40mm dia.) KKD16-079	Without	1NC	**AR22VGF-01E3R**	—	**AR22VGF-01■1R**
		1NO+1NC	**AR22VGF-11E3R**	—	**AR22VGF-11■1R**
		2NC	**AR22VGF-02E3R**	—	**AR22VGF-02■1R**
Push-lock, turn-reset or pull reset Mushroom head (ø40) KKD16-066	Without	1NC	**AR22VQL-01E3R**		
		1NO+1NC	**AR22VQL-11E3R**		
		2NC	**AR22VQL-02E3R**		
		1NO+2NC	**AR22VQL-12E3R**		
		1NO+3NC	**AR22VQL-13E3R**		
		4NC	**AR22VQL-04E3R**		
		1NO+4NC	**AR22VQL-14E3R**		
	Without	1NC	**AR22VQL-01EAR***1		
		1NO+1NC	**AR22VQL-11EAR**		
		2NC	**AR22VQL-02EAR**		
		1NO+2NC	**AR22VQL-12EAR**		
		1NO+3NC	**AR22VQL-13EAR**		
		4NC	**AR22VQL-04EAR**		
		1NO+4NC	**AR22VQL-14EAR**		

Notes: • Button color: Red only • AR22VGF type: Lamp circuit contacts are provided, see page C1-43. • Contact arrangements indicated in the table can be supplied.
*1 Inter locked with a lamp circuit

C1

•Voltage

Replace the ■ mark by the lamp voltage code

Transformer		Code LED	Incandescent	Neon
Without	6V DC	6	—	—
	6V AC	A	—	—
	5V AC/DC	—	5	—
	12V AC/DC	B	—	—
	15V AC/DC	C	C	—
	20V AC/DC	—	D	—
	24V AC/DC	E	E	—
	110V AC	—	—	H
	120V AC	—	—	K
	220V AC	—	—	M
	240V AC	—	—	P

Notes: AR22VGF: LED 24V AC/DC and neon only

Transformer		Code LED	Incandescent
With	100-110V AC	H	H
	115-127V AC	L	L
	200-220V AC	M	M
	230-254V AC	Q	Q
	350-380V AC	S	S
	400-440V AC	T	T
	480V AC	V	V
	500-550V AC	W	W

■ Selector switches

2-position

Operator	Operation	Knob color or key removable position	Contact	Type: Switch with round bezel	Type: Switch with square bezel
Knob KKD05-024a	Maintained each 90°	Color code: B: Black (Standard) Color other than above are available (G: Green R: Red)	1NO	**AR22PR-210B**	**AR22PY-210B**
			1NC	**AR22PR-201B**	**AR22PY-201B**
			1NO+1NC	**AR22PR-211B**	**AR22PY-211B**
			2NO	**AR22PR-220B**	**AR22PY-220B**
			2NC	**AR22PR-202B**	**AR22PY-202B**
			2NO+2NC	**AR22PR-222B**	**AR22PY-222B**
	Spring return 60°		1NO	**AR22PR-010B**	**AR22PY-010B**
			1NC	**AR22PR-001B**	**AR22PY-001B**
			1NO+1NC	**AR22PR-011B**	**AR22PY-011B**
			2NO	**AR22PR-020B**	**AR22PY-020B**
			2NC	**AR22PR-002B**	**AR22PY-002B**
			2NO+2NC	**AR22PR-022B**	**AR22PY-022B**
Lever KKD05-025a	Maintained each 90°		1NO	**AR22WR-210B**	**AR22WY-210B**
			1NC	**AR22WR-201B**	**AR22WY-201B**
			1NO+1NC	**AR22WR-211B**	**AR22WY-211B**
			2NO	**AR22WR-220B**	**AR22WY-220B**
			2NC	**AR22WR-202B**	**AR22WY-202B**
			2NO+2NC	**AR22WR-222B**	**AR22WY-222B**
	Spring return 60°		1NO	**AR22WR-010B**	**AR22WY-010B**
			1NC	**AR22WR-001B**	**AR22WY-001B**
			1NO+1NC	**AR22WR-011B**	**AR22WY-011B**
			2NO	**AR22WR-020B**	**AR22WY-020B**
			2NC	**AR22WR-002B**	**AR22WY-002B**
			2NO+2NC	**AR22WR-022B**	**AR22WY-022B**
Cylindrical knob KKD18-392	Maintained each 90°		1NO	**AR22RR-210B**	**AR22RY-210B**
			1NC	**AR22RR-201B**	**AR22RY-201B**
			1NO+1NC	**AR22RR-211B**	**AR22RY-211B**
			2NO	**AR22RR-220B**	**AR22RY-220B**
			2NC	**AR22RR-202B**	**AR22RY-202B**
			2NO+2NC	**AR22RR-222B**	**AR22RY-222B**
	Spring return 60°		1NO	**AR22RR-010B**	**AR22RY-010B**
			1NC	**AR22RR-001B**	**AR22RY-001B**
			1NO+1NC	**AR22RR-011B**	**AR22RY-011B**
			2NO	**AR22RR-020B**	**AR22RY-020B**
			2NC	**AR22RR-002B**	**AR22RY-002B**
			2NO+2NC	**AR22RR-022B**	**AR22RY-022B**
Key KKD09-018	Maintained each 90°	■: Key removable position ( ): Key type *See page C1-27*	1NO	**AR22J□R-2■10( )**	**AR22JY-2■10( )**
			1NC	**AR22J□R-2■01( )**	**AR22JY-2■01( )**
			1NO+1NC	**AR22J□R-2■11( )**	**AR22JY-2■11( )**
			2NO	**AR22J□R-2■20( )**	**AR22JY-2■20( )**
			2NC	**AR22J□R-2■02( )**	**AR22JY-2■02( )**
			2NO+2NC	**AR22J□R-2■22( )**	**AR22JY-2■22( )**
	Spring return 60°		1NO	**AR22J□R-0A10( )**	**AR22JY-0A10( )**
			1NC	**AR22J□R-0A01( )**	**AR22JY-0A01( )**
			1NO+1NC	**AR22J□R-0A11( )**	**AR22JY-0A11( )**
			2NO	**AR22J□R-0A20( )**	**AR22JY-0A20( )**
			2NC	**AR22J□R-0A02( )**	**AR22JY-0A02( )**
			2NO+2NC	**AR22J□R-0A22( )**	**AR22JY-0A22( )**

Contact operation (Example)

Contact arrangement	Operator position (Left / Right)
1NO (1)	Upper contact ③ ④
1NC (1)	Upper contact ① ②
1NO+1NC (1)	Upper contact ③ ④
(2)	Lower contact ① ②
2NO+2NC (1)	Upper contact ③ ④
(3)	③ ④
(2)	Lower contact ① ②
(4)	①

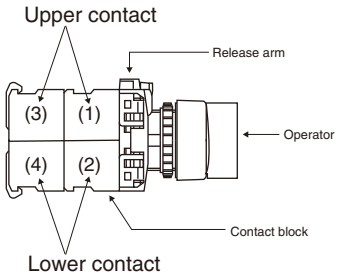

Notes: • (1) to (4): Contact block mounting position
• ①–②, ③–④: Contact block terminal No.
• Contact arrangements: *See page C1-27*

● Contact closed

• Operator
Replace the □ mark by the cylinder key type code
Standard type: Blank
Long durability type: A

3-position

Operator	Operation	Knob color	Contact	Type: Switch with round bezel	Type: Switch with square bezel	Contact operation (Example): Contact arrangement	Operator position L C R: Upper contact	Operator position L C R: Lower contact
Knob KKD05-024a	Maintained each 45°	Color code: B: Black (Standard) Color other than above are available (G: Green R: Red)	1NO+1NC 2NO 2NC 2NO+2NC	**AR22PR-311B** **AR22PR-320B** **AR22PR-302B** **AR22PR-322B**	**AR22PY-311B** **AR22PY-320B** **AR22PY-302B** **AR22PY-322B**	1NO+1NC (1) (2)	Upper contact ③ ④	Lower contact ① ②
	Spring/manual return each 45°		1NO+1NC 2NO 2NC 2NO+2NC	**AR22PR-611B** **AR22PR-620B** **AR22PR-602B** **AR22PR-622B**	**AR22PY-611B** **AR22PY-620B** **AR22PY-602B** **AR22PY-622B**			
	Spring/manual return each 45°		1NO+1NC 2NO 2NC 2NO+2NC	**AR22PR-711B** **AR22PR-720B** **AR22PR-702B** **AR22PR-722B**	**AR22PY-711B** **AR22PY-720B** **AR22PY-702B** **AR22PY-722B**	1NO+1NC (1) (2)	Upper contact ③ ④	Lower contact ① ②
	Spring return each 45°		2NO+2NC	**AR22PR-122B**	**AR22PY-122B**	2NO+2NC (1) (2) (3) (4)	Upper contact ① ② ③ ④	Lower contact ① ② ③ ④
Lever KKD05-025a	Maintained each 45°		1NO+1NC 2NO 2NC 2NO+2NC	**AR22WR-311B** **AR22WR-320B** **AR22WR-302B** **AR22WR-322B**	**AR22WY-311B** **AR22WY-320B** **AR22WY-302B** **AR22WY-322B**	1NO+1NC (1) (2)	Upper contact ③ ④	Lower contact ① ②
	Spring/manual return each 45°		1NO+1NC 2NO 2NC 2NO+2NC	**AR22WR-611B** **AR22WR-620B** **AR22WR-602B** **AR22WR-622B**	**AR22WY-611B** **AR22WY-620B** **AR22WY-602B** **AR22WY-622B**			
	Spring/manual return each 45°		1NO+1NC 2NO 2NC 2NO+2NC	**AR22WR-711B** **AR22WR-720B** **AR22WR-702B** **AR22WR-722B**	**AR22WY-711B** **AR22WY-720B** **AR22WY-702B** **AR22WY-722B**	1NO+1NC (1) (2)	Upper contact ③ ④	Lower contact ① ②
	Spring return each 45°		2NO+2NC	**AR22WR-122B**	**AR22WY-122B**	2NO+2NC (1) (2) (3) (4)	Upper contact ① ② ③ ④	Lower contact ① ② ③ ④
Cylindrical knob KKD18-392	Maintained each 45°		1NO+1NC 2NO 2NC 2NO+2NC	**AR22RR-311B** **AR22RR-320B** **AR22RR-302B** **AR22RR-322B**	**AR22RY-311B** **AR22RY-320B** **AR22RY-302B** **AR22RY-322B**	1NO+1NC (1) (2)	Upper contact ③ ④	Lower contact ① ②
	Spring/manual return each 45°		1NO+1NC 2NO 2NC 2NO+2NC	**AR22RR-611B** **AR22RR-620B** **AR22RR-602B** **AR22RR-622B**	**AR22RY-611B** **AR22RY-620B** **AR22RY-602B** **AR22RY-622B**			
	Spring/manual return each 45°		1NO+1NC 2NO 2NC 2NO+2NC	**AR22RR-711B** **AR22RR-720B** **AR22RR-702B** **AR22RR-722B**	**AR22RY-711B** **AR22RY-720B** **AR22RY-702B** **AR22RY-722B**	1NO+1NC (1) (2)	Upper contact ③ ④	Lower contact ① ②
	Spring return each 45°		2NO+2NC	**AR22RR-122B**	**AR22RY-122B**	2NO+2NC (1) (2) (3) (4)	Upper contact ① ② ③ ④	Lower contact ① ② ③ ④

Operator	Operation	Key removable position	Contact	Type Switch with round bezel	Switch with square bezel	Contact operation (Example) Contact arrangement	Operator position L C R	Operator position L C R
Key KKD09-018	Maintained each 45°	■: Key removable position ( ): Key type	1NO+1NC 2NO 2NC 2NO+2NC	**AR22J□R-3■11( )** **AR22J□R-3■20( )** **AR22J□R-3■02( )** **AR22J□R-3■22( )**	**AR22JY-3■11( )** **AR22JY-3■20( )** **AR22JY-3■02( )** **AR22JY-3■22( )**	1NO+1NC (1) (2)	Upper contact ③ ④	Lower contact ① ②
	Spring/ manual return each 45°		1NO+1NC 2NO 2NC 2NO+2NC	**AR22J□R-6■11( )** **AR22J□R-6■20( )** **AR22J□R-6■02( )** **AR22J□R-6■22( )**	**AR22JY-6■11( )** **AR22JY-6■20( )** **AR22JY-6■02( )** **AR22JY-6■22( )**			
	Spring/ manual return each 45°		1NO+1NC 2NO 2NC 2NO+2NC	**AR22J□R-7■11( )** **AR22J□R-7■20( )** **AR22J□R-7■02( )** **AR22J□R-7■22( )**	**AR22JY-7■11( )** **AR22JY-7■20( )** **AR22JY-7■02( )** **AR22JY-7■22( )**	1NO+1NC (1) (2)	Upper contact ③ ④	Lower contact ① ②
	Spring return each 45°		2NO+2NC	**AR22J□R-1E22( )**	**AR22JY-1E22( )**	2NO+2NC (1) (2) (3) (4)	Upper contact ① ② ③ ④	Lower contact ① ② ③ ④

Notes: • Operator position L:Left, C:Center, R:Right
• (1) to (4): Contact block mounting position
• ①–②, ③–④: Contact block terminal No.

● Contact closed

• Contact arrangements

Contact arrangements other than above are available

Contact arrangement	1NO	1NC	1NO+1NC	2NO	2NC	3NO	3NC
Code	10	01	11	20	02	30	03

Contact arrangement	2NO+2NC	4NO	4NC	5NO	5NC	3NO+3NC
Code	22	40	04	50	05	33

• Available numbers of contact blocks

Mainted	Spring return Spring/manual return
6-contact block	4-contact block

• Key removable positions

Code	A	B	C	D	E	F	G
Removable position	45° 45°	45° 45°	45° 45°	45° 45°	45° 45°	45° 45°	45° 45°
AR22JR-2	●	●	–	●	–	–	–
AR22JR-0	●	–	–	–	–	–	–
AR22JR-3	●	●	●	●	●	●	●
AR22JR-6	–	–	–	●	●	●	–
AR22JR-7	●	–	–	–	●	–	●
AR22JR-1	–	–	–	–	●	–	–

●: Available –: Not available

• Position of contact block

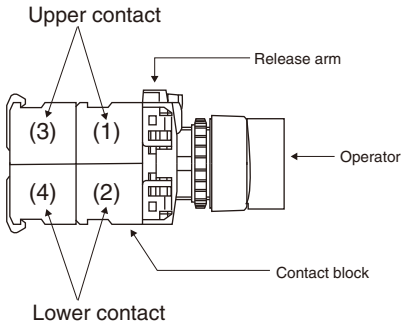

• Key code No.

Replace the ( ) mark with one of the following key code.
A, B, C, D, E and F
Standard key code is A.

• Operator

Replace the □ mark by the cylinder key type code
Standard type: Blank
Long durability type: A

■ Selector switches (control type)

3-position

Operator	Operation	Knob color or key removable position	Contact arrangement	Type Switch with round bezel	Switch with square bezel
Knob KKD05-027a	Maintained each 45°	Color code: B: Black (Standard) Color other than above are available (G: Green R: Red)	Replace the ■ mark by the contact arrangement code (shown on next page).	**AR22PCR-3■B**	**AR22PCY-3■B**
	Spring/manual return each 45°			**AR22PCR-6■B**	**AR22PCY-6■B**
	Spring/manual return each 45°			**AR22PCR-7■B**	**AR22PCY-7■B**
	Spring return each 45°			**AR22PCR-1■B**	**AR22PCY-1■B**
Lever KKD05-028a	Maintained each 45°		Replace the ■ mark by the contact arrangement code (shown on next page).	**AR22WCR-3■B**	**AR22WCY-3■B**
	Spring/manual return each 45°			**AR22WCR-6■B**	**AR22WCY-6■B**
	Spring/manual return each 45°			**AR22WCR-7■B**	**AR22WCY-7■B**
	Spring return each 45°			**AR22WCR-1■B**	**AR22WCY-1■B**
Cylindrical knob AF94-433	Maintained each 45°		Replace the ■ mark by the contact arrangement code (shown on next page).	**AR22RCR-3■B**	**AR22RCY-3■B**
	Spring/manual return each 45°			**AR22RCR-6■B**	**AR22RCR-6■B**
	Spring/manual return each 45°			**AR22RCR-7■B**	**AR22RCY-7■B**
	Spring return each 45°			**AR22RCR-1■B**	**AR22RCY-1■B**
Key KKD09-016	Maintained each 45°	Replace the□ mark by the key removable position code: A, B, C, D, E F or G	Replace the ■ mark by the contact arrangement code (shown on next page).	**AR22JCR-3□■( )**	**AR22JCY-3■□( )**
	Spring/manual return each 45°			**AR22JCR-6□■( )**	**AR22JCY-6■□( )**
	Spring/manual return each 45°			**AR22JCR-7□■( )**	**AR22JCY-7■□( )**
	Spring return each 45°			**AR22JCR-1E■( )**	**AR22JCY-1E■( )**

- **Key removable positions**

Code	A	B	C	D	E	F	G
Removable position							
AR22JCR-3	●	●	●	●	●	●	●
AR22JCR-6	–	–	–	●	●	●	–
AR22JCR-7	●	–	–	–	●	–	●
AR22JCR-1	–	–	–	–	●	–	–

●: Available –: Not available

- **Key code No.**
  Replace the ( ) mark with one of the following key code.
  A, B, C, D, E and F
  Standard key code is A.

• Contact arrangement code (Typical example)

Contact arrangement	Contact arrangement code	Contact operation: Contact block: Mounting position	Contact block: Type	Operator position: Left	Operator position: Center	Operator position: Right
2NC	01F	(1)	NC	▬	▬	
		(2)	NC		▬	▬
		–	–	–	–	–
		–	–	–	–	–
2NO+2NC	014	(1)	NC	▬	▬	
		(2)	NC		▬	▬
		(3)	NO			●
		(4)	NO	●		
4NC	01J	(1)	NC	▬	▬	
		(2)	NC		▬	▬
		(3)	NC	▬	▬	
		(4)	NC		▬	▬
2NO+2NC	024	(1)	NC	▬	▬	
		(2)	NC		●	
		(3)	NO			●
		(4)	NO	●		●
2NO+2NC	03C* (Maintained only)	(1)	NC	▬	▬	
		(2)	NC			●
		(3)	NO			●
		(4)	NO	●		
2NO+2NC	044*	(1)	NC	▬	▬	
		(2)	NC		●	
		(3)	NO			●
		(4)	NO	●		
2NO+2NC	054	(1)	NC	▬	▬	
		(2)	NC		●	
		(3)	NO			●
		(4)	NO			●

Contact arrangement	Contact arrangement code	Contact operation: Contact block: Mounting position	Contact block: Type	Operator position: Left	Operator position: Center	Operator position: Right
2NO+2NC	064	(1)	NC		▬	▬
		(2)	NC		●	
		(3)	NO	●		
		(4)	NO	●		●
1NO+1NC	07F	(1)	NC		▬	▬
		(2)	NO			●
		–	–	–	–	–
		–	–	–	–	–
2NO+2NC	07C* (Maintained only)	(1)	NC		▬	▬
		(2)	NC			●
		(3)	NO	●		
		(4)	NO	●		
2NO+2NC	084	(1)	NC		▬	▬
		(2)	NC		●	
		(3)	NO	●		
		(4)	NO	●		
2NO+2NC	094*	(1)	NC		▬	▬
		(2)	NC		●	
		(3)	NO	●		
		(4)	NO			●
2NO+2NC	104	(1)	NC		●	
		(2)	NC		●	
		(3)	NO	●		●
		(4)	NO	●		●
2NO+2NC	11C* (Maintained only)	(1)	NC		●	
		(2)	NC			●
		(3)	NO	●		●
		(4)	NO	●		

Notes: ●: Contact closed Blank: Contact open
* There may be some overlap in the contact when switching between notches.

• Position of contact block

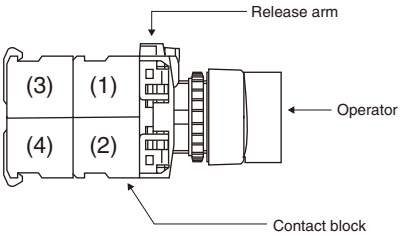

• Contact arrangement code (Typical example)

Contact arrangement	Contact arrangement code	Contact operation: Contact block: Mounting position	Contact block: Type	Operator position: Left	Center	Right
2NO+2NC	124*	(1)	NC		●	
		(2)	NC		●	
		(3)	NO	●		●
		(4)	NO	●		
2NO+2NC	134*	(1)	NC		●	
		(2)	NC		●	
		(3)	NO	●		●
		(4)	NO			●
3NO+1NC	14D* (Maintained only)	(1)	NO	●		
		(2)	NC		●	
		(3)	NO	●		
		(4)	NO			●
3NO+1NC	15A*	(1)	NO			●
		(2)	NC		●	
		(3)	NO			●
		(4)	NO	●		
2NO+2NC	164	(1)	NC		●	
		(2)	NC		●	
		(3)	NO	●		
		(4)	NO	●		
2NO+2NC	174*	(1)	NC		●	
		(2)	NC		●	
		(3)	NO	●		
		(4)	NO			●
2NO+2NC	184	(1)	NC		●	
		(2)	NC		●	
		(3)	NO			●
		(4)	NO			●

Contact arrangement	Contact arrangement code	Contact operation: Contact block: Mounting position	Contact block: Type	Operator position: Left	Center	Right
2NO+2NC	194	(1)	NC		▬	▬
		(2)	NC	▬	▬	
		(3)	NO	●		
		(4)	NO			●
4NO	20B	(1)	NO			●
		(2)	NO	●		
		(3)	NO			●
		(4)	NO	●		

Notes: ●: Contact closed Blank: Contact open
* There may be some overlap in the contact when switching between notches.

• Position of contact block

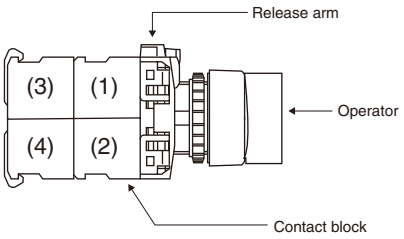

4, 5-position

Operator	Contact (The following contact is only available.)	Operation	Knob color	Contact arrangement	Type Switch with round bezel	Switch with square bezel
Knob KKD05-027a	2NO+2NC	4-position maintained	Color code: B: Black (Standard) Color other than above are available (G: Green R: Red)	Replace the ■ mark by the contact arrangement code (shown below)	**AR22PCR-4■B**	**AR22PCY-4■B**
		5-position maintained			**AR22PCR-5■B**	**AR22PCY-5■B**
Lever KKD05-028a	2NO+2NC	4-position maintained			**AR22WCR-4■B**	**AR22WCY-4■B**
		5-position maintained			**AR22WCR-5■B**	**AR22WCY-5■B**
Cylindrical knob AF94-433	2NO+2NC	4-position maintained			**AR22RCR-4■B**	**AR22RCY-4■B**
		5-position maintained			**AR22RCR-5■B**	**AR22RCY-5■B**

● Contact arrangement code

Contact arrangement Position	Contact arrangement	Contact arrangement code	Contact operation: Contact block: Mounting position	Contact block: Type	Operator position 1	2	3	4	5
4-position	2NO+2NC	41C* (Maintained only)	(1)	NC			●		
			(2)	NC	●				
			(3)	NO		●			
			(4)	NO				●	
5-position	2NO+2NC	51C* (Maintained only)	(1)	NC				●	
			(2)	NC		●			
			(3)	NO	●				
			(4)	NO					●

Notes: ●: Contact closed
* There may be some overlap in the contact when switching between notches.

● Position of contact block

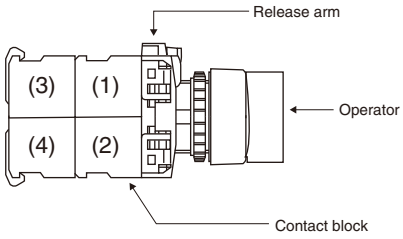

Operator position

4-position **5-position**

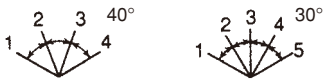

■ Illuminated selector switches

2-position

Operator	Operation	Contact	LED lamp		Incandescent lamp	
			Transformer	Type	Transformer	Type
Knob KKD05-030a	Maintained each 90°	1NO 1NC 1NO+1NC 2NO+2NC	Without	**AR22PL-210■3□** **AR22PL-201■3□** **AR22PL-211■3□** **AR22PL-222■3□**	Without	**AR22PL-210■4□** **AR22PL-201■4□** **AR22PL-211■4□** **AR22PL-222■4□**
		1NO 1NC 1NO+1NC 2NO	With	**AR22PL-210■3□** **AR22PL-201■3□** **AR22PL-211■3□** **AR22PL-220■3□**	With	**AR22PL-210■4□** **AR22PL-201■4□** **AR22PL-211■4□** **AR22PL-220■4□**
	Spring return 60°	1NO 1NC 1NO+1NC 2NO	Without	**AR22PL-010■3□** **AR22PL-001■3□** **AR22PL-011■3□** **AR22PL-020■3□**	Without	**AR22PL-010■4□** **AR22PL-001■4□** **AR22PL-011■4□** **AR22PL-020■4□**
		1NO 1NC 1NO+1NC 2NO	With	**AR22PL-010■3□** **AR22PL-001■3□** **AR22PL-011■3□** **AR22PL-020■3□**	With	**AR22PL-010■4□** **AR22PL-001■4□** **AR22PL-011■4□** **AR22PL-020■4□**
Knob with square bezel KKD18-380	Maintained each 90°	1NO 1NC 1NO+1NC 2NO+2NC	Without	**AR22PP-210■3□** **AR22PP-201■3□** **AR22PP-211■3□** **AR22PP-222■3□**	Without	**AR22PP-210■4□** **AR22PP-201■4□** **AR22PP-211■4□** **AR22PP-222■4□**
		1NO 1NC 1NO+1NC 2NO	With	**AR22PP-210■3□** **AR22PP-201■3□** **AR22PP-211■3□** **AR22PP-220■3□**	With	**AR22PP-210■4□** **AR22PP-201■4□** **AR22PP-211■4□** **AR22PP-220■4□**
	Spring return 60°	1NO 1NC 1NO+1NC 2NO	Without	**AR22PP-010■3□** **AR22PP-001■3□** **AR22PP-011■3□** **AR22PP-020■3□**	Without	**AR22PP-010■4□** **AR22PP-001■4□** **AR22PP-011■4□** **AR22PP-020■4□**
		1NO 1NC 1NO+1NC 2NO	With	**AR22PP-010■3□** **AR22PP-001■3□** **AR22PP-011■3□** **AR22PP-020■3□**	With	**AR22PP-010■4□** **AR22PP-001■4□** **AR22PP-011■4□** **AR22PP-020■4□**

3-position

Operator	Operation	Contact	LED lamp		Incandescent lamp	
			Transformer	Type	Transformer	Type
Knob KKD05-030a	Maintained each 45°	1NO+1NC 2NO+2NC	Without	**AR22PL-311■3□** **AR22PL-322■3□**	Without	**AR22PL-311■4□** **AR22PL-322■4□**
		1NO+1NC	With	**AR22PL-311■3□**		**AR22PL-311■4□**
	Spring/manual return each 45°	1NO+1NC 1NO+1NC	Without With	**AR22PL-611■3□** **AR22PL-611■3□**	Without With	**AR22PL-611■4□** **AR22PL-611■4□**
		1NO+1NC 1NO+1NC	Without With	**AR22PL-711■3□** **AR22PL-711■3□**	Without With	**AR22PL-711■4□** **AR22PL-711■4□**
Knob with square bezel KKD18-380	Maintained each 45°	1NO+1NC 2NO+2NC	Without	**AR22PP-311■3□** **AR22PP-322■3□**	Without	**AR22PP-311■4□** **AR22PP-322■4□**
		1NO+1NC	With	**AR22PP-311■3□**		**AR22PP-311■4□**
	Spring/manual return each 45°	1NO+1NC 1NO+1NC	Without With	**AR22PP-611■3□** **AR22PP-611■3□**	Without With	**AR22PP-611■4□** **AR22PP-611■4□**
		1NO+1NC 1NO+1NC	Without With	**AR22PP-711■3□** **AR22PP-711■3□**	Without With	**AR22PP-711■4□** **AR22PP-711■4□**

Note: □, ■ *See page C1-33*

• Replace the ■ mark by the following lamp voltage code

Transformer	Voltage	Code LED	Incandescent
Without	5V AC/DC	–	5
	6V DC	6	–
	6V AC	A	–
	12V AC/DC	B	–
	15V AC/DC	C	C
	20V AC/DC	–	D
	24V AC/DC	E	E
With	100-110V AC	H	H
	115-127V AC	L	L
	200-220V AC	M	M
	230-254V AC	Q	Q
	350-380V AC	S	S
	400-440V AC	T	T
	480V AC	V	V
	500-550V AC	W	W

• Replace the □ mark by the following knob color code

Color	Green	Red	White	Blue	Yellow	Orange
Code	G	R	W	S	Y	A

• Up to 4-contact of contact arrangement can be made. Available numbers of contacts are as follow.

No. of position	Operation	Without transformer	With transformer
2-position	Maintained	4-contact	3-contact
	Spring return	3-contact	2-contact
3-position	Maintained	4-contact	3-contact
	Spring/manual return	3-contact	2-contact

● Contact arrangement and operator position

2-position

Transformer	Contact arrangement	Contact block		Operator position	
		Mounting position	Type	Left	Right
With/without	1NO	(1)	NO	–	●
With/without	1NC	(1)	NC	●	–
Without	1NO+1NC	(1)	NO	–	●
		(2)	NC	●	–
With	1NO+1NC	(1)	NC	●	–
		(2)	NO	–	●
With/without	2NO	(1)	NO	–	●
		(2)	NO	–	●
Without	2NO+2NC *1	(1)	NO	–	●
		(2)	NC	●	–
		(3)	NO	–	●
		(4)	NC	●	–

Notes: *1 : AR22PL-2, AR22PP-2
● : Contact closed, – : Contact open

3-position

Transformer	Contact arrangement	Contact block		Operator position		
		Mounting position	Type	Left	Center	Right
Without	1NO+1NC *1	(1)	NO	●	–	–
		(2)	NC	–	–	●
	1NO+1NC *2	(1)	NO	–	–	●
		(2)	NC	●	–	–
	2NO+2NC *3	(1)	NO	●	–	–
		(2)	NC	–	–	●
		(3)	NO	●	–	–
		(4)	NC	–	–	●
With	1NO+1NC *1	(1)	NC	–	–	●
		(2)	NO	●	–	–
	1NO+1NC *2	(1)	NC	●	–	–
		(2)	NO	–	–	●

Notes: *1 : AR22PL-3, 6 AR22PP-3, 6 *3 : AR22PL-3 AR22PP-3
*2 : AR22PL-7, AR22PP-7
● : Contact closed, – : Contact open

● Position of contact block

Without transformer

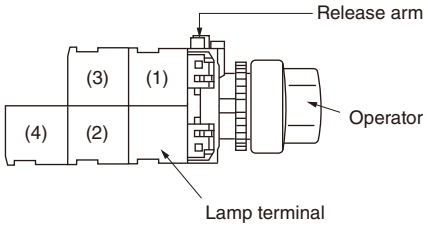

With transformer

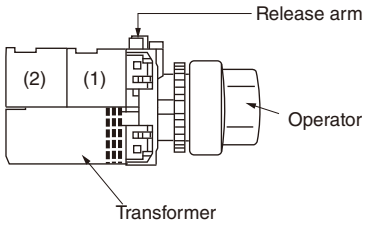

■ Pilot lights/standard

Lens	Transformer	LED lamp Lamp voltage	Type	Incandescent lamp Lamp voltage	Type
Dome KKD05-182	Without	6V AC	**DR22D0L-A3□**	5.5V AC/DC	**DR22D0L-54□**
		6V DC	**DR22D0L-63□**	—	**—**
		12V AC/DC	**DR22D0L-B3□**	15V AC/DC	**DR22D0L-C4□**
		24V AC/DC	**DR22D0L-E3□**	24V AC/DC	**DR22D0L-E4□**
	With	100–110V AC	**DR22D0L-H3□**	100–110V AC	**DR22D0L-H4□**
		200–220V AC	**DR22D0L-M3□**	200–220V AC	**DR22D0L-M4□**
Extended round KKD05-180	Without	6V AC	**DR22E3L-A3□**	5.5V AC/DC	**DR22E3L-54□**
		6V DC	**DR22E3L-63□**	—	**—**
		12V AC/DC	**DR22E3L-B3□**	15V AC/DC	**DR22E3L-C4□**
		24V AC/DC	**DR22E3L-E3□**	24V AC/DC	**DR22E3L-E4□**
	With	100–110V AC	**DR22E3L-H3□**	100–110V AC	**DR22E3L-H4□**
		200–220V AC	**DR22E3L-M3□**	200–220V AC	**DR22E3L-M4□**
Faceted KKD18-409	Without	6V AC	**DR22K0L-A3□**	5.5V AC/DC	**DR22K0L-54□**
		6V DC	**DR22K0L-63□**	—	**—**
		12V AC/DC	**DR22K0L-B3□**	15V AC/DC	**DR22K0L-C4□**
		24V AC/DC	**DR22K0L-E3□**	24V AC/DC	**DR22K0L-E4□**
	With	100–110V AC	**DR22K0L-H3□**	100–110V AC	**DR22K0L-H4□**
		200–220V AC	**DR22K0L-M3□**	200–220V AC	**DR22K0L-M4□**
Flush square KKD05-178	Without	6V AC	**DR22F3M-A3□**	5.5V AC/DC	**DR22F3M-54□**
		6V DC	**DR22F3M-63□**	—	**—**
		12V AC/DC	**DR22F3M-B3□**	15V AC/DC	**DR22F3M-C4□**
		24V AC/DC	**DR22F3M-E3□**	24V AC/DC	**DR22F3M-E4□**
	With	100–110V AC	**DR22F3M-H3□**	100–110V AC	**DR22F3M-H4□**
		200–220V AC	**DR22F3M-M3□**	200–220V AC	**DR22F3M-M4□**
Flush square (Transparent lens) KKD18-407	Without	6V AC	**DR22F4M-A3□**	5.5V AC/DC	**DR22F4M-54□**
		6V DC	**DR22F4M-63□**	—	**—**
		12V AC/DC	**DR22F4M-B3□**	15V AC/DC	**DR22F4M-C4□**
		24V AC/DC	**DR22F4M-E3□**	24V AC/DC	**DR22F4M-E4□**
	With	100–110V AC	**DR22F4M-H3□**	100–110V AC	**DR22F4M-H4□**
		200–220V AC	**DR22F4M-M3□**	200–220V AC	**DR22F4M-M4□**
Flush square (12mm high frame) KKD18-408	Without	6V AC	**DR22F5M-A3□**	5.5V AC/DC	**DR22F5M-54□**
		6V DC	**DR22F5M-63□**	—	**—**
		12V AC/DC	**DR22F5M-B3□**	15V AC/DC	**DR22F5M-C4□**
		24V AC/DC	**DR22F5M-E3□**	24V AC/DC	**DR22F5M-E4□**
	With	100–110V AC	**DR22F5M-H3□**	100–110V AC	**DR22F5M-H4□**
		200–220V AC	**DR22F5M-E3□**	200–220V AC	**DR22F5M-M4□**
Extended square KKD18-402	Without	6V AC	**DR22E3M-A3□**	5.5V AC/DC	**DR22E3M-54□**
		6V DC	**DR22E3M-63□**	—	**—**
		12V AC/DC	**DR22E3M-B3□**	15V AC/DC	**DR22E3M-C4□**
		24V AC/DC	**DR22E3M-E3□**	24V AC/DC	**DR22E3M-E4□**
	With	100–110V AC	**DR22E3M-H3□**	100–110V AC	**DR22E3M-H4□**
		200–220V AC	**DR22E3M-M3□**	200–220V AC	**DR22E3M-M4□**
Flush rectangular AF96-237	Without	6V AC	**DR22E3N-A3□**	5.5V AC/DC	**DR22E3N-54□**
		6V DC	**DR22E3N-63□**	—	**—**
		12V AC/DC	**DR22E3N-B3□**	15V AC/DC	**DR22E3N-C4□**
		24V AC/DC	**DR22E3N-E3□**	24V AC/DC	**DR22E3N-E4□**
	With	100–110V AC	**DR22E3N-H3□**	100–110V AC	**DR22E3N-H4□**
		200–220V AC	**DR22E3N-M3□**	200–220V AC	**DR22E3N-M4□**
Extended round with square bezel KKD18-404	Without	6V AC	**DR22E3P-A3□**	5.5V AC/DC	**DR22E3P-54□**
		6V DC	**DR22E3P-63□**	—	**—**
		12V AC/DC	**DR22E3P-B3□**	15V AC/DC	**DR22E3P-C4□**
		24V AC/DC	**DR22E3P-E3□**	24V AC/DC	**DR22E3P-E4□**
	With	100–110V AC	**DR22E3P-H3□**	100–110V AC	**DR22E3P-H4□**
		200–220V AC	**DR22E3P-M3□**	200–220V AC	**DR22E3P-M4□**

Note: □ *See page C1-37*

■ Pilot lights/short-body without transformer

Lens	LED lamp		Incandescent lamp	
	Lamp voltage	Type	Lamp voltage	Type
Dome KKD05-033	5.5V AC/DC	—	5.5V AC/DC	**DR22D0L-58□**
	6V AC 6V DC 12V AC/DC	**DR22D0L-A9□** **DR22D0L-69□** **DR22D0L-B9□**	6V AC 6V DC 15V AC/DC	— — **DR22D0L-C8□**
	24V AC/DC	**DR22D0L-E9□**	24V AC/DC	**DR22D0L-E8□**
Extended round KKD05-037a	5.5V AC/DC	—	5.5V AC/DC	**DR22E3L-58□**
	6V AC 6V DC 12V AC/DC	**DR22E3L-A9□** **DR22E3L-69□** **DR22E3L-B9□**	6V AC 6V DC 15V AC/DC	— — **DR22E3L-C8□**
	24V AC/DC	**DR22E3L-E9□**	24V AC/DC	**DR22E3L-E8□**
Faceted AF98-89	5.5V AC/DC	—	5.5V AC/DC	**DR22K0L-58□**
	6V AC 6V DC 12V AC/DC	**DR22K0L-A9□** **DR22K0L-69□** **DR22K0L-B9□**	6V AC 6V DC 15V AC/DC	— — **DR22K0L-C8□**
	24V AC/DC	**DR22K0L-E9□**	24V AC/DC	**DR22K0L-E8□**
Flush square KKD05-041b	5.5V AC/DC	—	5.5V AC/DC	**DR22F3M-58□**
	6V AC 6V DC 12V AC/DC	**DR22F3M-A9□** **DR22F3M-69□** **DR22F3M-B9□**	6V AC 6V DC 15V AC/DC	— — **DR22F3M-C8□**
	24V AC/DC	**DR22F3M-E9□**	24V AC/DC	**DR22F3M-E8□**
Flush square (Transparent lens) KKD05-041b	5.5V AC/DC	—	5.5V AC/DC	**DR22F4M-58□**
	6V AC 6V DC 12V AC/DC	**DR22F4M-A9□** **DR22F4M-69□** **DR22F4M-B9□**	6V AC 6V DC 15V AC/DC	— — **DR22F4M-C8□**
	24V AC/DC	**DR22F4M-E9□**	24V AC/DC	**DR22F4M-E8□**
Flush square (12mm high frame) 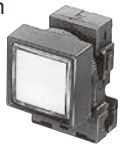 AF98-94	5.5V AC/DC	—	5.5V AC/DC	**DR22F5M-58□**
	6V AC 6V DC 12V AC/DC	**DR22F5M-A9□** **DR22F5M-69□** **DR22F5M-B9□**	6V AC 6V DC 15V AC/DC	— — **DR22F5M-C8□**
	24V AC/DC	**DR22F5M-E9□**	24V AC/DC	**DR22F5M-E8□**
Extended square 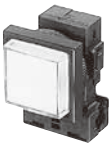 AF98-93	5.5V AC/DC	—	5.5V AC/DC	**DR22E3M-58□**
	6V AC 6V DC 12V AC/DC	**DR22E3M-A9□** **DR22E3M-69□** **DR22E3M-B9□**	6V AC 6V DC 15V AC/DC	— — **DR22E3M-C8□**
	24V AC/DC	**DR22E3M-E9□**	24V AC/DC	**DR22E3M-E8□**
Flush rectangular KK02-234B	5.5V AC/DC	—	5.5V AC/DC	**DR22E3N-58□**
	6V AC 6V DC 12V AC/DC	**DR22E3N-A9□** **DR22E3N-69□** **DR22E3N-B9□**	6V AC 6V DC 15V AC/DC	— — **DR22E3N-C8□**
	24V AC/DC	**DR22E3N-E9□**	24V AC/DC	**DR22E3N-E8□**
Extended round with square bezel AF98-91	5.5V AC/DC	—	5.5V AC/DC	**DR22E3P-58□**
	6V AC 6V DC 12V AC/DC	**DR22E3P-A9□** **DR22E3P-69□** **DR22E3P-B9□**	6V AC 6V DC 15V AC/DC	— — **DR22E3P-C8□**
	24V AC/DC	**DR22E3P-E9□**	24V AC/DC	**DR22E3P-E8□**

Note: □ *See page C1-37*

■ Pilot lights/short-body with transformer

Lens	LED lamp		Incandescent lamp	
	Lamp voltage	Type	Lamp voltage	Type
Dome AF97-137	100–110V AC 200–220V AC	**DR22D0L-H9□** **DR22D0L-M9□**	100–110V AC 200–220V AC	**DR22D0L-H8□** **DR22D0L-M8□**
Extended round AF97-138	100–110V AC 200–220V AC	**DR22E3L-H9□** **DR22E3L-M9□**	100–110V AC 200–220V AC	**DR22E3L-H8□** **DR22E3L-M8□**
Faceted KK02-130A	100–110V AC 200–220V AC	**DR22K0L-H9□** **DR22K0L-M9□**	100–110V AC 200–220V AC	**DR22K0L-H8□** **DR22K0L-M8□**
Flush square AF97-134	100–110V AC 200–220V AC	**DR22F3M-H9□** **DR22F3M-M9□**	100–110V AC 200–220V AC	**DR22F3M-H8□** **DR22F3M-M8□**
Flush square (Transparent lens) AF97-133	100–110V AC 200–220V AC	**DR22F4M-H9□** **DR22F4M-M9□**	100–110V AC 200–220V AC	**DR22F4M-H8□** **DR22F4M-M8□**
Flush square (12mm high frame) 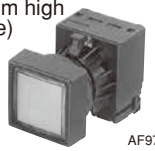 AF97-136	100–110V AC 200–220V AC	**DR22F5M-H9□** **DR22F5M-M9□**	100–110V AC 200–220V AC	**DR22F5M-H8□** **DR22F5M-M8□**
Extended square KK02-134A	100–110V AC 200–220V AC	**DR22E3M-H9□** **DR22E3M-M9□**	100–110V AC 200–220V AC	**DR22E3M-H8□** **DR22E3M-M8□**
Flush rectangular KK02-235B	100–110V AC 200–220V AC	**DR22E3N-H9□** **DR22E3N-M9□**	100–110V AC 200–220V AC	**DR22E3N-H8□** **DR22E3N-M8□**
Extended round with square bezel AF97-135	100–110V AC 200–220V AC	**DR22E3P-H9□** **DR22E3P-M9□**	100–110V AC 200–220V AC	**DR22E3P-H8□** **DR22E3P-M8□**

Note: □ *See page C1-37*

- **Lens color**

Replace the □ mark by the following lens color code

Color	Green	Red	White	Blue	Yellow	Orange
Code	G	R	W	S	Y	A

- **Lamp voltage**

Available lamp voltage are as follow.

Description	Voltage	Code			
		Standard type		Short-body type	
		LED	Incandescent	LED	Incandescent
Without transformer	5.5V AC/DC	–	54	–	58
	6V AC	A3	–	A9	–
	6V DC	63	–	69	–
	12V AC/DC	B3	–	B9	–
	15V AC/DC	C3	C4	C9	C8
	20V AC/DC	–	D4	–	D8
	24V AC/DC	E3	E4	E9	E8
With transformer	100-110V AC	H3	H4	H9	H8
	115-127V AC	L3	L4	L9	L8
	200-220V AC	M3	M4	M9	M8
	230-254V AC	Q3	Q4	–	–
	350-380V AC	S3	S4	–	–
	400-440V AC	T3	T4	–	–
	480V AC	V3	V4	–	–
	500-550V AC	W3	W4	–	–
With resistor unit	110V DC	H7	–	–	–

■ Joy stick selector switches

Handle	Terminal	Operating directions	Contact arrangement	Type: Manual return	Type: Spring return
Ball type without lock KKD18-363	Screw	↕	1NO×2	**AR22A0N-A0A0B**	**AR22A5N-A0A0B**
			1NO + 1NC×2	**AR22A0N-1010B**	**AR22A5N-1010B**
		↕↔	1NO×4	**AR22A0N-AAAAB**	**AR22A5N-AAAAB**
			1NO + 1NC×4	**AR22A0N-1111B**	**AR22A5N-1111B**
	Solder/tab	↕	1NO + 1NC×2	**AR22A0H-1010B**	**AR22A5H-1010B**
			2NO + 2NC×2	**AR22A0H-2020B**	**AR22A5H-2020B**
		↕↔	1NO + 1NC×4	**AR22A0H-1111B**	**AR22A5H-1111B**
			2NO + 2NC×4	**AR22A0H-2222B**	**AR22A5H-2222B**
Ball type with lock KKD19-002	Screw	↕	1NO×2	**AR22A1N-A0A0B**	**AR22A6N-A0A0B**
			1NO + 1NC×2	**AR22A1N-1010B**	**AR22A6N-1010B**
		↕↔	1NO×4	**AR22A1N-AAAAB**	**AR22A6N-AAAAB**
			1NO + 1NC×4	**AR22A1N-1111B**	**AR22A6N-1111B**
	Solder/tab	↕	1NO + 1NC×2	**AR22A1H-1010B**	**AR22A6H-1010B**
			2NO + 2NC×2	**AR22A1H-2020B**	**AR22A6H-2020B**
		↕↔	1NO + 1NC×4	**AR22A1H-1111B**	**AR22A6H-1111B**
			2NO + 2NC×4	**AR22A1H-2222B**	**AR22A6H-2222B**
Rubber cap type without lock KKD18-365	Screw	↕	1NO×2	**AR22A2N-A0A0B**	**AR22A7N-A0A0B**
			1NO + 1NC×2	**AR22A2N-1010B**	**AR22A7N-1010B**
		↕↔	1NO×4	**AR22A2N-AAAAB**	**AR22A7N-AAAAB**
			1NO + 1NC×4	**AR22A2N-1111B**	**AR22A7N-1111B**
	Solder/tab	↕	1NO + 1NC×2	**AR22A2H-1010B**	**AR22A7H-1010B**
			2NO + 2NC×2	**AR22A2H-2020B**	**AR22A7H-2020B**
		↕↔	1NO + 1NC×4	**AR22A2H-1111B**	**AR22A7H-1111B**
			2NO + 2NC×4	**AR22A2H-2222B**	**AR22A7H-2222B**

• Operating direction

- Directions other than those shown in the table above can be provided.
- For types AR22A□N-1 2 3 4 B, designate the contact arrangement codes for the necessary operating directions (1: Upper, 2: Right, 3: Lower, 4: Left). Designate "0" for unnecessary directions.

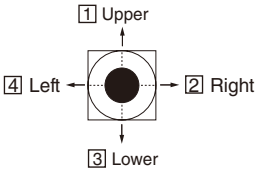

• Contact arrangement

Contact arrangement		–	1NO	1NC	1NO+1NC	2NO	2NC	2NO+2NC
Manual return Spring return	Screw	0	A	B	1	D	E	–
	Solder/Tab	0	–	–	1	–	–	2

- Spring/manual return are also available, contact FUJI.

■ Buzzers

Sound	Description	Transformer	Operating voltage	Type
Electronic sound KKD08-053	• LED operation indicator (Red) • Intermittent/continuous sound selection • Sound level: 90dB (0.1m) 70dB (1m)	Without	6V DC 12 to 24V AC/DC	**DR22B5-6B** **DR22B5-EB**
		With	100 to 110V AC 200 to 220V AC	**DR22B5-HB** **DR22B5-MB**
Electronic sound (IP54) KKD18-397	• Intermittent/continuous sound selection • Sound level: 80dB (0.1m) 60dB (1m)	Without	6V DC 12 to 24V AC/DC	**DR22B8-6B** **DR22B8-EB**
		With	100 to 110V AC 200 to 220V AC	**DR22B8-HB** **DR22B8-MB**

Notes: • Intermittent/continuous sound selection (DR22B5, B8)
See the "Short-circuit terminal" in the dimensions diagram on the C1-49 page, and select as follows:
• Short-circuit terminal mounted ⟶ Intermittent sound
• Short-circuit terminal not mounted ⟶ Continuous sound

AR22 and DR22 Dimensions

■ Dimensions, mm
• Illuminated pushbutton switches

Flush/Extended

With transformer

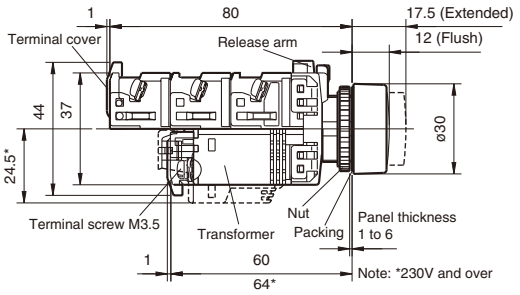

AR22F0L, F5L
AR22E0L, E5L

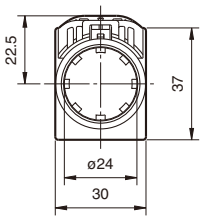

AR22F0M, F5M
AR22E0M, E5M

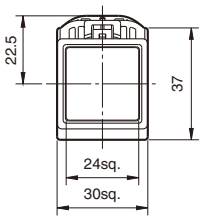

AR22F0P, F5P
AR22E0P, E5P

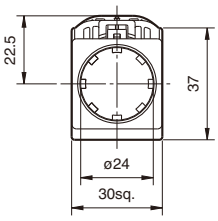

Without transformer

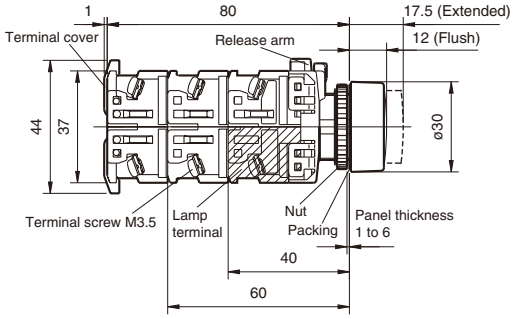

Mushroom (40mm dia.)

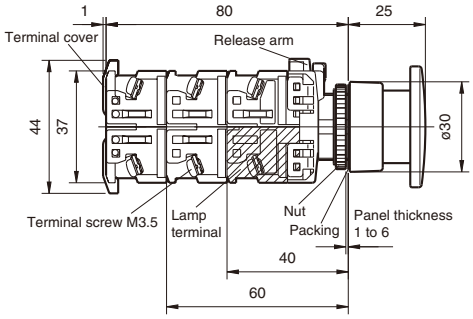

AR22M0L, M5L

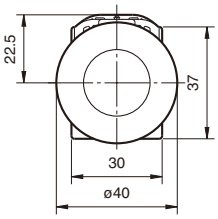

Mushroom (29mm dia.)

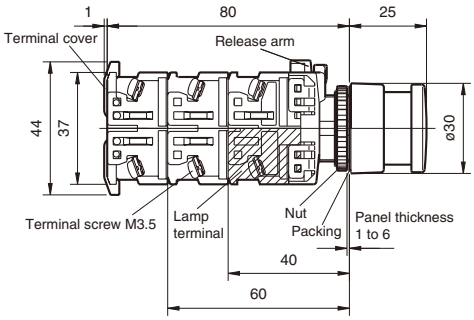

AR22M4L, M9L

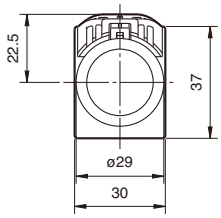

AR22M4P

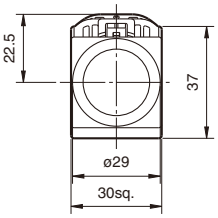

Extended with full guard

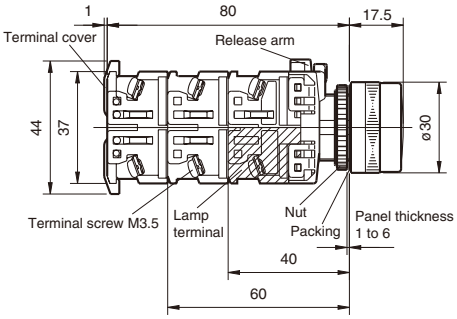

AR22G4L, G9L
AR22G1L, G6L

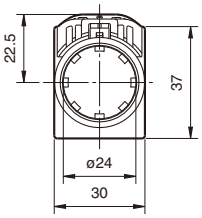

Extended with full guard (with openings)

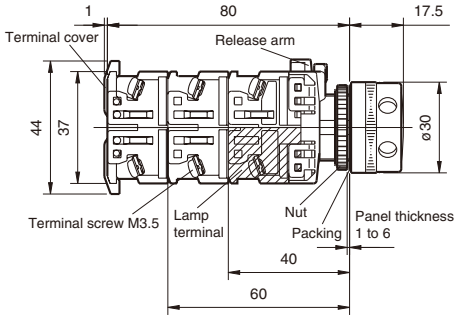

AR22G2L, G7L

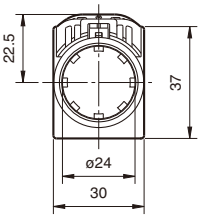

Push-lock, turn-reset

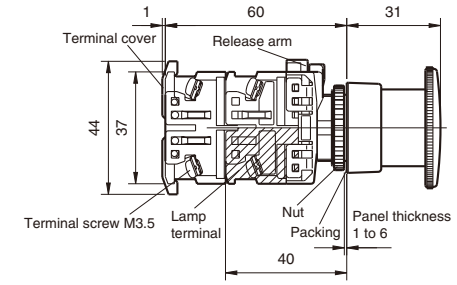

AR22V5L

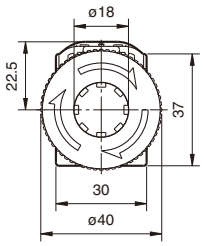

■ **Dimensions, mm**

• **Pushbutton switches**

Flush/Extended

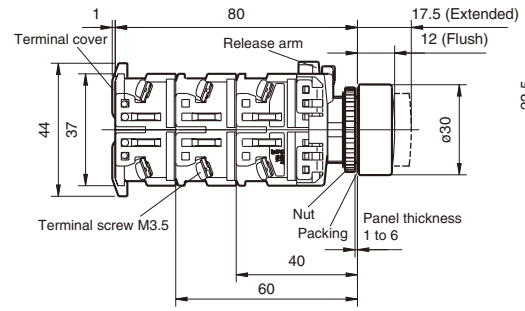

AR22F0R, F5R
AR22E0R, E5R
AR22FAR, FBR
AR22EAR, EBR

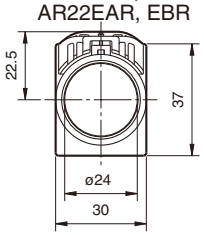

AR22F0S, F5S
AR22E0S, E5S

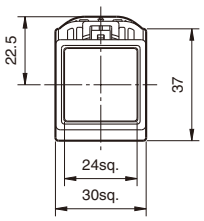

AR22F0Y, F5Y
AR22E0Y, E5Y

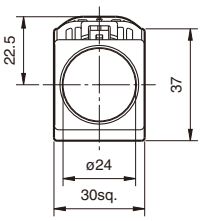

Mushroom (40mm dia.)

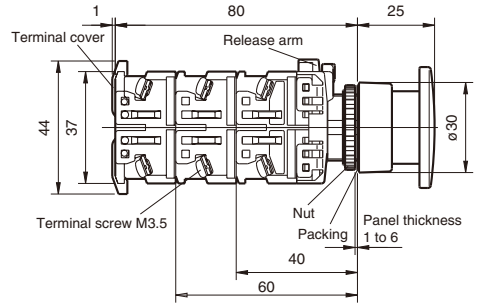

AR22M0R, M5R

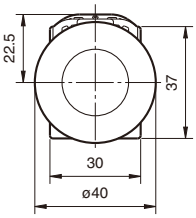

Flush/Extended with full guard

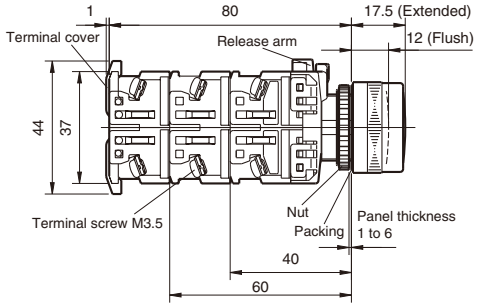

AR22G3R, G8R
AR22G2R, G7R

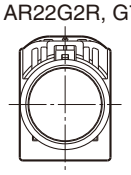

Mushroom (29mm dia.)

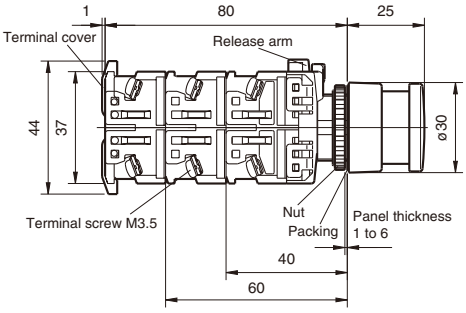

AR22M4R, M9R

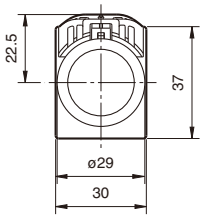

AR22M4Y

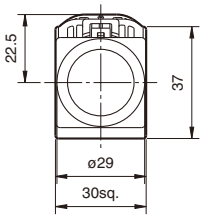

Extended with half guard

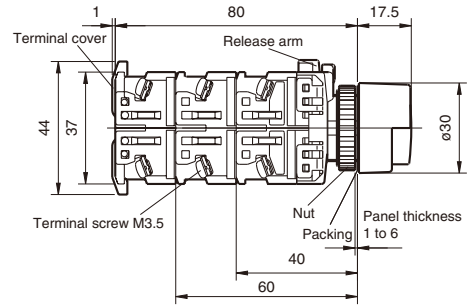

AR22G0R, G5R

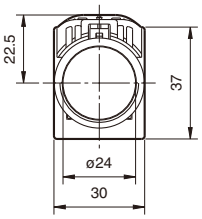

Mushroom with full guard (40mm dia.)

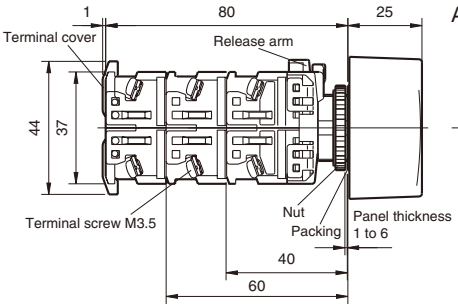

AR22M3R, M8R

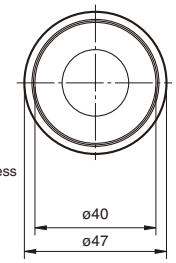

Pushbutton with selector ring

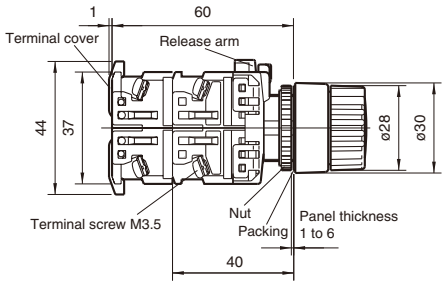

AR22S1R, S2R
AR22S3R, S6R

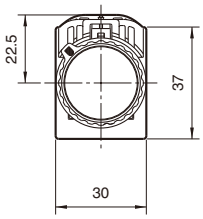

Push-lock, turn-reset

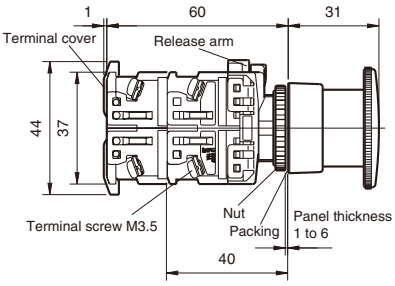

AR22V5R

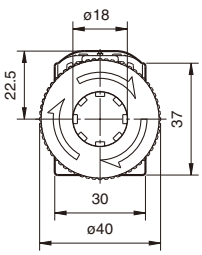

AR22 and DR22 Dimensions

■ Dimensions, mm

• Emergency stop pushbutton switches

Push-lock, turn-reset (40mm dia.)

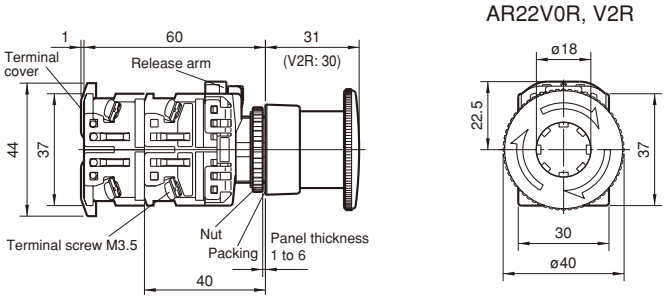

Push-lock, turn-reset (29mm dia.)

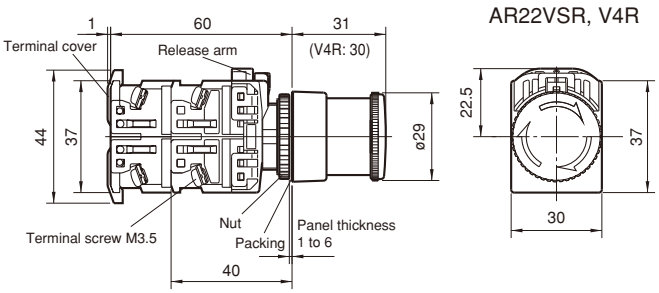

Key release push-lock, turn-reset (40mm dia.)

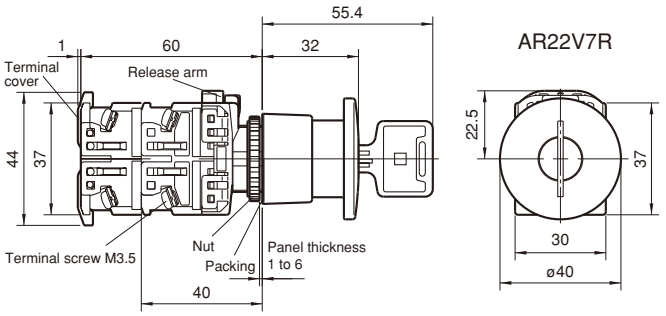

Push-lock, pull-reset (35mm dia.)

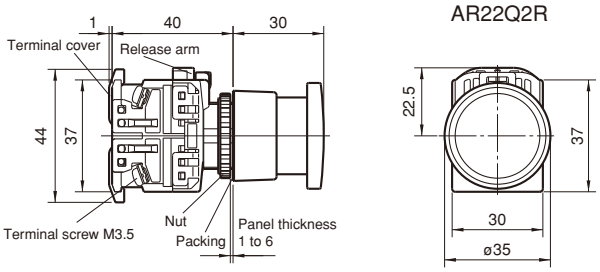

Unibody push-lock, turn-reset (40mm dia.)

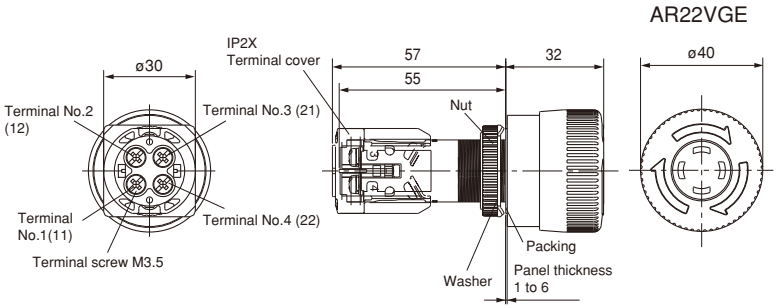

Wiring diagrams

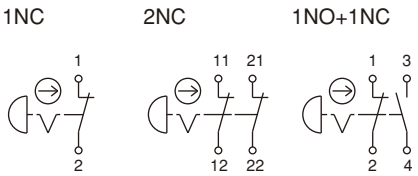

Note: Terminal No. shown in ( ) are for contact arrangement 2NC.

Push-lock, turn-reset or pull reset (40mm dia.)

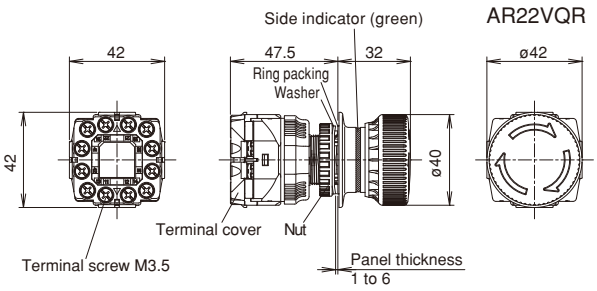

Push-lock, turn-reset (65mm dia.)

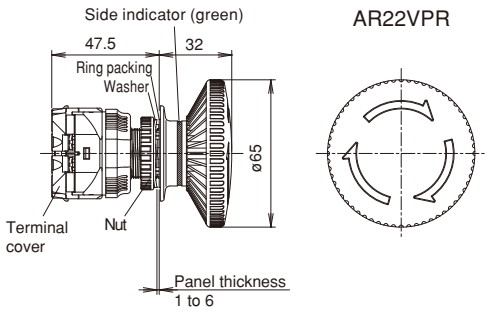

■ **Dimensions, mm**

• **Emergency stop illuminated pushbutton switches**

Push-lock, turn-reset (40mm dia.)

With transformer

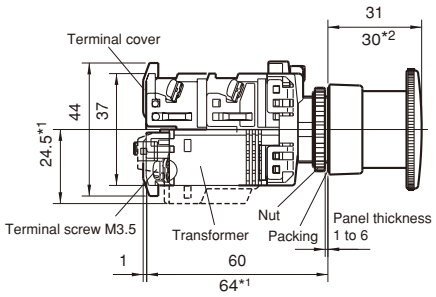

AR22V0L, V2L
AR22VDL, VAL

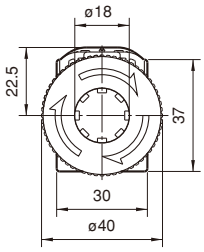

Without transformer

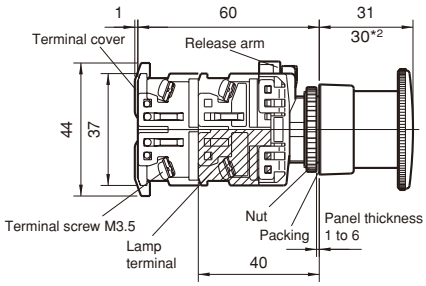

Note: *1 230V and over
*2 AR22V2L and VAL types only

Push-lock, turn-reset (29mm dia.)

Without transformer

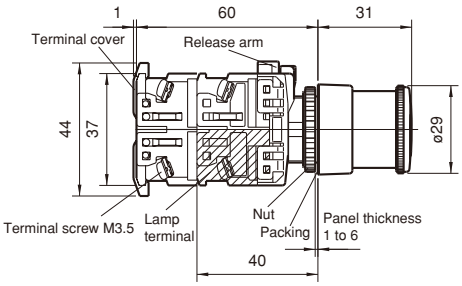

AR22VSL

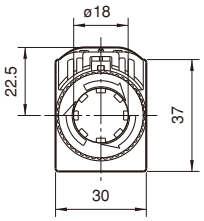

Unibody push-lock, turn-reset (40mm dia.)

Without transformer

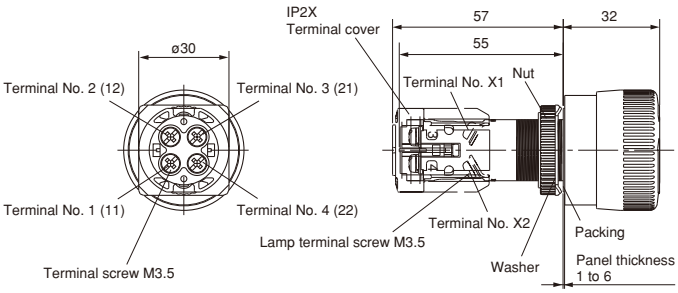

AR22VGF

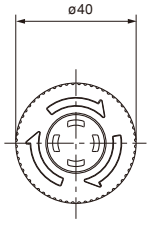

Wiring diagrams

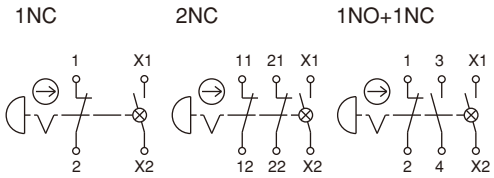

Note: Terminal No. shown in ( ) are for contact arrangement 2NC.

Push-lock, turn-reset or pull reset (40mm dia.)

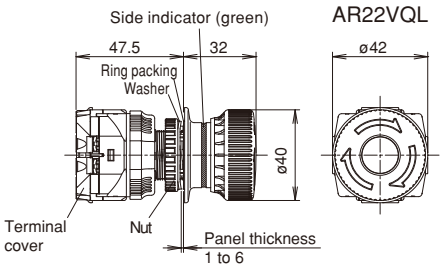

AR22VQL

AR22 and DR22 Dimensions

■ Dimensions, mm
• Selector switches

Knob

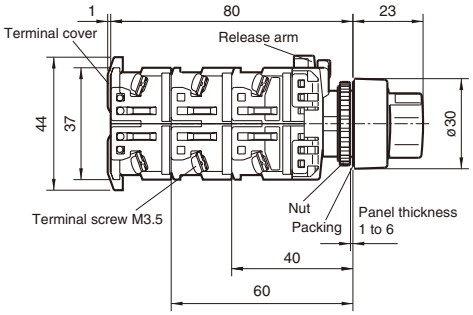

AR22PR, PCR

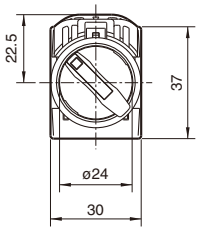

AR22PY, PCY

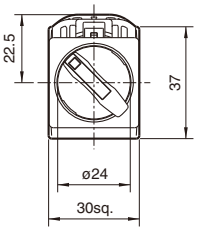

Lever

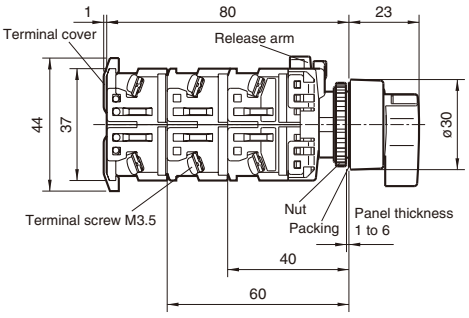

AR22WR, WCR

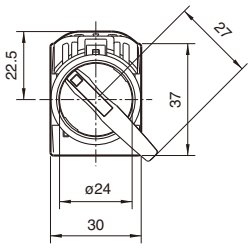

AR22WY, WCY

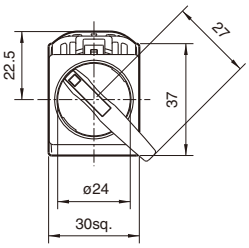

Cylindrical knob

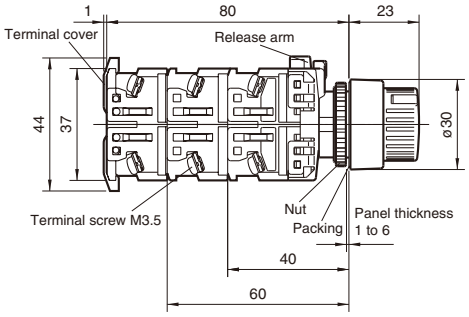

AR22RR, RCR

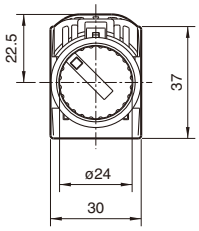

AR22RY, RCY

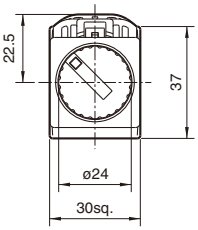

Key

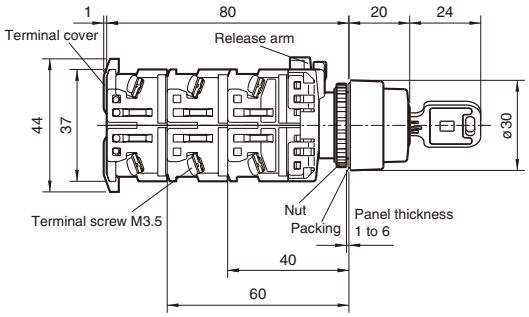

AR22JR, JCR
AR22JAR

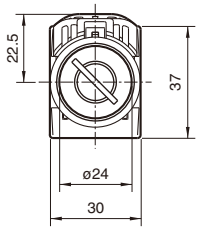

AR22JY, JCY

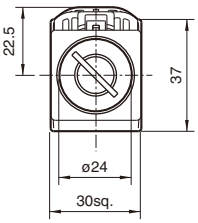

■ Dimensions, mm

• Illuminated selector switches

With transformer

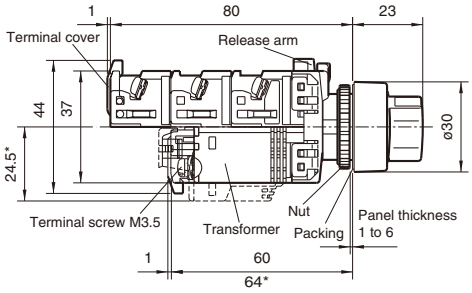

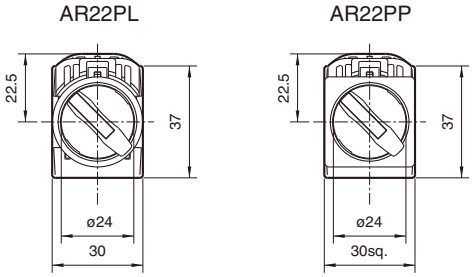

Note: * 230V and over

Without transformer

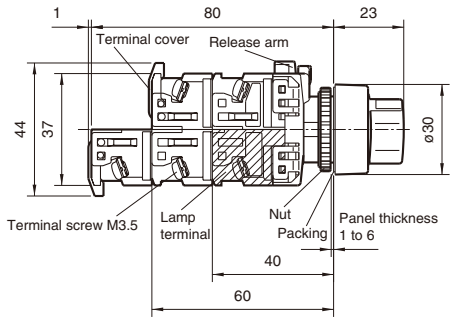

• Pilot lights

Dome

With transformer, with resistor unit

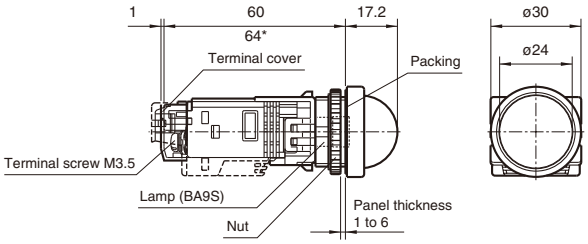

Without transformer

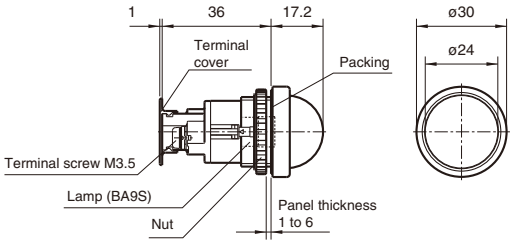

Short body/with transformer

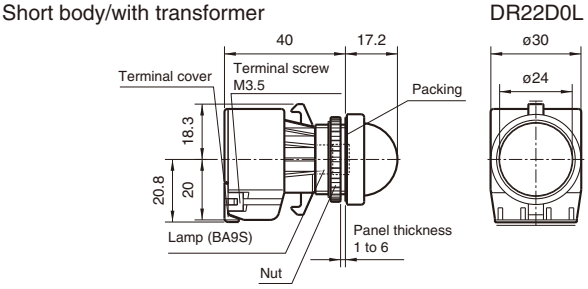

Short body/without transformer

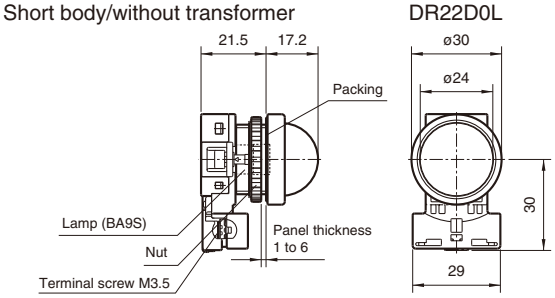

Note: * Except for the types 110V AC, 127V AC and 220V AC.

AR22 and DR22 Dimensions

■ Dimensions, mm
• Pilot lights

Extended

With transformer, with resistor unit

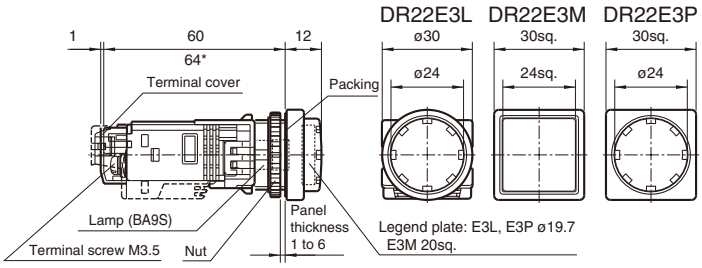

Without transformer

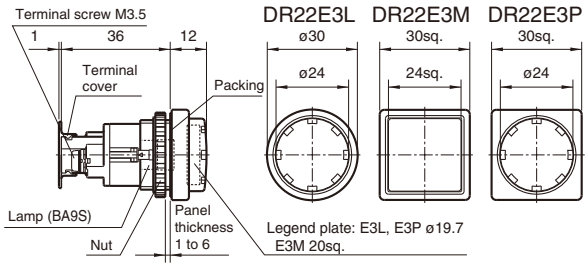

Short body/with transformer

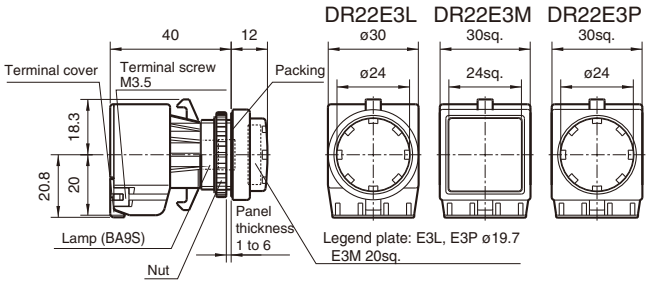

Short body/without transformer

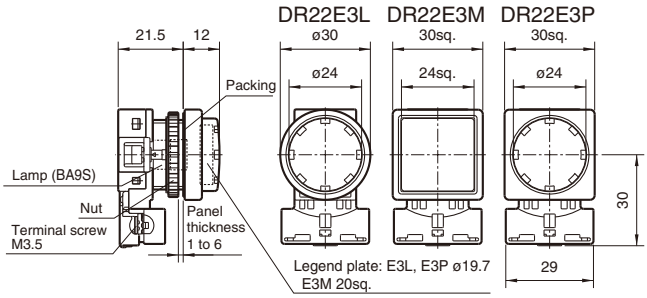

Note: * Except for the types 110V AC, 127V AC and 220V AC.

Faceted

With transformer, with resistor unit

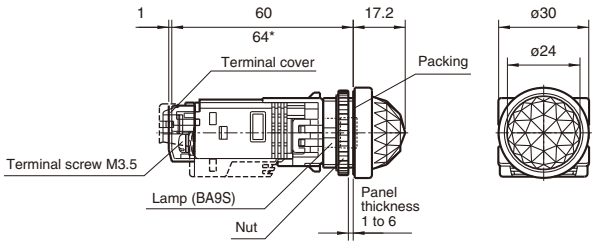

Without transformer

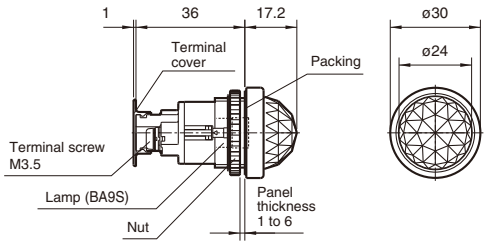

Short body/with transformer

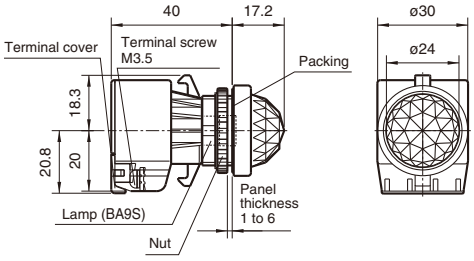

Short body/without transformer

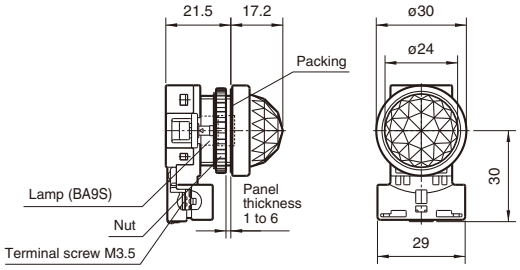

Note: * Except for the types 110V AC, 127V AC and 220V AC.

■ Dimensions, mm
• Pilot lights

Flush

With transformer, with resistor unit DR22F3M, F4M

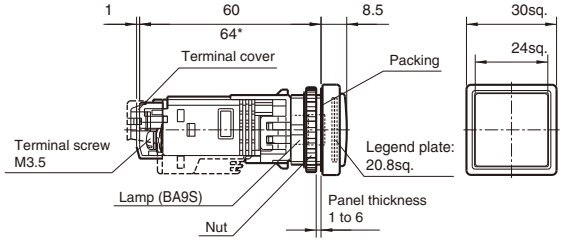

Without transformer DR22F3M, F4M

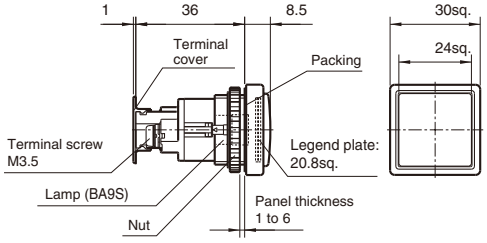

Short body/with transformer DR22F3M, F4M

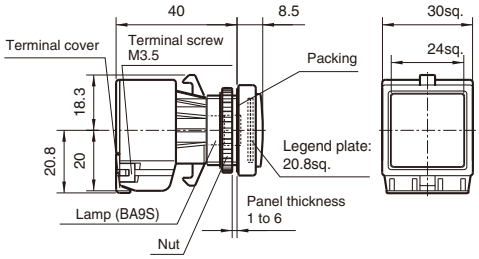

Short body/without transformer DR22F3M, F4M

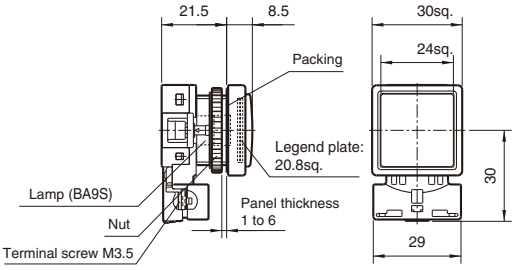

Note: * Except for the types 110V AC, 127V AC and 220V AC.

Flush (12mm high frame)

With transformer, with resistor unit DR22F5M

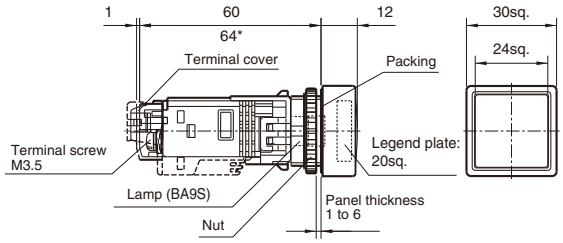

Without transformer DR22F5M

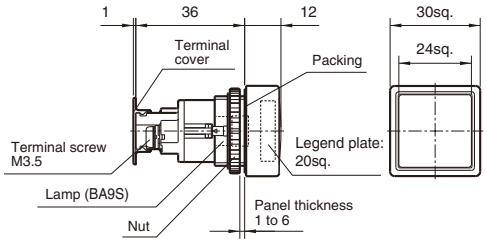

Short body/with transformer DR22F5M

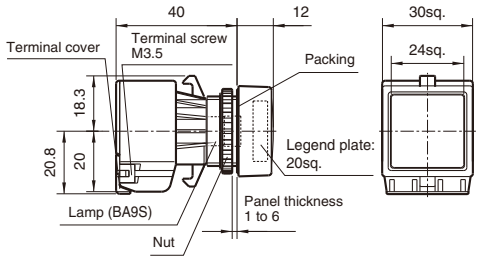

Short body/without transformer DR22F5M

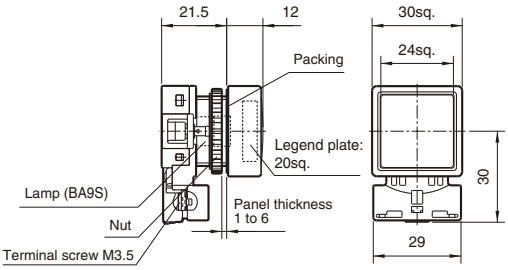

Note: * Except for the types 110V AC, 127V AC and 220V AC.

AR22 and DR22 Dimensions

■ Dimensions, mm

• Pilot lights

Flush rectangular

With transformer, with resistor unit

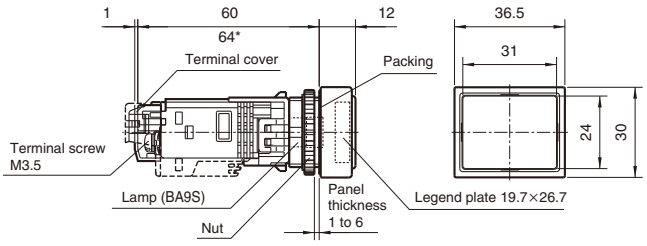

Without transformer

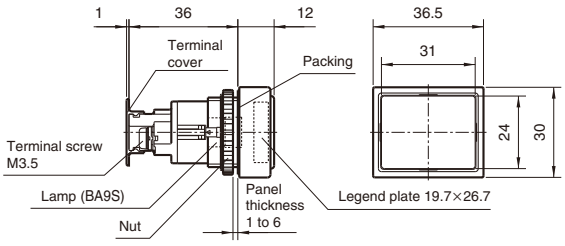

Short body/with transformer

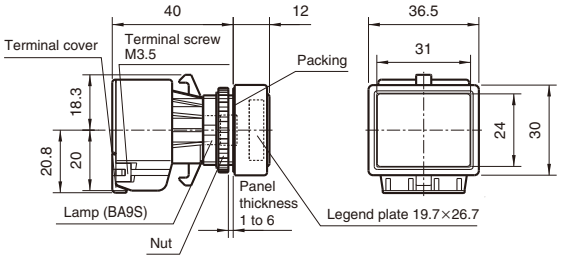

Short body/without transformer

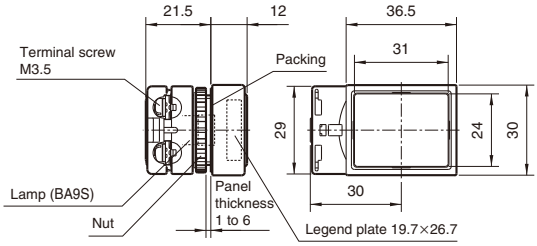

Note: * Except for the types 110V AC, 127V AC and 220V AC.

• Joy stick selector switches

Ball type without lock

Screw terminal AR22A0N, A5N

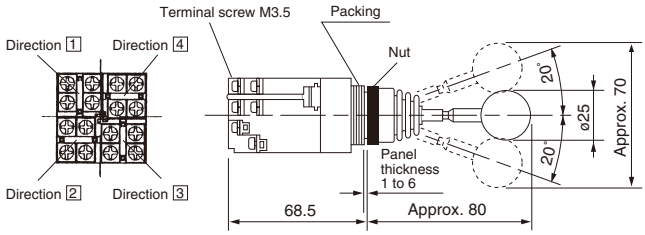

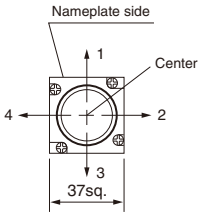

Solder/tab terminal AR22A0H, A5H

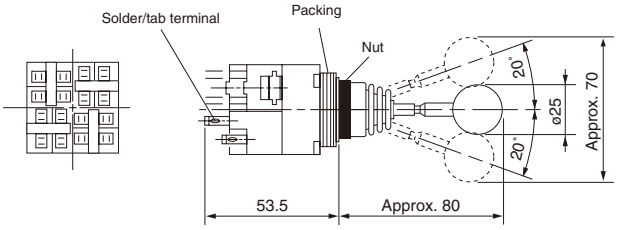

Notes * The contact arrangement is operable in the designated direction by pulling the lock piece in the central position with the fingers. The lock piece will return automatically and locks when the lock piece is released in the central position.
The lock piece locks in the central position only.

Ball type with lock

Screw terminal AR22A1N, A6N

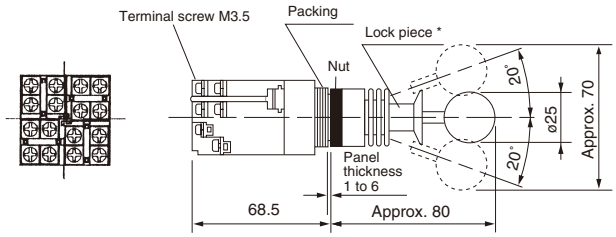

Solder/tab terminal AR22A1H, A6H

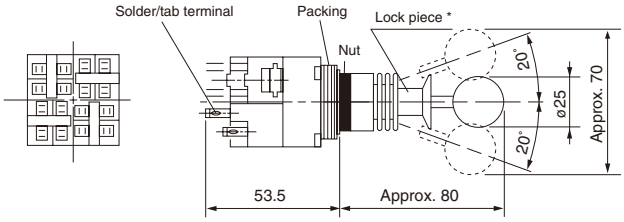

■ **Dimensions, mm**

• **Joy stick selector switches**

Rubber cap type without lock

Screw terminal AR22A2N, A7N

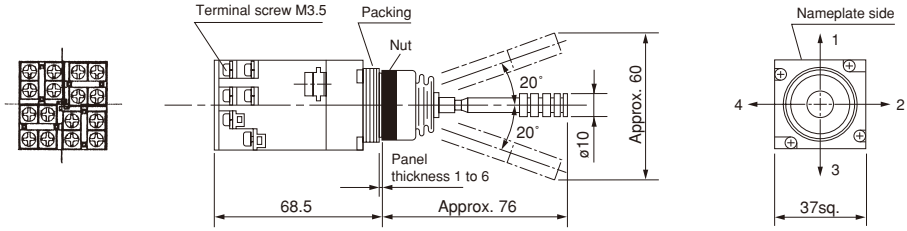

Solder/tab terminal AR22A2H, A7H

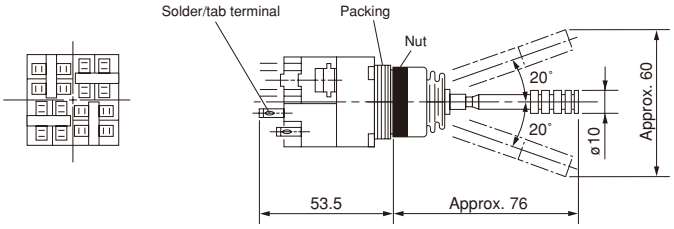

• **Buzzers**

Electronic sound

With transformer DR22B5 Without transformer DR22B5

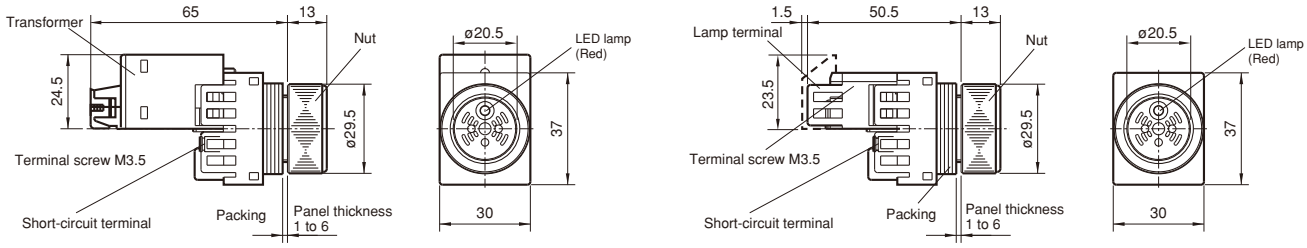

Electronic sound (IP54)

With transformer DR22B8 Without transformer DR22B8

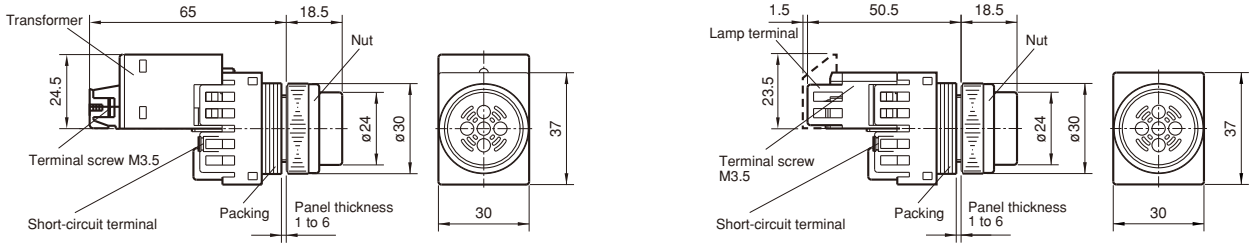

AR22 and DR22
Notes on use

Notes on use

■ Fit two sizes of panel cutout holes

* The unique nut with a step allows switch to be mounted in either 22.3mm- or 25.5mm-dia. holes as shown in Fig. 1 without any extra adapter.

Fig. 1 Panel cutout

The switch mounted as a ϕ22mm diameter unit.

The switch mounted as a ϕ25mm diameter unit.

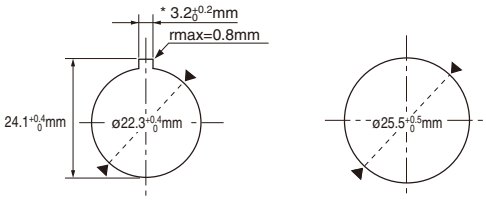

Note: * If key-washer or legend plate are not used, 3.2mm-wide location holes need not be cutout.

C1

■ Detaching contact block from the operator

While keeping the white release arm pressed with one finger, pull-out the contact block in the direction by the arrow.

Fig. 2 Detaching contact block from the operator

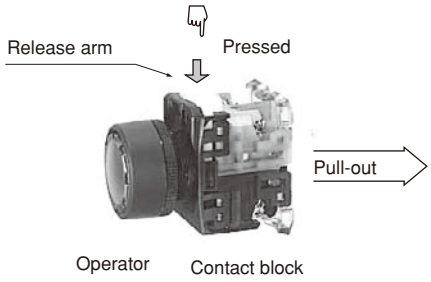

■ Mounting operator to panel

① In a 22.3mm-dia. panel cutout hole
Insert the operator into the cutout hole from the panel front as shown in the Fig. 3.
Then, fit section "A" of the AR9A004 wrench from behind the panel and secure the operator with nut. *(See page C1-112 for the wrench)*

Fig. 3 Mounting an operator in a 22.3mm-dia. hole

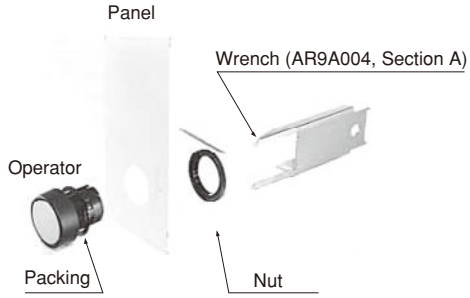

Note: Recommended tightening torque is from 1 to 1.5N•m

② In a 25.5mm-dia. panel cutout hole
As shown in Fig. 4, with the nut step-out side oriented to the panel, use the wrench to tighten the nut and secure the operator.

Fig. 4 Mounting a operator in a 25.5mm-dia. hole

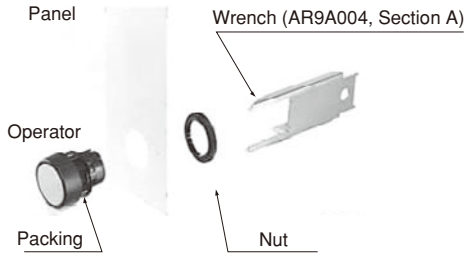

Note: 1. Recommended tightening torque is from 1 to 1.5N•m
2. Ensure that the step-out portion of the nut is correctly fitted in the cutout hole.

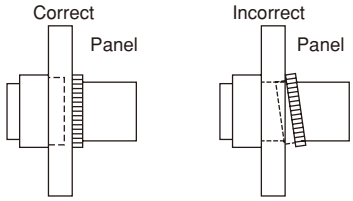

For easier mounting in the 25.5mm-dia. hole, the AR9Y718 adapter is also available separately.

Fig. 5 Mounting with an adapter and locking nut

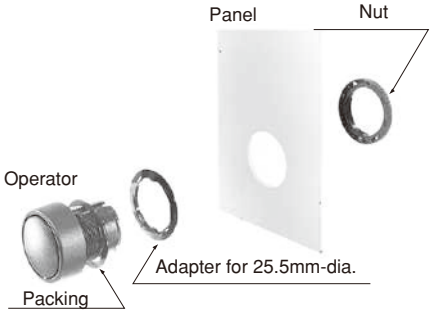

■ Mounting contact block to the operator

As shown in Fig. 6, align the protruding part of the contact block release arm with the operator groove at the ▽ mark. Then, insert the contact block into the operator until it clicks.

Fig. 6 Mounting the contact block to the operator

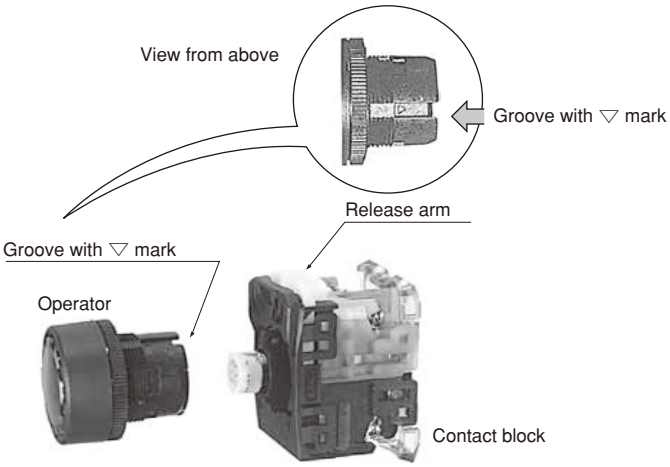

■ VG type panel mounting

As shown in the illustration, remove the live section cover, nut, and washer, and insert the main unit into a panel which has been cut from the front side of the panel. Place the type number AR22 facing upward, and secure the main unit with the nut using a wrench AHX701. The appropriate tightening torque is 1 to 1.5N•m.

Fig. 7

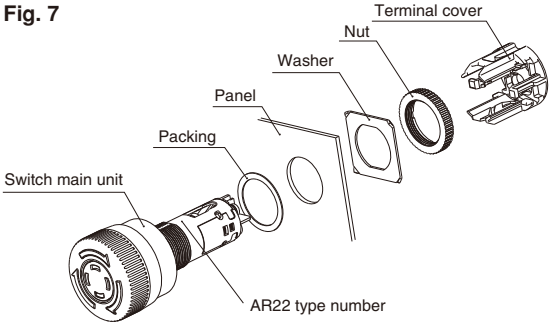

■ Joy stick selector switch mounting on panel

(1) Twist and remove the ball from the operator.
(2) Loosen the nut and remove the switch if the switch is provided with a lock.
(3) If no locking nut is provided, loosen the nut and remove the switch after the packing part (A) shown in the illustration is stretched to the lever groove.
(4) Mount the switch in the order opposite to removal. Set the packing to the notch on the lever as a reference. Do not separate the nut from the packing.
(5) Use a torque wrench AR9A006 to tighten the nut from the front of the panel.
Note: Recommended tightening a torque is 1 to 1.5N•m.

Fig. 8

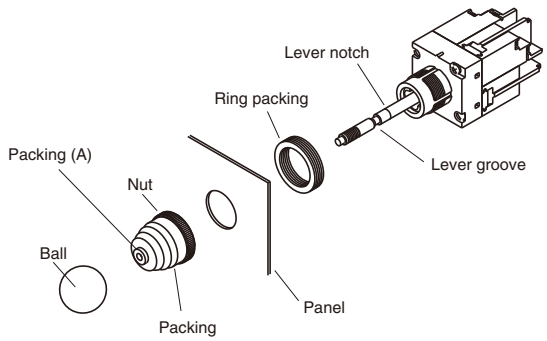

■ VQ type panel mounting

● Removing the operator from the contact unit

① Pull down the release cover of the contact unit, ② turn it counter clock wise in 15 degrees, ③ at the position pull the contact unit, after that, the contact unit can be removed from the operator.

Fig. 9

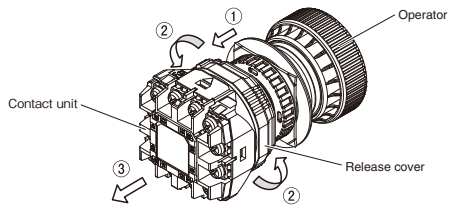

• Caution at the removing process of the contact unit from the operator
(1) When the contact unit is removed from the operator, at the process, “NO” contact of the unit is turned into “ON” position.
(2) At the process when the contact unit is removed from the operator, don’t give excessive force to the unit. It may cause the switch to break or to go into maloperation.

● Mounting the operator on the panel

Remove the tightening nut and washer from the packaged state of the operator, checking the packing whether it is placed properly on to the fitting surface of the front side of the panel, insert the operator keeping whose ▼ mark at the top position into the installation hole of the panel.
The operator penetrates the panel through the installation hole to the rear side of the panel. It is fixed at the rear side of the panel with the tightening nut turned by the tightening wrench.

Note 1 : The proper tightening torque is 1.0 to 1.5N·m for AR22, and 1.5 to 2.5N·m for AR30.
Note 2 : The tightening nut has two faces, convex and concave. Face the concave side of it to the panel when it tightens up the operator at the rear side of the panel. If it is used in the opposite face, the operator will not be fixed properly there.
Note 3 : Check the tightening nut regularly whether it tightens the operator properly. If it seems that tightening is not sufficient, do not forget to tighten the screw increasingly.
Note 4 : Do not use pliers or other improper tools to tighten the nut, and do not tighten it excessively, or the nut may be damaged or the switch may malfunction.

Fig. 10

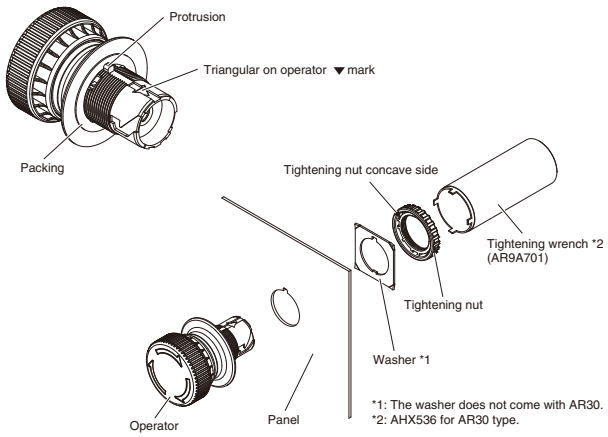

● Mounting the contact unit

Meet the mark ▲ on the contact unit to the same mark ▼ on the operator, insert the contact unit completely into the operator until it makes a click sound. (The click sound tells that the contact unit is completely connected to the operator.) Please consider it when you do it.
After the contact unit is set, could you check the sequence and confirm the unit whether it operates well?

AR22 and DR22
Notes on use

● Caution when the contact unit is set in

(1) The “position” of the release cover of the contact unit which is being connected to the operator is different from the “position” of it of the contact unit which is removed from the operator. However, it is normal.

(2) When the contact unit is connected to the operator, it should be connected in the specified correct way. When two units are connected, meet the apex of the triangle mark on the contact unit to the apex of the triangle mark on the operator. Connecting the units without meeting each apex of their triangle marks may cause the switch to break. If there is a switch recognized broken is remained there, it should not be used for any purpose.

Fig. 11

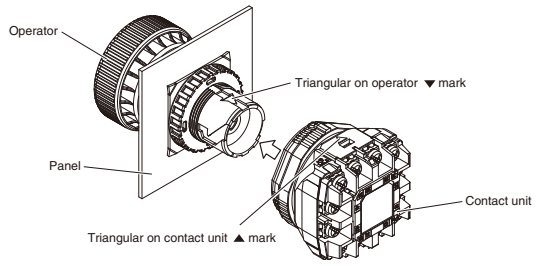

■ Buzzer mounting on panel

(1) Remove the nut, and insert the main unit into the mounting hole from the back of the panel.

(2) Tighten the buzzer using a wrench AR9A006 from the front side of the panel.

Note:
- Recommended tightening torque is 1 to 1.5N•m.
- Electronic sound (IP54) type has a all-in-one unit with nut and cap.

■ Applicable panel thickness

The AR22/DR22 series switches are mountable to panels with thickness as given in Table below.

Mounting condition			Applicable panel thickness (mm)
Without accessories			1 to 6
With accesories	Protective cover, water-proof cap, legend plate		1 to 4
	Key washer	without hole	1 to 4
		with hole	1 to 5
	Adapter for a 25.5mm-dia. hole		1 to 5.5

• When using a joy stick selector switch and buzzer

The applicable panel thickness is 1 to 6mm. Five 1.3mm packings (single-piece type) are included as standard equipment. Insert as many as required depending on the panel thickness, using the following table as a guide. When using a key washer, legend plate, or adapter, their thickness will have to be added to the values in the guide.

Panel thickness (mm) (plus key washer, legend plate)	Number of packings (reference)
1.0 to 1.6	5
1.6 to 2.8	4
2.8 to 3.8	3
3.8 to 4.8	2
4.8 to 6.0	1

■ Minimum mounting space, mm

(1) Minimum mounting space

Fig. 12

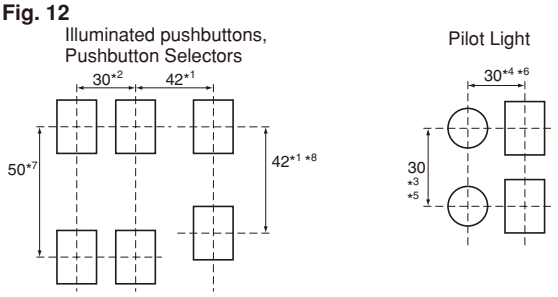

Notes:
- *1 AR22M0□, M5□, V5□, V0□, V2□, V7R, VG□: 42mm
  AR22M3R, M8R: 49mm
  AR22Q2R, WR, W0R, WY, WCY: 40mm
- *2 When mounting contact blocks at 30mm pitch, use it circuit of 380V or less.
- *3 Short body with transformer types: 50mm.
- *4 Rectangular types: 36.5mm (except for short body without transformer types).
- *5 Short body without transformer types: 60mm.
- *6 Rectangular short body without transformer types: 60mm.
- *7 This dimension applies when transformer units or contact blocks face each other.
- *8 This dimension applies when transformer unit or contact block is mounted on only one side.

When mounting operators on a panel, orient all ▽ marks on the operator upwards.
(The operator release arms are oriented upwards.) This aligns the terminals of all contact blocks, thus making wiring easy.

(2) Detaching contact blocks from operators
As shown in Fig. 10, insert a flat-head screw driver into the groove of the white release arm on the contact block. Then, while inserting the driver in hole A of the operator base, lower the driver grip and take out the contact block.

Fig. 13

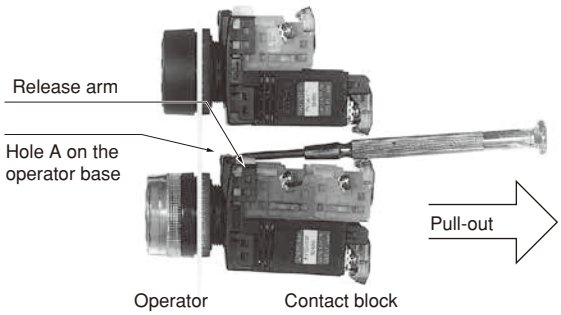

Note: Use a flat head screwdriver as shown at the right.

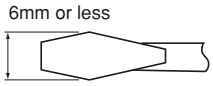

■ Products with blue and green LEDs

The LED devices on products with high-brightness (blue and green) LEDs are very sensitive to static electricity. When replacing LED lamps do not allow static electricity to come into direct contact with the metal frame on the upper side of the LED lamp. The LED device may be damaged if this part is subjected to static electricity. When installing or removing an LED lamp, it is recommended that you use the lamp changer (AHX790).

Fig. 14

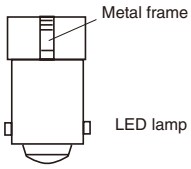

■ Wiring

(1) The terminal screws are M3.5 pan head screws. Solid wires, stranded wires, or crimp terminals can be connected.

Fig. 15

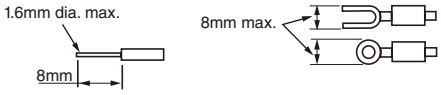

(2) Two crimp terminals can be used by putting one of them on top of the other. If fork-type crimp terminals are used in the horizontal direction, however, use ones as shown in the figure below. (i.e., Toei Tanshi's F2-3.5S or an equivalent).

Fig. 16

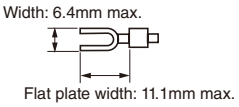

(3) The terminal washers are a self-lifting type.
(4) Tighten the terminal screws to a tightening torque of 0.8 to 1N•m.
(5) Keep the terminals free of external force while wiring or after wiring, or operational failures may result.
(6) Do not use screws other than the provided terminal screws.

Notes:
- If solid wires are connected to the lamp terminals in the horizontal direction (on the side), be sure to insert the solid wires into the square washers.
- Terminal layout., *see page C1-54*
- See page C1-53 for the wiring of the joy stick selector switch and VG type.

■ LED Indicator

(1) LED Lamp Malfunctioning
The LED lamp is lit by a very small level of current.
Therefore, it may be erroneously lit by a leaking current from the surge absorption circuit or semiconductor circuit or due to stray capacitance between cables. In that case, provide a countermeasure (e.g., connect a resistor in parallel with the LED lamp).
• Countermeasure for Malfunctioning
The LED lamp malfunctions can be prevented by connecting a shunt resistor (R) or CR elements (a capacitor and resistor) in parallel with the LED lamp terminal. The resistance and CR values vary depending on the model and the operating conditions.

Fig. 17

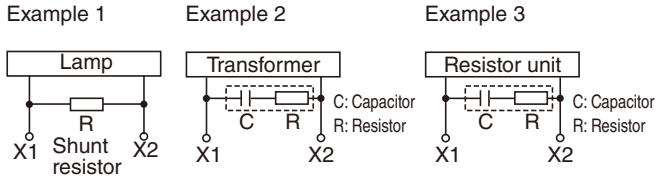

Example 1:
- 24V DC
  R: 10kΩ (0.5W)
- 24V AC
  R: 2kΩ (2W)

Example 2:
- 100V AC
  C: 0.33μF (250V AC)
  R: 120Ω (0.25W)
- 220V AC
  C: 0.1μF (250V AC)
  R: 120Ω (0.25W)

Example 3:
- 110V DC
  C: 4700pF (250V DC)
  R: 100Ω (0.5W)

(2) Incoming surge
High luminance LED products use an element sensitive to static electricity. They may not be lit by an abnormal voltage like surge. Please note it.

AR22 and DR22
Notes on use

■ Joy stick selector switch

• Screw terminal wiring

(1) The terminals use M3.5 pan head screws. Use crimp terminals to wire the terminals.

Fig. 18

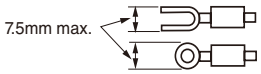

(2) The terminal washers are a self-lifting type.

(3) Tighten the terminal screws to a tightening torque of 0.8 to 1.0N•m. Keep the terminals free of external force during and after wiring, or operational failures may result.

• Solder (tab terminal) wiring

(1) Pay attention to the following items when soldering the terminals.
Use a soldering iron with a power consumption of 30W.
Use resin-core solder.
If a 30W soldering iron is used, finish soldering the terminals within five seconds. If a 20W soldering iron is used, finish soldering the terminals within 10 seconds. Make sure that the soldering iron tip length is at least 20mm long. Do not apply external force to the terminals. Because lead-free solder's melting point is slightly high, soldering work may be difficult. Use a soldering iron whose tip is rather large or whose calorie is rather high.

(2) When using adjacent terminals, use insulation tubes to prevent the terminals from short-circuiting. Utmost attention must be paid to the solder terminals if especially thick wires are used or if a large quantity of solder is used.

(3) Connectable wires
Solid wire: 2 wires, 0.8mm dia. max.
Stranded wire: 1 wire, 0.75mm^2 max.

(4) Use the 110 (2.8mm) series receptacle for the tab terminals.

(5) Wire the tab terminals with the contact unit connected to the main unit.

• Operation

Operation shall be made after the joy stick operation lever is surely returned to the center position. Do not apply excessive force to the operation lever. The maximum permissible force is 100N.

• Use of contact blocks

If NO and NC contacts are used in the same contact block, check that there is no difference in potential. Do not connect different type of power source different in type.

■ Buzzer

• Noise

If the application circuit is likely to generate excessively strong noise, connect a surge absorber in parallel with the buzzer.

• Place of Use

The buzzer does not have a drip-proof construction. Do not use the buzzer in places where oil or water is sprayed or where dust accumulates. If the buzzer is a splash-proof type, it will resist sprays of water.

• Do not use the buzzer in places that are subject to an excessive amount of corrosive gas.

• Note that the buzzer is likely to sound erroneously due to leakage current or the like.

■ AR22VG type

• As shown in Fig. 16 (a), engage the tip of the wrench (AHX8003) with the groove in the center to mount or remove the locking unit. The recommended tightening torque is 0.6 to 1N•m.

• As shown in Fig. 16 (b), insert the lamp changer (AHX790) and press the lamp changer to mount or remove the lamp. Turn the lamp changer clockwise when mounting the lamp and counterclockwise when removing it.

Fig. 19

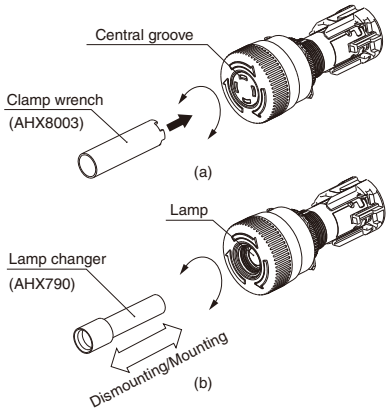

Note: The lamp and neon lamp are special models for the AR22VGF. Use only these special lamps for replacement.

• Wiring

The terminals use M3.5 pan head screws. Use crimp terminals for wiring and cover the crimp terminals with insulation tubes.

Fig. 20

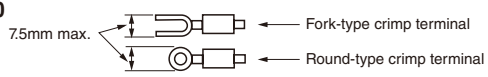

• The terminal washers are a self-lifting type.

• Tighten the terminal screws to a torque of 0.8 to 1N•m. Keep the terminals free of external force during and after wiring, or operational failures may result.

• Wiring precautions

(1) Use of round-type crimp terminal

• Remove the live section cover, and half-tighten to the point parallel with the terminal rib white marks in the direction of the arrows as shown in the illustration below.

• Mount the live section cover and tighten the terminals securely.

Fig. 21

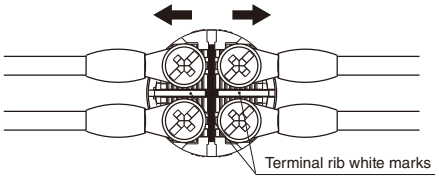

As shown in the illustration below, mount the live section cover so that the mounting legs of the cover engage with the concave parts of the main unit.

Fig. 22

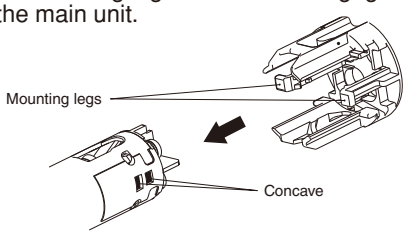

(2) If fork-type crimp terminals are used, wiring will be possible without removing the live section cover.

■ Operation

- Do not use a hitting or bouncing action to operate the button, or the switch may break. Always operate the switch by hand. Do not pull mushroom head pushbuttons or alternate buttons other than the Q2.
- Do not rotate the selector ring type while the button is pressed, or the mechanism may break.
- The control type incorporates make-before-break contacts. Prepare a protection circuit for the application.
- The dial of the selector switch rotates with a light force. Do not apply force in excess of 1N•m. Please do not pull out or insert the key forcibly.
- To release the lock of the push-lock type, rotate the button clockwise as shown by the arrow. Do not pull the button, or the latch may break and the lock may fail to work.
- Do not lock the emergency stop pushbutton switch and emergency stop illuminated pushbutton switch in use. Push and lock the switch in case of an emergency only.

■ Terminal layout

Fig. 23

NO contact (AR9B290)
Blue

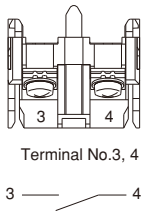

Terminal No.3, 4

NC contact (AR9B291)
Red

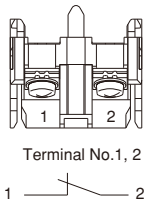

Terminal No.1, 2

Lamp terminal (AR9B292)
Black

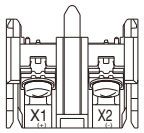

Terminal No.X1 (+), X2 (−)*

Lamp terminal (For buzzer)
(AHX291L) Brown

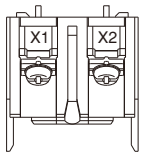

Terminal No.X1 (+), X2 (−)*

Pilot light
(without transformer)

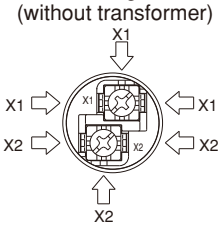

Terminal No.X1 (+), X2 (−)*

Transformer (AR9T511)
(220V or less)

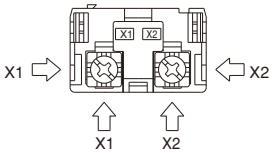

Terminal No.X1, X2

Transformer (AR9T511)
(230V or more)
Transformer (AHX511)
(For buzzer)

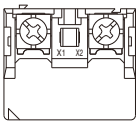

Terminal No.X1, X2

Resistor unit (AR9T519-H)
Flicker unit (AR9T002)

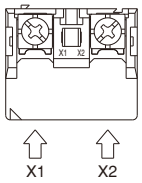

Terminal No.X1 (−), X2 (+)*

Pilot light
(short-body without transformer)

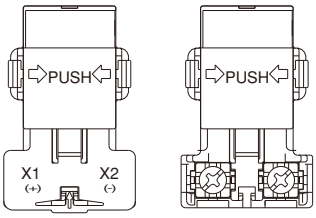

Terminal No.X1 (+), X2 (−)*

Pilot light
(short-body with transformer)

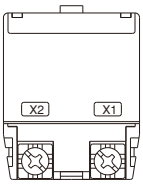

Terminal No.X1, X2

Note: * The positive and negative terminals are used for DC applications where the order of polarity is required.

Joy stick selector switch
(screw)
1NO or 1NC

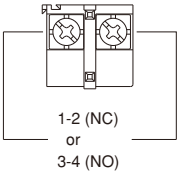

Terminal No. 1-2 or 3-4

Joy stick selector switch
(screw)
1NO + 1NC

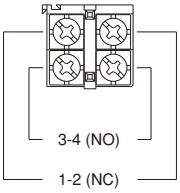

Terminal No. 1-2, 3-4

Joy stick selector switch
(solder/tab)
1NO + 1NC

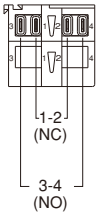

Terminal No. 1-2, 3-4

Joy stick selector switch
(solder/tab)
2NO + 2NC

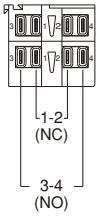

Terminal No. 1-2, 3-4

AR22 and DR22
Notes on use

■ Terminal arrangement (AR22VQ)

Emergency stop pushbutton switches	Emergency stop illuminated pushbutton switches	Emergency stop illuminated pushbutton switches (interlocked with a lamp circuit)
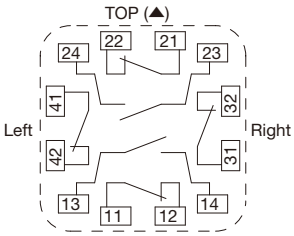	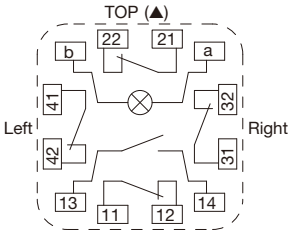	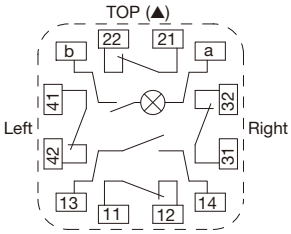

● Positions of contact terminals "NC"

Contact arrangement			
1NC	2NC	3NC	4NC
11-12	11-12	11-12	11-12
	21-22	21-22	21-22
		31-32	31-32
			41-42

AR30 and DR30
General information

The full range of the contact blocks and transformer units suitable for the AR22 and DR22 series may also be fitted to the AR30 and DR30 series.

■ Features

Quick-replacement contact blocks and transformer units
The snap-on construction makes replacement and addition of contact blocks and transformer units very simple and straightforward.

Oil-and dust-proof operator module construction
The protection level of the AR30/DR30 operator modules conforms to IEC Standard IP65. The special seals protect the operator modules and switch mechanisms against oil, dust, and grime, thus ensuring high performance in dusty and moist environments.

Miniaturization
- Selector switches with 1NO+1NC: 41mm deep
  Pilot lights: 34mm deep
- The transformer now occupies far less space.

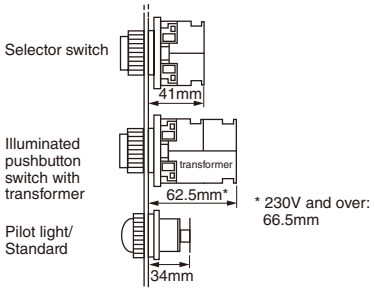

Self-cleaning contacts
All the contacts are double break type and feature self-cleaning action.
Every time the switch is operated, the contact surfaces are wiped with a sliding movement, thus ensuring high contact reliability even at low voltage and small current levels (5V, 5mA).

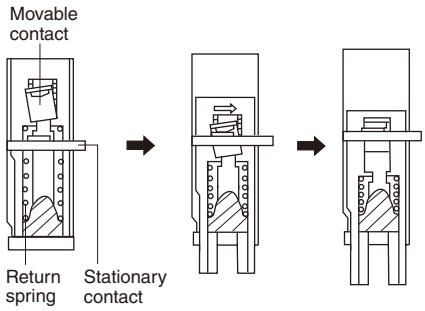

Metal nut
Safer model with metal nut is also available

Wiring
- Wiring from two directions is possible.
- Wiring in both vertical and lateral directions facilitates wiring in narrow spaces.
- Color coding of contact blocks makes wiring easy.
  1NO: Blue, 1NC: Red
  Lamp terminal and transformer unit: Black

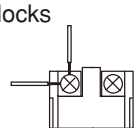

Safety
- A terminal cover is provided, assuring safety and security.
- FUJI's original Trigger Action mechanism is used in the emergency stop pushbuttons. They are suitable for emergency stop and safety. This mechanism prevents the contacts from moving until the button is pushed and locked.

Protection
- Excellent oil-tight construction (IP65) of the operator.
- Closure of the contact block has been improved.

■ Approvals

For further information related to approved type, *see page C1-58 to C1-61.*

AR30 and DR30
Quick reference guide

■ Illuminated pushbutton switches

Operator	Type	Operator	Type	Operator	Type
Extended round head *See page C1-73, C1-96*	**AR30E0L, E5L** KKD05-163	Extended with full guard (24mm dia. with openings) *See page C1-73, C1-96*	**AR30G2L, G7L** KKD19-121	Push-lock, turn-reset (40mm dia. with white arrow) *See page C1-76, C1-97*	**AR30V5L** KKD06-348
Extended with transparent full guard (24mm dia.) *See page C1-73, C1-96*	**AR30G4L, G9L** KKD05-164	Extended with full guard (24mm dia.) *See page C1-73, C1-96*	**AR30G3L, G8L** KKD19-111	Push-pull *See page C1-73, C1-97*	**AR30Q7L** KKD18-414

C1

■ Pushbutton swtiches

Operator	Type	Operator	Type	Operator	Type
Flush round head *See page C1-75, C1-98*	**AR30F0R, F5R** KKD05-167	Mushroom head (29mm dia.) *See page C1-75, C1-98*	**AR30M4R** AF95-8	Mushroom head with full guard (35mm dia. metal nut) *See page C1-75, C1-98*	**AR30GSR** KKD19-133
Extended round head *See page C1-75, C1-98*	**AR30E0R, E5R** KKD05-165	Extended with full guard (24mm dia.) *See page C1-75, C1-98*	**AR30G1R, G6R** KKD19-125	Giant head *See page C1-75, C1-99*	**AR30B0R** KKD19-141
Flush round head Symbol mark type *See page C1-75, C1-98*	**AR30FAR, FBR** AF98-195	Extended with half guard *See page C1-75, C1-98*	**AR30G0R, G5R** KKD19-105	Giant head with guard *See page C1-75, C1-99*	**AR30B1R** KKD19-139
Extended round head Symbol mark type *See page C1-75, C1-98*	**AR30EAR, EBR** AF98-194	Pin lock *See page C1-75, C1-98*	**AR30GPR** AF96-240	Giant head with full guard *See page C1-75, C1-99*	**AR30B2R** KKD19-137
Mushroom head (40mm dia.) *See page C1-75, C1-98*	**AR30M0R, M5R** KKD05-162	Mushroom head with full guard (40mm dia.) *See page C1-75, C1-98*	**AR30M3R, M8R** AF95-17	Giant head with full guard *See page C1-76, C1-99*	**AR30B3R** KKD19-135

Note: AR30M8R: Not approved standard : *See page C1-295*

■ Pushbutton switches

Operator	Type	Operator	Type	Operator	Type
Pushbutton with selector ring (2-position) *See page C1-77, C1-99*	**AR30S1R, S2R, S3R, S6R** KKD05-166	Push-lock, turn-reset (40mm dia. with white arrow) *See page C1-76, C1-99*	**AR30V5R** KKD08-051	Pushbutton with emergency operating cap *See page C1-76, C1-99*	**AR30FVR** KKD19-119
Push, turn-lock *See page C1-76, C1-99*	**AR30N0R** KKD19-129				

■ Emergency stop pushbutton switches (conform to EN418)

Operator	Type	Operator	Type	Operator	Type
Push-lock, turn-reset (Soft-touch 40mm dia.) *See page C1-78, C1-100*	**AR30V0R** KKD06-353	Push-lock, turn-reset (65mm dia.) *See page C1-78, C1-100*	**AR30V1R** KKD16-071	Push-lock, pull-reset (35mm dia.) *See page C1-78, C1-100*	**AR30Q2R** KKD06-347
Push-lock, turn-reset (40mm dia.) *See page C1-78, C1-100*	**AR30V2R** KKD06-353	Push-lock, turn-reset Mushroom head (44mm dia.) Support for Padlock *See page C1-78, C1-100*	**AP30VPR** KKD16-075		

Notes: Provided with the ⊖ (Direct opening action)

■ Emergency stop illuminated pushbutton switches (conform to EN418)

Operator	Type	Operator	Type	Operator	Type
Push-lock, turn-reset (Soft-touch 40mm dia.) *See page C1-79, C1-100*	**AR30V0L** KKD06-350	Push-lock, turn-reset (40mm dia.) *See page C1-79, C1-100*	**AR30V2L** KKD06-350	Push-lock, turn-reset Mushroom head (44mm dia.) Support for Padlock *See page C1-79, C1-100*	**AP30VPL** KKD16-074

Note: Provided with the ⊖ (Direct opening action)
: *See page C1-295*

AR30 and DR30
Quick reference guide

■ Selector switches

Operator	Type	Operator	Type	Operator	Type
Knob *See page C1-80, C1-101*	**AR30PR, PCR** KKD05-168	Key *See page C1-80, C1-101*	**AR30JR, JCR** KKD09-023	Key (Long durability) *See page C1-80, C1-101*	**AR30JAR** KKD09-021
Lever *See page C1-80, C1-101*	**AR30WR, WCR** KKD05-169				

C1

■ Illuminated selector switches

Operator	Type
Knob *See page C1-89, C1-101*	**AR30PL** KKD19-103

■ Lever type selector switches

Operator	Type
Lever (metal type) *See page C1-87, C1-101*	**AR30HR** KKD05-115

■ Pilot lights

Lens	Type	Lens	Type	Lens	Type
Dome *See page C1-91, C1-102*	**DR30D0L** KKD05-184	Dome with dimmer control *See page C1-91, C1-103*	**DR30D1L** KKD19-131	Flush square (40mm sq. transparent lens) *See page C1-93, C1-104*	**DR30M4M *** KKD10-145
Extended round *See page C1-91, C1-102*	**DR30E3L** KKD05-179	Flush square (34mm sq. transparent lens) *See page C1-93, C1-104*	**DR30F4M *** KKD10-143		
Faceted *See page C1-91, C1-103*	**DR30K0L** KKD19-101	Flush rectangular (Transparent lens) *See page C1-93, C1-104*	**DR30F4N *** KKD10-144		

Note: With resistor unit and resistor types: Not approved standard
* LED 12V AC type: Not approved standard
: *See page C1-295*

■ Joy stick selector switches

Handle	Type	Handle	Type	Handle	Type
Ball type *See page C1-94, C1-105*	**AR30A0, A5** KKD18-415	Ball type with lock *See page C1-94, C1-105*	**AR30A1, A6** KKD18-416	Rubber cap type *See page C1-94, C1-105*	**AR30A2, A7** KKD18-417

■ Buzzers

Sound	Type	Sound	Type	Sound	Type
Electronic sound *See page C1-95, C1-106*	**DR30B5** KKD08-058	Electronic sound (economy) *See page C1-95, C1-106*	**DR30B6** KK02-17	Electronic sound (IP54) *See page C1-95, C1-106*	**DR30B8** KKD19-115

AR30 and DR30
Type number nomenclature

Illuminated pushbuttons

AR30 E0L – 10 E3 R □
① ② ③ ④ ⑤ ⑥

① **Product category**
AR30: 30mm-dia. illuminated pushbutton
30mm-dia. emergency stop illuminated pushbutton

② **Operator**
• Illuminated pushbutton
E0L: Extended round head
E5L: Extended round head (Alternate)
G4L: Extended with transparent full guard (24mm dia.)
G9L: Extended with transparent full guard (24mm dia. alternate)
G2L: Extended with full guard (24mm dia. with openings)
G7L: Extended with full guard (24mm dia. with openings, alternate)
G3L: Extended with full guard (24mm dia.)
G8L: Extended with full guard (24mm dia. alternate)
V5L: Push-lock, turn-reset (40mm dia. with white arrow) *1
Q7L: Push-pull
• Emergency stop illuminated pushbutton
V0L: Push-lock, turn-reset (Soft-touch 40mm dia.)
V2L: Push-lock, turn-reset (40mm dia.)
VPL: Push-lock, turn-reset (44mm dia. Support for Padlock)

③ **Contact arrangement**

10: 1NO	30: 3NO
01: 1NC	03: 3NC
11: 1NO+1NC	33: 3NO+3NC
20: 2NO	40: 4NO
02: 2NC	04: 4NC
22: 2NO+2NC	50: 5NO
	05: 5NC

④ **Lamp voltage**
• Incandescent lamp
54: 5.5V AC/DC, without transformer
C4: 15V AC/DC, without transformer
D4: 20V AC/DC, without transformer
E4: 24V AC/DC, without transformer
H4: 100-110V AC, with transformer
L4: 115-127V AC, with transformer
M4: 200-220V AC, with transformer
Q4: 230-254V AC, with transformer
S4: 350-380V AC, with transformer
T4: 400-440V AC, with transformer
V4: 480V AC, with transformer
W4: 500-550V AC, with transformer
• LED lamp
A3: 6V AC, without transformer
63: 6V DC, without transformer
B3: 12V AC/DC, without transformer
C3: 15V AC/DC, without transformer
E3: 24V AC/DC, without transformer
H3: 100-110V AC, with transformer
L3: 115-127V AC, with transformer
M3: 200-220V AC, with transformer
Q3: 230-254V AC, with transformer
S3: 350-380V AC, with transformer
T3: 400-440V AC, with transformer
V3: 480V AC, with transformer
W3: 500-550V AC, with transformer

⑤ **Color of lens**

G: Green	Y: Yellow
R: Red *2	A: Orange
W: White	S: Blue

⑥ **Special product**
Z9: Resisting water-soluble cutting oils and heat
Z8: With a contact protection cover
Z4: Resisting sulfuration gas
ZB: Meeting IP2X finger-protection standards
ZM: Metal nut

Notes: *1 Products with no trigger action mechanism. These products cannot be used as emergency stop switches that comply with EN standards.
*2 Button color of emergency stop illuminated switches are Red only.
• The manufacturing range varies depending on the model. For details, refer to the contents of this catalog.

AR30 and DR30
Type number nomenclature

Pushbuttons

AR30 E0R – 10 R □ □
① ② ③ ④ ⑤ ⑥

① **Product category**
AR30: 30mm-dia. pushbutton
30mm-dia. emergency stop pushbutton

② **Operator**
• Pushbutton switch
F0R: Flush round head
F5R: Flush round head (Alternate)
E0R: Extended round head
E5R: Extended round head (Alternate)
FAR: Flush round head (Symbol mark type)
FBR: Flush round head (Symbol mark type, alternate)
EAR: Extended round head (Symbol mark type)
EBR: Extended round head (Symbol mark type, alternate)
M0R: Mushroom head (40mm dia.)
M5R: Mushroom head (40mm dia. Alternate)
M4R: Mushroom head (29mm dia.)
G1R: Extended with full guard (24mm dia.)
G6R: Extended with full guard (24mm dia. Alternate)
GPR: Pin lock
G0R: Extended with half guard
G5R: Extended with half guard (Alternate)
M3R: Mushroom head with full guard (40mm dia.)
M8R: Mushroom head with full guard (40mm dia. Alternate)
GSR: Mushroom head with full guard (35mm dia. metal nut)
B0R: Giant head
B1R: Giant head with guard
B2R: Giant head with full guard
B3R: Giant head with full guard
S1R: Pushbutton with selector ring (2-position)
S2R: Pushbutton with selector ring (2-position)
S3R: Pushbutton with selector ring (2-position)
S6R: Pushbutton with selector ring (2-position)
N0R: Push, turn-lock
V5R: Push-lock, turn-reset (40mm dia. with white arrow) *1
FVR: Pushbutton with emergency operating cap
• Emergency stop pushbutton switch
V0R: Push-lock, turn-reset (Soft-touch 40mm dia.)
V2R: Push-lock, turn-reset (40mm dia.)
V1R: Push-lock, turn-reset (Soft-touch 65mm dia.)
Q2R: Push-lock, pull-reset (35mm dia.)
VPR: Push-lock, turn-reset (44mm dia. Support for Padlock)

③ **Contact arrangement**

10: 1NO	30: 3NO
01: 1NC	03: 3NC
11: 1NO+1NC	33: 3NO+3NC
20: 2NO	40: 4NO
02: 2NC	04: 4NC
22: 2NO+2NC	44: 4NO+4NC
	50: 5NO
	05: 5NC

④ **Color of button**

G: Green	Y: Yellow
R: Red*2	A: Orange
B: Black	S: Blue
W: White	C: Clear (For AR30FAR, FBR, EAR, EBR)
T: Green, Red, Black (For AR30F0R)	

⑤ **Symbol mark (For AR30FAR, FBR, EAR, EBR)**

Symbol mark	◯		I		Ⓣ		◯	I	Ⓣ
Color of button	White	Black	White	Black	White	Black	Clear		
Color of mark	Red		Green		Green		Black		
Code	01	02	03	04	11	12	02B	04B	12B

⑥ **Special product**
Z9: Resisting water-soluble cutting oils and heat
Z8: With a contact protection cover
Z4: Resisting sulfuration gas
ZB: Meeting IP2X finger-protection standards
ZM: Metal nut

Notes: *1 Products with no trigger action mechanism. These products cannot be used as emergency stop switches that comply with EN standards.
*2 Button color of emergency stop switches are Red only.
• The manufacturing range varies depending on the model. For details, refer to the contents of this catalog.

AR30 and DR30
Type number nomenclature

Selector and illuminated selector switches

AR30 PL – 2 □ 10 E3 G □ □
① ② ③ ④ ⑤ ⑥ ⑦ ⑧ ⑨

① **Product category**
AR30: 30mm dia. selector switch and illuminated selector switch

② **Operator**
- Selector switch

PR: Knob
PCR: Knob operated control type
WR: Lever
WCR: Lever operated control type
JR: Key
JCR: Key operated control type
JAR: Key (Long durability)
HR: Lever (Metal type)
- Illuminated selector switch

PL: Knob

③ **Operation**
2: 2-position, maintained
0: 2-position, spring return
3: 3-position, maintained
6: 3-position, spring/manual return (Left to center)
7: 3-position, spring/manual return (Right to center)
1: 3-position, spring return
4: 4-position, maintained (For AR30PCR, WCR)
5: 5-position, maintained (For AR30PCR, WCR)

④ **Key removable position**
A: Left
B: Left and right
C: Left, right and center
D: Right
E: Center
F: Right and center
G: Left and center

⑤ **Contact arrangement**

10: 1NO	30: 3NO
01: 1NC	03: 3NC
11: 1NO+1NC	33: 3NO+3NC
20: 2NO	40: 4NO
02: 2NC	04: 4NC
22: 2NO+2NC	44: 4NO+4NC
	50: 5NO
	05: 5NC

Note: Control type: *See page C1-84 to C1-86*

⑥ **Lamp voltage**
- Incandescent lamp

54: 5.5V AC/DC, without transformer
C4: 15V AC/DC, without transformer
D4: 20V AC/DC, without transformer
E4: 24V AC/DC, without transformer
H4: 100-110V AC, with transformer
L4: 115-127V AC, with transformer
M4: 200-220V AC, with transformer
Q4: 230-254V AC, with transformer
S4: 350-380V AC, with transformer
T4: 400-440V AC, with transformer
V4: 480V AC, with transformer
W4: 500-550V AC, with transformer
- LED lamp

A3: 6V AC, without transformer
63: 6V DC, without transformer
B3: 12V AC/DC, without transformer
C3: 15V AC/DC, without transformer
E3: 24V AC/DC, without transformer
H3: 100-110V AC, with transformer
L3: 115-127V AC, with transformer
M3: 200-220V AC, with transformer
Q3: 230-254V AC, with transformer
S3: 350-380V AC, with transformer
T3: 400-440V AC, with transformer
V3: 480V AC, with transformer
W3: 500-550V AC, with transformer

⑦ **Color of knob**
B: Black (Not available for illuminated selector switch)
G: Green
R: Red
W: White (Not available for selector switch)
Y: Yellow (Not available for selector switch)
A: Orange (Not available for selector switch)
S: Blue (Not available for selector switch)

⑧ **Key type No.**
A, B, C, D, E or F
("A" is standard)

⑨ **Special product**
Z9: Resisting water-soluble cutting oils and heat
Z8: With a contact protection cover
Z4: Resisting sulfuration gas
ZB: Meeting IP2X finger-protection standards
ZM: Metal nut

Note: • The manufacturing range varies depending on the model. For details, refer to the contents of this catalog.

AR30 and DR30
Type number nomenclature

Pilot lights

DR30 D0L – E3 W □
① ② ③ ④ ⑤

① **Product category**
DR30: 30mm dia. pilot light

② **Lens**
D0L: Dome
E3L: Extended round
K0L: Faceted
D1L: Dome with dimmer control
F4M: Flush square (34mm sq. transparent lens)
F4N: Flush rectangular (Transparent lens)
M4M: Flush square (40mm sq. transparent lens)

③ **Lamp voltage**
• Incandescent lamp
54: 5.5V AC/DC, without transformer
C4: 15V AC/DC, without transformer
D4: 20V AC/DC, without transformer
E4: 24V AC/DC, without transformer
H4: 100-110V AC, with transformer
L4: 115-127V AC, with transformer
M4: 200-220V AC, with transformer
Q4: 230-254V AC, with transformer
S4: 350-380V AC, with transformer
T4: 400-440V AC, with transformer
V4: 480V AC, with transformer
W4: 500-550V AC, with transformer
FQ: 50V DC, with resistor*
H8: 100-110V AC, short-body with transformer
L8: 115-127V AC, short-body with transformer
M8: 200-220V AC, short-body with transformer

• LED lamp
A3: 6V AC, without transformer
63: 6V DC, without transformer
B3: 12V AC/DC, without transformer
C3: 15V AC/DC, without transformer
E3: 24V AC/DC, without transformer
H3: 100-110V AC, with transformer
L3: 115-127V AC, with transformer
M3: 200-220V AC, with transformer
Q3: 230-254V AC, with transformer
S3: 350-380V AC, with transformer
T3: 400-440V AC, with transformer
V3: 480V AC, with transformer
W3: 500-550V AC, with transformer
H7: 110V DC, with resistor unit
FR: 50V DC, with resistor*
HR: 110V DC, with resistor*
MR: 220V DC, with resistor*
(For DR30F4M, F4N, M4M type)
65: 6V DC, without transformer
25: 12V AC, without transformer
B5: 12V AC/DC, without transformer
E5: 24V AC/DC, without transformer
H5: 100-110V AC, with transformer
L5: 115-127V AC, with transformer
M5: 200-220V AC, with transformer
Q5: 230-254V AC, with transformer
S5: 350-380V AC, with transformer
T5: 400-440V AC, with transformer
V5: 480V AC, with transformer
W5: 500-550V AC, with transformer
HE: 110V DC, with resistor unit
H9: 100-110V AC, short-body with transformer
L9: 115-127V AC, short-body with transformer
M9: 200-220V AC, short-body with transformer

Note: * DR30D0L, K0L type only

④ **Color of lens or color plate**
G: Green
R: Red
W: White
Y: Yellow
A: Orange
S: Blue

⑤ **Special product**
Z9: Resisting water-soluble cutting oils and heat
Z4: Resisting sulfuration gas
ZB: Meeting IP2X finger-protection standards
ZM: Metal nut

Note: • The manufacturing range varies depending on the model. For details, refer to the contents of this catalog.

AR30 and DR30
Type number nomenclature

Joy stick selector switches

AR30A 0 N – A0A0 B
① ②③ ④ ⑤

① **Product category**
AR30A: 30mm-dia. Joy stick selector switch

② **Handle**
0: Ball type (without lock, manual return)
1: Ball type with lock (manual return)
2: Rubber cap type (without lock, manual return)
5: Ball type (without lock, spring return)
6: Ball type with lock (spring return)
7: Rubber cap type (without lock, spring return)

③ **Terminal**
N: Screw
H: Solder/tab

④ **Contact arrangement**

Contact arrangement		Blank	1NO	1NC	1NO+1NC	2NO	2NC	2NO+2NC
Code	Screw	0	A	B	1	D	E	–
	Solder/tab	0	–	–	1	–	–	2

Operating direction code of contacts

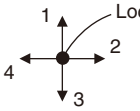

Locked position

1: Upper 2: Right
3: Lower 4: Left

Ex. AR30A0N-A0A0B
1 2 3 4

⑤ **Handle color**
B: Black

Buzzers

DR30B 5 – E B
① ② ③④

① **Product category**
DR30B: 30mm-dia. buzzer

② **Sound**
5: Electronic sound
6: Electronic sound (economy)

8: Electronic sound (IP54)

③ **Operating voltage**

6: 6V DC (Type “5”, “8”)
E: 12-24V AC/DC (Type “6” : 24V DC)

G: 24V AC (Type “6”)
H: 100-110V AC
M: 200-220V AC

④ **Color of head**
B: Black

■ Ordering information

Specify the following:
1. Type number
For the CCC approved product, add the suffix **(CCC)** to the type number

Example: Pushbutton switch AR30F0R-11B**(CCC)**

■ Standards approved

UL508	File No. E44592
CSA C22.2 No.14	File No. LR20479
TÜV: EN60947-5-1	Pushbutton, Illuminated pushbutton: R9551062 Selector, Illuminated selector: R9551060 Pilot lights: R9551061 Joy stick selector switch: R2050803 (Lever switch) Buzzer: J9950091
TÜV: EN60947-5-1 EN60947-5-5	Emergency stop pushbutton Emergency stop illuminated pushbutton : R50028146 : R50274068 (For AR30VP)

■ Specifications (Indoor use)

Description	Pushbutton switch Illuminated pushbutton switch Emergency stop pushbutton switch Emergency stop illuminated pushbutton switch Selector switch Illuminated selector switch	Joy stick selector (Lever switch)	Pilot light
Rated insulation voltage	600V AC/DC *1	250V AC/DC	250V AC/DC *2
Mechanical durability	*See page C1-66*	250,000 operations	–
Electrical durability	500,000 operations at 220V AC 6A 1 million operations at 220V AC 3A (AR30VP type: 100,000 operations)	100,000 operations at 220V AC 1A (Res. load)	–
Operating frequency	1200 operations/hour (On-load factor: 40%) AR30VP type: 900 operations/hour (on-load factor: 40%)		–
Dielectric strength	2500V AC, 1 minute *3 AR30VP type: 2000V AC, 1 minute	2000V AC, 1 minute *4	
Insulation resistance	100MΩ or more (500V DC megger)	100MΩ or more (500V DC megger)	
Rated impulse dielectric strength	6kV (AR30VP type: 2.5kV)	–	6kV
Conditional short-circuit current	1000A	1000A	–
Short-circuit protective device	Fuse 15A (AR30VP type: gG 10A)	Fuse 1A	–
Pollution degree	3		
Vibration	Resonance: 10 to 55Hz, double amplitude 0.1mm *5 Constant: 16.7Hz, double amplitude 3mm		
Shock	Malfunction durability: 100m/s^2 *6 Mechanical durability: 500m/s^2		Mechanical durability: 500m/s^2
Ambient temperature (No condensation or no icing)	-20 to +70°C *8	-5 to +70°C	-20 to +50°C
Storage temperature	-40 to +80°C		
Humidity	45 to 85% RH (within -5 to +40°C)		
Degree of protection	IP65 *7		

Notes: *1 Illuminated type without transformer and AR30VP: 250V AC/DC
*2 Pilot light with transformer: 600V AC
*3 Illuminated type without transformer: 2000V AC, 1 minute
*4 Pilot light with transformer: 2500V AC, 1 minute
*5 Emergency stop type: 10 to 500Hz, double amplitude 0.7mm (acceleration 50m/s^2), according to the test condition of EN60947-5-5 (1998)
*6 Emergency stop type: 150m/s^2
*7 AR30Q7L and DR30D1L type: IP40
*8 AR30VP type: -20 to +60°C, illuminated type: -20 to +50°C

AR30 and DR30
Ratings and specifications

● Mechanical durability

Description		Operations
Pushbutton switch Illuminated pushbutton switch Emergency stop pusubutton switch Emergency stop illuminated pusubutton	Momentary action Alternate action With selector ring Push-lock, turn-reset Push-lock, pull-reset	5 million 1 million 100,000 100,000 30,000
Selector switch	Maintained 1, 2, 3, 4-contact Maintained 5, 6, 7, 8-contact Control type, spring return, spring/manual return	1 million 500,000 200,000
Illuminated selector switch	Maintained Without transformer 1, 2, 3-contact 4-contact With transformer 1, 2-contact 3-contact Spring return, spring/manual return	 1 million 500,000 1 million 500,000 200,000

Note: Key insertion/removal durability for selector switch key types
- Key type 10,000
- Key (Long durability) type 20,000

C1

● Buzzers

Item	DR30B5	DR30B6	DR30B8
Rated insulation voltage	Without transformer: 60V AC/DC With transformer: 250V AC		
Sound level	90dB (0.1m) 70dB (1m)		80dB (0.1m) 60dB (1.0m)
Durability	1000h		1000h
Frequency	2.4 to 3.3kHz	1.9 to 2.5kHz	2.4 to 3.3kHz
Intermittent cycle	Approx. 170-cycle/min	–	Approx. 170-cycle/min
Current consumption	See the table below		
Dielectric strength	Without transformer: 1000V AC 1 minute With transformer: 2000V AC 1 minute		
Insulation resistance	100MΩ or more (500V DC megger)		
Pollution degree	3		
Vibration	Resonance: 10 to 55Hz, double amplitude 0.1mm Constant: 16.7Hz, double amplitude 3.0mm		
Shock	Mechanical durability: 500m/s^2		
Ambient temperature	–20 to +60˚C (No condensation or no icing)		
Storage temperature	–30 to +70˚C		
Humidity	45 to 85%RH (within –5 to 40˚C)		
Degree of protection	IP20		IP54

• Current consumption

Operational voltage	Current consumption DR30B5, DR30B8	DR30B6
		–
6V DC	35mA DC	25mA AC
24V AC	–	45mA AC
24V DC	–	30mA DC
24V AC/DC	40mA AC, 25mA DC	
		–
110V AC	30mA AC	30mA AC
		–
220V AC	15mA AC	15mA AC

■ Contact ratings

• UL/CSA standards

AC (COS ø=0.35)

Contact rated code	120V		240V		480V		600V	
	Making current	Breaking current	Making current	Breaking current	Making current	Breaking current	Making current	Breaking current
A600	60A	6.0A	30A	3.0A	15A	1.5A	12A	1.2A
B300 (AR30VP)	30A	3.0A	15A	1.5A	–	–	–	–

DC $T_{0.95}$= 6P (Max. 300ms)

Description	Contact rated code	Making current · Breaking current		
		125V	250V	301V–600V
Illuminated pushbutton switch Pushbutton (Ring type selector switch: AR30S2R only) Emergency stop pushbutton switch Emergency stop illuminated pushbutton switch (Except the overlap contact types)	P600	1.1A	0.55A	0.2A
	R300 (AR30VP)	0.22A	0.11A	–
Overlap contact types of products shown above Pushbutton (Ring type selector switch: AR30S1R, S6R only) Selector switch (2-position only, except the overlap contact types) Illuminated selector switch (2-position only, except the overlap contact types)	Q600	0.55A	0.27A	0.1A
Pushbutton (Ring type selector switch: AR30S3R only) Selector switch (2-pos./overlap contact type, 3-, 4-, 5-pos. type) Illuminated selector switch (2-pos./overlap contact type, 3-pos. type)	R300	0.22A	0.11A	–

Note: Joy stick selector switches (Lever switches): 250V AC, 5A (Res. load) 125V DC, 0.2A 24V DC, 1A (Res. load)

• EN standard/TÜV approved

Description	Rated operational current			
	Rated thermal current	Rated operational voltage	AC15 (Ind. load) Rated operational current	DC13 (Ind. load) Rated operational current
Illuminated pushbutton switch Pushbutton (Except the selector ring type) Emergency stop pushbutton switch Emergency stop illuminated pushbutton switch Selector switch (2-position) Illuminated selector switch (2-position)	10A (AR30VP: 5A)	24V	6.0A (AR30VP: –)	4.0A (AR30VP: 1.0A)
		120V	6.0A (AR30VP: 3.0A)	–
		125V	–	1.3A (AR30VP: 0.22A)
		240V	6.0A (AR30VP: 1.5A)	– (AR30VP: 0.1A)
		250V	–	0.45A (AR30VP: –)
		480V	2.5A (AR30VP: –)	–
		600V	2.0A (AR30VP: –)	–
Selector switch (3, 4, 5-position) Illuminated selector switch (3-position) Pushbutton with selector ring	10A	24V	6.0A	2.0A
		120V	6.0A	–
		125V	–	0.65A
		240V	6.0A	–
		250V	–	0.23A
		480V	2.5A	–
		600V	2.0A	–
Joy stick selector switch (Lever switch)	5A	24V	–	0.7A
		120V	0.3A	–
		125V	–	0.15A
		240V	0.3A	–

Lamp rated voltage UL/CSA standards, TÜV approved

	LED lamp	Incandescent lamp
Full-voltage (without transformer)	Max. 24V AC/DC	Max. 30V AC/DC
With transformer	Max. 550V AC (Short-body type: Max. 220V AC)	

AR30 and DR30
Ratings and specifications

■ Operating characteristic (1NO+1NC)

Description	Pushbutton Illuminated pushbutton	Emergency stop pushbutton Emergency stop illuminated pushbutton		Selector *2 Illuminated selector		
		Push-lock type	Push-pull type	Maintained	Spring/manual return	Spring return
Ave. required operating force	9N (Push-lock type: 20N)	30N *1 (AR30VP: 40N)	45N	0.15N•m	0.13N•m	0.1N•m
Operating travel	Approx. 6mm (Push-lock type: Approx. 9mm, operation angle: Approx. 45°)	Approx. 9mm (Operation angle: Approx. 45°) (AR30VP: Approx. 7.8mm, operation angle: Approx. 45°)	Approx. 9mm	2-position: Approx. 90° 3-position: Approx. 45° 4-position: Approx. 40° 5-position: Approx. 30°	3-position: Approx. 45°	2-position: Approx. 60° 3-position: Approx. 45°
Required return force	– (Push-lock type: 0.6N•m)	0.6N•m (AR30VP: 0.5N•m)	30N (pull)	0.15N•m	0.13N•m	–

Notes: *1 AR30V2R type: 45N
*2 4-position, 5-position: 2NO+2NC

C1

■ Lamp ratings

• Illuminated pushbuttons, illuminated selectors, pilot lights (round type)

Transformer	Lamp voltage	LED (lamp base: BA9S/13)			Incandescent (lamp base: BA9S/13)		
		Type	Rated voltage	Consumption	Type	Rated voltage	Consumption
Without transformer	5.5V AC/DC	–	–	–	AHX135	6.3V AC/DC	0.9W
	6V AC	APX510-6□	6V AC	Green, red, orange, amber, blue: 7mA AC Yellow: 40mA AC	–	–	–
	6V DC	APX510-D6□	6V DC	Green, red, orange, amber, blue: 11mA DC Yellow: 22mA DC	–	–	–
	12V AC/DC	APX510-12□	12V AC/DC	Green, red, orange, amber, blue: 14mA AC, 11mA DC Yellow: 24mA AC, 22mA DC	–	–	–
	15V AC/DC	APX510-15□	15V AC/DC	Green, red, orange, amber, blue: 13mA AC, 11mA DC Yellow: 24mA AC, 22mA DC	AHX279	18V AC/DC	0.8W
	20V AC/DC	–	–	–	AHX144	24V AC/DC	0.9W
	24V AC/DC	APX510-24□	24V AC/DC	12mA AC, 11mA DC	AHX129	30V AC/DC	0.8W
With transformer (Standard type: AR9T511)	110V AC	APX510-6□	6V AC	1.5VA	AHX135	6.3V AC/DC	2VA
	127V AC						2VA
	220V AC						2VA
	254V AC	APX510-6□	6V AC	2.5VA	AHX135	6.3V AC/DC	2.5VA
	380V AC						2.5VA
	440V AC						2.5VA
	480V AC						2.5VA
	550V AC						2.5VA
With resistor unit (AR9T519-H)	110V DC	APX510-24□	24V AC/DC	1.2W	–	–	–

Notes: • Short body pilot lights: 110V AC, 127V AC, 220V AC only
• Replace the □ mark by the lamp luminous color code, *see page C1-72*

• Pilot lights with resistor

Lamp Voltage	LED (lamp base: E12/15)			Incandescent (lamp base: E12/15)		
	Type	Rated voltage	Consumption	Type	Rated voltage	Consumption
50V DC	APX507-24□ *	24V AC/DC	0.8W	AHX130	18V AC/DC	5W
110V DC			1.7W			10W
220V DC			3.3W			20W

Notes: * White: APX509-24O
• Replace the □ mark by the lamp luminous color code, *see page C1-72*

• **Pilot lights (DR30F4M, F4N, M4M types)**

Transformer	Lamp voltage	LED (lamp base: BA9S/13)			Incandescent (lamp base: BA9S/13)		
		Type	Rated voltage	Consumption	Type	Rated voltage	Consumption
Without transformer	5.5V AC/DC	–	–	–	AHX135	6.3V AC/DC	0.9W
	6V DC	DN6Q005-6□	6V DC	Green, red, amber: 20mA DC White: 33mA DC Yellow: 22mA DC	–	–	–
	12V AC	DN6Q005-2□	12V AC	Red, amber: 18mA AC Green: 10mA AC White: 30mA AC Yellow: 15mA AC	–	–	–
	12V AC/DC	DN6Q005-B□	12V AC/DC	Red, amber: 22mA AC, 20mA DC Green: 13mA AC, 10mA DC White: 36mA AC, 30mA DC Yellow: 26mA AC, 22mA DC	–	–	–
	15V AC/DC	–	–	–	AHX279	20V AC/DC	0.8W
	20V AC/DC	–	–	–	AHX144	24V AC/DC	0.9W
	24V AC/DC	DN6Q005-E□	24V AC/DC	Green, red, amber: 11mA AC, 10mA DC White: 12mA AC, 11mA DC Yellow: 14mA AC, 11mA DC	AHX129	30V AC/DC	0.8W
With transformer unit (LED: AR9T557) (Incandescent: AR9T511)	110V AC	DN6Q005-2□	12V AC	3VA	AHX135	6.3V AC/DC	2VA
	127V AC						2VA
	220V AC						2VA
	254V AC						2.5VA
	380V AC						2.5VA
	440V AC						2.5VA
	480V AC						2.5VA
	550V AC						2.5VA
With resistor unit (AR9T519-H)	110V DC	DN6Q005-E□	24V AC/DC	1.4W	–	–	–

Notes: • Replace the □ mark by the lamp luminous color code, *see page C1-72*

• **Emergency stop illuminated pushbuttons (AR30VPL type)**

Transformer	Lamp	Voltage	Rated voltage	Consumption
Without transformer	LED	24V AC/DC	24V AC/DC	7.5mA AC 7.5mA DC

Notes: The LED lamp of these products cannot be replaced.

AR30 and DR30
Ratings and specifications

■ Lamp durability

Lamp	Durability (reference)	Judgement criterion
LED	Approx. 30000h	When brightness is less than 50% of initial value
Incandescent	Approx. 5000h (AC)	When the bulb burns out

Notes: • The operating voltage for incandescent lamps is set at 80 to 90% of the lamp's rated voltage.
• The durability of LED lamp is a mean value in all colors.

Estimated durability for LED lamps

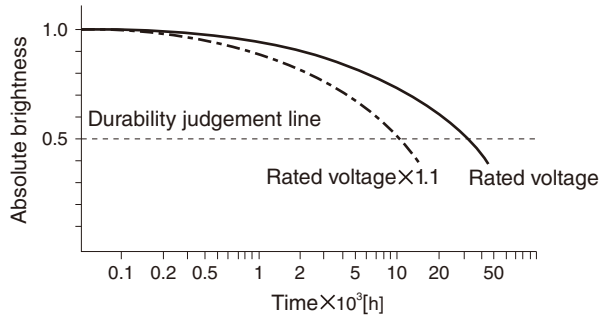

Notes: • Durability at Ta=25˚C
• Durability is affected by temperature, humidity, and voltage fluctuation.

Incandescent lamp voltage characteristics

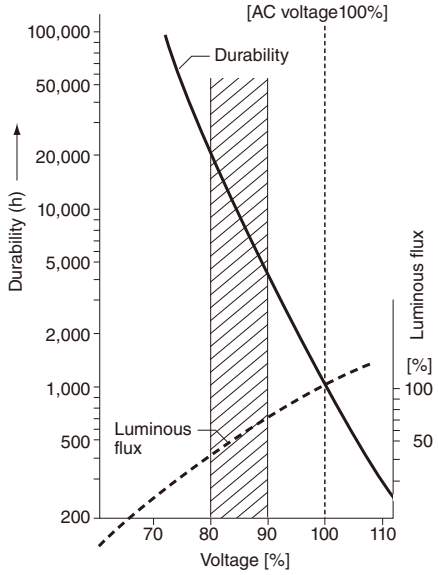

■ Combination of lens color and LED luminous color

Button color (lens or color plate)		LED lamp (high-brightness)			LED lamp (high-brightness)	
Color	Code	Luminous color	Type	Type *1	Luminous color	Type *2
Green	G	Green	APX510-■G	APX507-24G	Green	DN6Q005-■G
Red	R	Red	APX510-■R	APX507-24R	Red	DN6Q005-■R
White	W	Orange	APX510-■O	APX509-24O	White	DN6Q005-■W
Yellow	Y	Yellow	APX510-■Y	APX507-24Y	Yellow	DN6Q005-■Y
Orange	A	Amber	APX510-■A	APX507-24A	Amber	DN6Q005-■A
Blue	S	Blue	APX510-■S	APX507-24S	–	–

Notes: *1 For pilot light with resistor
*2 For DR30 F4M, F4N, M4M type
• Replace the ■ mark by the lamp voltage code, *see page C1-70, C1-71*

■ Illuminated pushbutton switches

Operator	Trans-former	Contact	LED lamp Momentary action Type	LED lamp Alternate action Type	Incandescent lamp Momentary action Type	Incandescent lamp Alternate action Type
Extended round head KKD05-163	Without	1NO	**AR30E0L-10■3□**	**AR30E5L-10■3□**	**AR30E0L-10■4□**	**AR30E5L-10■4□**
		1NC	**AR30E0L-01■3□**	**AR30E5L-01■3□**	**AR30E0L-01■4□**	**AR30E5L-01■4□**
		1NO+1NC	**AR30E0L-11■3□**	**AR30E5L-11■3□**	**AR30E0L-11■4□**	**AR30E5L-11■4□**
		2NO+2NC	**AR30E0L-22■3□**	—	**AR30E0L-22■4□**	—
	With	1NO	**AR30E0L-10■3□**	**AR30E5L-10■3□**	**AR30E0L-10■4□**	**AR30E5L-10■4□**
		1NC	**AR30E0L-01■3□**	**AR30E5L-01■3□**	**AR30E0L-01■4□**	**AR30E5L-01■4□**
		1NO+1NC	**AR30E0L-11■3□**	**AR30E5L-11■3□**	**AR30E0L-11■4□**	**AR30E5L-11■4□**
Extended with transparent full guard (24mm dia.) KKD05-164	Without	1NO	**AR30G4L-10■3□**	**AR30G9L-10■3□**	**AR30G4L-10■4□**	**AR30G9L-10■4□**
		1NC	**AR30G4L-01■3□**	**AR30G9L-01■3□**	**AR30G4L-01■4□**	**AR30G9L-01■4□**
		1NO+1NC	**AR30G4L-11■3□**	**AR30G9L-11■3□**	**AR30G4L-11■4□**	**AR30G9L-11■4□**
		2NO+2NC	**AR30G4L-22■3□**	—	**AR30G4L-22■4□**	—
	With	1NO	**AR30G4L-10■3□**	**AR30G9L-10■3□**	**AR30G4L-10■4□**	**AR30G9L-10■4□**
		1NC	**AR30G4L-01■3□**	**AR30G9L-01■3□**	**AR30G4L-01■4□**	**AR30G9L-01■4□**
		1NO+1NC	**AR30G4L-11■3□**	**AR30G9L-11■3□**	**AR30G4L-11■4□**	**AR30G9L-11■4□**
Extended with full guard (24mm dia. with openings) KKD19-121	Without	1NO	**AR30G2L-10■3□**	**AR30G7L-10■3□**	**AR30G2L-10■4□**	**AR30G7L-10■4□**
		1NC	**AR30G2L-01■3□**	**AR30G7L-01■3□**	**AR30G2L-01■4□**	**AR30G7L-01■4□**
		1NO+1NC	**AR30G2L-11■3□**	**AR30G7L-11■3□**	**AR30G2L-11■4□**	**AR30G7L-11■4□**
		2NO+2NC	**AR30G2L-22■3□**	—	**AR30G2L-22■4□**	—
	With	1NO	**AR30G2L-10■3□**	**AR30G7L-10■3□**	**AR30G2L-10■4□**	**AR30G7L-10■4□**
		1NC	**AR30G2L-01■3□**	**AR30G7L-01■3□**	**AR30G2L-01■4□**	**AR30G7L-01■4□**
		1NO+1NC	**AR30G2L-11■3□**	**AR30G7L-11■3□**	**AR30G2L-11■4□**	**AR30G7L-11■4□**
Extended with full guard (24mm dia.) KKD19-111	Without	1NO	**AR30G3L-10■3□**	**AR30G8L-10■3□**	**AR30G3L-10■4□**	**AR30G8L-10■4□**
		1NC	**AR30G3L-01■3□**	**AR30G8L-01■3□**	**AR30G3L-01■4□**	**AR30G8L-01■4□**
		1NO+1NC	**AR30G3L-11■3□**	**AR30G8L-11■3□**	**AR30G3L-11■4□**	**AR30G8L-11■4□**
		2NO+2NC	**AR30G3L-22■3□**	—	**AR30G3L-22■4□**	—
	With	1NO	**AR30G3L-10■3□**	**AR30G8L-10■3□**	**AR30G3L-10■4□**	**AR30G8L-10■4□**
		1NC	**AR30G3L-01■3□**	**AR30G8L-01■3□**	**AR30G3L-01■4□**	**AR30G8L-01■4□**
		1NO+1NC	**AR30G3L-11■3□**	**AR30G8L-11■3□**	**AR30G3L-11■4□**	**AR30G8L-11■4□**
Push-lock, turn-reset (40mm dia. with white arrow) 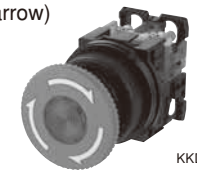 KKD06-348	Without	1NO	—	**AR30V5L-10■3□**	—	**AR30V5L-10■4□**
		1NC	—	**AR30V5L-01■3□**	—	**AR30V5L-01■4□**
		1NO+1NC	—	**AR30V5L-11■3□**	—	**AR30V5L-11■4□**
		3NC	—	**AR30V5L-03■3□**	—	**AR30V5L-03■4□**
	With	1NO	—	**AR30V5L-10■3□**	—	**AR30V5L-10■4□**
		1NC	—	**AR30V5L-01■3□**	—	**AR30V5L-01■4□**
		1NO+1NC	—	**AR30V5L-11■3□**	—	**AR30V5L-11■4□**
Push-pull (35mm dia.) KKD18-414	Without	1NO+1NC	**AR30Q7L-11■3□**	—	**AR30Q7L-11■4□**	—
	With	1NO+1NC	**AR30Q7L-11■3□**	—	**AR30Q7L-11■4□**	—

Note: ■ □ *See page C1-74*

• **Lens color**

Replace the □ mark by the lens color code

Color	Green	Red	White	Blue	Yellow	Orange
Code	G	R	W	S	Y	A

Note: AR30V5L type: Red, yellow only

• **Contact arrangements**

Contact arrangements other than above are available

Contact arrangement	1NO	1NC	1NO+1NC	2NO	2NC	3NO
Code	10	01	11	20	02	30

Contact arrangement	3NC	2NO+2NC	4NO	4NC	5NO	5NC
Code	03	22	40	04	50	05

Note: AR30Q7L type: 1NO + 1NC only

Available numbers of contact blocks

Operation	Without transformer	With transformer
Momentary action	6-contact block	4-contact block
Alternate action Push-lock, turn-reset	3-contact block	2-contact block

• **Voltage**

Replace the ■ mark by the lamp voltage code

Transformer		Code LED	Incandescent
Without transformer	6V DC	6	—
	6V AC	A	—
	5.5V AC/DC	—	5
	12V AC/DC	B	—
	15V AC/DC	C	C
	20V AC/DC	—	D
	24V AC/DC	E	E
With transformer	100-110V AC	H	H
	115-127V AC	L	L
	200-220V AC	M	M
	230-254V AC	Q	Q
	350-380V AC	S	S
	400-440V AC	T	T
	480V AC	V	V
	500-550V AC	W	W

• **Contact operation (AR30Q7L)**

Contact block		Button position		
No.	Type	Pull	Free	Push
(1)	NC	●		
(2)	NC	▬		

● Contact closed

• **Position of contact block**

AR30Q7L (without transformer)

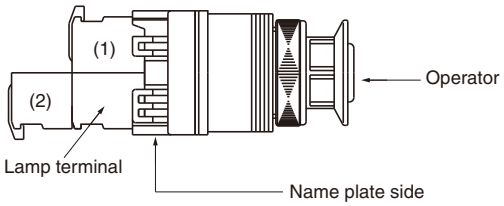

AR30Q7L (with transformer)

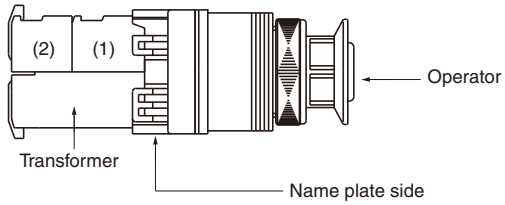

■ Pushbutton switches

Operator	Contact	Momentary action Type	Alternate action Type
Flush round head KKD05-167	1NO	**AR30F0R-10□**	**AR30F5R-10□**
	1NC	**AR30F0R-01□**	**AR30F5R-01□**
	1NO+1NC	**AR30F0R-11□**	**AR30F5R-11□**
	2NO	**AR30F0R-20□**	**AR30F5R-20□**
	2NC	**AR30F0R-02□**	**AR30F5R-02□**
	2NO+2NC	**AR30F0R-22□**	**AR30F5R-22□**
Extended round head KKD05-165	1NO	**AR30E0R-10□**	**AR30E5R-10□**
	1NC	**AR30E0R-01□**	**AR30E5R-01□**
	1NO+1NC	**AR30E0R-11□**	**AR30E5R-11□**
	2NO	**AR30E0R-20□**	**AR30E5R-20□**
	2NC	**AR30E0R-02□**	**AR30E5R-02□**
	2NO+2NC	**AR30E0R-22□**	**AR30E5R-22□**
Flush round head symbol mark type AF98-195	1NO	**AR30FAR-10C■**	**AR30FBR-10C■**
	1NC	**AR30FAR-01C■**	**AR30FBR-01C■**
	1NO+1NC	**AR30FAR-11C■**	**AR30FBR-11C■**
	2NO	**AR30FAR-20C■**	**AR30FBR-20C■**
	2NC	**AR30FAR-02C■**	**AR30FBR-02C■**
	2NO+2NC	**AR30FAR-22C■**	**AR30FBR-22C■**
Extended round head symbol mark type AF98-194	1NO	**AR30EAR-10C■**	**AR30EBR-10C■**
	1NC	**AR30EAR-01C■**	**AR30EBR-01C■**
	1NO+1NC	**AR30EAR-11C■**	**AR30EBR-11C■**
	2NO	**AR30EAR-20C■**	**AR30EBR-20C■**
	2NC	**AR30EAR-02C■**	**AR30EBR-02C■**
	2NO+2NC	**AR30EAR-22C■**	**AR30EBR-22C■**
Mushroom head (40mm dia.) KKD05-162	1NO	**AR30M0R-10□**	**AR30M5R-10□**
	1NC	**AR30M0R-01□**	**AR30M5R-01□**
	1NO+1NC	**AR30M0R-11□**	**AR30M5R-11□**
	2NO	**AR30M0R-20□**	**AR30M5R-20□**
	2NC	**AR30M0R-02□**	**AR30M5R-02□**
	2NO+2NC	**AR30M0R-22□**	**AR30M5R-22□**
Mushroom head (29mm dia.) AF95-8	1NO	**AR30M4R-10□**	—
	1NC	**AR30M4R-01□**	—
	1NO+1NC	**AR30M4R-11□**	—
	2NO	**AR30M4R-20□**	—
	2NC	**AR30M4R-02□**	—
	2NO+2NC	**AR30M4R-22□**	—
Extended with full guard (24mm dia.) KKD19-125	1NO	**AR30G1R-10□**	**AR30G6R-10□**
	1NC	**AR30G1R-01□**	**AR30G6R-01□**
	1NO+1NC	**AR30G1R-11□**	**AR30G6R-11□**
	2NO	**AR30G1R-20□**	**AR30G6R-20□**
	2NC	**AR30G1R-02□**	**AR30G6R-02□**
	2NO+2NC	**AR30G1R-22□**	**AR30G8R-22□**

Operator	Contact	Momentary action Type	Alternate action Type
Extended with half guard KKD19-105	1NO	**AR30G0R-10□**	**AR30G5R-10□**
	1NC	**AR30G0R-01□**	**AR30G5R-01□**
	1NO+1NC	**AR30G0R-11□**	**AR30G5R-11□**
	2NO	**AR30G0R-20□**	**AR30G5R-20□**
	2NC	**AR30G0R-02□**	**AR30G5R-02□**
	2NO+2NC	**AR30G0R-22□**	**AR30G5R-22□**
Pin lock AF96-240	1NO	**AR30GPR-10□**	—
	1NC	**AR30GPR-01□**	—
	1NO+1NC	**AR30GPR-11□**	—
	2NO	**AR30GPR-20□**	—
	2NC	**AR30GPR-02□**	—
	2NO+2NC	**AR30GPR-22□**	—
Mushroom head with full guard (40mm dia.) AF95-17	1NO	**AR30M3R-10□**	**AR30M8R-10□**
	1NC	**AR30M3R-01□**	**AR30M8R-01□**
	1NO+1NC	**AR30M3R-11□**	**AR30M8R-11□**
	2NO	**AR30M3R-20□**	**AR30M8R-20□**
	2NC	**AR30M3R-02□**	**AR30M8R-02□**
	2NO+2NC	**AR30M3R-22□**	**AR30M8R-22□**
Mushroom head with full guard (35mm dia. metal nut) KKD19-133	1NO	**AR30GSR-10□**	—
	1NC	**AR30GSR-01□**	—
	1NO+1NC	**AR30GSR-11□**	—
	2NO	**AR30GSR-20□**	—
	2NC	**AR30GSR-02□**	—
	2NO+2NC	**AR30GSR-22□**	—
Giant head KKD19-141	1NO	**AR30B0R-10□**	—
	1NC	**AR30B0R-01□**	—
	1NO+1NC	**AR30B0R-11□**	—
	2NO	**AR30B0R-20□**	—
	2NC	**AR30B0R-02□**	—
	2NO+2NC	**AR30B0R-22□**	—
Giant head with guard KKD19-139	1NO	**AR30B1R-10□**	—
	1NC	**AR30B1R-01□**	—
	1NO+1NC	**AR30B1R-11□**	—
	2NO	**AR30B1R-20□**	—
	2NC	**AR30B1R-02□**	—
	2NO+2NC	**AR30B1R-22□**	—
Giant head with full guard KKD19-137	1NO	**AR30B2R-10□**	—
	1NC	**AR30B2R-01□**	—
	1NO+1NC	**AR30B2R-11□**	—
	2NO	**AR30B2R-20□**	—
	2NC	**AR30B2R-02□**	—
	2NO+2NC	**AR30B2R-22□**	—

Note: ■ □ *See page C1-76*

AR30

Operator	Contact	Momentary action Type	Alternate action Type
Giant head with full guard KKD19-135	1NO	**AR30B3R-10□**	—
	1NC	**AR30B3R-01□**	—
	1NO+1NC	**AR30B3R-11□**	—
	2NO	**AR30B3R-20□**	—
	2NC	**AR30B3R-02□**	—
	2NO+2NC	**AR30B3R-22□**	—
Push, turn-lock KKD19-129	1NO	**AR30N0R-10□**	—
	1NC	**AR30N0R-01□**	—
	1NO+1NC	**AR30N0R-11□**	—
	2NO	**AR30N0R-20□**	—
	2NC	**AR30N0R-02□**	—
	2NO+2NC	**AR30N0R-22□**	—

Operator	Contact	Momentary action Type	Alternate action Type
Push-lock, turn-reset (40mm dia. with white arrow) KKD08-051	1NO	—	**AR30FVR-10□**
	1NC	—	**AR30FVR-01□**
	1NO+1NC	—	**AR30FVR-11□**
	2NO	—	**AR30FVR-20□**
	2NC	—	**AR30FVR-02□**
	2NO+2NC	—	**AR30FVR-22□**
Pushbutton with emergency operating cap KKD19-119	1NO	**AR30V5R-10□**	—
	1NC	**AR30V5R-01□**	—
	1NO+1NC	**AR30V5R-11□**	—
	2NO	**AR30V5R-20□**	—
	2NC	**AR30V5R-02□**	—
	2NO+2NC	**AR30V5R-22□**	—

C1

• Button color

Replace the □ mark by the button color code

Color	Green	Red	White	Blue	Yellow	Orange	Black
Code	G	R	W	S	Y	A	B

Note: AR30V5R type: Red, yellow, black only

• Available numbers of contact blocks

Momentary action	Alternate action Push-lock, turn-reset
8-contact block	4-contact block

• Contact arrangements

Contact arrangements other than above are available

Contact arrangement	1NO	1NC	1NO+1NC	2NO	2NC	3NO	3NC
Code	10	01	11	20	02	30	03

Contact arrangement	2NO+2NC	4NO	4NC	5NO	5NC	3NO+3NC	4NO+4NC
Code	22	40	04	50	05	33	44

• Symbol mark (For AR30FAR, FBR, EAR, EBR)

Replace the ■ mark by the symbol mark code

Symbol mark	◯		I		Ⓣ		◯	I	Ⓣ
Color of button	White	Black	White	Black	White	Black	Clear		
Color of mark	Red		Green		Green		Black		
Code	01	02	03	04	11	12	02B	04B	12B

Fuji Electric FA Components & Systems Co., Ltd.
Information subject to change without notice

Operator	Contact (The following contact is only available.)	Button color	Type	Contact operation					
				Contact block		Left		Right	
				Mounting position	Type	Free	Depressed	Free	Depressed
Pushbutton with selector ring (2-position) KKD05-166	2NO+2NC	Green Red Black White Yellow Orange Blue	**AR30S1R-22G** **AR30S1R-22R** **AR30S1R-22B** **AR30S1R-22W** **AR30S1R-22Y** **AR30S1R-22A** **AR30S1R-22S**	(1)	NC	—	—	●	—
				(2)	NC	—	—	●	—
				(3)	NO	—	●	—	●
				(4)	NO	—	●	—	●
	2NO	Green Red Black White Yellow Orange Blue	**AR30S2R-20G** **AR30S2R-20R** **AR30S2R-20B** **AR30S2R-20W** **AR30S2R-20Y** **AR30S2R-20A** **AR30S2R-20S**	(1)	NO	—	●	—	—
				(2)	NO	—	—	—	●
	2NO+2NC	Green Red Black White	**AR30S2R-22G** **AR30S2R-22R** **AR30S2R-22B** **AR30S2R-22W** **AR30S2R-22Y** **AR30S2R-22A** **AR30S2R-22S**	(1)	NC	●	—	▬	
				(2)	NC	▬		●	—
				(3)	NO	—	●	—	—
				(4)	NO	—	—	—	●
	2NO+2NC		**AR30S3R-22G** **AR30S3R-22R** **AR30S3R-22B** **AR30S3R-22W** **AR30S3R-22Y** **AR30S3R-22A** **AR30S3R-22S**	(1)	NC	—	—	▬	
				(2)	NC	▬		—	—
				(3)	NO	—	●	—	—
				(4)	NO	—	—	—	●
	2NO+2NC		**AR30S6R-22G** **AR30S6R-22R** **AR30S6R-22B** **AR30S6R-22W** **AR30S6R-22Y** **AR30S6R-22A** **AR30S6R-22S**	(1)	NC	●	—	—	Locked
				(2)	NC	●	—	—	
				(3)	NO	—	●	●	
				(4)	NO	—	●	●	

Note: (1) to (4): Contact block mounting position

● Contact closed
— Contact open

• **Position of contact block**

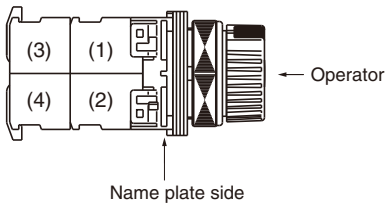

■ Emergency stop pushbutton switches

⊖ (Direct opening action), conform to EN418

Operator	Contact	Type
Push-lock, turn-reset (Soft-touch 40mm dia.) KKD06-353	1NC 1NO+1NC 2NC 3NC 2NO+2NC 4NC	**AR30V0R-01R** **AR30V0R-11R** **AR30V0R-02R** **AR30V0R-03R** **AR30V0R-22R** **AR30V0R-04R**
Push-lock, turn-reset (40mm dia.) KKD06-353	1NC 1NO+1NC 2NC 3NC 2NO+2NC 4NC	**AR30V2R-01R** **AR30V2R-11R** **AR30V2R-02R** **AR30V2R-03R** **AR30V2R-22R** **AR30V2R-04R**
Push-lock, turn-reset (Soft-touch 65mm dia.) KKD16-071	1NC 1NO+1NC 2NC 3NC 2NO+2NC 4NC	**AR30V1R-01R** **AR30V1R-11R** **AR30V1R-02R** **AR30V1R-03R** **AR30V1R-22R** **AR30V1R-04R**
Push-lock, pull-reset (35mm dia.) KKD06-347	1NC 1NO+1NC 2NC	**AR30Q2R-01R** **AR30Q2R-11R** **AR30Q2R-02R**
Push-lock, turn-reset Mushroom head (44mm dia.) Support for Padlock KKD16-075	1NC 1NO+1NC 2NC 1NO+2NC 1NO+3NC 4NC 2NO+4NC	**AR30VPR-01R** **AR30VPR-11R** **AR30VPR-02R** **AR30VPR-12R** **AR30VPR-13R** **AR30VPR-04R** **AR30VPR-24R**

Notes: • Button color: Red only
• Contact arrangements indicated in the table can be supplied.

■ Emergency stop illuminated pushbutton switches

⊖ (Direct opening action), conform to EN418

Operator	Transformer	Contact	LED lamp Type	Incandescent lamp Type
Push-lock, turn-reset (Soft-touch 40mm dia.) KKD06-350	Without	1NC 1NO+1NC 2NC 3NC	**AR30V0L-01■3R** **AR30V0L-11■3R** **AR30V0L-02■3R** **AR30V0L-03■3R**	**AR30V0L-01■4R** **AR30V0L-11■4R** **AR30V0L-02■4R** **AR30V0L-03■4R**
	With	1NC 1NO+1NC 2NC	**AR30V0L-01■3R** **AR30V0L-11■3R** **AR30V0L-02■3R**	**AR30V0L-01■4R** **AR30V0L-11■4R** **AR30V0L-02■4R**
Push-lock, turn-reset (40mm dia.) KKD06-350	Without	1NC 1NO+1NC 2NC 3NC	**AR30V2L-01■3R** **AR30V2L-11■3R** **AR30V2L-02■3R** **AR30V2L-03■3R**	**AR30V2L-01■4R** **AR30V2L-11■4R** **AR30V2L-02■4R** **AR30V2L-03■4R**
	With	1NC 1NO+1NC 2NC	**AR30V2L-01■3R** **AR30V2L-11■3R** **AR30V2L-02■3R**	**AR30V2L-01■4R** **AR30V2L-11■4R** **AR30V2L-02■4R**
Push-lock, turn-reset Mushroom head (44mm dia.) Support for Padlock KKD16-074a	Without	1NC 1NO+1NC 2NC 1NO+2NC 1NO+3NC 4NC 1NO+4NC	**AR30VPL-01E3R** **AR30VPL-11E3R** **AR30VPL-02E3R** **AR30VPL-12E3R** **AR30VPL-13E3R** **AR30VPL-04E3R** **AR30VPL-14E3R**	
	Without	1NC 1NO+1NC 2NC 1NO+2NC 1NO+3NC 4NC 1NO+4NC	**AR30VPL-01EAR**[*1] **AR30VPL-11EAR** **AR30VPL-02EAR** **AR30VPL-12EAR** **AR30VPL-13EAR** **AR30VPL-04EAR** **AR30VPL-14EAR**	

Notes: • Button color: Red only
• Contact arrangements indicated in the table can be supplied.
*1 Interlocked with a lamp circuit.

• Voltage

Replace the ■ mark by the lamp voltage code

Transformer		Code LED	Code Incandescent
Without	6V DC	6	—
	6V AC	A	—
	5V AC/DC	—	5
	12V AC/DC	B	—
	15V AC/DC	C	C
	20V AC/DC	—	D
	24V AC/DC	E	E

Transformer		Code LED	Code Incandescent
With	100-110V AC	H	H
	115-127V AC	L	L
	200-220V AC	M	M
	230-254V AC	Q	Q
	350-380V AC	S	S
	400-440V AC	T	T
	480V AC	V	V
	500-550V AC	W	W

■ Selector switches
2-position

Operator	Operation	Knob color or key removable position	Contact	Type Switch with round bezel	Contact operation (Example)	
					Contact arrangement	Operator position (Left ↖ / Right ↗)
Knob KKD05-168	Maintained each 90°	Color code: B: Black (Standard) Color other than above are available (G: Green R: Red)	1NO 1NC 1NO+1NC 2NO 2NC 2NO+2NC	**AR30PR-210B** **AR30PR-201B** **AR30PR-211B** **AR30PR-220B** **AR30PR-202B** **AR30PR-222B**	1NO (1)	Upper contact ③ ④
	Spring return ↖ 60°		1NO 1NC 1NO+1NC 2NO 2NC 2NO+2NC	**AR30PR-010B** **AR30PR-001B** **AR30PR-011B** **AR30PR-020B** **AR30PR-002B** **AR30PR-022B**	1NC (1)	Upper contact ① ②
Lever KKD05-069	Maintained each 90°		1NO 1NC 1NO+1NC 2NO 2NC 2NO+2NC	**AR30WR-210B** **AR30WR-201B** **AR30WR-211B** **AR30WR-220B** **AR30WR-202B** **AR30WR-222B**	1NO+1NC (1)	Upper contact ③ ④
					(2)	Lower contact ① ②
	Spring return ↖ 60°		1NO 1NC 1NO+1NC 2NO 2NC 2NO+2NC	**AR30WR-010B** **AR30WR-001B** **AR30WR-011B** **AR30WR-020B** **AR30WR-002B** **AR30WR-022B**	2NO+2NC (1)	Upper contact ③ ④
					(3)	③ ④
Key KKD09-023	Maintained each 90°	■: Key removable position ( ): Key type *See page C1-80*	1NO 1NC 1NO+1NC 2NO 2NC 2NO+2NC	**AR30J□R-2■10( )** **AR30J□R-2■01( )** **AR30J□R-2■11( )** **AR30J□R-2■20( )** **AR30J□R-2■02( )** **AR30J□R-2■22( )**		Lower contact
					(2)	① ②
	Spring return ↖ 60°		1NO 1NC 1NO+1NC 2NO 2NC 2NO+2NC	**AR30J□R-0A10( )** **AR30J□R-0A01( )** **AR30J□R-0A11( )** **AR30J□R-0A20( )** **AR30J□R-0A02( )** **AR30J□R-0A22( )**	(4)	① ②

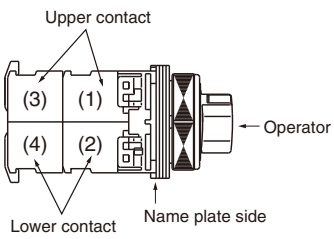

Notes: • (1) to (4): Contact block mounting position
• ①–②, ③–④: Contact block terminal No.
• Contact arrangements: *See page C1-82*

● Contact closed

• Operator
Replace the □ mark by the cylinder key type code
Standard type: Blank
Long durability type: A

3-position

Operator	Operation	Knob color	Contact	Type Switch with round bezel	Contact operation (Example)		
					Contact arrange-ment	Operation position L C R	Operation position L C R
Knob KKD05-168	Maintained each 45°	Color code: B: Black (Standard) Color other than above are available (G: Green R: Red)	1NO+1NC 2NO 2NC 2NO+2NC	**AR30PR-311B** **AR30PR-320B** **AR30PR-302B** **AR30PR-322B**	1NO+1NC (1) (2)	Upper contact ③ ④	Lower contact ① ②
	Spring/ manual return each 45°		1NO+1NC 2NO 2NC 2NO+2NC	**AR30PR-611B** **AR30PR-620B** **AR30PR-602B** **AR30PR-622B**			
	Spring/ manual return each 45°		1NO+1NC 2NO 2NC 2NO+2NC	**AR30PR-711B** **AR30PR-720B** **AR30PR-702B** **AR30PR-722B**	1NO+1NC (1) (2)	Upper contact ③ ④	Lower contact ① ②
	Spring return each 45°		2NO+2NC	**AR30PR-122B**	2NO+2NC (1) (2) (3) (4)	Upper contact ② ③ ④	Lower contact ① ② ③ ④
Lever KKD05-169	Maintained each 45°		1NO+1NC 2NO 2NC 2NO+2NC	**AR30WR-311B** **AR30WR-320B** **AR30WR-302B** **AR30WR-322B**	1NO+1NC (1) (2)	Upper contact ③ ④	Lower contact ① ②
	Spring/ manual return each 45°		1NO+1NC 2NO 2NC 2NO+2NC	**AR30WR-611B** **AR30WR-620B** **AR30WR-602B** **AR30WR-622B**			
	Spring/ manual return each 45°		1NO+1NC 2NO 2NC 2NO+2NC	**AR30WR-711B** **AR30WR-720B** **AR30WR-702B** **AR30WR-722B**	1NO+1NC (1) (2)	Upper contact ③ ④	Lower contact ① ②
	Spring return each 45°		2NO+2NC	**AR30WR-122B**	2NO+2NC (1) (2) (3) (4)	Upper contact ① ② ③ ④	Lower contact ① ② ③ ④

Note: • Contact arrangements: *See page C1-82*

● Contact closed

AR30

Operator	Operation	Key removable position	Contact	Type Switch with round bezel	Contact operation (Example)		
					Contact arrange-ment	Operator position L C R	Operator position L C R
Key KKD09-023	Maintained each 45˚	■: Key removable position ( ): Key type	1NO+1NC 2NO 2NC 2NO+2NC	**AR30J□R-3■11( )** **AR30J□R-3■20( )** **AR30J□R-3■02( )** **AR30J□R-3■22( )**	1NO+1NC (1) (2)	Upper contact ③ ④	Lower contact ① ②
	Spring/ manual return each 45˚		1NO+1NC 2NO 2NC 2NO+2NC	**AR30J□R-6■11( )** **AR30J□R-6■20( )** **AR30J□R-6■02( )** **AR30J□R-6■22( )**			
	Spring/ manual return each 45˚		1NO+1NC 2NO 2NC 2NO+2NC	**AR30J□R-7■11( )** **AR30J□R-7■20( )** **AR30J□R-7■02( )** **AR30J□R-7■22( )**	1NO+1NC (1) (2)	Upper contact ③ ④	Lower contact ① ②
	Spring return each 45˚		2NO+2NC	**AR30J□R-1E22( )**	2NO+2NC (1) (2)	Upper contact ① ②	Lower contact ① ②
					(3) (4)	③ ④	③ ④

Notes: • Operator position L: Left, C: Center, R: Right
• (1) to (4): Contact block mounting position
• ①– ②, ③– ④: Contact block terminal No.

● Contact closed

• Contact arrangements

Contact arrangements other than above are available

Contact arrangement	1NO	1NC	1NO+1NC	2NO	2NC	3NO	3NC
Code	10	01	11	20	02	30	03

Contact arrangement	2NO+2NC	4NO	4NC	5NO	5NC	3NO+3NC	4NO+4NC
Code	22	40	04	50	05	33	44

• Available numbers of contact blocks

Mainted	Spring return Spring/manual return
8-contact block	4-contact block

• Key removable positions

Code	A	B	C	D	E	F	G
Removable position	45° 45°	45° 45°	45° 45°	45° 45°	45° 45°	45° 45°	45° 45°
AR30J□R-2	●	●	–	●	–	–	–
AR30J□R-0	●	–	–	–	–	–	–
AR30J□R-3	●	●	●	●	●	●	●
AR30J□R-6	–	–	–	●	●	●	–
AR30J□R-7	●	–	–	–	●	–	●
AR30J□R-1	–	–	–	–	●	–	–

●: Available –: Not available

• Position of contact block

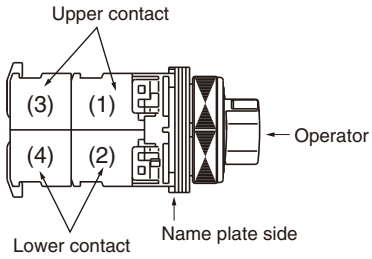

• Key code No.

Replace the ( ) mark with one of the following key code.
A, B, C, D, E and F
Standard key code is A.

• Operator

Replace the □ mark by the cylinder key type code
Standard type: Blank
Long durability type: A

Fuji Electric FA Components & Systems Co., Ltd.
Information subject to change without notice

■ Selector switches (control type)

3-position

Operator	Operation	Knob color or key removable position	Contact arrangement	Type Switch with round bezel
Knob AF95-475	Maintained each 45°	Color code: B: Black (Standard) Color other than above are available (G: Green R: Red)	Replace the ■ mark by the contact arrangement code (shown on next page).	**AR30PCR-3■B**
	Spring/manual return each 45°			**AR30PCR-6■B**
	Spring/manual return each 45°			**AR30PCR-7■B**
	Spring return each 45°			**AR30PCR-7■B**
Lever KK02-140A	Maintained each 45°		Replace the ■ mark by the contact arrangement code (shown on next page).	**AR30WCR-3■B**
	Spring/manual return each 45°			**AR30WCR-6■B**
	Spring/manual return each 45°			**AR30WCR-7■B**
	Spring return each 45°			**AR30WCR-1■B**
Key KKD09-022	Maintained each 45°	Replace the □ mark by the key removable position code: A, B, C, D, E F or G	Replace the ■ mark by the contact arrangement code (shown on next page).	**AR30JCR-3□■( )**
	Spring/manual return each 45°			**AR30JCR-6□■( )**
	Spring/manual return each 45°			**AR30JCR-7□■( )**
	Spring return each 45°			**AR30JCR-1E■( )**

- **Key removable positions**

Code	A	B	C	D	E	F	G
Removable position							
AR30JCR-3	●	●	●	●	●	●	●
AR30JCR-6	–	–	–	●	●	●	–
AR30JCR-7	●	–	–	–	●	–	●
AR30JCR-1	–	–	–	–	●	–	–

●: Available –: Not available

- **Key code No.**
  Replace the ( ) mark with one of the following key code.
  A, B, C, D, E and F
  Standard key code is A.

• Contact arrangement code (Typical example)

Contact arrangement	Contact arrangement code	Contact operation: Contact block: Mounting position	Contact block: Type	Operator position: Left	Center	Right
2NC	01F	(1)	NC	▬	▬	
		(2)	NC		▬	▬
		–	–	–	–	–
		–	–	–	–	–
2NO+2NC	014	(1)	NC	▬	▬	
		(2)	NC		▬	▬
		(3)	NO			●
		(4)	NO	●		
4NC	01J	(1)	NC	▬	▬	
		(2)	NC		▬	▬
		(3)	NC	▬	▬	
		(4)	NC		▬	▬
2NO+2NC	024	(1)	NC	▬	▬	
		(2)	NC		●	
		(3)	NO			●
		(4)	NO	●		●
2NO+2NC	03C* (Maintained only)	(1)	NC	▬	▬	
		(2)	NC			●
		(3)	NO			●
		(4)	NO	●		
2NO+2NC	044*	(1)	NC	▬	▬	
		(2)	NC		●	
		(3)	NO			●
		(4)	NO	●		
2NO+2NC	054	(1)	NC	▬	▬	
		(2)	NC		●	
		(3)	NO			●
		(4)	NO			●

Contact arrangement	Contact arrangement code	Contact operation: Contact block: Mounting position	Contact block: Type	Operator position: Left	Center	Right
2NO+2NC	064	(1)	NC		▬	▬
		(2)	NC		●	
		(3)	NO	●		
		(4)	NO	●		●
1NO+1NC	07F	(1)	NC		▬	▬
		(2)	NO			●
		–	–			
		–	–			
2NO+2NC	07C* (Maintained only)	(1)	NC		▬	▬
		(2)	NC			●
		(3)	NO	●		
		(4)	NO	●		
2NO+2NC	084	(1)	NC		▬	▬
		(2)	NC		●	
		(3)	NO	●		
		(4)	NO	●		
2NO+2NC	094*	(1)	NC		▬	▬
		(2)	NC		●	
		(3)	NO	●		
		(4)	NO			●
2NO+2NC	104	(1)	NC		●	
		(2)	NC		●	
		(3)	NO	●		●
		(4)	NO	●		●
2NO+2NC	11C* (Maintained only)	(1)	NC		●	
		(2)	NC			●
		(3)	NO	●		●
		(4)	NO	●		

Notes: ●: Contact closed Blank: Contact open
* There may be some overlap in the contact when switching between notches.

• Position of contact block

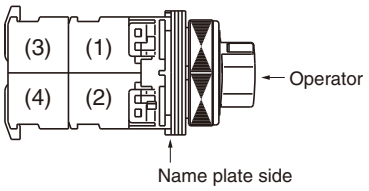

- **Contact arrangement code (Typical example)**

Contact arrangement	Contact arrangement code	Contact operation: Contact block: Mounting position	Contact block: Type	Operator position: Left	Operator position: Center	Operator position: Right
2NO+2NC	124*	(1)	NC		●	
		(2)	NC		●	
		(3)	NO	●		●
		(4)	NO	●		
2NO+2NC	134*	(1)	NC		●	
		(2)	NC		●	
		(3)	NO	●		●
		(4)	NO			●
3NO+1NC	14D* (Maintained only)	(1)	NO	●		
		(2)	NC		●	
		(3)	NO	●		
		(4)	NO			●
3NO+1NC	15A*	(1)	NO			●
		(2)	NC		●	
		(3)	NO			●
		(4)	NO	●		
2NO+2NC	164	(1)	NC		●	
		(2)	NC		●	
		(3)	NO	●		
		(4)	NO	●		
2NO+2NC	174*	(1)	NC		●	
		(2)	NC		●	
		(3)	NO	●		
		(4)	NO			●
2NO+2NC	184	(1)	NC		●	
		(2)	NC		●	
		(3)	NO			●
		(4)	NO			●

Notes: ●: Contact closed Blank: Contact open
* There may be some overlap in the contact when switching between notches.

Contact arrangement	Contact arrangement code	Contact operation: Contact block: Mounting position	Contact block: Type	Operator position: Left	Operator position: Center	Operator position: Right
2NO+2NC	194	(1)	NC		▬	▬
		(2)	NC	▬	▬	
		(3)	NO	●		
		(4)	NO			●
4NO	20B	(1)	NO			●
		(2)	NO	●		
		(3)	NO			●
		(4)	NO	●		

- **Position of contact block**

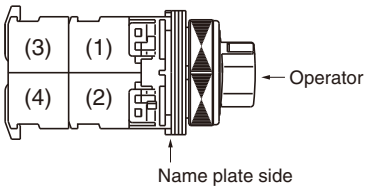

4, 5-position

Operator	Contact (The following contact is only available.)	Operation	Knob color	Contact arrangement	Type Switch with round bezel
Knob AF95-475	2NO+2NC	4-position maintained	Color code: B: Black (Standard) Color other than above are available (G: Green R: Red)	Replace the ■ mark by the contact arrangement code (shown below)	**AR30PCR-4■B**
		5-position maintained			**AR30PCR-5■B**
Lever KK02-140A	2NO+2NC	4-position maintained			**AR30WCR-4■B**
		5-position maintained			**AR30WCR-5■B**

C1

● Contact arrangement code

Position	Contact arrange-ment	Contact arrange-ment code	Contact operation: Contact block: Mounting position	Contact block: Type	Operator position 1 2 3 4 5
4-position	2NO+2NC	41C* (Main-tained only)	(1)	NC	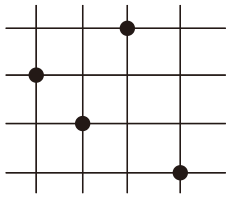
			(2)	NC	
			(3)	NO	
			(4)	NO	
5-position	2NO+2NC	51C* (Main-tained only)	(1)	NC	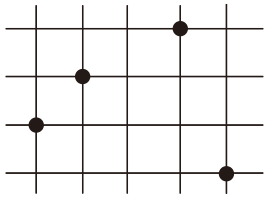
			(2)	NC	
			(3)	NO	
			(4)	NO	

Notes: ●: Contact closed
* There may be some overlap in the contact when switching between notches.

• Position of contact block

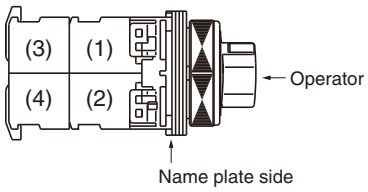

Operator position

4-position **5-position**

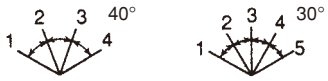

■ Lever type selector switches

2-position

Operator	Operation	Contact	Type	Contact operation	
				Contact arrangement	Operator position Left ↖ Right ↗
Lever (metal type)	Maintained	1NO	**AR30HR-210**	1NO (1)	Upper contact ③ ④
	each 90°	1NC	**AR30HR-201**	1NC (1)	Upper contact ① ②
		1NO+1NC	**AR30HR-211**	1NO (1) 1NC (2)	Upper contact ③ ④ Lower contact ① ②
		2NO	**AR30HR-220**	1NO (1) 1NO (2)	Upper contact ③ ④ Lower contact ③ ④
		2NC	**AR30HR-202**	1NC (1) 1NC (2)	**Upper contact** ① ② **Lower contact** ① ②
		2NO+2NC	**AR30HR-222**	1NO (1) 1NO (3) 1NC (2) 1NC (4)	**Upper contact** ③ ④ ③ ④ **Lower contact** ① ② ① ②

KKD05-115

Notes: • Contact arrangements in the table can be supplied.

● Contact closed

• Position of contact block

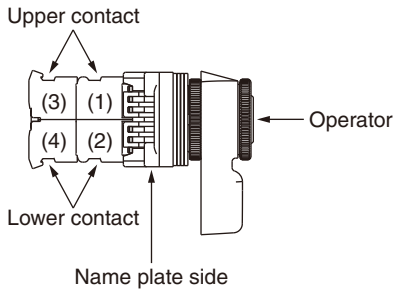

3-position

Operator	Operation	Contact	Type	Contact operation	
				Contact arrangement	Operator position Left ↖ Center ↑ Right ↗
Lever (metal type) KKD05-114	Maintained each 45°	1NO+1NC	**AR30HR-311**	1NO (1) 1NC (2)	Upper contact ③ ④ Lower contact ① ②
		2NO+2NC	**AR30HR-322**	1NO (1) 1NO (3) 1NC (2) 1NC (4)	Upper contact ③ ④ ③ ④ Lower contact ① ② ① ②
	Spring return each 60°	2NO+2NC	**AR30HR-122**	1NC (1) 1NO (3) 1NC (2) 1NO (4)	Upper contact ① ② ③ ④ Lower contact ① ② ③ ④

Notes: • Contact arrangements in the table can be supplied.
• Contact arrangements. The NO contacts at (1) and (2) use special parts. Do not interchange these parts.

● Contact closed

• Position of contact block

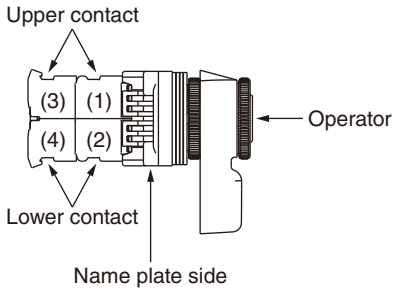

■ Illuminated selector switches

2-position

Operator	Operation	Contact	LED lamp		Incandescent lamp	
			Transformer	Type	Transformer	Type
Knob KKD19-103	Maintained each 90°	1NO 1NC 1NO+1NC 2NO+2NC	Without	**AR30PL-210■3□** **AR30PL-201■3□** **AR30PL-211■3□** **AR30PL-222■3□**	Without	**AR30PL-210■4□** **AR30PL-201■4□** **AR30PL-211■4□** **AR30PL-222■4□**
		1NO 1NC 1NO+1NC 2NO	With	**AR30PL-210■3□** **AR30PL-201■3□** **AR30PL-211■3□** **AR30PL-222■3□**	With	**AR30PL-210■4□** **AR30PL-201■4□** **AR30PL-211■4□** **AR30PL-222■4□**
	Spring return 60°	1NO 1NC 1NO+1NC 2NO	Without	**AR30PL-010■3□** **AR30PL-001■3□** **AR30PL-011■3□** **AR30PL-020■3□**	Without	**AR30PL-010■4□** **AR30PL-001■4□** **AR30PL-011■4□** **AR30PL-020■4□**
		1NO 1NC 1NO+1NC 2NO	With	**AR30PL-010■3□** **AR30PL-001■3□** **AR30PL-011■3□** **AR30PL-020■3□**	With	**AR30PL-010■4□** **AR30PL-001■4□** **AR30PL-011■4□** **AR30PL-020■4□**

3-position

Operator	Operation		Contact	LED lamp		Incandescent lamp	
				Transformer	Type	Transformer	Type
Knob KKD19-103	Maintained each 45°		1NO+1NC 2NO+2NC	Without	**AR30PL-311■3□** **AR30PL-322■3□**	Without	**AR30PL-311■4□** **AR30PL-322■4□**
			1NO+1NC	With	**AR30PL-311■3□**	With	**AR30PL-311■4□**
	Spring/ manual return each 45°		1NO+1NC 1NO+1NC	Without With	**AR30PL-611■3□** **AR30PL-611■3□**	Without With	**AR30PL-611■4□** **AR30PL-611■4□**
			1NO+1NC 1NO+1NC	Without With	**AR30PL-711■3□** **AR30PL-711■3□**	Without With	**AR30PL-711■4□** **AR30PL-711■4□**

Note: □, ■ *See page C1-90*

• Replace the ■ mark by the following lamp voltage code

Transformer	Voltage	Code LED	Incandescent
Without	5V AC/DC	–	5
	6V DC	6	–
	6V AC	A	–
	12V AC/DC	B	–
	15V AC/DC	C	C
	20V AC/DC	–	D
	24V AC/DC	E	E
With	100-110V AC	H	H
	115-127V AC	L	L
	200-220V AC	M	M
	230-254V AC	Q	Q
	350-380V AC	S	S
	400-440V AC	T	T
	480V AC	V	V
	500-550V AC	W	W

• Replace the □ mark by the following knob color code

Color	Green	Red	White	Blue	Yellow	Orange
Code	G	R	W	S	Y	A

• Up to 4-contact of contact arrangement can be made.
Available numbers of contacts are as follow.

No. of position	Operation	Without transformer	With transformer
2-position	Maintained	6-contact	4-contact
	Spring return	3-contact	2-contact
3-position	Maintained	6-contact	4-contact
	Spring/manual return	3-contact	2-contact

C1

● Contact arrangement and operator position

2-position

Transformer	Contact arrangement	Contact block		Operator position	
		Mounting position	Type	Left	Right
With/without	1NO	(1)	NO	–	●
With/without	1NC	(1)	NC	●	–
Without	1NO+1NC	(1)	NO	–	●
		(2)	NC	●	–
With	1NO+1NC	(1)	NC	●	–
		(2)	NO	–	●
With/without	2NO	(1)	NO	–	●
		(2)	NO	–	●
Without	2NO+2NC	(1)	NO	–	●
	*1	(2)	NC	●	–
		(3)	NO	–	●
		(4)	NC	●	–
With	2NO+2NC	(1)	NC	●	–
	*1	(2)	NC	●	–
		(3)	NO	–	●
		(4)	NO	–	●

Notes: *1 : AR30PL-2
● : Contact closed, – : Contact open

3-position

Transformer	Contact arrangement	Contact block		Operator position		
		Mounting position	Type	Left	Center	Right
Without	1NO+1NC	(1)	NO	●	–	–
	*1	(2)	NC	–	–	●
	1NO+1NC	(1)	NO	–	–	●
	*2	(2)	NC	●	–	–
	2NO+2NC	(1)	NO	●	–	–
	*3	(2)	NC	–	–	●
		(3)	NO	●	–	–
		(4)	NC	–	–	●
With	1NO+1NC	(1)	NC	–	–	●
	*1	(2)	NO	●	–	–
	1NO+1NC	(1)	NC	●	–	–
	*2	(2)	NO	–	–	●
	2NO+2NC	(1)	NC	–	–	●
	*3	(2)	NC	–	–	●
		(3)	NO	●	–	–
		(4)	NO	●	–	–

Notes: *1 : AR30PL-3, 6 *3 : AR30PL-3
*2 : AR30PL-7
● : Contact closed, – : Contact open

● Position of contact block

Without transformer

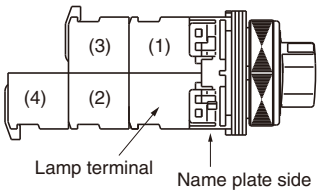

With transformer

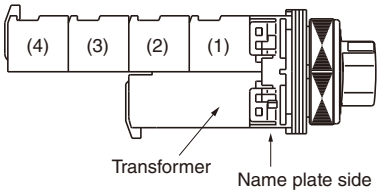

■ Pilot lights/standard

Lens	Transformer	LED lamp Lamp voltage	Type	Incandescent lamp Lamp voltage	Type
Dome KKD05-184	Without	6V AC	**DR30D0L-A3□**	5.5V AC/DC	**DR30D0L-54□**
		6V DC	**DR30D0L-63□**	—	**—**
		12V AC/DC	**DR30D0L-B3□**	15V AC/DC	**DR30D0L-C4□**
		24V AC/DC	**DR30D0L-E3□**	24V AC/DC	**DR30D0L-E4□**
	With	100–110V AC	**DR30D0L-H3□**	100–110V AC	**DR30D0L-H4□**
		200–220V AC	**DR30D0L-M3□**	200–220V AC	**DR30D0L-M4□**
Dome 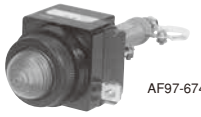 AF97-674	With resistor	50V DC	**DR30D0L-FR□**	50V DC	**DR30D0L-FQ□**
		110V DC	**DR30D0L-HR□**	—	**—**
		220V DC	**DR30D0L-MR□**	—	**—**
Extended round KKD05-179	Without	6V AC	**DR30E3L-A3□**	5.5V AC/DC	**DR30E3L-54□**
		6V DC	**DR30E3L-63□**	—	**—**
		12V AC/DC	**DR30E3L-B3□**	15V AC/DC	**DR30E3L-C4□**
		24V AC/DC	**DR30E3L-E3□**	24V AC/DC	**DR30E3L-E4□**
	With	100–110V AC	**DR30E3L-H3□**	100–110V AC	**DR30E3L-H4□**
		200–220V AC	**DR30E3L-M3□**	200–220V AC	**DR30E3L-M4□**
Faceted KKD19-101	Without	6V AC	**DR30K0L-A3□**	5.5V AC/DC	**DR30K0L-54□**
		6V DC	**DR30K0L-63□**	—	**—**
		12V AC/DC	**DR30K0L-B3□**	15V AC/DC	**DR30K0L-C4□**
		24V AC/DC	**DR30K0L-E3□**	24V AC/DC	**DR30K0L-E4□**
	With	100–110V AC	**DR30K0L-H3□**	100–110V AC	**DR30K0L-H4□**
		200–220V AC	**DR30K0L-M3□**	200–220V AC	**DR30K0L-M4□**
Faceted 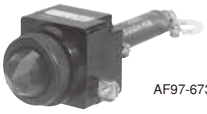 AF97-673	With resistor	50V DC	**DR30K0L-FR□**	50V DC	**DR30K0L-FQ□**
		110V DC	**DR30K0L-HR□**	—	**—**
		220V DC	**DR30K0L-MR□**	—	**—**
Dome with dimmer control KKD19-131	Without	6V AC	**DR30D1L-A3□**	5.5V AC/DC	**DR30D1L-54□**
		6V DC	**DR30D1L-63□**	—	**—**
		12V AC/DC	**DR30D1L-B3□**	—	**—**
		15V AC/DC	**DR30D1L-C3□**	15V AC/DC	**DR30D1L-C4□**
		24V AC/DC	**DR30D1L-E3□**	24V AC/DC	**DR30D1L-E4□**
	With	100V–110V AC	**DR30D1L-H3□**	100V–110V AC	**DR30D1L-H4□**
		200V–220V AC	**DR30D1L-M3□**	200V–220V AC	**DR30D1L-M4□**

Note: □ *See page C1-92*

■ Pilot lights/short-body with transformer

Lens	LED lamp Lamp voltage	Type	Incandescent lamp Lamp voltage	Type
Dome KK02-141A	100–110V AC 200–220V AC	**DR30D0L-H9□** **DR30D0L-M9□**	100–110V AC 200–220V AC	**DR30D0L-H8□** **DR30D0L-M8□**
Extended round KK02-142A	100–110V AC 200–220V AC	**DR30E3L-H9□** **DR30E3L-M9□**	100–110V AC 200–220V AC	**DR30E3L-H8□** **DR30E3L-M8□**
Faceted KK02-143A	100–110V AC 200–220V AC	**DR30K0L-H9□** **DR30K0L-M9□**	100–110V AC 200–220V AC	**DR30K0L-H8□** **DR30K0L-M8□**

C1

- **Lens color**

Replace the □ mark by the following lens color code

Color	Green	Red	White	Blue	Yellow	Orange
Code	G	R	W	S	Y	A

- **Lamp voltage**

Available lamp voltage are as follow.

Description	Voltage	Code Standard type LED	 Incandescent	Code Short-body type LED	 Incandescent
Without transformer	5.5V AC/DC	–	54	–	–
	6V AC	A3	–	–	–
	6V DC	63	–	–	–
	12V AC/DC	B3	–	–	–
	15V AC/DC	C3	C4	–	–
	20V AC/DC	–	D4	–	–
	24V AC/DC	E3	E4	–	–
With transformer	100-110V AC	H3	H4	H9	H8
	115-127V AC	L3	L4	L9	L8
	200-220V AC	M3	M4	M9	M8
	230-254V AC	Q3	Q4	–	–
	350-380V AC	S3	S4	–	–
	400-440V AC	T3	T4	–	–
	480V AC	V3	V4	–	–
	500-550V AC	W3	W4	–	–
With resistor unit	110V DC	H7	–	–	–
With resistor	50V DC	FR	FQ	–	–
	110V DC	HR	HQ	–	–
	220V DC	MR	MQ	–	–

■ Pilot lights/standard

Lens	Transformer	LED unit Lamp voltage	LED unit Type	Incandescent lamp Lamp voltage	Incandescent lamp Type
Flush square (34mm sq. transparent lens) KKD10-143	Without	6V DC 15V AC/DC 24V AC/DC	**DR30F4M-65□** **DR30F4M-C5□** **DR30F4M-E5□**	5.5V AC/DC 15V AC/DC 24V AC/DC	**DR30F4M-54□** **DR30F4M-C4□** **DR30F4M-E4□**
	With	100–110V AC 200–220V AC	**DR30F4M-H5□** **DR30F4M-M5□**	100–110V AC 200–220V AC	**DR30F4M-H4□** **DR30F4M-M4□**
Flush rectangular (Transparent lens) KKD10-144	Without	6V DC 15V AC/DC 24V AC/DC	**DR30F4N-65□** **DR30F4N-C5□** **DR30F4N-E5□**	5.5V AC/DC 15V AC/DC 24V AC/DC	**DR30F4N-54□** **DR30F4N-C4□** **DR30F4N-E4□**
	With	100–110V AC 200–220V AC	**DR30F4N-H5□** **DR30F4N-M5□**	100–110V AC 200–220V AC	**DR30F4N-H4□** **DR30F4N-M4□**
Flush square (40mm sq. transparent lens) KKD10-145	Without	6V DC 15V AC/DC 24V AC/DC	**DR30M4M-65□** **DR30M4M-C5□** **DR30M4M-E5□**	5.5V AC/DC 15V AC/DC 24V AC/DC	**DR30M4M-54□** **DR30M4M-C4□** **DR30M4M-E4□**
	With	100–110V AC 200–220V AC	**DR30M4M-H5□** **DR30M4M-M5□**	100–110V AC 200–220V AC	**DR30M4M-H4□** **DR30M4M-M4□**

• Color plate

Replace the □ mark by the following color plate color code

Color	Green	Red	White	Blue*	Yellow	Orange
Code	G	R	W	S	Y	A

Note: * Incandescent lamp only

• Lamp voltage

Available lamp voltage are as follow.

Description	Voltage	Code Standard type LED	Code Standard type Incandescent
Without transformer	5.5V AC/DC	–	54
	6V AC	A5	–
	6V DC	65	–
	12V AC	25	–
	12V AC/DC	B5	–
	15V AC/DC	C5	C4
	20V AC/DC	–	D4
	24V AC/DC	E5	E4
With transformer	100-110V AC	H5	H4
	115-127V AC	L5	L4
	200-220V AC	M5	M4
	230-254V AC	Q5	Q4
	350-380V AC	S5	S4
	400-440V AC	T5	T4
	480V AC	V5	V4
	500-550V AC	W5	W4
With resistor unit	110V DC	HE	–

Joy stick selector switches

Handle	Terminal	Operating directions	Contact arrangement	Type: Manual return	Type: Spring return
Ball type without lock KKD18-415	Screw	↑↓	1NO × 2	**AR30A0N-A0A0B**	**AR30A5N-A0A0B**
			1NO + 1NC × 2	**AR30A0N-1010B**	**AR30A5N-1010B**
		↑↓←→	1NO × 4	**AR30A0N-AAAAB**	**AR30A5N-AAAAB**
			1NO + 1NC × 4	**AR30A0N-1111B**	**AR30A5N-1111B**
	Solder/tab	↑↓	1NO + 1NC × 2	**AR30A0H-1010B**	**AR30A5H-1010B**
			2NO + 2NC × 2	**AR30A0H-2020B**	**AR30A5H-2020B**
		↑↓←→	1NO + 1NC × 4	**AR30A0H-1111B**	**AR30A5H-1111B**
			2NO + 2NC × 4	**AR30A0H-2222B**	**AR30A5H-2222B**
Ball type with lock KKD18-416	Screw	↑↓	1NO × 2	**AR30A1N-A0A0B**	**AR30A6N-A0A0B**
			1NO + 1NC × 2	**AR30A1N-1010B**	**AR30A6N-1010B**
		↑↓←→	1NO × 4	**AR30A1N-AAAAB**	**AR30A6N-AAAAB**
			1NO + 1NC × 4	**AR30A1N-1111B**	**AR30A6N-1111B**
	Solder/tab	↑↓	1NO + 1NC × 2	**AR30A1H-1010B**	**AR30A6H-1010B**
			2NO + 2NC × 2	**AR30A1H-2020B**	**AR30A6H-2020B**
		↑↓←→	1NO + 1NC × 4	**AR30A1H-1111B**	**AR30A6H-1111B**
			2NO + 2NC × 4	**AR30A1H-2222B**	**AR30A6H-2222B**
Rubber cap type without lock KKD18-417	Screw	↑↓	1NO × 2	**AR30A2N-A0A0B**	**AR30A7N-A0A0B**
			1NO + 1NC × 2	**AR30A2N-1010B**	**AR30A7N-1010B**
		↑↓←→	1NO × 4	**AR30A2N-AAAAB**	**AR30A7N-AAAAB**
			1NO + 1NC × 4	**AR30A2N-1111B**	**AR30A7N-1111B**
	Solder/tab	↑↓	1NO + 1NC × 2	**AR30A2H-1010B**	**AR30A7H-1010B**
			2NO + 2NC × 2	**AR30A2H-2020B**	**AR30A7H-2020B**
		↑↓←→	1NO + 1NC × 4	**AR30A2H-1111B**	**AR30A7H-1111B**
			2NO + 2NC × 4	**AR30A2H-2222B**	**AR30A7H-2222B**

- **Operating direction**
- Directions other than those shown in the table above can be provided.
- For types AR30A□N-□②③④ B, designate the contact arrangement codes for the necessary operating directions (①: Upper,②: Right, ③: Lower,④: Left). Designate "0" for unnecessary directions.

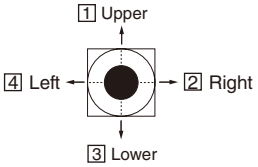

- **Contact arrangement**

Contact arrangement		–	1NO	1NC	1NO+1NC	2NO	2NC	2NO+2NC
Manual return Spring return	Screw	0	A	B	1	D	E	–
	Solder/Tab	0	–	–	1	–	–	2

- Spring/manual return are also available, contact FUJI .

■ Buzzers

Sound	Description	Transformer	Operating voltage	Type
Electronic sound	• LED operation indicator (Red) • Intermittent/continuous sound selection • Sound level: 90dB (0.1m) 70dB (1m)	Without	6V DC 12 to 24V AC/DC	**DR30B5-6B** **DR30B5-EB**
		With	100 to 110V AC 200 to 220V AC	**DR30B5-HB** **DR30B5-MB**
Electronic sound (economy) 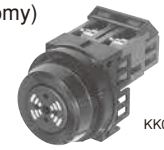 KK02-145A	• Sound level: 90dB (0.1m) 70dB (1m)	Without	6V DC 24V AC 24V DC	**DR30B6-6B** **DR30B6-GB** **DR30B6-EB**
		With	100 to 110V AC 200 to 220V AC	**DR30B6-HB** **DR30B6-MB**
Electronic sound (IP54) KKD19-115	• Intermittent/continuous sound selection • Sound level: 80dB (0.1m) 60dB (1m)	Without	6V DC 12 to 24V AC/DC	**DR30B8-6B** **DR30B8-EB**
		With	100 to 110V AC 200 to 220V AC	**DR30B8-HB** **DR30B8-MB**

Notes: • Intermittent/continuous sound selection (DR30B5, B8)
See the "Short-circuit terminal" in the dimensions diagram on the *C1-106*.
page, and select as follows:
• Short-circuit terminal mounted → Intermittent sound
• Short-circuit terminal not mounted → Continuous sound

AR30 and DR30 Dimensions

■ Dimensions, mm

● Illuminated pushbuttons

Extended

With transformer

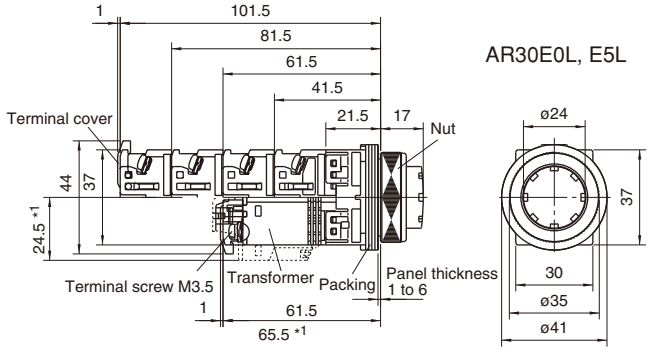

Without transformer

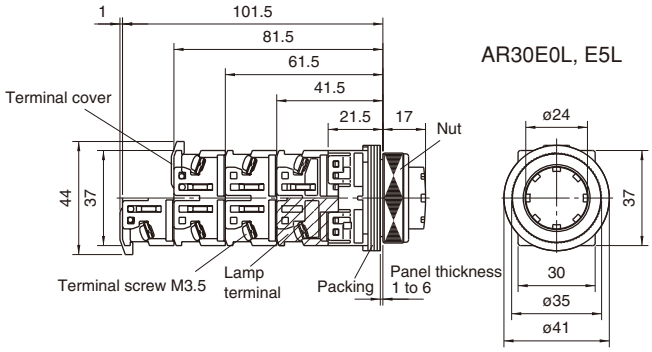

Extended with transparent full guard (24mm dia.)

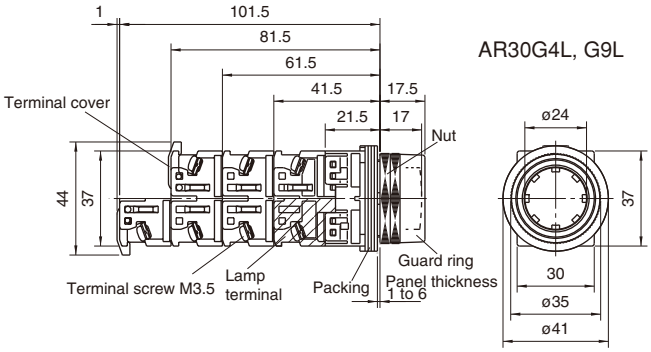

Extended with full guard (24mm dia. with openings)

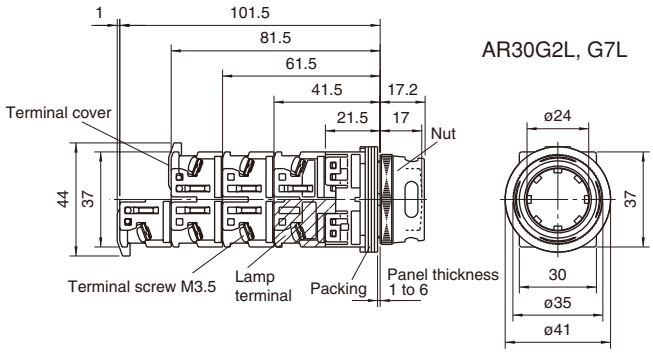

Extended with full guard (24mm dia.)

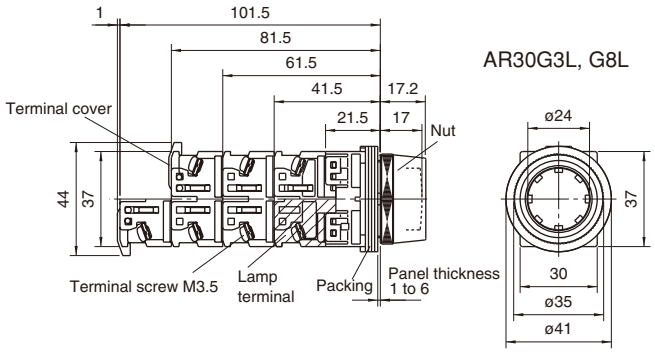

Note: *1 Except for the types 110V AC, 127V AC and 220V AC.

■ Dimensions, mm

● Illuminated pushbuttons

Push-lock, turn-reset (40mm dia. with white arrow)

With transformer

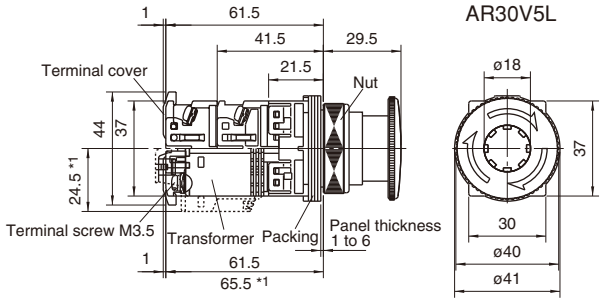

Without transformer

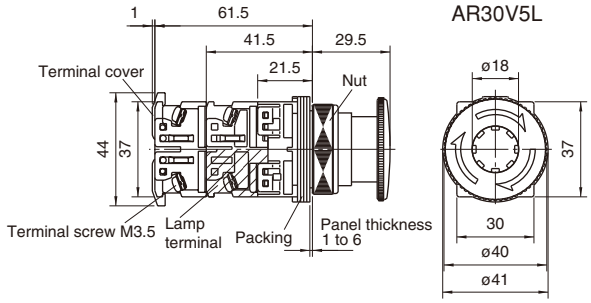

With transformer

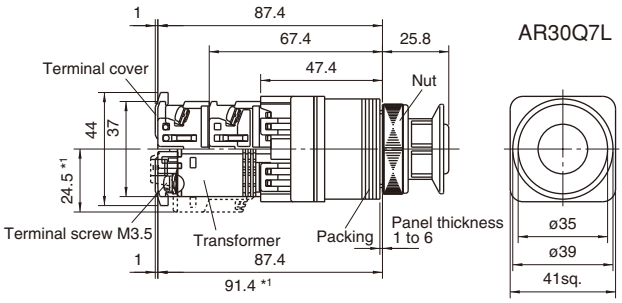

Without transformer

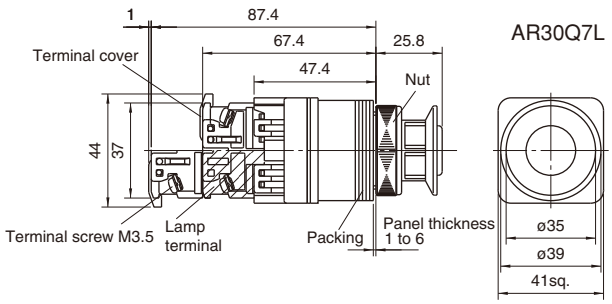

Note: *1 Except for the types 110V AC, 127V AC and 220V AC.

AR30 and DR30 Dimensions

■ Dimensions, mm

● Pushbuttons

Flush/Extended

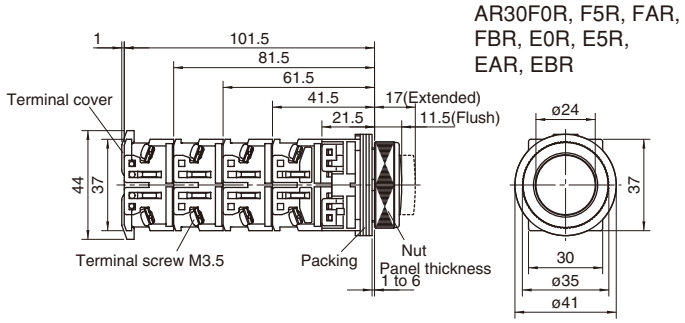

Mushroom (40mm dia.)

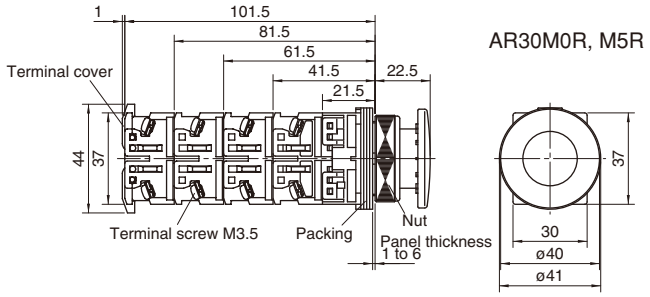

Mushroom (29mm dia.)

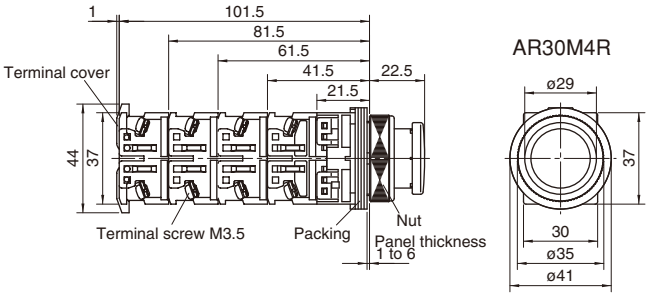

Extended with full guard (24mm dia.)

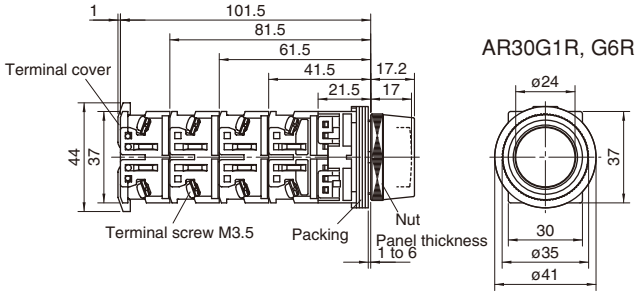

Extended with half guard

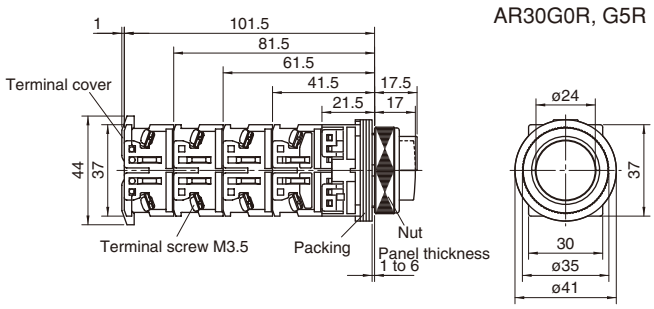

Pin lock

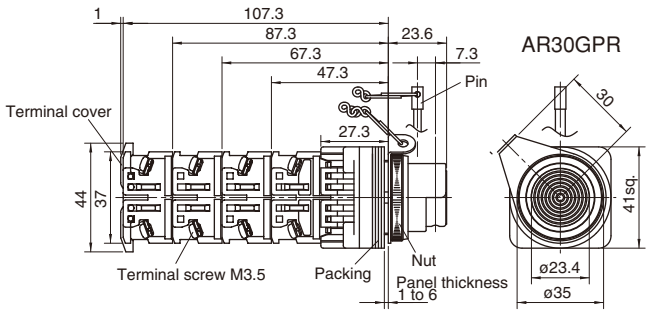

Note:
The enclosed pin can be inserted to lock the pushbutton in a pushed or not pushed state.

Mushroom with full guard (40mm dia.)

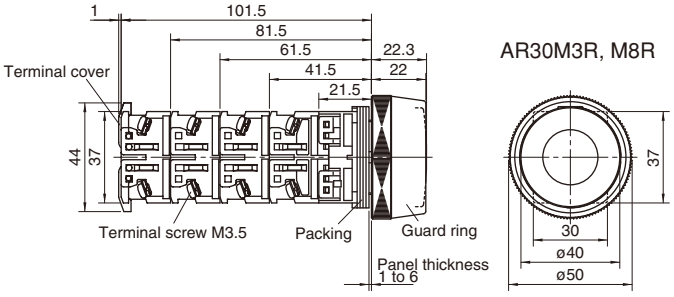

Mushroom with full guard (35mm dia. metal nut)

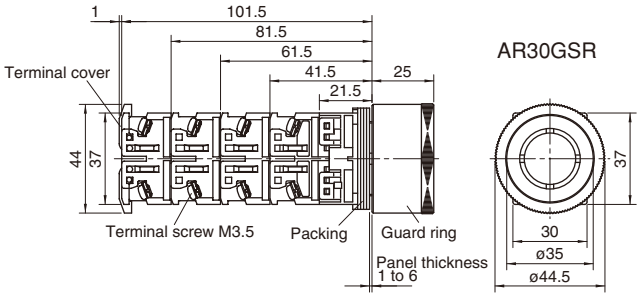

■ Dimensions, mm

● Pushbuttons

Giant

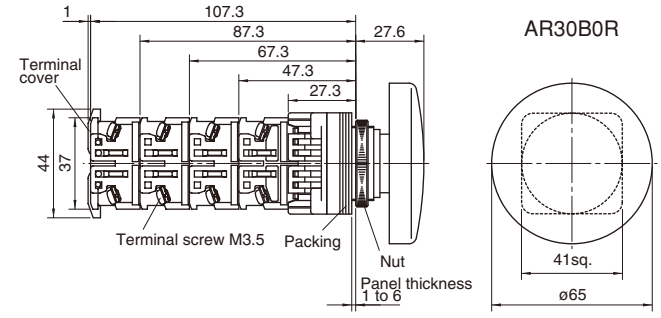

Giant with guard

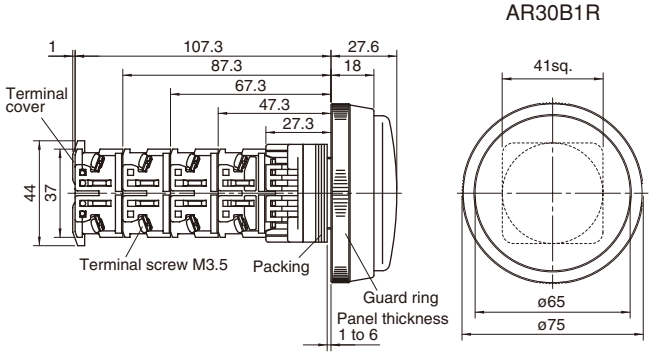

Giant with full guard

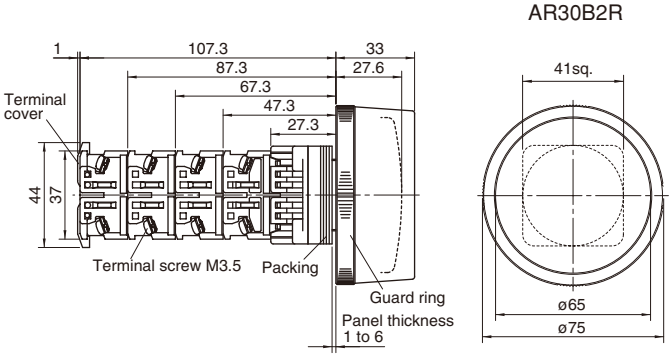

Giant with full guard

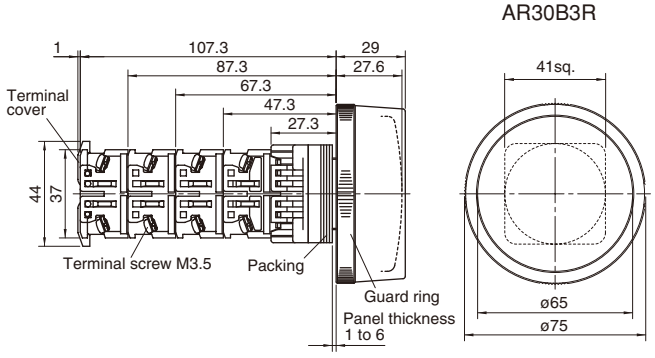

Pushbutton with selector ring (2-position)

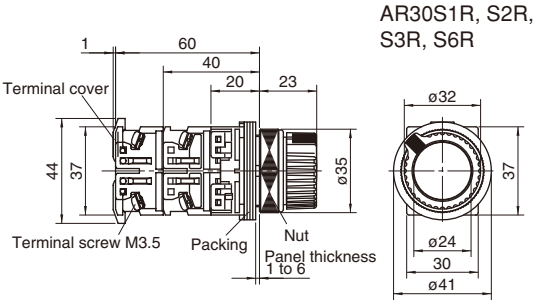

Push, turn-lock

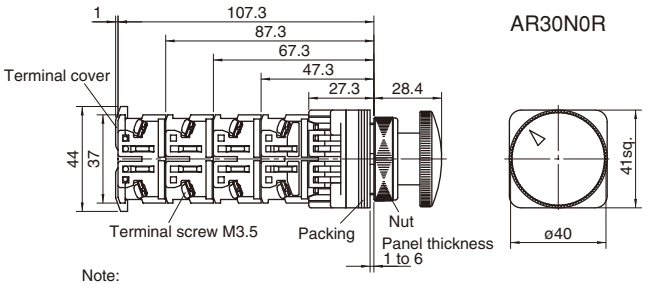

Note:
When the push button is pressed in the left position, it resets automatically (momentary operation).
When pressed and turned to the right it locks, and to the left it resets.

Push-lock, turn-reset (40mm dia. with white arrow)

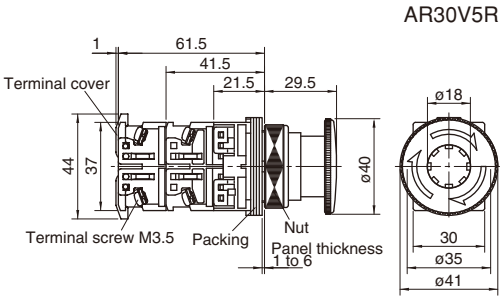

Emergency operating cap

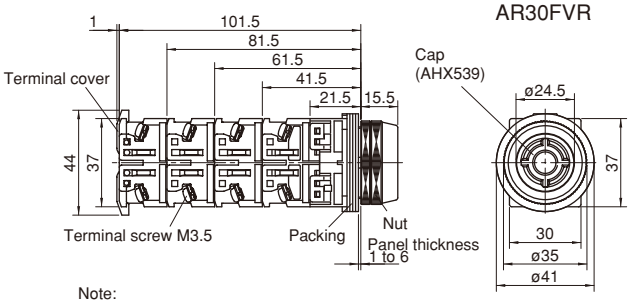

Note:
This is pushbutton switch is operated while holding the cap with the fingertips.
The cap (AHX539) can be exchanged.

AR30 and DR30 Dimensions

■ Dimensions, mm

● Emergency stop pushbuttons

Push-lock, turn-reset (40mm dia.)

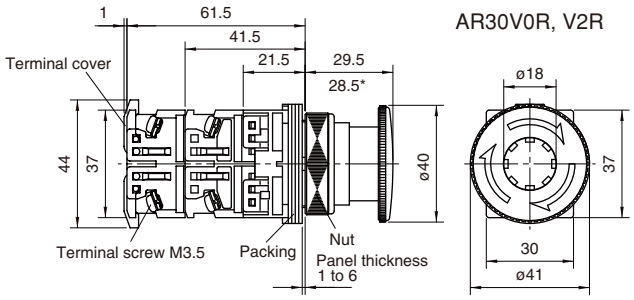

Note: * AR30V2R type

Push-lock, turn-reset (65mm dia. with white allow)

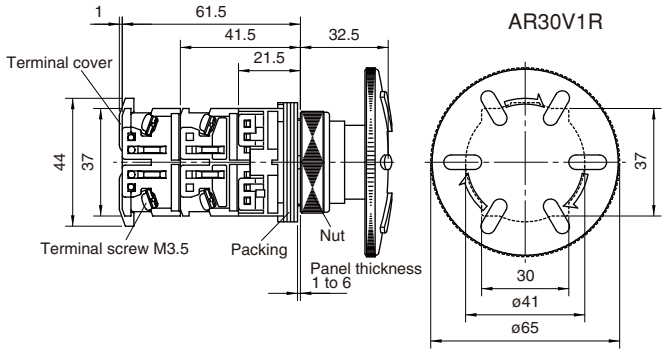

Push-lock, pull-reset (35mm dia.)

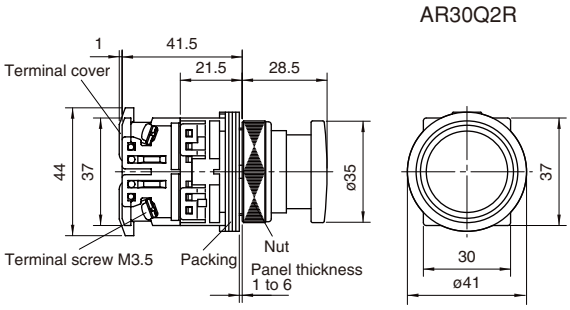

Push-lock, turn-reset (44mm dia.)

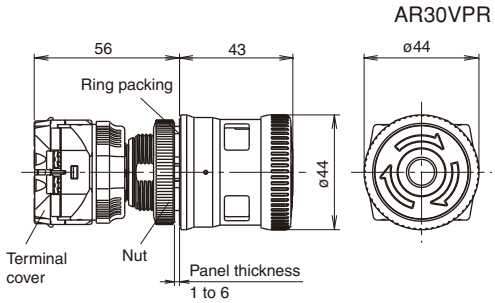

● Emergency stop illuminated pushbuttons

Push-lock, turn-reset (40mm dia.)

With transformer

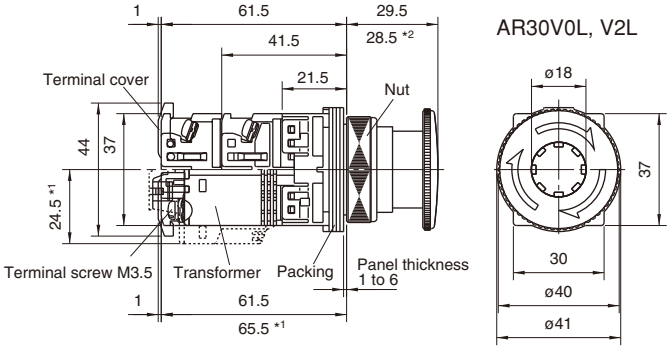

Without transformer

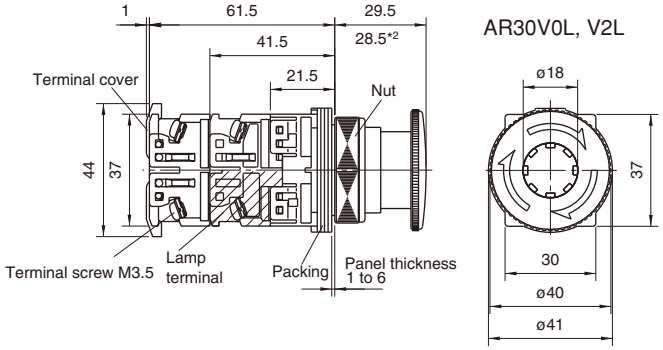

Notes: *1 Except for the types 110V AC, 127V AC and 220V AC.
*2 AR30V2L type

Push-lock, turn-reset (44mm dia.)

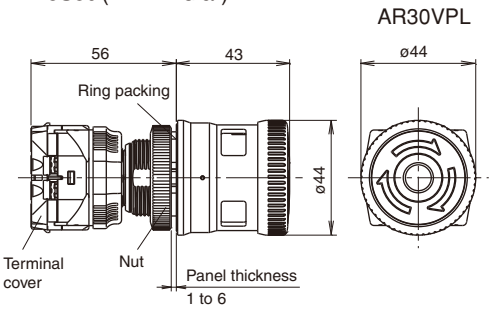

■ Dimensions, mm

● Selector switches

Knob

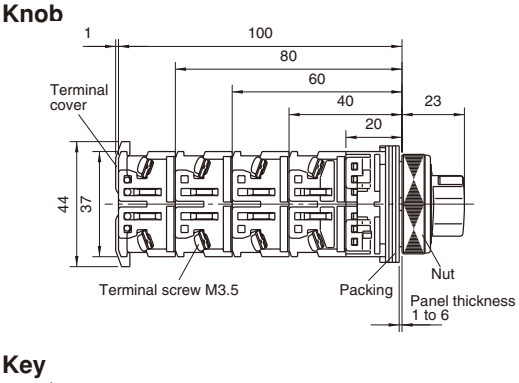

AR30PR, PCR

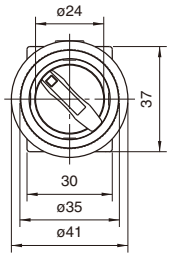

Lever

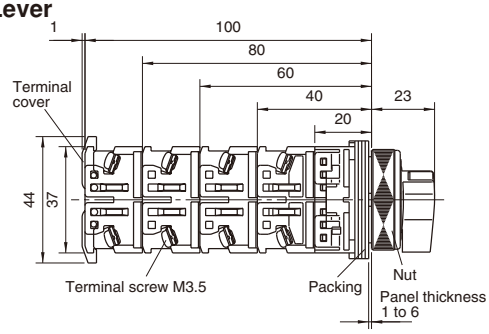

AR30WR, WCR

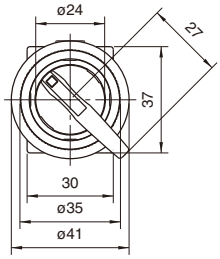

Key

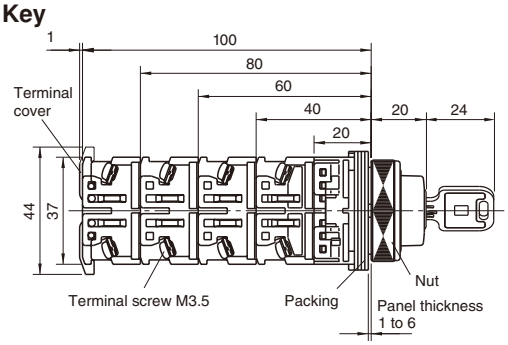

AR30JR, JCR, JAR

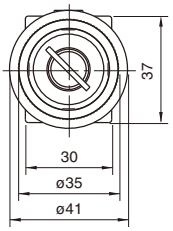

● Lever type selector switches

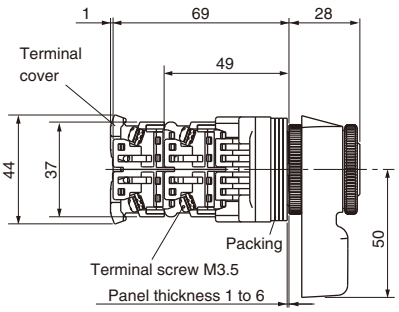

AR30HR-2

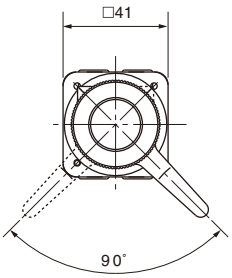

AR30HR-3

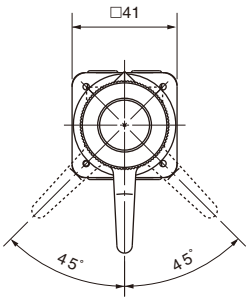

AR30HR-1

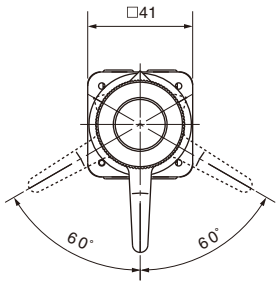

● Illuminated selector switches

Knob

With transformer

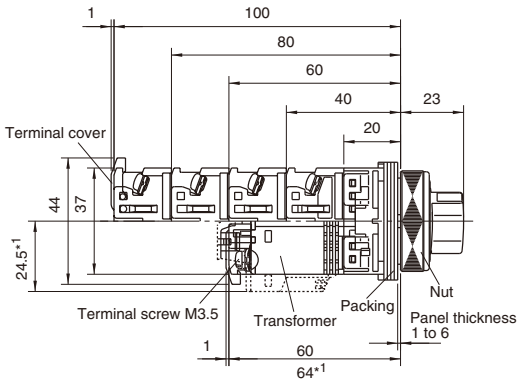

AR30PL

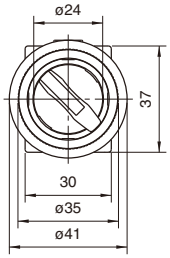

Without transformer

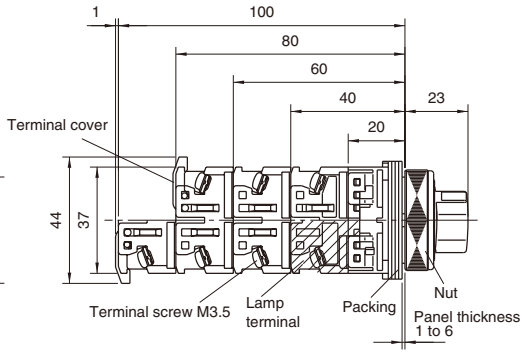

AR30PL

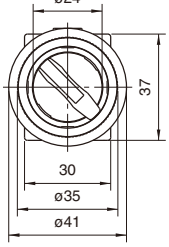

Notes: *1 Except for the types 110V AC, 127V AC and 220V AC.

AR30 and DR30 Dimensions

■ Dimensions, mm

● Pilot lights

Dome

With transformer, with resistor unit

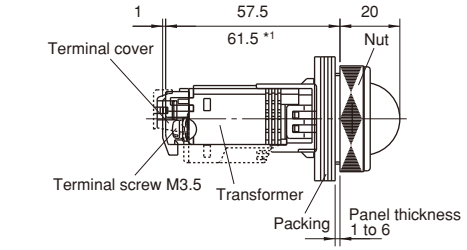

Without transformer

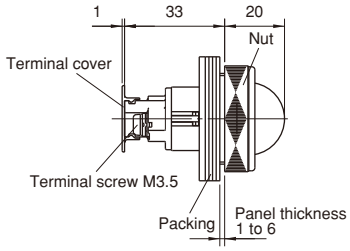

DR30D0L

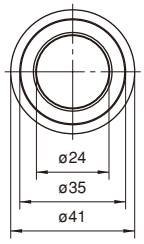

With resistor LED, incandecent (50V DC)

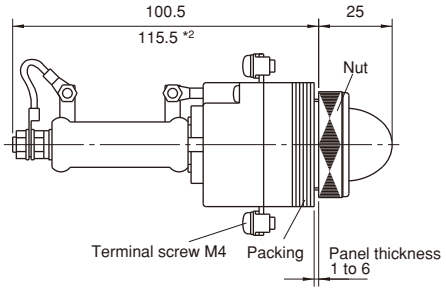

DR30D0L

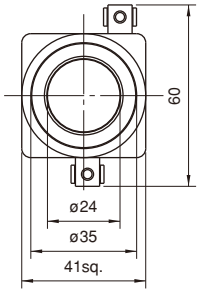

Short-body / with transformer

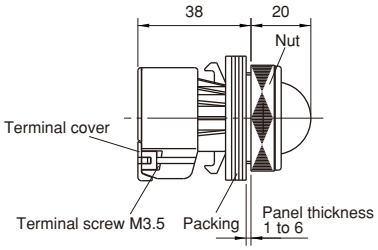

DR30D0L

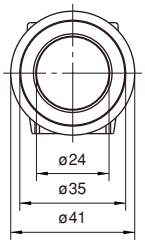

Extended

With transformer, with resistor unit

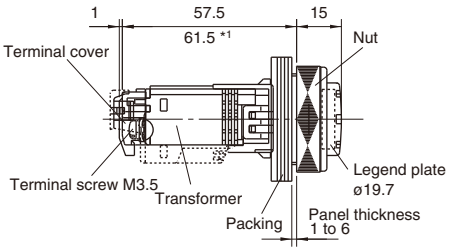

Without transformer

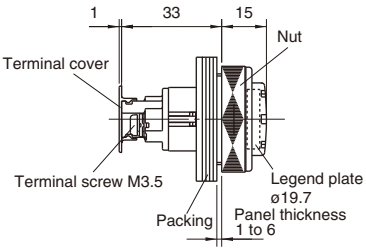

DR30E3L

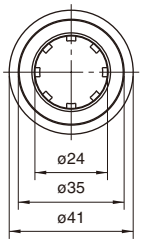

Short-body / with transformer

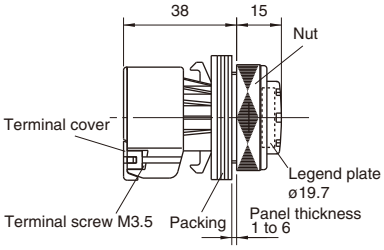

DR30E3L

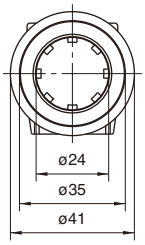

Notes: *1 Except for the types 110V AC, 127V AC and 220V AC.
*2 Incandecent (50V DC) type only

■ Dimensions, mm

● Pilot lights

Faceted

With transformer, with resistor unit

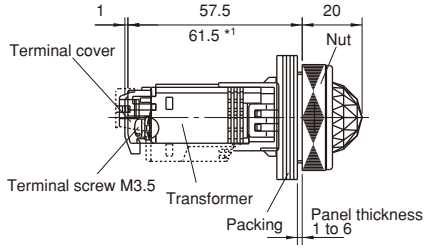

Without transformer

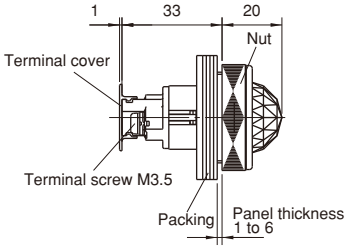

DR30K0L

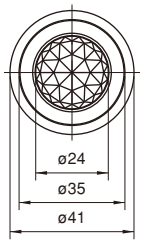

With resistor LED, incandescent (50V DC)

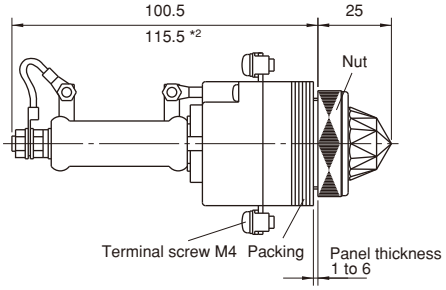

DR30K0L

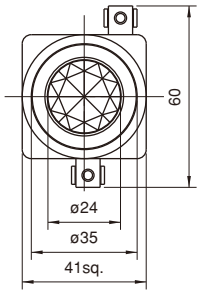

Short-body / with transformer

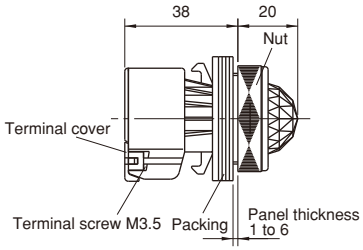

DR30K0L

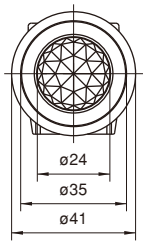

Dome with dimmer control

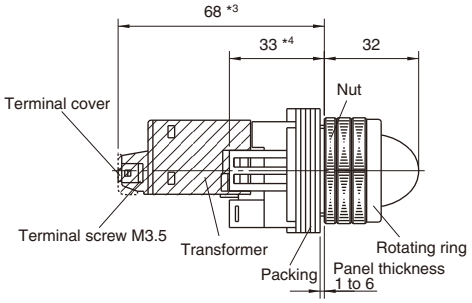

DR30D1L

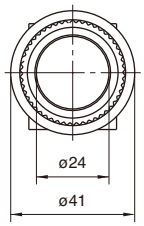

Notes: *1 Except for the types 110V AC, 127V AC and 220V AC.
*2 Incandecent (50V DC) type only
*3 With transformer, with resistor unit type only
*4 For without transformer types, add 1 mm when mounting the terminal cover.

AR30 and DR30 Dimensions

■ Dimensions, mm

● Pilot lights

Flush square (34mm sq. transparent lens)

With transformer, with resistor unit

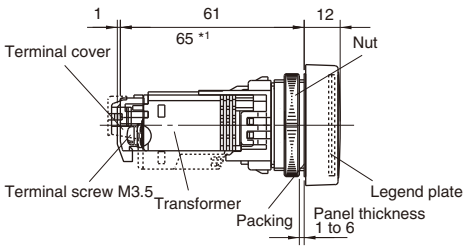

Without transformer

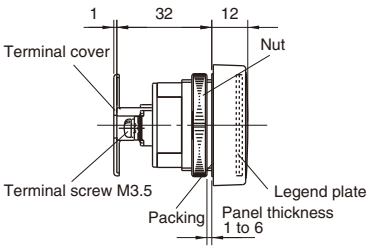

DR30F4M

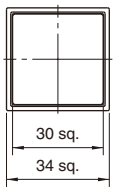

(Transparent lens)

With transformer, with resistor unit

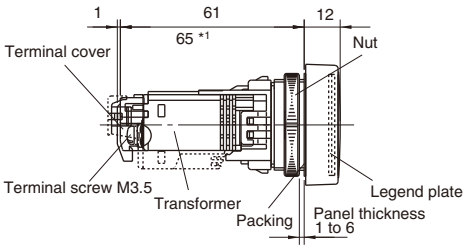

Without transformer

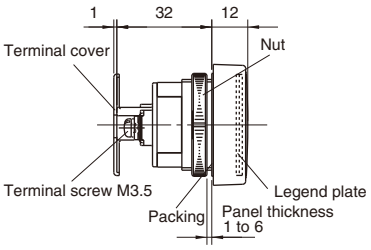

DR30F4N

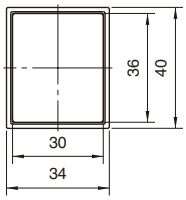

Flush square (40mm sq. transparent lens)

With transformer, with resistor unit

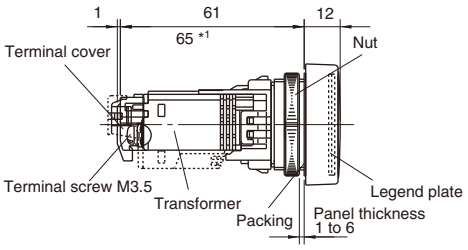

Without transformer

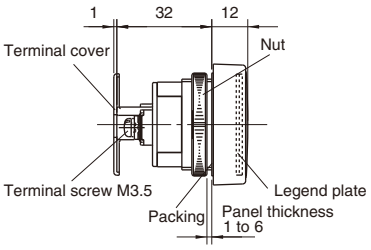

DR30M4M

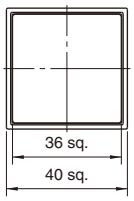

Note: *1 Except for the types 110V AC, 127V AC and 220V AC.

■ Dimensions, mm

● Joy stick selector switches

Ball type (without lock)
AR30A0N, A5N: Screw terminal

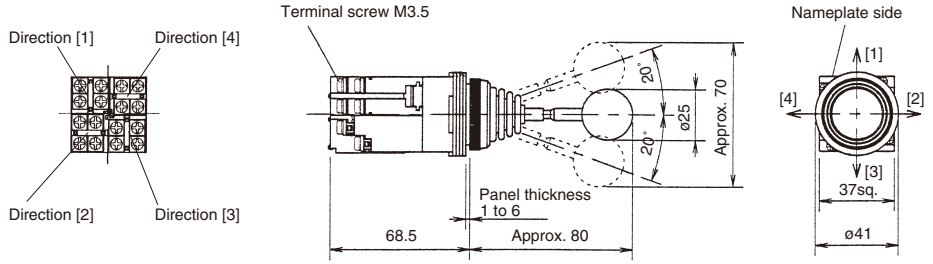

Ball type with lock
AR30A1N, A6N: Screw terminal

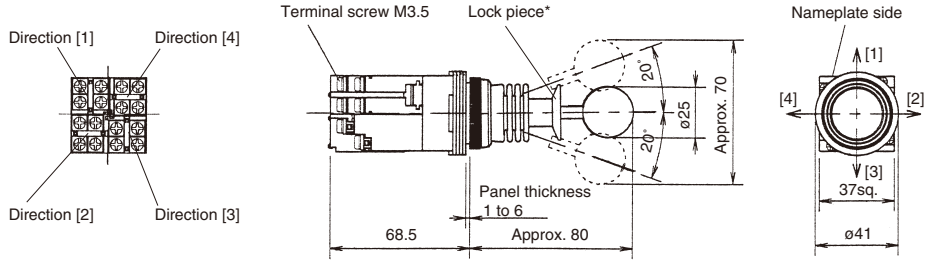

Notes * The contact arrangement is operable in the designated direction by pulling the lock piece in the central position with the fingers. The lock piece will return automatically and locks when the lock piece is released in the central position.
The lock piece locks in the central position only.

Rubber cap type (without lock)
AR30A2N, A7N: Screw terminal

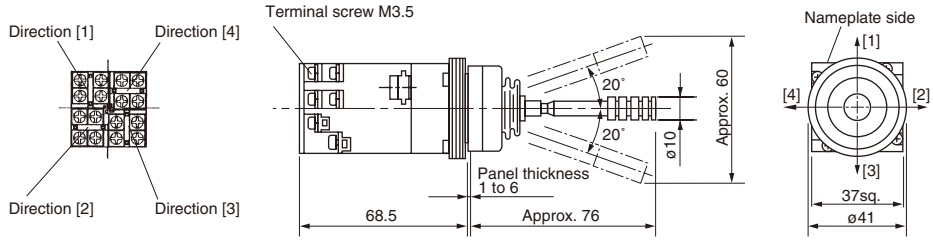

Solder/tab terminal: **AR30A□H**

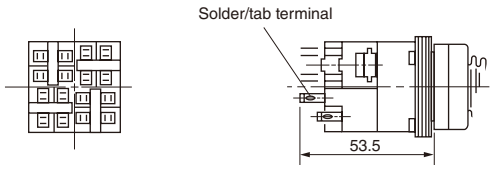

AR30 and DR30 Dimensions

■ Dimensions, mm

● Buzzers

Electronic sound

With transformer

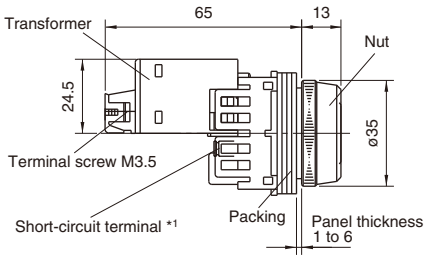

DR30B5, B6

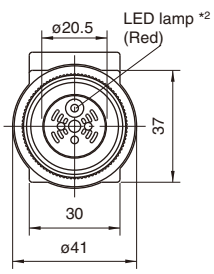

Without transformer

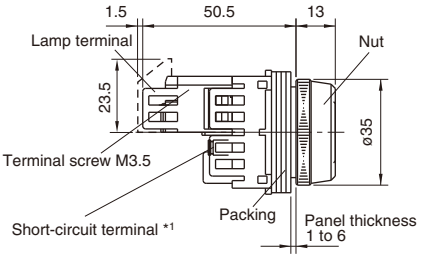

DR30B5, B6

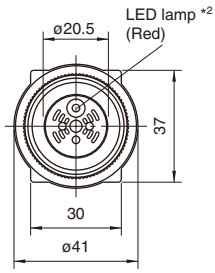

Electronic sound (IP54)

With transformer

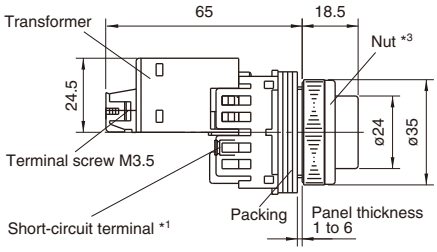

DR30B8

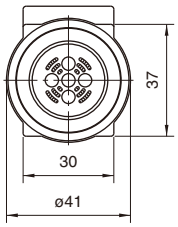

Without transformer

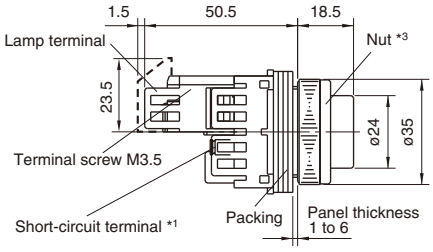

DR30B8

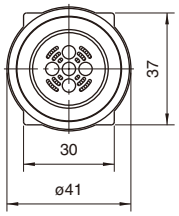

Notes: *1 There are no short-circuit terminals with DR30B6. (Continuous sound only)
*2 There are no LED lamps with DR30B6.
*3 The nut and cap are united with DR30B8.

Notes on use

■ Panel cutout hole

Fig. 1 Panel cutout hole dimensions, mm

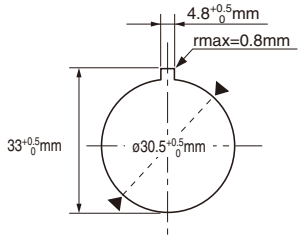

Note : If key-washer or legend plate are not used, 4.8mm-wide. location holes shown in Fig. 1 need not be cutout.

■ Mounting operator to panel

1. Pushbutton with a round bezel (ordinary mounting)

Insert the operator into the cutout hole from the back of the panel, and tighten the nut with the AHX001 wrench from the front of the panel to secure the operator as shown in Fig.2.

Fig. 2 Pushbutton with a round bezel

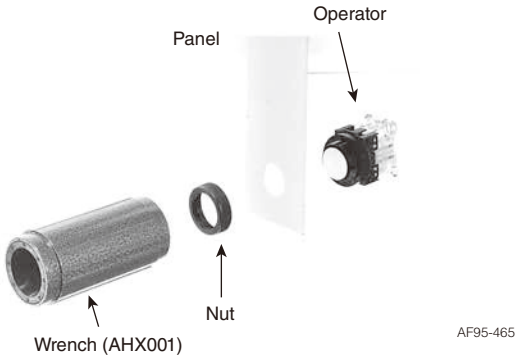

Note : Recommended tightening torque is from 1.5 to 2N·m.

2. AR30V0R, V0L, V2R, V2L, V5R, V5L

(1) The button is removed after loosening the center button by inserting the end of the AR9A002 tightening wrench or the AR9A005 wrench (enclosed with pushbutton) into the holes in the center button and turning counterclockwise, as shown in Fig.3.
(2) Attach the operator in the same manner as described in step 1.

Fig. 3

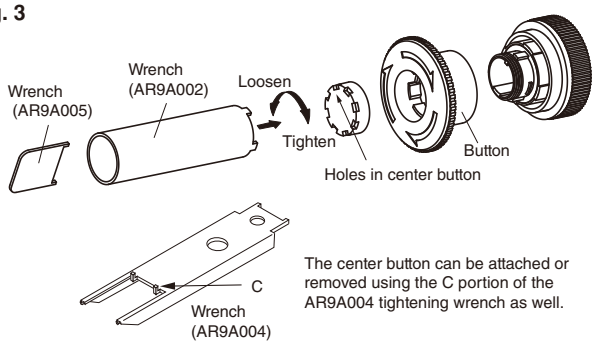

Insert the operator into the cutout hole from the back of the panel, and as shown in Fig.4, insert the pushbutton into the operator cylinder while aligning the grooves inside the pushbutton with the protrusions on the operator.

Fig. 4 Setting pushbutton to operator cylinder

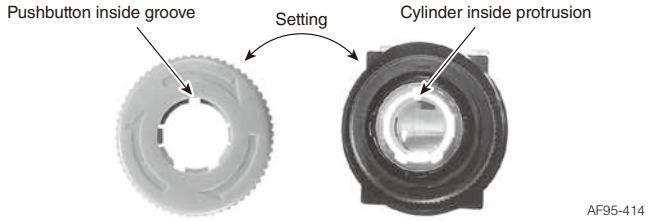

3. AR30WR, WCR

(1) As shown in the following figure, insert the tip of a flathead screwdriver into the selector tip groove. Rotate the screwdriver in the direction indicated by the arrow until the selector tip rises, and draw out the knob.
(2) Attach the operator in the same manner as described in step 1.
(3) Insert the knob, with the selector tip in the floated state, into
the original position of the rotation tube, and push the selector tip into place.

Fig. 5

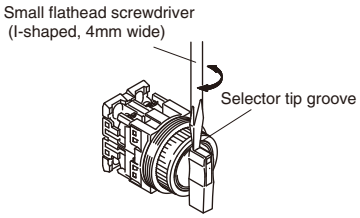

4. AR30M0R, M4R, M5R, B0R, Q7L

(1) Loosen the button by hand.
(2) Attach the operator in the same manner as described in step 1.
(3) Screw in the button by hand, making sure that the button is screwed in all the way. (Recommended tightening torque: 0.3 to 0.5 N•m)

Fig. 6

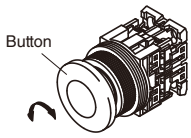

5. AR30M3R, M8R, B1R, B2R and B3R

The outer circumference of the nut is threaded, so be careful not to cut your hand on it.

(1) Loosen and remove the guard ring by hand.
(2) Loosen and remove the button and nut by hand.
(3) Insert the operator into the cutout hole from the back of the panel, and tighten the nut to secure it in place.
(Recommended tightening torque: 0.3 to 0.5 N•m)
(4) Screw in the button by hand, making sure that it is screwed in all the way.
(Recommended tightening torque: 0.3 to 0.5 N•m)
(5) Loosen and remove the guard ring by hand. (Recommended tightening torque: 1.5 to 2.5 N•m)

Fig. 7

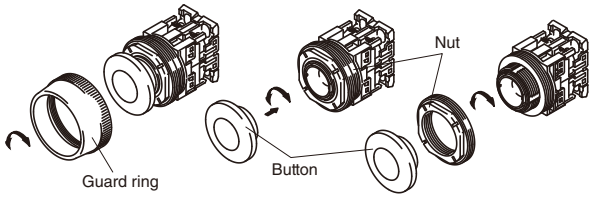

AR30 and DR30
Notes on use

6. AR30N0R, V1R, Q2R

(1) Loosen and remove the screw on the side of the button, taking care not to loosen the screw.
(2) Attach the operator in the same manner as described in step 1.
(3) Attach and secure the button in place with the screw, making sure that the head of the screw does not protrude from the side.
(4) Recommended tightening torque: N0R, V1R 0.5 to 1.0N•m
Q2R 0.3 to 0.5N•m

Fig. 8

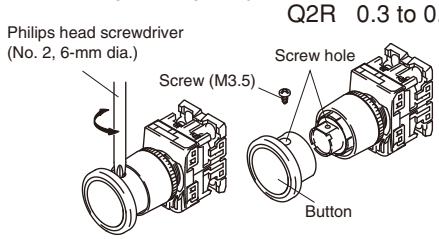

7. AR30GSR

(1) Insert the tips of the AR9A001 wrench into the indentations around the button center, and turn the wrench to loosen and remove the button.
(2) Loosen and remove the guard ring by hand.
(3) Insert the switch operator into the cutout hole from the back of the panel, and secure it with the guard ring from the front of the panel. (Recommended tightening torque: 1.5 to 2.5 N•m)
(4) Attach and secure the button with the AR9A001 wrench. (Recommended tightening torque: 0.3 to 0.5 N•m)

Fig. 9

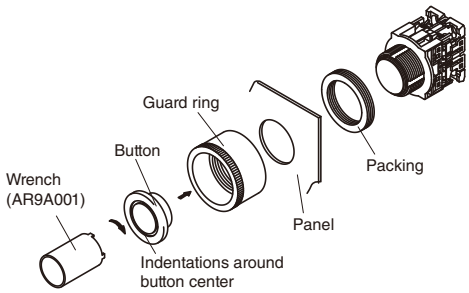

8. DR30F4M, F4N, M4M

Insert the pilot lights from the front of the panel and fix it with the AHX536 tightening wrench from the back of the panel.
(1) Recommended tightening torque: 1 to 1.5N•m
(2) For pilot lights with transformers and resistance units, remove the transformer or resistance unit in advance. (Fig.10)

Fig. 10

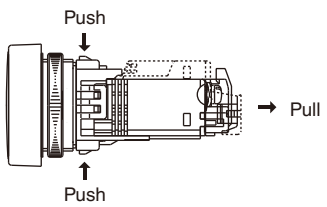

9. Mounting a 22mm-dia. command switch with a square button and a square bezel, or with a round button and a square bezel, to a panel cutout hole for a 30mm-dia. command switch using an adapter

As shown in Fig. 11, mount an adapter and packing onto a 22mm-dia. command switch (AR22, DR22 series) with a square button and a square bezel or one with a round button and a square bezel. Then, insert the switch operator into the panel cutout hole from the front of the panel. Use AR9A004 wrench section A to tighten the locking nut from behind the panel to secure the switch.
Use the adapter accessory nut for this purpose. Do not use the command switch accessory nut.

Fig. 11 Command switch with a square button and a square bezel, and command switch with a round button and a square bezel

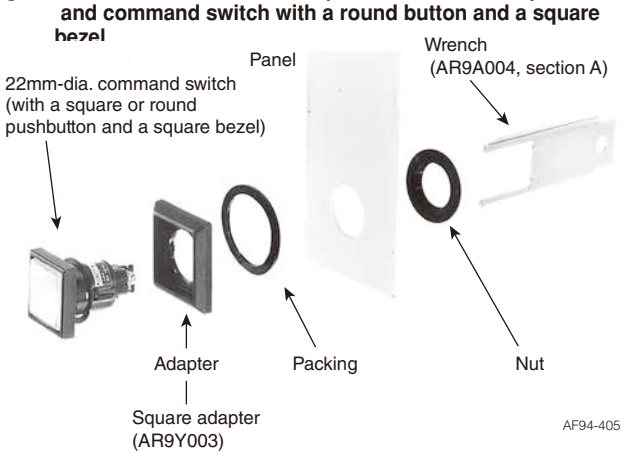

Note : • Recommended tightening torque is from 1 to 1.5N•m.
• Panel thickness: 2.5 to 5mm

This adapter can be used with the following 22mm-dia. Command switches :
- AR22F0M, F5M, E0M, E5M, F0P, F5P, E0P, E5P, M4P
- AR22F0S, F5S, E0S, E5S, F0Y, F5Y, E0Y, E5Y, M4Y
- AR22PY, PCY, WY, WCY, RY, RCY, JY, JCY, PP
- DR22F3M, F4M, F5M, E3M, E3P

10. AR30S1R, S2R, S3R, S6R

(1) Attach the operator in the same manner as described in step 1.
(2) Attach the rosette assembly to the operator.
(3) Pressing the rosette from the directions indicated by the arrows, insert the selector tip in the groove.
(4) Make sure that the selector tip is inserted completely.
(5) To remove the rosette, use a small flathead screwdriver to remove the selector tip as described in step 3, and then remove the rosette.

Fig. 12

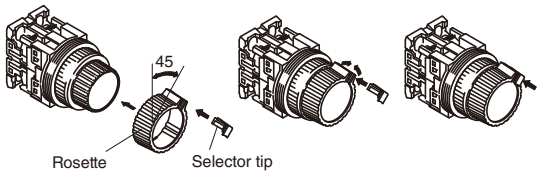

11. AR30A (joy stick selector)
(1) Remove the clamp ring as shown in the following figure.
(2) Attach the operator in the same manner as described in step 1.
Note: Even if a lock type is used, remove the clamp ring in the same manner.

Fig. 13

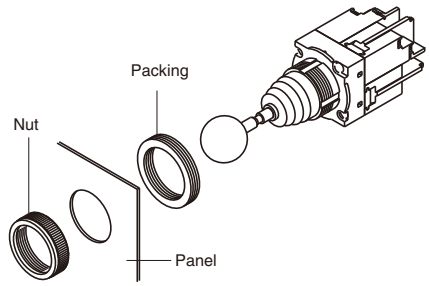

12. AR30HR
(1) The lever is removed after loosening the nut by hand.
(2) Loosen and remove the tightening nut by hand.
(3) Insert the operator into the cutout hole from the back of the panel, and tighten the tightening nut with the AHX001 wrench or AR9A006 wrench from the front of panel to secure the operator as shown in Fig. 14.
(Recommended tightening torque : 1.5 to 2.5N • m)
(4) Attach the lever assembly to the operator.
(5) Screw in the nut by hand, making sure that it is screwed in all the way.

Fig. 14

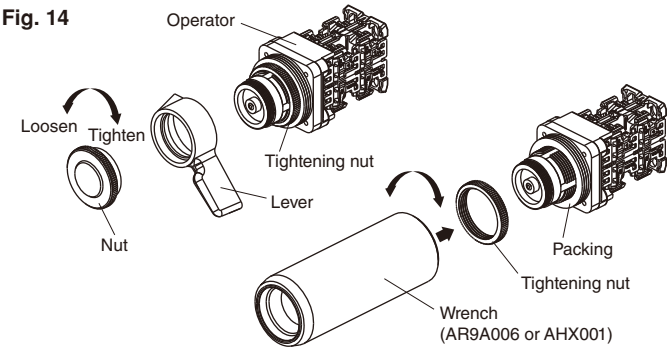

■ Water-proof and dust-proof cap

Applicable type: Water-proof cap AHX052
Dust-proof cap AHX032, 033, 034, 113, 157

When attached to the panel in combination with a water-proof or dust-proof cap, the water-proof cap or dust-proof cap may sink downward and prevent the depressed button from returning to its original position.
As shown in the following figure, cut an approximately 5-mm air outlet in the portion of the ring packing touching the panel surface. Also, reduce the number of packing rings by one below the standard number. The clamp ring tightening torque is 1.5 to 2.5 N•m.

Fig. 15

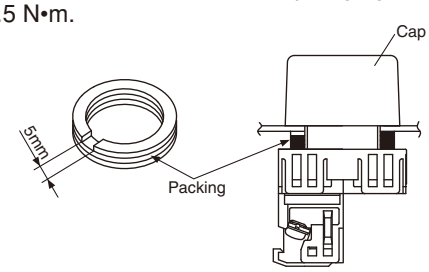

Degree of protection
The water-proof cap or dust-proof cap seals the panel surface to provide IP65 protection.

■ Applicable panel thickness

The AR30/DR30 series switches are mountable to panels with the thickness given in the table below.

Switch mounting condition		Applicable panel thickness
Without accessories		1 to 6mm
With accessories	AR9Y003 adapter	2.5 to 5mm

■ Using accessory ring-packings

Use the required number of ring-packings (1.6mm-thick, 4 pieces, resin mold).
Table below is a guideline for using the packings.
If a locking nut or legend plate is used, the thickness must be counted as an additional panel thickness.

Panel thickness vs. number of packings (reference data)

Effective panel thickness including lock-ring and legend plate thicknesses	Number of packings
1.0mm to less than 2.0mm	
2.0mm to less than 3.6mm	
3.6mm to less than 5.0mm	
5.0mm to less than 6.0mm	

■ Minimum mounting space, mm

The minimum mounting spaces required for AR30/DR30 command switches are given below. (Fig. 16)

Fig. 16

- Illuminated pushbutton and pushbutton
- Emergency stop illuminated pushbutton and emergency stop pushbutton
- Illuminated and non-illuminated selectors
- Pilot light

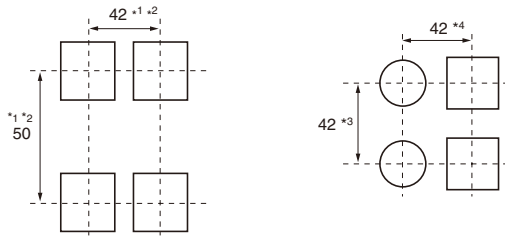

Notes: *1 AR30M3R, M8R, GSR: 55mm
*2 AR30B□R, GPR, V1R: 80mm

Type	*3	*4
F4M	34	34
F4N (Vertical lengthwise mounting)	40	34
(Horizontal lengthwise mounting)	34	40
M4M	40	40
Pilot lights short-body with transtormer	50	42
Pilot light with resestor	80	42

Other items are the same as for the AR22 and DR22 series, *see page C1-50 to C1-54*.

AR30 and DR30
Notes on use

13. AR30VPR, VPL

■ Panel Cutout [mm]

Fig. 17

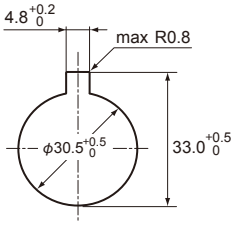

■ Applicable panel thickness

The applicable panel thickness is 1 to 6mm.
If a legend plate is used, the panel should be made thinner by subtracting the thickness of that component.

Note : If a legend plate or such kind of one is used for between the switch and the fitting surface of the panel, the thickness of the legend plate should be 1.6mm or less. If the thickness exceeds the value of 1.6mm, it may prevent the fixing function of the switch.

C1

■ Mounting the switch

• Removing the operator from the contact unit

Pull down the release cover of the contact unit, turn it counter clock wise in 15 degrees, at the position pull the contact unit, after that, the contact unit can be removed from the operation unit.

Fig. 18

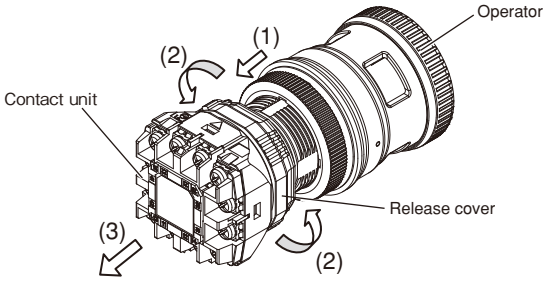

· Caution at the removing process of the contact unit from the operation unit

(1) When the contact unit is removed from the operation unit, at the process, “NO” contact of the unit is turned into “ON” position.

(2) At the process when the contact unit is removed from the operation unit, don’t give excessive force to the unit. It may cause the switch to break or to go into mal operation.

(3) During the removing work of the contact unit from the operation unit, not depending on the operation position of the operation unit, temporarily the NC contact becomes at conductive state (At the time, the NO contac is at open state).

• Mounting the operator on the panel

Fig. 19

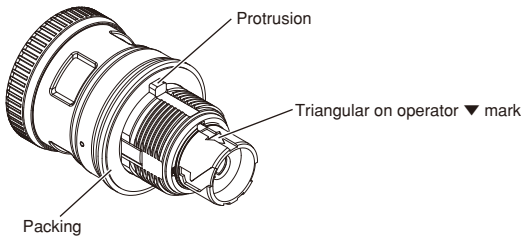

Remove the tightening nut from the packaged state of the operation unit, checking the packing whether it is placed properly on to the fitting surface of the front side of the panel, insert the operation unit keeping whose ▼ mark at the top position into the installation hole of the panel.
The operation unit penetrates the panel through the installation hole to the rear side of the panel. It is fixed at the rear side of the panel with the tightening nut turned by the tightening wrench (AHX536).

Fig. 20

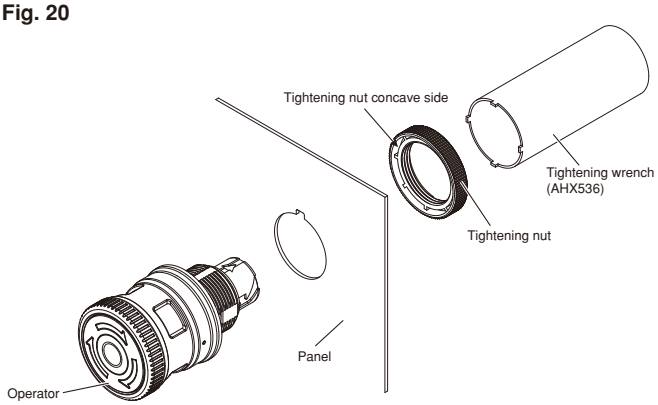

Note 1 : The proper tightening torque is 1.5 to 2.5 N·m.

Note 2 : The tightening nut has two faces, convex and concave.
Face the concave side of it to the panel when it tightens up the operation unit at the rear side of the panel.
If it is used in the opposite face, the operation unit will not be fixed properly there.

Note 3 : Check the tightening nut regularly whether it tightens the operation unit properly.
If it seems that tightening is not sufficient, do not forget to tighten the screw increasingly.

Note 4 : Do not use pliers or other improper tools to tighten the nut, and do not tighten it excessively, or the nut may be damaged or the switch may malfunction.

• Mounting the contact unit

Meet the mark ▼ on the contact unit to the same mark ▼ on the operation unit, insert the contact unit completely into the operation unit until it makes a click sound. (The click sound tells that the contact unit is completely connected to the operation unit.)
Please consider it when you do it.
After the contact unit is set, could you check the sequence and confirm the unit whether it operates well?

Fig. 21

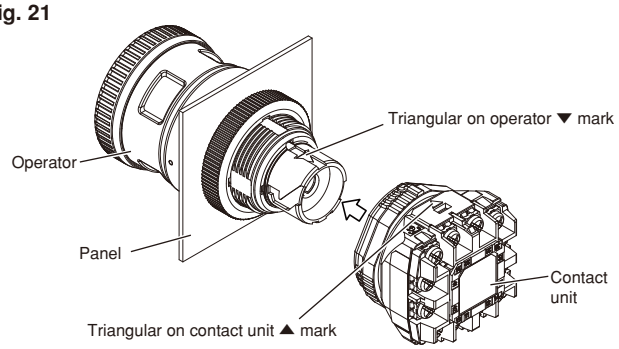

· Caution when the contact unit is set in

(1) The “position” of the release cover of the contact unit which is being connected to the operation unit is different from the “position” of it of the contact unit which is removed from the operation unit.
However, it is normal.

(2) When the contact unit is connected to the operation unit, it should be connected in the specified correct way. When two units arec onnected, meet the apex of the triangle mark on the contact unit to the apex of the triangle mark on the operation unit.
Connecting the units without meeting each apex of their

triangle marks may cause the switch to break.
If there is a switch recognized broken is remained there, it should not be used for any purpose.

(3) During the mounting work of the contact unit from the operation unit, not depending on the operationp osition of the operation unit, temporarily the NC contact becomes at conductive state (At the time, the NO contact is at open state).

Fig. 22
Terminal Arrangement (BOTTOM VIEW)

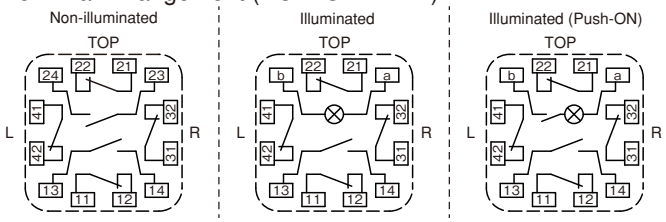

(4) Size and weight of the Padlock and Hasp
Applicable Padlock and Hasp are shown below.

Fig. 23
· Padlock size

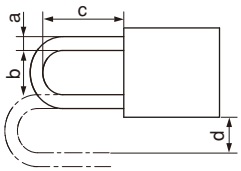

a	b	c	d
7mm maximum	19mm minimum	37mm minimum	15mm maximum*

*: Dimension “d” is 6mm or more when attaching a padlock from the side of switch.

· Recommended Hasp

Manufacturer	Type
Master Lock	420 421

Since various from and sizes are available, make sure of applicability using the actual padlock and hasp before use.
The total weight of the padlock and hasp can be a maximum of 1500g. When the total weight exceeds this limit, the switch may malfunction or fail.
When the padlock is used, consider enough space or distance between the padlock and adjacent devices for locking or unlocking it appropriately.
When the product is positioned at its mark ▼ is in top side, the padlock or HASP can be used at both right and left sides of the product or bottom side of it as they are shown in the illustrations below.

Fig. 24

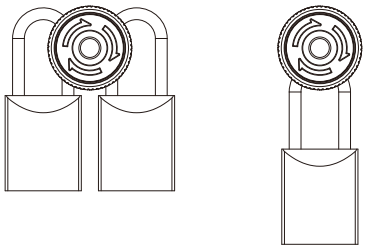

AR22/DR22 and AR30/DR30 Accessories

Accessories

Description	Type
Wrench KK02-261	**AR9A004** Dimensions, mm: 30 x 100 x 6.5 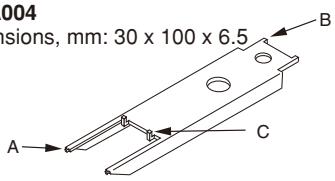 Remarks Section “A” Use this section to tighten the nut for mounting the operator on a panel. Section “B” Use this section to tighten or remove the lens. Applicable type: AR22F0L, F5L, E0L, E5L, F0P, F5P, E0P, E5P AR22G1L, G2L, G4L, G6L, G7L, G9L DR22E3L, E3P AR30E0L, E5L, G2L, G3L, G4L, G7L, G8L, G9L DR30E3L Section “C” Fit the tabs on the section “C” in the center button, and turn the wrench to tighten or remove the button. Applicable type: AR22V (except V4R, VG type) AR30V (except V1R type)
Wrench for AR22, DR22 	**AR9A701** Dimensions, mm: ø28 x 70 Application: AR22, DR22 nut tightening
Wrench KK02-097A	**AHX536** Dimensions, mm: ø32 x 76 Application: DR30F4M, F4N, M4M, N1, N2 nut tightening
Wrench KK02-098A	**AR9A001** Dimensions, mm: ø22 x 35 Application: AR22, DR22 round-type lens tightening AR22E0M, E5M oil-proof cap tightening AR30, DR30 round-type lens tightening AR30GSR button tightening
Wrench (for center button) 	**AR9A002** Dimensions, mm: ø18 x 60 Application: AR22V center button tightening (except V4R, VG type) AR30V center button tightening (except V1R type)
Wrench AF03-5	**AHX701** Dimensions, mm: ø25 x 72.5 Application: DR22N, AR22VG nut tightening

Description	Type
Wrench (for center button) AF93-6	**AHX8003** Dimensions, mm: ø14 x 50 Attaching and removing the center button of the AR22VGF type.
Wrench for AR22,30 and DR22, 30 AF96-241	**AR9A006** Dimensions, mm: ø40 x 100 To mount an AR22, 30 or DR22, 30 command switch to a panel, use this wrench to tighten the nut securely. It is very easy to fit this wrench onto the nut. The wrench with an inside rubber-lining can be easily used with either your right or left hand.
Wrench for AR30, DR30 AF95-467	**AHX001** Dimensions, mm: ø47 x 100 To mount an AR30 or DR30 command switch to a panel, use this wrench to tighten the nut securely.
Special tool AHX321 SG-873 DR9A321-T AF95-21	**AHX321** Dimensions, mm: 42 x 130 x 6.5 For all types except pilot lights **DR9A321-T** Dimensions, mm: 57 x 130 x 30 For pilot lights • This tool is used to remove contact blocks and transformer units. • The AHX321 can remove round color lens of switches.
Wrench/Lamp changer SI-1030	**AHX702** Dimensions, mm: ø36 x 55 Use this wrench to tighten or remove the lens and lamp. Used with: Lens of DR22D0L, K0L and DR30D0L, K0L Incandescent lamp of pilot lights and illuminated pushbuttons
Lamp changer AF95-22	**AHX790** Dimensions, mm: ø14 x 55 • Use this rubber wrench for mounting or removing lamps from pilot lights and illuminated pushbutton switches. • This wrench can be used for both LED and incandescent lamps. • One end is for the BA9S/13 lamp, and the other is for the E12/15 lamp (for use with 30mm dia. pilot lights with resistor). • For 30mm dia. pilot lights with resistor, this tool can also be used to attach or remove incandescent lamps.

Description	Type
Protection cover AF95-29	**AR9E760** This cover protects against accidental operation. The cover lid is returned home with a spring force. (Packing is provided) Used with: AR22F0L, F5L, E0L, E5L, F0M, F5M, E0M, E5M, F0P, F5P, E0P, E5P AR22F0R, F5R, E0R, E5R, F0S, F5S, E0S, E5S, E0Y, E5Y, F0Y, F5Y, FAR, FBR, EAR, EBR Dimensions, mm: 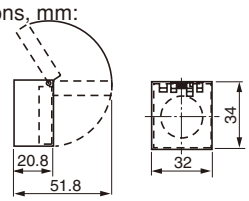
Cover for preventing operating errors with 30mm dia. types AF91-671	**AR9E538** Inadvertent operation can be prevented by fitting a transparent cover with chain in the clamp ring. Used with: AR30F0R, F5R, E0R, E5R, E0L, E5L Dimensions, mm: 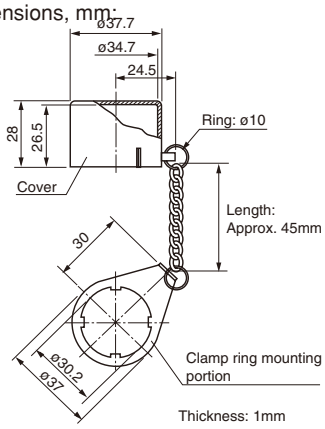
Cover for preventing operating errors with 30mm dia. types .AF93-420	**AHX408** This is a metallic cover for preventing inadvertent operation. Used with: AR30F0R, F5R Dimensions, mm: 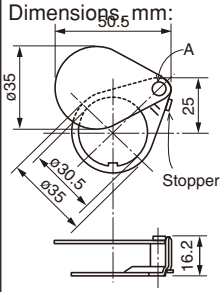 When attaching the cover to a vertical panel, if you attach it so that the portion indicated by an "A" is at the upper right, the stopper causes the cover to stop above the push button to halt further rotation. The material is steel (zinc plated).

Description	Type
Key washer for AR22, DR22 AF95-25	**AR9Y715** Use this metal washer when securing a operator in a 22.3mm dia. panel cutout hole. Dimensions, mm: 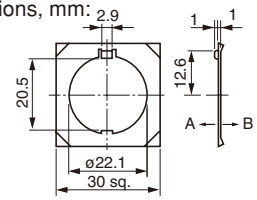 • When the periphery of the panel cutout has a hole to stop rotation, use with side A contacting the panel (except for Joy stick selector types). • Even when the periphery of the panel cutout does not have a hole to stop rotation, if used with side B contacting the panel it can serve as a washer for eliminating play (except for Joy stick selector types).
Key washer for ø30 SC-1016	**AHX082** Use this metal washer when securing an operator in a 30.5mm dia. panel cutout hole. Dimension, mm: 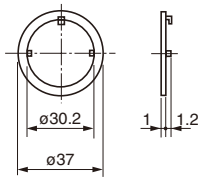
Operator base cover 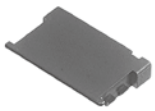 AF95-26	**AR9Y002** Attach this cover to the operator base of a pushbutton switch with only one contact block (1NO or 1NC) to protect against dust.
Adapter for AR22, DR22 AF95-28	**AR9Y718** Use this resin adapter to mount the AR22/DR22 (switch/pilot light) in a 25.5mm dia. cutout hole on a panel. Dimensions, mm: 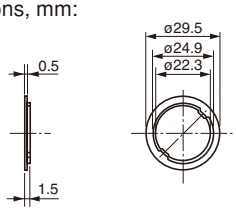

AR22/DR22 and AR30/DR30 Accessories

Description	Type
Adapter for AR22 and DR22	**AR9Y008** Use this resin adapter to mount the AR22/DR22 (switch/pilot light) in a 25.5mm dia. cutout hole on a panel. Mounting, mm: 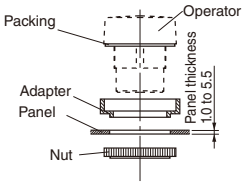 Panel cutout, mm: 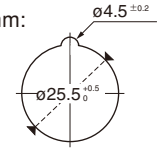 Equipped with device for stopping rotation Used with: AR22, DR22 round head types (except for M3R, M8R, VG□, joy stick selectors and buzzers) Dimensions, mm: 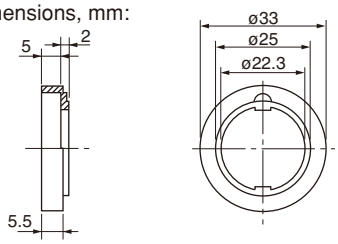 AF98-198
Adapter for AR30 and DR30	**AR9Y003** Mount this adapter onto a 22mm dia. command switch with a square button and a square bezel to obtain a 30mm dia. command switch with a square/round button and a square bezel. A resin ring-packing and a nut are accessories of the adapter. Dimensions, mm: 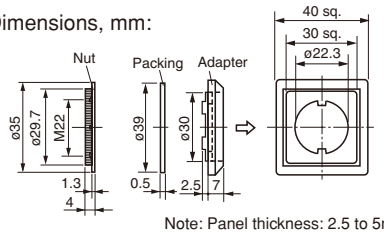 Note: Panel thickness: 2.5 to 5mm AF95-416

Description	Type
Round-frame adapter for 30mm dia. types	**AR9Y004** By using this adapter in combination with the round type 22mm dia. command switch, the 22mm dia. command switch can be used as a 30mm dia. command switch/round frame type. Used with: AR22, DR22 round types (except for M3R, M8R,VG□, Joy stick selectors, buzzers) Dimensions, mm 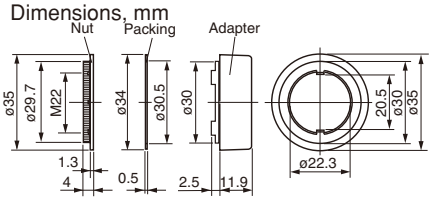 Note: Panel thickness: 2.5 to 5mm KK02-100A
Round-frame adapter for 30mm dia. type VG	**AHX958** Using this adapter in combination with model AR22VG (22mm dia.) allows mounting to a 30.5mm panel cutout hole. The attachment method is as follows. • The washer and nut (22.3mm dia.) originally attached to the operator will not be used, so remove them. • Attach the 22mm dia. packing (included), the 30mm dia. adapter and the 30mm dia. packing to the operator in that order, and insert the operator into the cutout hole. • From the back of the panel cutout hole, fasten the 30mm-dia. nut using the AHX701 wrench. The correct tightening torque is 1 to 1.5 N•m. 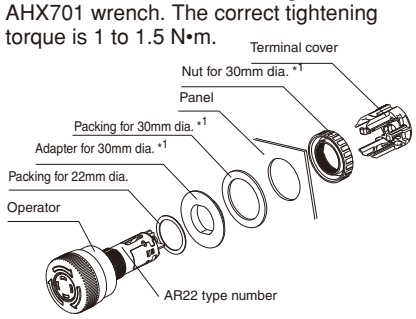 *1 Adapter for 30mm dia. (AHX958) Panel cutout, mm: 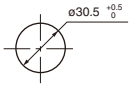 Dimensions, mm: 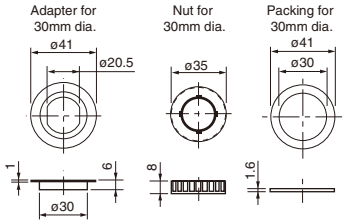 Note: Panel thickness: 1 to 6mm AF93-4

Description	Type
Legend plate for AR22	AR9P711-①②③ ① Color B: Black A: Aluminum This aluminum legend plate is for a 22.3mm dia. panel cutout hole. (Packing provided)

Legend	Code ②	Code ③
Blank	0	0
ON	0	A
OFF	0	B
START	0	C
STOP	0	D
OFF-ON	2	A

SI-1033

Dimensions, mm:

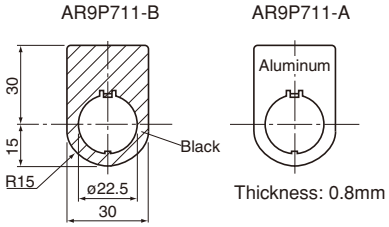

Description	Type
Legend plate for AR22	AR9P712-①②③ ① Color B: Black A: Partially black This aluminum legend plate is for a 22.3mm dia. panel cutout hole. (Packing provided)

Legend	Code ②	Code ③
Blank	0	0
ON	0	A
OFF	0	B
START	0	C
STOP	0	D
OFF-ON	2	A

SI-1032

Dimensions, mm:

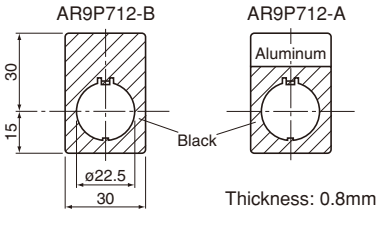

Description	Type
Legend plate for AR22	AR9P711-①②③ ① Color B: Black A: Partially black This aluminum legend plate is for a 22.3mm dia. panel cutout hole. (Packing provided)

Legend	Code ②	Code ③
Blank	0	0
ON	0	A
OFF	0	B
START	0	C
STOP	0	D
OFF-ON	2	A

AF95-114

Dimensions, mm:

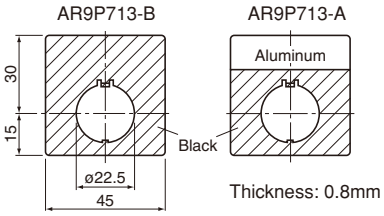

Description	Type
Legend plate for AR22 emerpency stop	AR9P719-①② Plate color: Yellow Letter color: Black This aluminum legend plate is for a 22.3mm dia. panel cutout hole. (Packing provided)

Legend	Code ①	Code ②	Letter hight
Blank	0	0	–
EMERGENCY STOP	5	A	7mm
	5	B	13mm
EMERGENCY OFF	5	C	13mm

KK02-265A

Dimensions, mm:

Thickness: 0.8mm

Note: Engraving for making letters is not available.

AR22/DR22 and AR30/DR30 Accessories

Description	Type
Legend plate for AR22 (width: 34mm)	AR9P015-B①② : Hight 36mm AR9P014-B①② : Hight 40.3mm Color: black

Legend	code ①	②
Blank	0	0
ON	0	A
OFF	0	B
START	0	C
STOP	0	D
OFF-ON	2	A

AF96-190

Optimal for use in combination with a 3-position selector switch.
Legend plates are available in two types: short, 36 mm; and long, 40.3mm.

Dimensions, mm:

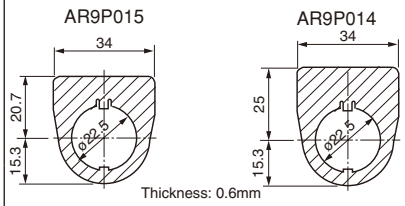

Description	Type
Legend plate with name plate for AR22	Legend plate **AR9P009-B** Name plate **AR9P010-B** ①② (34 × 8mm) Legend plate **AR9P011-B** Name plate **AR9P012-B** ①② (34 × 13mm) Legend plate **AR9P007-B** Name plate **AR9P008-B** ①② (27 × 16mm)

Name plate	Code ①	②
ON	0	A
OFF	0	B
START	0	C
STOP	0	D
OFF-ON	2	A

.AF96-190

Dimensions, mm:

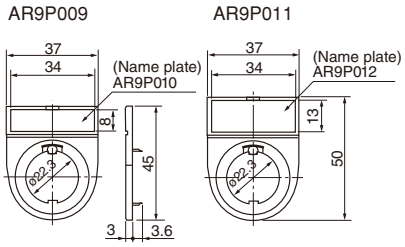

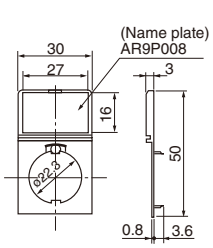

Description	Type
Legend plate for AR30	**AHX177-**①②③④ ① Material and color This legend plate is for a 30.5mm dia. panel cutout hole.

Code	Material	Color
S	Brass	Silver
B	Aluminum	Black
A		Aluminum

Y-1545

② Size
H: Standard
S: Short size

Legend	Code ③	④
Blank	0	0
ON	0	A
OFF	0	B
START	0	C
STOP	0	D
OFF-ON	2	A

AF89-466

AF87-49

Dimensions, mm:

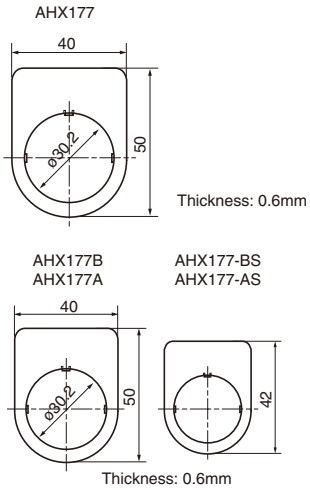

Description	Type
Legend plate for AR30 emergency stop	**AHX720-**①② Plate color: Yellow Letter color: Black This aluminum legend plate is for a 30.5mm dia. panel cutout hole.

Legend	Code ③	④	Letter hight
Blank	0	0	–
EMERGENCY STOP	0	A	7mm

SK-598

Dimensions, mm:

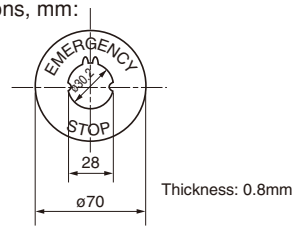

Note: Engraving for making letters is not available.

Description	Type
Panel plug for AR22 and DR22 SI-1027	Round: **AHX725-B** Black **AHX725-H** Gray Square: **AHX726-B** Black **AHX726-H** Gray Dimensions, mm: ø29.5 x 17 (AHX725) 29.5 sq. x 17 (AHX726) Use this plug to cover up unused panel cutout holes. For oil proof usage, use together with packing (AR9Y730) and a nut (AR9R744).
Panel plug for AR30 and DR30 T-1993	**AHX004** Color: Silver (metal) This plug is used to cover up unused panel cutout hole. Dimensions, mm: 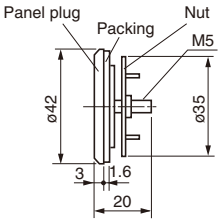

Description	Type
Group panel for 22mm dia. type AF97-233	**DR9Y004** These new 22mm dia. command switch/ square types can be neatly aligned side by side on this group panel at a 30mm pitch to form a uniform panel face with no misalignment between mounted switches. Depending on the number of switches to be grouped (maximum 12), the panel can be divided (by cutting at the portion indicated by an asterisk (*)). Mounting, mm: (example showing a group of three) 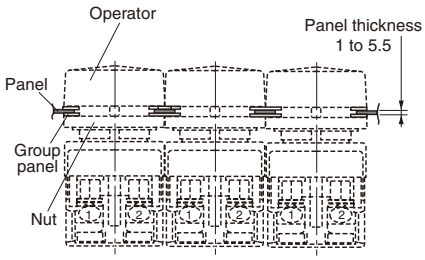 Dimensions, mm: 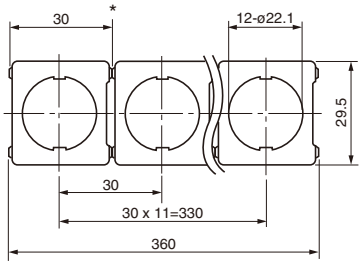 Thickness: 0.8mm
Jumper AF95-153 AF95-27	**APCX029** (For pilot light without transformer) **DR9Y001** (For pilot light with transformer) Use this jumper to connect terminals allocated in a 30mm pich. Rated current is 3A Dimensions, mm: APCX029 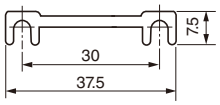 DR9Y001 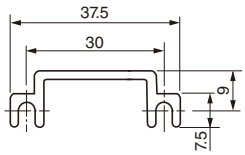 Thickness: 0.5mm

AR22/DR22 and AR30/DR30 Accessories

Description	Type

Lens for illuminated pushbutton switch and pilot lights

AF94-458

Type	Used with
AR9C011-□[*1]	AR22F0L, F5L, F0P, F5P
AR9C012-□[*1]	AR22E0L, E5L, E0P, E5P AR22G1L, G2L, G4L, G6L, G7L, G9L DR22E3L, E3P AR30E0L, E5L, G2L, G3L, G4L, G7L, G8L, G9L DR30E3L
AR9C013-□[*1]	AR22F0M, F5M
AR9C014-□[*1]	AR22E0M, E5M DR22E3M, F5M
AR9C015-□	AR22M4L, M4P
AR9C016-□	AR22M0L, M5L
DR9C001-□	DR22D0L DR30D0L[*2]
DR9C002-□	DR22K0L DR30K0L[*2]
DR9C120-C	DR30M4M
DR9C121-C	DR30F4N
DR9C122-C	DR30F4M
DR9C126-□[*1]	DR22F3M
DR9C126-C	DR22F4M
DR9C127-□[*1]	DR22E3N

Replace the □ mark by the lens color code

Color	Green	Red	Clear	Yellow
Code	G	R	C	Y

Color	Orange	Blue	White
Code	A	S	W

Notes: *1 When the main unit code is "W" (white), use a lens of clear color.
*2 Except for pilot lights with resistor

Button for pushbutton switch

AF94-461

KK02-101A

KK02-102A

KK02-103A

Type	Used with
AR9C001-□	AR22F0R, F5R, F0Y, F5Y, G2R, G7R AR30F0R, F5R, FVR AR22S1R, S2R, S3R, S6R AR30S1R, S2R, S3R, S6R
AR9C003-□	AR22E0R, E5R, G0R, G3R, G5R, G8R AR22E0Y, E5Y AR30E0R, E5R, G0R, G1R, G5R, G6R
AR9C004-□	AR22F0S, F5S
AR9C005-□	AR22E0S, E5S
AR9C006-□	AR22M4R, M9R, M4Y AR30M4R
AR9C007-□	AR22M0R, M5R AR30M0R, M3R, M5R, M8R
AR9C024-□	AR30B0R, B1R, B2R, B3R
AR9C027-C	AR22FAR, FBR, AR30FAR, FBR
AR9C028-C	AR22EAR, EBR, AR30EAR, EBR
AR9C041-R	AR30N0R
AHX539	Cap for AR30FVR

Replace the □ mark by the button color code

Color	Green	Red	Black	White
Code	G	R	B	W

Color	Yellow	Orange	Blue
Code	Y	A	S

Center button (For V type)

AF95-32

Type	Used with
AR9C020-R	AR22V0R, V2R, VSR AR30V0R, V2R
AR9C020-□	AR22V5R, AR30V5R
AR9C018-R	AR22V0L, V2L, VDL, VAL, VSL AR30V0L, V2L
AR9C018-□	AR22V5L*, AR30V5L*

Replace the □ mark by the button color code

Color	Red	Black	Yellow
Code	R	B	Y

Note: * V5L: Red and yellow only

Push-lock, turn-reset button (V and Q types)

AF95-31

KK02-104A

Type	Used with
AR9C008-R	AR22V4R
AR9C010-R	AR22Q2R, AR30Q2R
AR9C017-R	AR22V2R, V2L, AR30V2R, V2L
AR9C019-R	AR22VAL
AR9C021-R	AR22V0R, V0L, AR30V0R, V0L
AR9C021-□	AR22V5R, V5L*, AR30V5R, V5L*
AR9C026-R	AR22VDL
AR9C029-R	AR30V1R
AR9C040-R	AR22VSR, VSL

Replace the □ mark by the button color code

Color	Red	Black	Yellow
Code	R	B	Y

Note: * V5L: Red and yellow only

Knob

AF95-43

Type	Used with
AR9M006-□	AR22PR, PCR, PY, PCY AR30PR, PCR

Replace the □ mark by the knob color code

Color	Black	Green	Red
Code	B	G	R

Lever

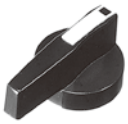

AF95-42

Type	Used with
AR9M007-□	AR22WR, WCR, WY, WCY AR30WR, WCR

Replace the □ mark by the lever color code

Color	Black	Green	Red
Code	B	G	R

Cylindrical knob

AF95-44

Type	Used with
AR9M008-□	AR22RR, RCR, RY, RCY

Replace the □ mark by the knob color code

Color	Black	Green	Red
Code	B	G	R

Description	Type
Knob (for illuminated selector switch) AF94-465	Type / Used with **AR9M005-□** AR22PL, PP AR30PL Replace the □ mark by the knob color code Color: Green, Red, White Code: G, R, W Color: Yellow, Orange, Blue Code: Y, A, S
Key KKD09-012	Type / Used with **AR9C022-□** AR22JR, JCR, AR30JR, JCR, **AR9C025-□** AR22JAR, AR30JAR Replace the □ mark by the key type code. Code: A, B, C, D, E or F, 6 types.
Legend plate (for F type with round bezel) AF94-459	**AR9P001-W** This part is made of acrylic resin. Use paint or thinner compatible with resin. Dimensions, mm: ø17.8 x 0.9
Legend plate (for E type with round bezel) AF94-459	**AR9P002-W** This part is made of acrylic resin. Use paint or thinner compatible with resin. Dimensions, mm: ø19.7 x 4.2
Symbol mark plate AF98-197	Type / Used with **AR9P019-□ □ ■** AR22FAR, FBR, AR30FAR, FBR **AR9P020-□ □ ■** AR22EAR, EBR, AR30EAR, EBR □ □ ■ : Symbol: ○ / I / Ⓣ / ○ / I / Ⓣ Plate: W B / W B / W B / Clear Symbol: Red / Green / Green / Black Code: 01 02 / 03 04 / 11 12 / 02B / 04B / 12B W: White, B: black

Description	Type
Legend plate and color plate (for F type with square bezel) AF94-460 KK02-105A KK02-106A KK02-107A	• Legend plate Type / Used with **DR9P241-W** AR22F0M, F5M DR22F3M, F4M **DR9P242-WP** DR30M4M **DR9P242-W** DR30M4M, LED(W) **DR9P243-WP** DR30F4N **DR9P243-W** DR30F4N, LED(W) **DR9P244-WP** DR30F4M **DR9P244-W** DR30F4M, LED(W) Types DR9P242, 243 and 244-W are LED illuminated, and used exclusively with operators having a "W" in the type number. • color plate Type / Used with **DR9P241-□** DR22F3M, F4M **DR9P242-□** DR30M4M **DR9P243-□** DR30F4N **DR9P244-□** DR30F4M Replace the □ mark by the color code Color: Green, Red, White Code: G, R, W Color: Yellow, Orange, Blue Code: Y, A, S This part is made of acrylic resin. Use paint or thinner compatible with resin. Dimensions, mm: DR9P241: 20.8 sq. x 0.8 DR9P242: 33.4 sq. x 1 DR9P243: 33.4 x 27.4 x 1 DR9P244: 27.4 sq. x 1
Legend plate (for E type with square bezel) AF94-460 AF94-460	Type / Used with **AR9P003-W** AR22E0M, E5M DR22F5M, E3M **DR9P001-W** DR22E3N This part is made of acrylic resin. Use paint or thinner compatible with resin. Dimensions, mm: AR9P003-W: 20 sq. x 4.8 DR9P001-W: 19.7 x 26.7 x 4.5
Legend sheet AF95-34	**AHX727** Affix this seal to the DR9P241-□/AR9P003 legend plate for marking or labeling. Dimensions, mm: 20 sq. x 0.025

AR22/DR22 and AR30/DR30 Accessories

Description	Type

LED lamp

KKD06-208

Type	Lamp voltage
APX510-6 □	6V AC
APX510-D6 □	6V DC
APX510-12 □	12V AC/DC
APX510-15 □	15V AC/DC
APX510-24 □	24V AC/DC

Replace the □ mark by the luminous color code

Luminous color	Yellow	Red	Green
Code	Y	R	G
Lens color	Y	R	G

Luminous color	Amber	Orange	Blue
Code	A	O	S
Lens color	A	W, A*	S

* Orange is available only for the DR22F4M pilot light.

Dimensions, mm:

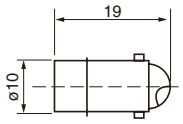

Lamp base: BA9s/13

LED lamp (for DR30 with resistor)

KK02-110A

KK02-111A

Type	Lamp voltage
APX507-24 □	24V AC/DC
APX509-24O	

Note:
The symbol in the box indicates the color of light emitted. (See note APX510.)
When the code is "W" (white), use an LED lamp ((APX.509-24O)

Dimensions, mm:

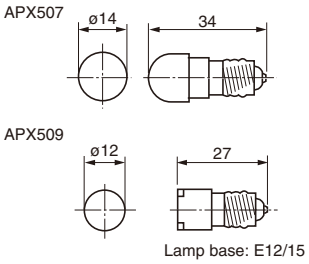

Lamp base: E12/15

LED lamp (for AR22VGF type)

KK02-109A

Type	Lamp voltage
AR9L002-ER	24V AC/DC

Luminous color: Red

Dimensions, mm:

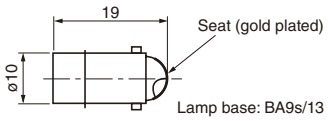

Lamp base: BA9s/13

Do not use the LED lamp for other types.

Description	Type

Neon lamp (for AR22VGF type)

KK03-038

Type	Lamp voltage
AR9N001-HA	110V AC
AR9N001-KA	120V AC
AR9N001-MA	220V AC
AR9N001-PA	240V AC

Luminous color: Orange

Dimensions, mm:

Do not use the LED lamp for other types.

LED lamp for DR30 (square type)

KKD06-208

Type	Lamp voltage
DN6Q005-6 □	6V DC
DN6Q005-2 □	12V AC
DN6Q005-B □	12V AC/DC
DN6Q005-E □	24V AC/DC

Replace the □ mark by the luminous color code

Luminous color	Yellow	Red	Green
Code	Y	R	G
Lens color	Y	R	G

Luminous color	Amber	Orange
Code	Y	W
Lens color	Y	W

Dimensions, mm:

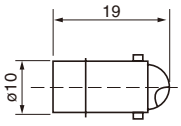

Lamp base: BA9s/13

Do not use the LED lamp for other types.

Description	Type
Incandescent lamp	

AF89-427

Type	Lamp voltage	Rated voltage, consumption
AHX135	5.5V AC/DC	6.3V AC/DC, 1W
AHX279	15V AC/DC	18V AC/DC, 1W
AHX144	20V AC/DC	24V AC/DC, 1W
AHX129	24V AC/DC	30V AC/DC, 1W

Dimensions, mm:

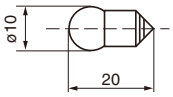

Lamp base: BA9s/13

Incandescent lamp (for DR30 with resistor)

KK02-115A

Type	Lamp voltage	Rated voltage, consumption
AHX130	15V AC/DC	18V AC/DC, 2W

Dimensions, mm:

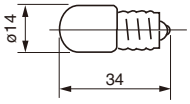

Lamp base: E12/15

Contact block (1NO)

AF94-455

AR9B290 Standard
AR9B290-S Overlap

Color: Blue
Dimensions, mm: 19.3 x 29 x 27

Note: Terminal cover is not supplied with this.

Contact block (1NC)

AF94-455

AR9B291 Standard
AR9B291-S Overlap

Color: Red
Dimensions, mm: 19.3 x 29 x 27

Note: Terminal cover is not supplied with this.

Lamp terminal

AF94-456

AR9B292

Color: Black
Dimensions, mm: 19.3 x 29 x 27

Note: Terminal cover is not supplied with this.

Description	Type
Contact protection cover	

KK02-117A

Type	Used with *
AR9D001-1	AR22, 1-step contact
AR9D001-2	AR22, 2-step contact
AR9D002-1	AR30, 1-step contact
AR9D002-2	AR30, 2-step contact

- The contact is covered with a silicon rubber cover to keep out foreign matter such as dust, etc.
- Section A of the AR9D001 is separate.

* See page C1-122, “AR22 □ Z8, AR30 □ Z8”

Dimensions, mm:

AR9D001-1

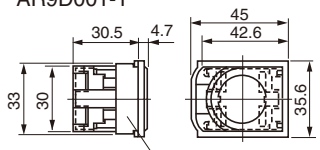

AR9D001-2

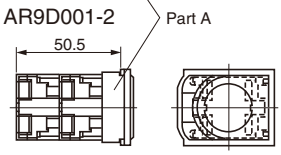

KK02-118A

AR9D002-1

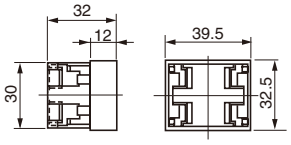

AR9D002-2

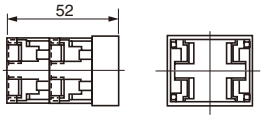

Transformer unit

AF94-457

AF95-33

Type	Primary voltage	Used with
AR9T511-H	100-110V AC	Standard type (except buzzers)
AR9T511-L	115-127V AC	
AR9T511-M	200-220V AC	
AR9T511-Q	230-254V AC	
AR9T511-S	350-380V AC	
AR9T511-T	400-440V AC	
AR9T511-V	480V AC	
AR9T511-W	500-550V AC	
AR9T557-H	100-110V AC	DR30F4N, F4M, M4M
AR9T557-L	115-127V AC	
AR9T557-M	200-220V AC	
AR9T557-Q	230-254V AC	
AR9T557-S	350-380V AC	
AR9T557-T	400-440V AC	
AR9T557-V	480V AC	
AR9T557-W	500-550V AC	

Dimensions, mm:
Up to 220 V 22.4 x 30 x 45
Over 220 V 25.3 x 29 x 48

Note: With terminal cover

AR22/DR22 and AR30/DR30 Accessories

Description	Type
Base unit for transformer separate mounting KK02-118A	**AR9T003** Use this base in combination with a transformer unit. This base unit can be mounted using screws or rails. Dimensions, mm 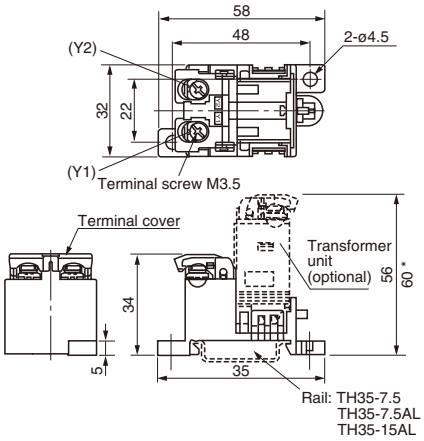 * Except for the types 110V AC, 127V AC and 220V AC.
Resistor Voltage stabilizer Device for LED lamp flickering AF95-33	Resistor: **AR9T519-H** (110V DC) Fit this resistor when using LED of 24V DC rating with 110V DC power. Voltage stabilizer: **AR9T001-E** This unit allows an LED lamp of 24V DC rating to be used in a circuit with voltage from 27V to 35V (AC or DC). Flickering device: 6V AC: **AR9T002-A** 6V DC: **AR9T002-6** 12 to 24V AC: **AR9T002-G** * 12 to 24V DC: **AR9T002-E** * * Used in combination with 12V, 15V, or 24V rated LED lamp. Note: With terminal cover
Nut AF94-462 KK2-119A	Type / Used with / Dimensions, mm **AR9R744** / AR22, DR22* / ø29.7 x 4 **DR9R001** / DR30F4M, DR30F4N, DR30M4M / ø33.8 x 5 * Except AR22VG□, Joy stick selectors, buzzers and numerical indicators

Description	Type
Nut for 30mm dia. types (Resin types are black, metallic types are silver.) KK2-120A KK2-121A KK2-122A KK2-123A	**AR9R001**: Resin types are black (standard) **AHX088**: Metallic types are silver Used with: AR30F0R, F5R, FAR, FBR, E0R, E5R, EAR, EBR, E0L, E5L, Q7L DR30D0L, E3L, K0L **AR9R002**: Resin types are black (standard) **AHX093** : Metallic types are silver Used with: AR30M0R, M5R, M4R, G0R, G5R, N0R, S□R, V□R, Q2R, V□L, PR, PCR, WR, WCR, JR, JCR, JAR, PL, A□N, A□H
Water-tight cap for 22mm dia. types KK2-124A	**AR9D797-□** This rubber cap protects the operator and switch mechanism against dust and water. Use this cap in a dusty or moist environment. Used with: AR22E0L,E5L AR22E0R, E5R Replace the □ mark by the luminous color code. Code / Color G / Green R / Red B / Black Y / Yellow Blank / Clear (standard) Dimensions, mm: 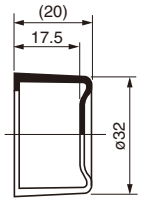
Water-tight cap for 30mm dia. types Y-1559	**AHX052** This rubber cap protects the operator and switch mechanism against dust and water. Use this cap in a dusty or moist environment. The only color available is transparent. Used with: AR30E□R, E□L Dimensions, mm: ø36 x 22.5

Description	Type
Dust-proof cap for 30mm dia. types	

SC-993

AF89-772

Type	Color	Used with	Spec.
AHX032	Red	AR30E0R	Oil-proof
AHX033	Green		
AHX034	Black		
AHX041	Red	AR30F0R	Oil-proof
AHX042	Green		
AHX043	Black		
AHX157-R	Red	AR30B2R, B3R	Oil-proof
AHX157-G	Green		
AHX157-B	Black		
AHX113-R	Red	AR30E0R	Weather resistance
AHX113-G	Green		
AHX113-B	Black		
AHX111-R	Red	AR30F0R	Weather resistance
AHX111-G	Green		
AHX111-B	Black		

Dimensions, mm:

AHX032 to 034, 041 to 043
AHX111, 113

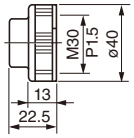

AHX157

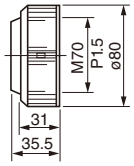

Used for sealing the operator from foreign debris such as dust, oil (oil-proof), and water (weather resistance) in environments where the unit is in contact with such elements.

Description	Type
Packing	

KK2-125A

AR9Y730:
AR22 and DR22 (Rubber)
Note: Except for joystick selector switches, buzzers

AHX282:
AR30 and DR30 (Resin-standerd)
Note: Except for DR30F4M, F4N, M4M, numerical indicators

AHX149:
AR30 and DR30 (Rubber)
Note: Except for DR30F4M, F4N, M4M, numerical indicators

Description	Type
Terminal cover	

AF94-466

KK2-126A

Type	Used with	Dimensions, mm
AR9Y305	Contact unit Lamp terminal Transformer unit *1	18.4 x 29 x 8.4
DR9Y320	Pilot lights *2 (without transformer)	ø22 x 5.8
DR9Y321	DR30F4M, F4N, M4M (without transformer)	34 sq. x 8.7

*1 Applicable up to 220V.
*2 DR22D0L, E3L, K0L, F□M, E3M, E3N, E3P, DR30D0L, E3L, K0L

The terminal cover is provided as standard with the applicable types listed above. (Except for joy stick selector switches, numerical indicators, pilot lights with resistors, contact block alone and lamp terminal alone)

Description	Type
Terminal cover	

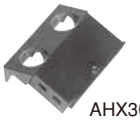
AHX305
SG-842

AHX426
AF92-339

AHX376
SG-5

Type	Used with	Dimensions, mm
AHX305	Buzzers (without transformer)	23.5 x 27.5 x 16
AHX426	DR30D1L (without transformer)	27.5 x 31 x 8
AHX376	DR30D1L (with transformer) Buzzers (B0 type) With transformer * With short-body transformer With resistor unit	13 x 29 x 6.5

* 230V and over

The terminal cover is provided as standard with the applicable types listed above.

AR22 Special products

Semi standard compliant guardring

■ Features

- Combine a guard ring with a Fuji electric emergency stop pushbutton switches to comply with SEMI (SEMI-S2, SEMATECH Application Guide for SEMI S2-93).
- EMERGENCY OFF legend plates are available.
- Emergency stop pushbutton switches labeled with “EMO” are available.

Combination with the AR22V2R Emergency stop pushbutton switch

Combination with the AR22V3R Emergency stop pushbutton switch (labeled with EMO).

■ Accessories

Description	Type	Color
Guardring (KKD05-263)	**AR9R008**	Yellow
Legend plate for AR9R008 emergency off (KKD05-262)	**AR9P721-5C**	Yellow (Black legend)

■ Emergency stop pushbutton switches

Operator	Contact	Type	Color
Push-lock, turn-reset (40mm dia, with "EMO" charactor) 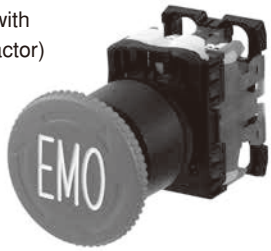 (KKD05-261)	1NC	**AR22V3R-01RZ286**	Red (White legend)
	1NO+1NC	**AR22V3R-11RZ286**	
	2NC	**AR22V3R-02RZ286**	
	1NO+2NC	**AR22V3R-12RZ286**	
	3NC	**AR22V3R-03RZ286**	
	1NO+3NC	**AR22V3R-13RZ286**	
	2NO+2NC	**AR22V3R-22RZ286**	
	4NC	**AR22V3R-04RZ286**	

Note : Contact arrangements indicated in the table can be supplied.

■ Dimensions, mm

● Guardring (AR9R008)

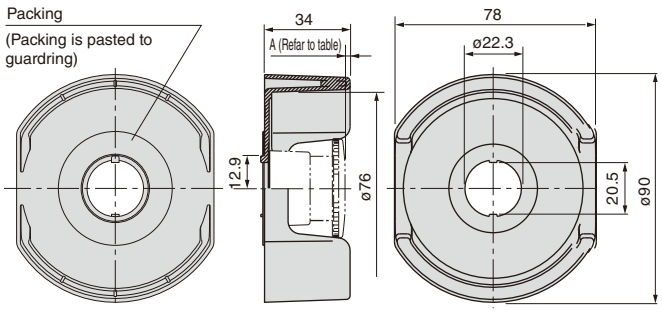

* Dimension A (the height difference between the switch and guardring) depends on the emergency stop (Illuminated) pushbutton switch that is being used. Refer to the following table.

Type	Panel thickness	A (Reference)	
AR22V2R	1~2.5	2mm	With AR9P721-5C
AR22V4R	1~2.5	2mm	With AR9P721-5C
AR22V2L	1~2.5	2mm	With AR9P721-5C
AR22VAL	1~2.5	2mm	With AR9P721-5C
AR22V3R (Z286)	1~3.6	3mm	

• Installation

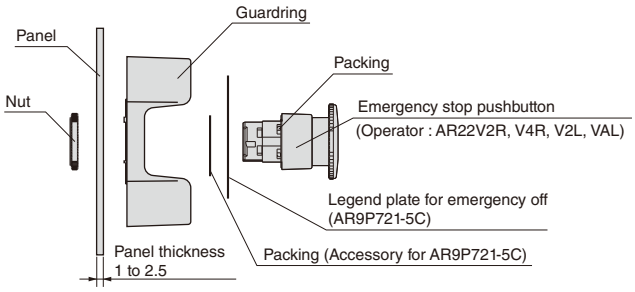

・Panel cutout hole dimensions, mm

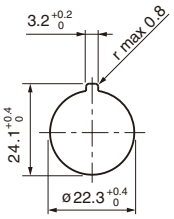

● Legend plate for emergency off (AR9P721-5C)

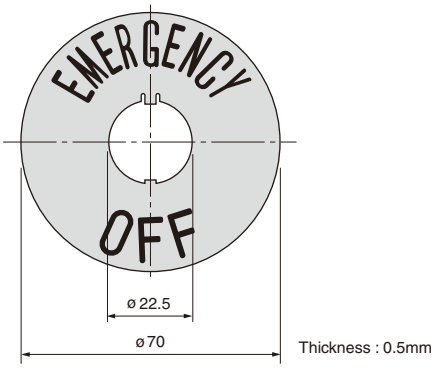

Note: ・Engraving for marking letters is not avaitable.
・Letter hight : 13mm

● Emegency stop pushbutton switches (AR22V3R-□□RZ286)

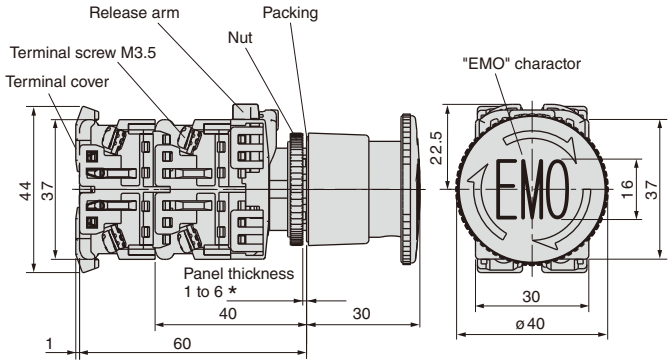

* Without accessories

■ Notes on use

This guardring conform to SEMI sandard. Please do not use it for the emergency stops other than Semiconductor manufacturing Equipment.

■ Applicable types

AR22V2R, V4R, V2L, VAL and V3R Z286

AR22/DR22 and AR30/DR30 Special products

Products equipped with contact protection cover

■ Features
A silicon rubber cover is provided for the contact block to keep out foreign matter such as dust, etc.
Other ratings and specifications are the same as those of the standard type.

■ Type
AR22 □ Z8
AR30 □ Z8
Specify "Z8" at the end of the type number of the standard type.

■ Dimensions
The only thing different from the standard product is the addition of a 1-mm thick silicon rubber cover around the contact block.

■ Applicable types

Type	Contact arrangement	Remarks
• Pushbuttons *1 • Emergency stop pushbuttons *2 • Selectors *3	1NO+1NC, 2NO*5, 2NC	For use with a 1-step contact
	1NO+3NC, 2NO+2NC, 3NO+1NC, 4NO*5, 4NC	For use with a 2-step contact
• Illuminated pushbuttons *4 (without transformer) • Emergency stop illuminated pushbuttons*2 (without transformer) • Illuminated selectors (without transformer)	1NO*6, 1NC	For use with a 1-step contact
	1NO+2NC, 2NO+1NC, 3NO*6, 3NC	For use with a 2-step contact

Notes: *1 Except for AR30B0R, B1R, B2R, B3R, N0R, and GPR.
*2 Except for unibody (VG types)
*3 Except for AR30HR
*4 Except for AR30Q7L
*5 Except for emergency stop pushbutton switch
*6 Except for emergency stop illuminated pushbutton switch

Resisting water-soluble cutting oils and heat

■ Features
Safer operation in environments exposed to water-miscible cutting fluids, machining oils, lubricating oils, cleaning oils and high humidity (up to 95%) is made possible by using materials that protect against rust and corrosion of components.
Other ratings and specifications are the same as those of the standard type.

■ Type
AR22 □ Z9, DR22 □ Z9
AR30 □ Z9, DR30 □ Z9
Specify "Z9" at the end of the type number of the standard type.

■ Dimensions
Same as those of the standard type

■ Applicable types
• AR22, DR22 series
AR 22 (Except for joy stick selectors, FAR, FBR, EAR, EBR types and VG types)
DR22 (Except for pilot lights with resistor unit and buzzers)

• AR30, DR30 series
AR30 (Except for Q7L, FAR, FBR, EAR, EBR, HR types and joy stick selectors)
DR30 (Except for D1L, F4M, F4N, M4M types, pilot lights with resistor/resistor unit and buzzers)

Meeting IP2X finger protection standards

■ Features
Conforms to EN standard EN60204-1 (protecting against electric shock). The terminal has IEC60529 degree of protection; IP2X finger protection secured (a mock human finger used in testing did not come into contact with charged parts).
The contact block and lamp terminal can be easily mounted or removed with the terminal cover mounted.

■ Type
AR22 □ ZB, DR22 □ ZB
AR30 □ ZB, DR30 □ ZB
Specify "ZB" at the end of the type number of the standard type.

■ Accessories
• Contact block (plus terminal cover)
NO contact: AR9B290-D
NC contact: AR9B291-D
•Transformer unit (plus terminal cover)
AR9T511-□ D

■ Ratings and specifications
• Protection degree: IP2X
• Terminal screw: M3.5
Wiring can be done with a solid wire or fork shaped crimp terminal.

Note: Ring-type crimp terminals cannot be used.

• Other ratings and specifications are the same as those of the standard type.

■ Applicable types
• AR22, DR22 series
AR22 (except for joy stick selectors)
DR22: Without transformer, with transformer (except for short-body types, buzzers and numerical indicators)

• AR30, DR30 series
AR30 (except for HR and joy stick selectors)
DR30: Without transformer, with transformer (except for D1L, F4M, F4N, M4M types and buzzers)

Note: The terminal of the standard type VG has IP2X protection.

■ Dimensions, mm

AR22/Pushbutton switches

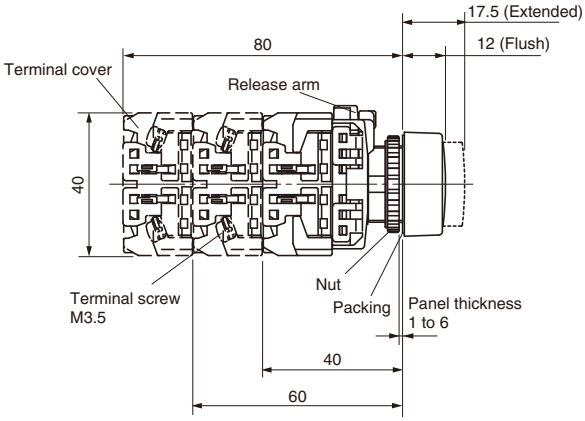

DR22/Without transformer

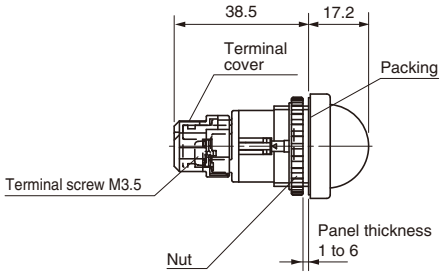

DR22/With transformer

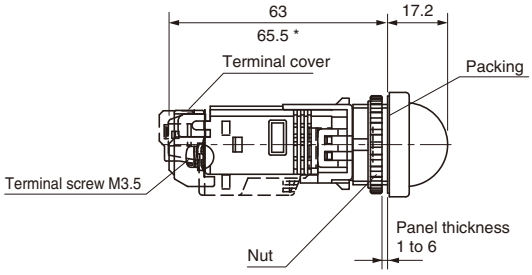

Note: * Except for the types 110V AC, 127V AC and 220V AC.

AR22/DR22 and AR30/DR30 Special products

Metal nut (chrome plated) types

■ Features
The nut is a metallic ring (chrome plated).
Other ratings and specifications are the same as those of the standard model.

■ Type
AR30 □ ZM
DR30 □ ZM
Specify "ZM" at the end of the type number of the standard type.

■ Dimensions, mm
Same as those of the standard types.

■ Applicable types
• AR30, DR30 series
AR30 (except for G4L, G9L, GSR*1, GPR*1, BOR*1,and HR*1 types)
DR30 with round bezel (except for IP54 buzzer type B8)*2

Notes: *1 Standard type is a metallic ring (chrome plated).
*2 The nut of types DR30B5 and B6 buzzers are resin (chrome plated).

KKD08-048
AR30E0R □ ZM

KK02-148A
AR30PR □ ZM

KK02-149A
DR30D0L □ ZM

Resisting sulfuration gas

■ Features
These products can be used in environments having a concentration of hydrogen sulfide gas of 0.5 ppm or less.
The metallic parts have been subjected to an anti-corrosion treatment (see note).
The contacts of the AR series are gold plated.

Note: The body is made of resin and cannot be used with gases that affect resins (plastics).

■ Type
AR22 □ Z4, DR22 □ Z4
AR30 □ Z4, DR30 □ Z4
Specify "Z4" at the end of the type number of the standard type.

■ Notes on use
• This product is resistant to light corrosive gas exposure.
• Other measures, such as covering the entire switch with a box, and the degree of protection of the panel should be taken into consideration.

■ Ratings and specifications
Hydrogen sulfide gas concentration of 0.5 ppm max.
Ambient storage temperature: 8 to 37°C
Humidity: 62 to 81%
Other ratings and specifications are the same as those of the standard type.

■ Dimensions, mm
Same as those of the standard types.

■ Applicable types
• AR22, DR22 series
AR22 (except for Joy stick selectors and VG type)
DR22 (except for pilot lights with resistor unit and buzzers)

• AR30, DR30 series
AR30 (except for HR and Joy stick selectors)
DR30 (except for F4M, F4N, M4M types, pilot lights with resistor/resistor unit and buzzers)

■ Mass, gram

● Illuminated pushbuttons

Type	Without transformer			With transformer *	
	1NO (1NC)	2NO (2NC) (1NO+1NC)	2NO+2NC	1NO (1NC)	2NO (2NC) (1NO+1NC)
AR22F0L	39	48	67	85	94
F5L	39	48	–	85	94
F0M, F0P	40	49	68	86	95
F5M, F5P	40	49	–	86	95
E0L	41	50	69	87	96
E5L	41	50	–	87	96
E0M, E0P, M4L, G1L, G2L, G4L	42	51	70	88	97
E5M, E5P, M9L, G6L, G7L, G9L	42	51	–	88	97
M4P	43	52	71	89	98
M0L	44	53	72	90	99
M5L	44	53	–	90	99
V5L	48	57	–	94	103

Note: * 230V and over : +17grams

● Pushbuttons

Type	1NO (1NC)	2NO (2NC) (1NO+1NC)	2NO+2NC
AR22F0R, FAR, F5R, FBR	27	36	55
E0R, EAR, F0S, F0Y, G0R E5R, EBR, F5S, F5Y, G5R	28	37	56
E0S, E0Y, M4R, G2R E5S, E5Y, M9R, G7R	29	38	57
M0R, M5R	31	40	59
S1R, S2R, S3R, S6R	–	43	62
M3R, M8R	44	53	72
V5R	49	58	77

● Emergency stop pushbuttons

Type	1NC	2NC (1NO+1NC)	2NO+2NC
AR22VSR	34	43	62
V0R, V4R	36	45	64
Q2R	36	45	–
V2R	38	47	66
V7R	59	68	87
VGE	61	65	–

● Emergency stop illuminated pushbuttons

Type	Without transformer		With transformer *	
	1NC	2NC (1NO+1NC)	1NC	2NC (1NO+1NC)
AR22VSL, VDL	48	57	94	103
V0L	49	58	95	104
VAL	50	59	96	105
V2L	51	60	97	106
VGF	66	70	–	–

Note: * 230V and over : +17grams

AR22 and DR22
Mass

■ Mass, gram

● Pilot lights

Type	Without transformer		With transformer		With
	Standard	Short-body	Standard *	Short-body	resistor unit
DR22D0L, K0L	18	23	70	68	32
E3L, E3P, F3M, F4M	19	24	71	69	33
F5M	20	25	72	70	34
E3M	21	26	73	71	35
E3N	23	28	75	73	37

Note: * 230V and over : +17grams

● Selector switches

Type	1NO (1NC)	2NO (2NC) (1NO+1NC)	2NO+2NC
AR22PR	30	39	58
PCR	–	39	58
WR	31	40	59
WCR	–	40	59
RR, PY, WY	32	41	60
RCR, PCY, WCY	–	41	60
RY	33	42	61
RCY	–	42	61
JR, JAR	56	65	83
JCR	–	65	83
JY	57	66	84
JCY	–	66	84

● Illuminated selector switches

Type	Without transformer			With transformer *	
	1NO (1NC)	2NO (2NC) (1NO+1NC)	2NO+2NC	1NO (1NC)	2NO (2NC) (1NO+1NC)
AR22PL	42	51	70	88	97
PP	43	52	71	89	98

Note: * 230V and over : +17grams

● Joy stick selector switches

• Screw terminal types

Type	1NO x2	(1NO+1NC) x2	1NO x4	(1NO+1NC) x4
AR22A2N, A7N	89	99	116	136
A0N, A5N	99	109	126	146
A1N, A6N	112	122	139	159

• Solder/tab terminal types

Type	(1NO+1NC) x2	(2NO+2NC) x2	(1NO+1NC) x4	(2NO+2NC) x4
AR22A2H, A7H	72	75	82	88
A0H, A5H	82	85	92	98
A1H, A6H	95	98	105	111

● Buzzers

Type	Without transformer	With transformer	With resistor unit
DR22B5	50	105	52
B8	53	108	55

■ Mass, gram

● Illuminated pushbuttons

Type	Without transformer			With transformer *	
	1NO (1NC)	2NO (2NC) (1NO+1NC)	2NO+2NC	1NO (1NC)	2NO (2NC) (1NO+1NC)
AR30E0L	49	58	77	95	104
E5L	49	58	–	95	104
G4L	50	59	78	96	105
G9L	50	59	–	96	105
V5L	56	65	–	102	111
G2L	66	75	94	112	121
G7L	66	75	–	112	121
G3L	72	81	100	118	127
G8L	72	81	–	118	127
Q7L	–	159	–	–	205

Note: * 230V and over : +17grams

● Pushbuttons

Type	1NO (1NC)	2NO (2NC) (1NO+1NC)	2NO+2NC
AR30F0R, FAR, F5R, FBR	36	45	64
E0R, EAR, G0R, E5R, EBR, G5R	37	46	65
M4R	38	47	66
M0R, M5R	40	49	68
V5R	42	51	70
S1R, S2R, S3R, S6R	–	53	72
FVR	54	63	82
G1R, G6R	59	68	87
N0R	96	105	124
GPR	116	125	144
GSR, B0R	123	132	151
M3R, M8R	126	135	154
B1R	241	250	269
B3R	279	288	307
B2R	291	300	319

● Emergency stop pushbuttons

Type	1NC	2NC (1NO+1NC)	2NO+2NC
AR30V0R	43	52	71
Q2R	45	54	–
V2R	46	55	74
V1R	60	69	88

● Emergency stop illuminated pushbuttons

Type	Without transformer		With transformer *	
	1NC	2NC (1NO+1NC)	1NC	2NC (1NO+1NC)
AR30V0L	57	66	103	112
V2L	59	68	105	114

Note: * 230V and over : +17grams

AR30 and DR30
Mass

■ Mass, gram

● Pilot lights

• Without transformer type, With transformer type, With resistor unit type

Type	Without transformer	With transformer		With
	Standard	Standard *1	Short-body	resistor unit
DR30D0L, K0L	28	80	78	42
E3L	29	81	79	43
F4M *2	32 (30)	84 (82)	–	46
F4N *2	34 (30)	86 (82)	–	48
M4M *2	37 (32)	88 (84)	–	50
D1L	94	164	–	111

Notes: *1 230V and over : +17grams
*2 ( ): Incandescent lamp

• With resistor type

Type	50V DC	110V DC 220V DC
DR30D0L, K0L (LED)	103	103
D0L, K0L (incandescent)	107	–

C1

● Selector switches

Type	1NO (1NC)	2NO (2NC) (1NO+1NC)	2NO+2NC
AR30PR, WR	41	50	69
PCR, WCR	–	50	69
JR, JAR	67	76	94
JCR	–	76	94
HR	125	135	153(166)

Note: ( ) : AR30HR-122

● Illuminated selector switches

Type	Without transformer			With transformer *	
	1NO (1NC)	2NO (2NC) (1NO+1NC)	2NO+2NC	1NO (1NC)	2NO (2NC) (1NO+1NC)
AR30PL	52	61	80	98	107

Note: * 230V and over : +17grams

● Joy stick selector switches

• Screw terminal type

Type	1NO x2	(1NO+1NC) x2	1NO x4	(1NO+1NC) x4
AR30A2N, A7N	100	110	127	147
A0N, A5N	110	120	137	157
A1N, A6N	124	134	151	171

• Solder/tab terminal type

Type	(1NO+1NC) x2	(2NO+2NC) x2	(1NO+1NC) x4	(2NO+2NC) x4
AR30A2H, A7H	83	86	93	99
A0H, A5H	93	96	103	109
A1H, A6H	107	110	117	123

● Buzzers

Type	Without transformer	With transformer	With resistor unit
DR30B5, B6	47	102	49 (Except B6)
B8	48	103	50

AR16, DR16 and AF16, DF16
General information

- An integrated structure with built-in contacts that can reduce control panel depth.
- A wide variety of sockets are available to simplify wiring.

- Thin type and Standard types available for your control panel design. Select an optimum one to match your control panel design.

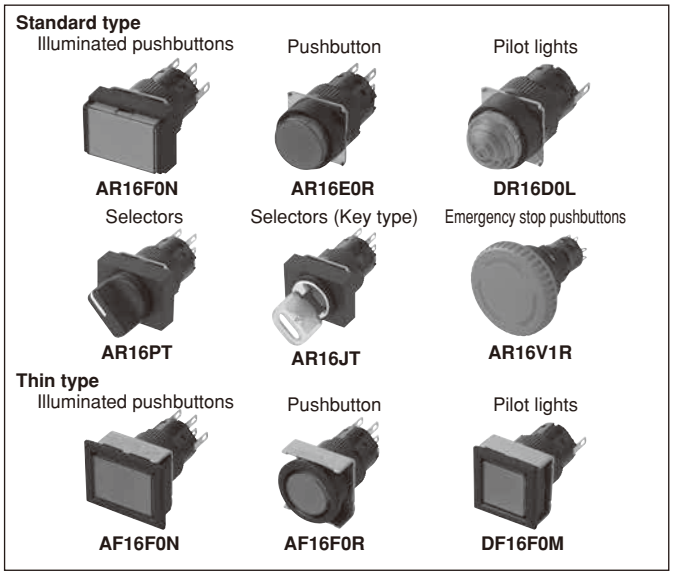

■ Features

Supporting smaller and thinner operator's panels

A structure that integrates operator and contacts to reduce panel-mounting depth. Terminals extending to the rear of the switch ensure easy wiring work.

- Standard type : 28.4mm deep
- Thin type : 35.9mm deep
- Emergency stop : 28mm deep

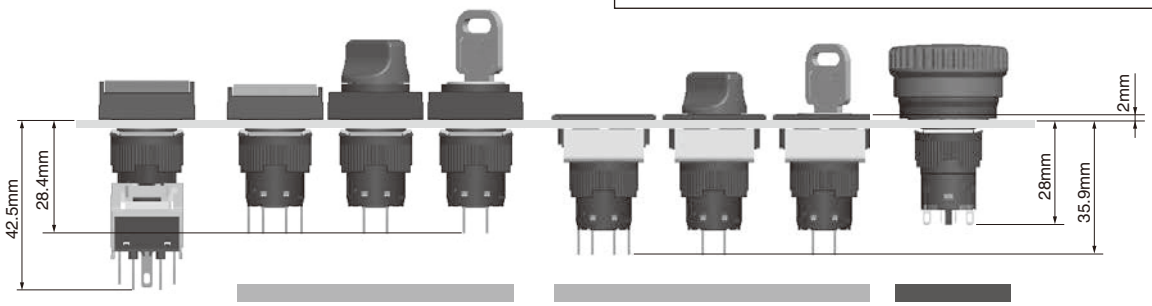

AH164, 5 series (Contact separated type) | AR16, DR16 series (Standard type) | AF16, DF16 series (Thin type) | AR16V series (Emergency stop pushbutton switches)

A wide variety of sockets reduce wiring work

Switches combine with a variety of sockets to simplify wiring.

- Fast-connection socket

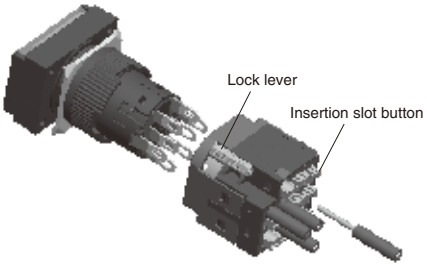

- Applicable as a fast-connection terminal switch by combining the socket with a switch.
- Easily wired by simply removing the wire sheath and inserting the wires while pressing the insertion slot button (no soldering required).
- Incorporates a branch terminal for easy branching.

- Connector socket

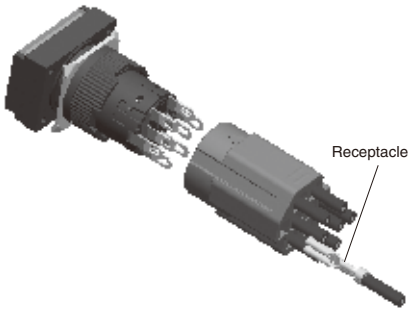

- Applicable as a connector by combining the socket with receptacles.
- The socket holds the receptacles, making it easy to connect the receptacle to the switch with a single operation.

- Socket for PC board

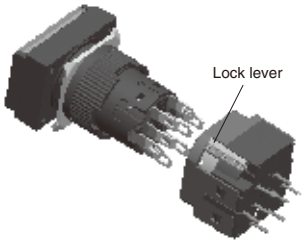

- Applicable as a switch for PC board by combining the socket with a switch.
- Pattern wiring reduces the number of wiring man-hour and helps prevent faulty wiring.

Safety

- FUJI's original Trigger Action mechanism is used in the emergency stop pushbuttons. They are suitable for emergency stop and safety. This mechanism prevents the contacts from moving untill the button in pushed and locked. (See page C1-180)

Degree of protection

The operator has IP65 protection for smooth operation without advere effects from oil, water, or dusts.

Approvals

For further information related to approved type, see page C1-134 to C1-139

Note : commanded switches shipped as aeticiles to China must conform to the Product Quality Law. Check with your Fuji Electric representative.

AR16, DR16 and AF16, DF16
Quick reference guide

■ Illuminated pushbutton switches

Operator		Flush rectangular		Flush rectangular with guard		Flush square		Extended round		Flush round	
Operator action		Momentary	Alternate	Momentary	Alternate	Momentary	Alternate	Momentary	Alternate	Momentary	Alternate
Standard type	Type	**AR16F0N**	**AR16F5N**	**AR16G0N**	**AR16G5N**	**AR16F0M**	**AR16F5M**	**AR16E0L**	**AR16E5L**	–	–
	Appearance									–	
	See page	C1-147		C1-147		C1-147		C1-147			
	Bezel (mm)	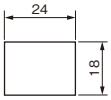		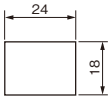						–	
	Panel cutting (mm)	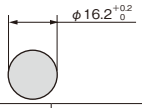									
Thin type	Type	**AF16F0N**	**AF16F5N**	–	–	**AF16F0M**	**AF16F5M**	–		**AF16F0L**	**AF16F5L**
	Appearance			–				–			
	See page	C1-159				C1-159				C1-159	
	Bezel (mm)	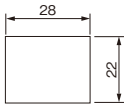		–		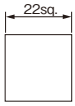		–		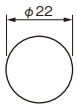	
	Panel cutting (mm)	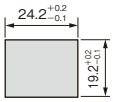		–		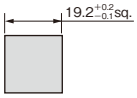		–		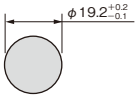	
Legend plate (mm)		19.6×13.6		19.6×13.6		13.6sq.		ϕ13.6		ϕ13.6	
Bezel color		Black									
Button color (transparent)		Green, Red, White *1, Yellow, Orange, Blue									
LED lamp	Color	Green, Red, Orange, Yellow, Amber, Blue									
	Lamp voltage	6V AC/DC, 12V AC/DC, 24V AC/DC									
Contact arrangement		SPDT, 2PDT									
Contact rating		120V AC 1A (AC-13), 24V DC 0.7A (DC-13, $T_{0.95}$ = 21ms) 240V AC 0.7A (AC-13), 125V DC 0.15A (DC-13, $T_{0.95}$ = 21ms)									
Mechanical durability		Momentary action: 1 million operations Alternate action: 250,000 operations									
Electrical durability		100,000 operations (220V AC 0.7A)									
Degree of protection (Operator)		IP65									
Type of terminal		Tab (#110) / solder dual-use terminal									
Accessories	Protective cover *2	○ *3		–		○ *3		○		–	
	Dust-proof cover	○ *4		–		○ *4		○		–	
	Terminal cover	○		○		○		○		○	
	Socket: Quick connection	○		○		○		○		○	
	Socket: Connector use	○		○		○		○		○	
	Socket: PC board use	○		○		○		○		○	
	Panel plug	○		○		○		○		○	

Notes: *1 A combination of the translucent button and the white legend plate comes to white.
*2 The protective cover and button of the thin type are made of an integral structure.
*3 The protective cover of the thin type is available for momentary action only.
*4 Available for standard type only.

■ Pushbutton switches

Operator		Flush rectangular		Flush rectangular with guard		Flush square		Extended round		Flush round	
Operator action		Momentary	Alternate	Momentary	Alternate	Momentary	Alternate	Momentary	Alternate	Momentary	Alternate
Standard type	Type	**AR16F0T**	**AR16F5T**	**AR16G0T**	**AR16G5T**	**AR16F0S**	**AR16F5S**	**AR16E0R**	**AR16E5R**	–	–
	Appearance									–	
	See page	C1-149		C1-149		C1-149		C1-149			
	Bezel (mm)	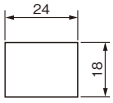		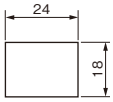						–	
	Panel cutting (mm)	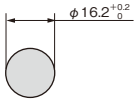									
Thin type	Type	**AF16F0T**	**AF16F5T**	–	–	**AF16F0S**	**AF16F5S**	–		**AF16F0R**	**AF16F5R**
	Appearance			–				–			
	See page	C1-161				C1-161				C1-161	
	Bezel (mm)	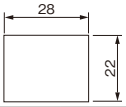		–		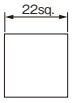		–		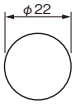	
	Panel cutting (mm)	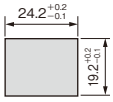		–		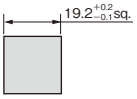		–		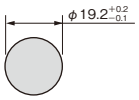	
Legend plate (mm)		19.6×13.6		19.6×13.6		13.6sq		ϕ13.6		ϕ13.6	
Button color (transparent)		Black									
Button color		Green, Red, Black [*1], White [*2], Yellow, Orange, Blue									
Contact arrangement		SPDT, 2PDT									
Contact rating		120V AC 1A (AC-13), 24V DC 0.7A (DC-13, $T_{0.95}$ = 21ms) 240V AC 0.7A (AC-13), 125V DC 0.15A (DC-13, $T_{0.95}$ = 21ms)									
Mechanical durability		Momentary action: 1 million operations Alternate action: 250,000 operations									
Electrical durability		100,000 operations (220V AC 0.7A)									
Degree of protection (Operator)		IP65									
Type of terminal		Tab (#110) / solder dual-use terminal									
Accessories	Protective cover [*3]	○ [*4]		–		○ [*4]		○		–	
	Dust-proof cover	○ [*5]		–		○ [*5]		○		–	
	Terminal cover	○		○		○		○		○	
	Socket: Quick connection	○		○		○		○		○	
	Socket: Connector use	○		○		○		○		○	
	Socket: PC board use	○		○		○		○		○	
	Panel plug	○		○		○		○		○	

Notes: [*1] A combination of the translucent button and the black legend plate comes to black button.
[*2] A combination of the translucent button and the white legend plate comes to white button.
[*3] The protective cover and button of the thin type are made of an integral structure.
[*4] The protective cover of the thin type is available for momentary action only.
[*5] Available for standard type only.

AR16, DR16 and AF16, DF16
Quick reference guide

■ Pilot lights

Lens shape			Flush rectangular	Flush square	Extended round	Flush round	Dome
Standard type	Type		**DR16F0N**	**DR16F0M**	**DR16E0L**	–	**DR16D0L**
	Appearance					–	
	See page		C1-151	C1-151	C1-151		C1-151
	Bezel (mm)		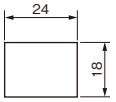			–	
	Panel cutting (mm)		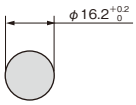				
Thin type	Type		**DF16F0N**	**DF16F0M**	–	**DF16F0L**	–
	Appearance				–		–
	See page		C1-163	C1-163		C1-163	
	Bezel (mm)		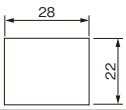	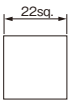	–	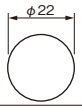	–
	Panel cutting (mm)		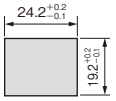	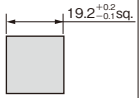	–	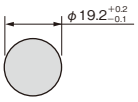	–
Legend plate (mm)			19.6×13.6	13.6sq	ϕ13.6	ϕ13.6	–
Bezel color			Black				
Button color (transparent)			Green, Red, White [*1], Yellow, Orange, Blue				
LED lamp	Color		Green, Red, Orange, Yellow, Amber, Blue				
	Lamp voltage		6V AC/DC, 12V AC/DC, 24V AC/DC				
Degree of protection (Lens)			IP65				
Type of terminal			Tab (#110) / solder dual-use terminal				
Accessories	Terminal cover		○	○	○	○	○
	Socket	Quick connection	○	○	○	○	○
		Connector use	○	○	○	○	○
		PC board use	○	○	○	○	○
	Panel plug		○	○	○	○	○

Note: [*1] A combination of the translucent lens and the white legend plate comes to white lens (except for dome type).

■ Selector switches (Knob type)

Operator			Knob with rectangular bezel	Knob with square bezel	Knob with round bezel
No. of position			2-position, 3-position	2-position, 3-position	2-position, 3-position
Operator action			Maintained, Spring/manual return, Spring return	Maintained, Spring/manual return, Spring return	Maintained, Spring/manual return, Spring return
Standard type	Type		**AR16PT**	**AR16PS**	**AR16PR**
	Appearance				
	See page		C1-153	C1-153	C1-153
	Bezel (mm)		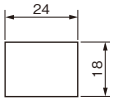		
	Panel cutting (mm)		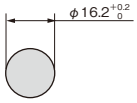		
Thin type	Type		**AF16PT**	**AF16PS**	**AF16PR**
	Appearance				
	See page		C1-165	C1-165	C1-165
	Bezel (mm)		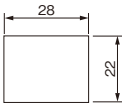	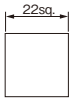	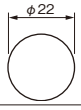
	Panel cutting (mm)		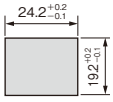	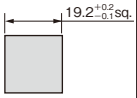	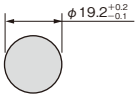
Bezel color			Black		
Color of knob			Black		
Contact arrangement			SPDT, 2PDT		
Contact rating			120V AC 1A (AC-13), 24V DC 0.7A (DC-13, $T_{0.95}$ = 21ms) 240V AC 0.7A (AC-13), 125V DC 0.15A (DC-13, $T_{0.95}$ = 21ms)		
Mechanical durability			250,000 operations		
Electrical durability			100,000 operations (220V AC 0.7A)		
Degree of protection (Operator)			IP65		
Type of terminal			Tab (#110) / solder dual-use terminal		
Accessories	Terminal cover		○	○	○
	Socket	Quick connection	○	○	○
		Connector use	○	○	○
		PC board use	○	○	○
	Panel plug		○	○	○

AR16, DR16 and AF16, DF16
Quick reference guide

■ Selector switches (Key type)

Operator		Key with rectangular bezel	Key with square bezel	Key with round bezel
No. of position		2-position, 3-position	2-position, 3-position	2-position, 3-position
Operator action		Maintained, Spring/manual return, Spring return	Maintained, Spring/manual return, Spring return	Maintained, Spring/manual return, Spring return
Standard type	Type	**AR16JT**	**AR16JS**	**AR16JR**
	Appearance			
	See page	C1-156	C1-156	C1-156
	Bezel (mm)	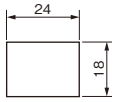		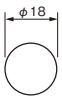
	Panel cutting (mm)	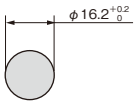		
Thin type	Type	**AF16JT**	**AF16JS**	**AF16JR**
	Appearance			
	See page	C1-168	C1-168	C1-168
	Bezel (mm)	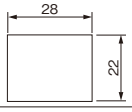	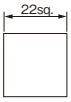	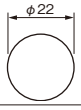
	Panel cutting (mm)	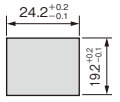	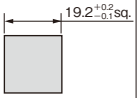	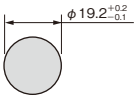
Bezel color		Black		
Key removable position		Left (A), Left/Right (B), Left/Center/Right (C), Right (D), Center (E), Center/Right (F), Left/Center (G)		
No. of key types		6 (A, B, C, D, E, F)		
Contact arrangement		SPDT, 2PDT		
Contact rating		120V AC 1A (AC-13), 24V DC 0.7A (DC-13, $T_{0.95}$ = 21ms) 240V AC 0.7A (AC-13), 125V DC 0.15A (DC-13, $T_{0.95}$ = 21ms)		
Mechanical durability		250,000 operations		
Electrical durability		100,000 operations (220V AC 0.7A)		
Degree of protection (Operator)		IP65		
Type of terminal		Tab (#110) / solder dual-use terminal		
Accessories	Terminal cover	○	○	○
	Socket: Quick connection	○	○	○
	Socket: Connector use	○	○	○
	Socket: PC board use	○	○	○
	Panel plug	○	○	○

■ Emergency stop pushbutton switches

Operator		Illuminated push-lock (32mm dia)	Illuminated push-lock (40mm dia)	Push-lock (32mm dia)	Push-lock (40mm dia)
Operator action		Turn reset or pull-reset		Turn reset or pull-reset	
Type		**AR16V0L**	**AR16V1L**	**AR16V0R**	**AR16V1R**
Appearance					
See page		C1-186	C1-186	C1-186	C1-186
Button size (mm)				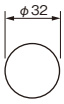	
Panel cutting (mm)		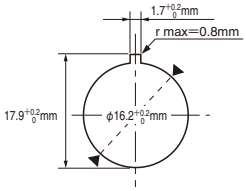			
Button color		Red			
LED lamp	Color	Red		—	
	Lamp voltage	6V AC/DC, 12V AC/DC, 24V AC/DC		—	
Contact arrangement		1NC, 1NO+1NC, 2NC, 1NO+2NC, 3NC, 1NO+3NC, 4NC			
Contact ratings		120V AC 0.3A (AC-15), 24V DC 0.7A (DC-13), 240V AC 0.3A (AC-15), 125V DC 0.15A (DC-13)			
Mechanical durability		100,000 operations			
Electrical durability		100,000 operations (AC-15, AC-13, AC-12, DC-13, DC-12)			
Degree of protection (Operator)		IP65			
Type of terminal		Solder use terminal			
Accessories	Terminal cover	○	○	○	○
	Name plate (Emergency stop)	○	○	○	○

AR16 and DR16, AF16 and DF16 Ratings and Specifications

■ Contact ratings

• **UL/CSA**

• AC (COSø = 0.35)

Contact rating code	120V		240V	
	Making current	Breaking current	Making current	Breaking current
D300	3.6A	0.6A	1.8A	0.3A

• **TÜV (EN60947-5-1), CCC (GB/T14048.5), JIS C 8201-5-1**

Type of switches	Conventional free air thermal current Ith	Rated operational current Ie				
		Rated operational voltage Ue	AC		DC	
			AC-13 (Inductive load)	AC-12 (Resistive load)	DC-13 (Inductive load)	DC-12 (Resistive load)
Illuminated pushbutton switch Pushbutton switch Selector switch	5A	24V	–	–	0.7A *1	1A
		120V	1A	1.5A	–	–
		125V	–	–	0.15A *1	0.2A
		240V	0.7A	1A	–	–

Note: *1 $T_{0.95}$=21ms

C1

■ Specifications (indoor use)

Item		• Illuminated pushbutton switch, pushbutton switch	• Selector switch	• Pilot lights
Rated insulation voltage Ui		250V AC/DC		
Durability	Mechanical	Momentary action: 1 million operations Alternate action: 250,000 operations	Maintained: 250,000 operations Spring/manual return: 250,000 operations Spring return: 250,000 operations	–
	Electrical	100,000 operations (at 220V AC 0.7A)		–
Operating frequency		1200 operations/hour (On-load factor: 40%)		–
Withstand voltage	Between live section and grounding	2000V AC, 1 minute		
	Between opposite polarity live sections	2000V AC, 1 minute		–
Insulation resistance		100MΩ or more (500V DC megger)		
Rated impulse withstand voltage Uimp		2.5kV		
Conditional short-circuit current		1000A		
Short-circuit protective device		gG 2A (IEC60269 Fuse)		
Pollution degree		3		
Vibration		Resonance: frequency 10 to 55Hz, double amplitude 1.0mm Constant: frequency 16.7Hz, double amplitude 3mm		
Shock		Malfunction durability; 100m/s^2 Mechanical durability; 500m/s^2		
Operational ambient temperature		–10 to +55°C (no icing or no condensation)		
Storage temperature		–40 to +70°C		
Relative humidity (inside control panel)		45 to 85%RH (–5 to + 40°C) (no icing or no condensation)		
Degree of protection of operating (displaying) section		IP65 (dust-proof, water jet proof): IEC 60529		
Degree of protection of terminal section		IP2X (Fast-connection socket: AR6S690, Connector socket: AR6S691-C or Terminal cover: AR2Y261, At the connection)		

■ Specifications (Socket)

Item	Fast-connection socket	Connector socket	Socket for PC board
Rated insulation voltage Ui	250V AC/DC		60V AC/DC
Conventional free air thermal current Ith	3A	5A	3A
Rated impulse withstand voltage Uimp	2.5kV		0.5kV
Withstand voltage (Between live section and grounding)	2000V AC, 1 minute		1000V AC, 1 minute
Insulation resistance	100MΩ or more (500V DC megger)		
Operational ambient temperature	-10 to +55°C (no icing or no condensation)		
Storage temperature	-40 to +70°C		
Relative humidity	45 to 85%RH (-5 to +40°C) (no icing or no condensation)		
Pollution degree	3		

■ Degree of protection

• The table below shows the degree of protection stipulated by IEC (International Electrotechnical Commission) standard (IEC 60529).

IP– 6 5

Class	Degree of protection against human contact or penetration by a foreign object		Degree of protection against ingress of water	
5		• Normal operation secured even if the dust that can pass through screen of 75μm mesh invades.	Protection against water jets 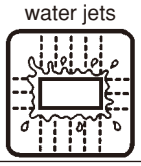	• Protected against water jet from all directions. • Water projected by nozzle (6.3mm-inner dia.) from all directions at 29.4kPa for 3min at a distance of 3m.
6		• The dust which can pass through screen of 75μm mesh shall not invade.	Protection against powerful water 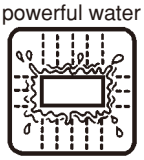	• Protected against powerful water jet from all directions. • Water projected by nozzle (12.5mm-inner dia.) from all directions at 98kPa for 3min at a distance of 3m.

■ Contact reliability

FUJI has confirmed that the product can be used in 1mA circuit conditions at 5V AC or DC. The operable range, however, may vary depending on the operational ambient conditions and type of load.

AR16 and DR16, AF16 and DF16 Specifications

■ Lamp ratings and current consumption

• Illuminated pushbutton switch, Pilot lights

Applied method	Lamp operational voltage	High-brightness LED lamp		
		Type	Lamp rated voltage	Current consumption
without transformer	6V AC/DC	**DR6L695-A□**	6V AC/DC	Green, Blue: 11mA AC, 7.5mA DC Red, Amber: 9mA AC, 7.5mA DC Orange: 10mA AC, 8.5mA DC Yellow: 30mA AC, 26mA DC
	12V AC/DC	**DR6L695-B□**	12V AC/DC	Green, Red, Amber, Blue: 7.5mA AC, 7.5mA DC Orange: 9mA AC, 8.5mA DC Yellow: 11mA AC, 8.5mA DC
	24V AC/DC	**DR6L695-E□**	24V AC/DC	Green, Red, Amber, Blue: 7.5mA AC, 7.5mA DC Orange, Yellow: 9mA AC, 8.5mA DC

Note: A box □ indicates the luminous color. For details, see the “Combination of Illuminated pushbutton / pilot light color and LED lamp luminous color”.

■ Combination of Illuminated pushbutton / pilot light color and LED lamp luminous color

Illuminated pushbutton / pilot light color (lens color)		Luminous color of high-brightness LED lamp	
	Type		Type
Green	G	Green	**DR6L695-■G**
Red	R	Red	**DR6L695-■R**
White	W	Orange	**DR6L695-■W**
Yellow	Y	Yellow	**DR6L695-■Y**
Orange	A	Amber	**DR6L695-■A**
Blue	S	Blue	**DR6L695-■S**

Note: *1 A box ■ indicates the lamp operational voltage. For details, see the “Lamp ratings and current consumption”.

■ LED durability

Type of lamp	Durability (reference)	Judgment criterion
LED lamp	Approx. 30000h	When the brightness is less than 50% of initial value.

Note: The durability of LED lamp is a mean value in all colors.

■ Standard approved

UL508	cUL File No.E44592
CSA C22.2 No.14	
TÜV: EN60947-5-1	Pushbutton, Illuminated pushbutton: R50116757 Selector: R50116759 Pilot lights: R50116762
CCC: GB/T14048.5	Switches (except pilot ligths): 2003010305071068 Pilot lights: 2003010305071044

■ Standard models approved by international standards

The standard models of AR16 and DR16, AF16 and DF16 series of the ø16 Command Switches meet UL / CSA requirements, China Compulsory Certification (CCC) standards, and TÜV EN standards, thus ensuring easier direct or indirect export to North America and European countries with no safety standard concerns.

AR16 and DR16, AF16 and DF16
Type number nomenclature

• **Illuminated pushbutton switches**

AR16 F0N – C2 E3 G

Product category

Category	Code
Standard type	**AR16**
Thin type	**AF16**

Operator shape and action

Operator shape	Code			
	Standard type		Thin type	
	Momentary	Alternate	Momentary	Alternate
Flush rectangular	**F0N**	**F5N**	**F0N**	**F5N**
Flush rectangular with guard	**G0N**	**G5N**	**–**	**–**
Flush square	**F0M**	**F5M**	**F0M**	**F5M**
Extended round	**E0L**	**E5L**	**–**	**–**
Flush round	**–**	**–**	**F0L**	**F5L**

Contact arrangement and terminal

Contact arrangement	Code	Type of terminal
SPDT	**C1**	Tab (#110) and solder dual-use terminal
2PDT	**C2**	

Color of button

Color	LED color	Code
Green	Green	**G**
Red	Red	**R**
White *1	Orange	**W**
Yellow	Yellow	**Y**
Orange	Amber	**A**
Blue	Blue	**S**

Note: • The button is transparent in color.
*1: A combination of the transparent lens and the white legend plate comes to white.

Lamp operational voltage and light source

Applied method	Voltage	Code
		LED
Without transformer	6V AC/DC	**A3**
	12V AC/DC	**B3**
	24V AC/DC	**E3**

• **Pushbutton switches**

AR16 F0T – C2 R

Product category

Category	Code
Standard type	**AR16**
Thin type	**AF16**

Operator shape and action

Operator shape	Code			
	Standard type		Thin type	
	Momentary	Alternate	Momentary	Alternate
Flush rectangular	**F0T**	**F5T**	**F0T**	**F5T**
Flush rectangular with guard	**G0T**	**G5T**	**–**	**–**
Flush square	**F0S**	**F5S**	**F0S**	**F5S**
Extended round	**E0R**	**E5R**	**–**	**–**
Flush round	**–**	**–**	**F0R**	**F5R**

Contact arrangement and terminal

Contact arrangement	Code	Type of terminal
SPDT	**C1**	Tab (#110) and solder dual-use terminal
2PDT	**C2**	

Color of button

Color	Code
Green	**G**
Red	**R**
Black *1	**B**
White *2	**W**
Yellow	**Y**
Orange	**A**
Blue	**S**

Notes: • The button is transparent in color.
*1: A combination of the transparent button and the black legend plate comes to black.
*2: A combination of the transparent button and the white legend plate comes to white.

Note: The manufacturing range varies depending on the model. For details, see "Types and dimensions" of this catalog.

AR16 and DR16, AF16 and DF16
Type number nomenclature

• **Pilot lights**

DR16 D0L – E3 W

Product category

Category	Code
Standard type	**DR16**
Thin type	**DF16**

Lens shape

Lens shape	Code	
	Standard type	Thin type
Flush rectangular	**F0N**	**F0N**
Flush square	**F0M**	**F0M**
Extended round	**E0L**	**–**
Flush round	**–**	**F0L**
Dome	**D0L**	**–**

Color of lens

Color	LED color	Code
Green	Green	**G**
Red	Red	**R**
White *1	Orange	**W**
Yellow	Yellow	**Y**
Orange	Amber	**A**
Blue	Blue	**S**

Note: • The lens is transparent in color.
*1 : A combination of the transparent lens and the white legend plate comes to white (except for dome type).

Lamp operational voltage and light source

Applied method	Voltage	Code
		LED
Without transformer	6V AC/DC	**A3**
	12V AC/DC	**B3**
	24V AC/DC	**E3**

Note: The terminal used is a tab (#110) and solder dual-use terminal.

Note: The manufacturing range varies depending on the model. For details, see “Types and dimensions” of this catalog.

AR16 and DR16, AF16 and DF16
Type number nomenclature

• **Selector switches (Knob type)**

AR16 PT−2 C1 B

Product category

Category	Code
Standard type	**AR16**
Thin type	**AF16**

Operator shape

Operator shape	Code
Knob with rectangular bezel	**PT**
Knob with square bezel	**PS**
Knob with round bezel	**PR**

Color of knob

Color	Code
Black	**B**

Contact arrangement and terminal

Contact arrangement	Code	Type of terminal
SPDT *1	**C1**	Tab (#110) and solder dual-use terminal
2PDT	**C2**	

Note: *1 2-position model only available

No. of positions and operator action

No. of positions	Operator action	Code
2-position (90°)	Maintained	**2**
	Spring return (Right to left)	**0**
3-position (45°)	Maintained	**3**
	Spring/manual return (Left to center)	**6**
	Spring/manual return (Right to center)	**7**
	Spring return (Left or right to center)	**1**

• **Key position and contact operation**

2-position

Operator action (View form the front)		Contact arrangement	Contact unit			Operator position *2	
2	0					1	2
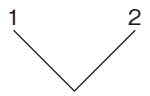 Maintained/90°	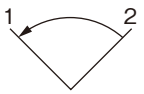 Spring return/90°	SPDT	Left	COM	NC	●	
					NO		●
		2PDT	Left	COM	NC	●	
					NO		●
			Right	COM	NC	●	
					NO		●

Terminal arrangement
View from the terminal side (the back)

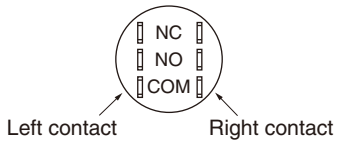

3-position

Operator action (View form the front)				Contact arrangement	Contact unit			Operator position *2		
3	6	7	1					1	2	3
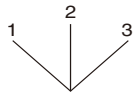 Maintained/each 45°	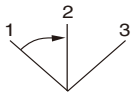 Spring/manual return/each 45°	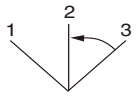 Spring/manual return/each 45°	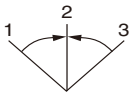 Spring return/each 45°	2PDT	Left	COM	NC	▬		
							NO			●
					Right	COM	NC		▬	
							NO	●		

Note: *2 ●, ▬: means the contact closed (ON).

AR16 and DR16, AF16 and DF16
Type number nomenclature

• Selector switches (Key type)

AR16 JT−3 E C2 A

Product category

Category	Code
Standard type	**AR16**
Thin type	**AF16**

Operator shape

Operator shape	Code
Key with rectangular bezel	**JT**
Key with square bezel	**JS**
Key with round bezel	**JR**

No. of positions and operator action

No. of positions	Operator action	Code
2-position (90°)	Maintained	**2**
	Spring return (Right to left)	**0**
3-position (45°)	Maintained	**3**
	Spring/manual return (Left to center)	**6**
	Spring/manual return (Right to center)	**7**
	Spring return (Left or right to center)	**1**

Key removable position

Key removable position	Applicable operator action 2	0	3	6	7	1	Code
Left	○	○	○	–	○	–	**A**
Left and right	○	–	○	–	–	–	**B**
Left, center and right	–	–	○	–	–	–	**C**
Right	○	–	○	○	–	–	**D**
Center	–	–	○	○	○	○	**E**
Center and right	–	–	○	○	–	–	**F**
Left and center	–	–	○	–	○	–	**G**

Types of key

Type [*1]	A	B	C	D	E	F
Code	**A**	**B**	**C**	**D**	**E**	**F**

Note: [*1] "A" is standard.

Contact arrangement and terminal

Contact arrangement	Code	Type of terminal
SPDT [*2]	**C1**	Tab (#110) and solder dual-use terminal
2PDT	**C2**	

Note: [*2] 2-position model only

• Key position and contact operation

2-position

Operator action (View form the front) 2	0	Contact arrangement	Contact unit			Operator position [*3] 1	2
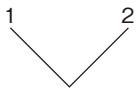 Maintained/90°	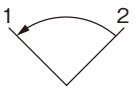 Spring return/90°	SPDT	Left	COM	NC	●	
					NO		●
		2PDT	Left	COM	NC	●	
					NO		●
			Right	COM	NC	●	
					NO		●

Terminal arrangement
View from the terminal side (the back)

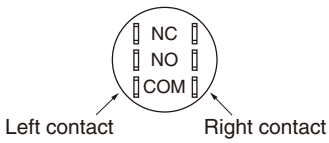

3-position

Operator action (View form the front) 3	6	7	1	Contact arrangement	Contact unit			Operator position [*3] 1	2	3
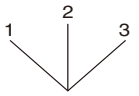 Maintained/each 45°	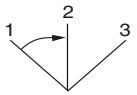 Spring/manual return/each 45°	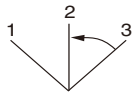 Spring/manual return/each 45°	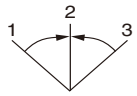 Spring return/each 45°	2PDT	Left	COM	NC	▬	▬	
							NO			●
					Right	COM	NC		▬	▬
							NO	●		

Note: [*3] ●, ▬: means the contact closed (ON).

1. Standard type, AR16 and DR16

■ Illuminated pushbutton switches (LED illuminated)

• Type number system

AR16 F0N – C2 E3 G

- AR16: Product category: Standard type
- F0N: Operator shape and action
- C2: Contact arrangement and terminal
- E3: Lamp operational voltage and light source
- G: Color of button

• Type

Operator	Appearance (Standard type)	Lamp operational voltage	Conntact arrangement	Momentary action Type	Alternate action Type
Flush rectangular	**AR16F0N, F5N**	6V AC/DC	SPDT	**AR16F0N-C1A3□**	**AR16F5N-C1A3□**
			2PDT	**AR16F0N-C2A3□**	**AR16F5N-C2A3□**
		12V AC/DC	SPDT	**AR16F0N-C1B3□**	**AR16F5N-C1B3□**
			2PDT	**AR16F0N-C2B3□**	**AR16F5N-C2B3□**
		24V AC/DC	SPDT	**AR16F0N-C1E3□**	**AR16F5N-C1E3□**
			2PDT	**AR16F0N-C2E3□**	**AR16F5N-C2E3□**
Flush rectangular with guard	**AR16G0N, G5N**	6V AC/DC	SPDT	**AR16G0N-C1A3□**	**AR16G5N-C1A3□**
			2PDT	**AR16G0N-C2A3□**	**AR16G5N-C2A3□**
		12V AC/DC	SPDT	**AR16G0N-C1B3□**	**AR16G5N-C1B3□**
			2PDT	**AR16G0N-C2B3□**	**AR16G5N-C2B3□**
		24V AC/DC	SPDT	**AR16G0N-C1E3□**	**AR16G5N-C1E3□**
			2PDT	**AR16G0N-C2E3□**	**AR16G5N-C2E3□**
Flush square	**AR16F0M, F5M**	6V AC/DC	SPDT	**AR16F0M-C1A3□**	**AR16F5M-C1A3□**
			2PDT	**AR16F0M-C2A3□**	**AR16F5M-C2A3□**
		12V AC/DC	SPDT	**AR16F0M-C1B3□**	**AR16F5M-C1B3□**
			2PDT	**AR16F0M-C2B3□**	**AR16F5M-C2B3□**
		24V AC/DC	SPDT	**AR16F0M-C1E3□**	**AR16F5M-C1E3□**
			2PDT	**AR16F0M-C2E3□**	**AR16F5M-C2E3□**
Extended round	**AF16E0L, E5L**	6V AC/DC	SPDT	**AR16E0L-C1A3□**	**AR16E5L-C1A3□**
			2PDT	**AR16E0L-C2A3□**	**AR16E5L-C2A3□**
		12V AC/DC	SPDT	**AR16E0L-C1B3□**	**AR16E5L-C1B3□**
			2PDT	**AR16E0L-C2B3□**	**AR16E5L-C2B3□**
		24V AC/DC	SPDT	**AR16E0L-C1E3□**	**AR16E5L-C1E3□**
			2PDT	**AR16E0L-C2E3□**	**AR16E5L-C2E3□**

Note: • See page C1-148 for the outline dimensions.

• Button color

Replace the □ mark by the color code

Color	Green	Red	White	Yellow	Orange	Blue
Code	G	R	W *1	Y	A	S

Note: *1 A combination of the transparent button and the white legend plate comes to white.

AR16 and DR16
Type numbers and dimensions

• **Dimensions, mm**

Flush rectangular
AR16F0N, F5N

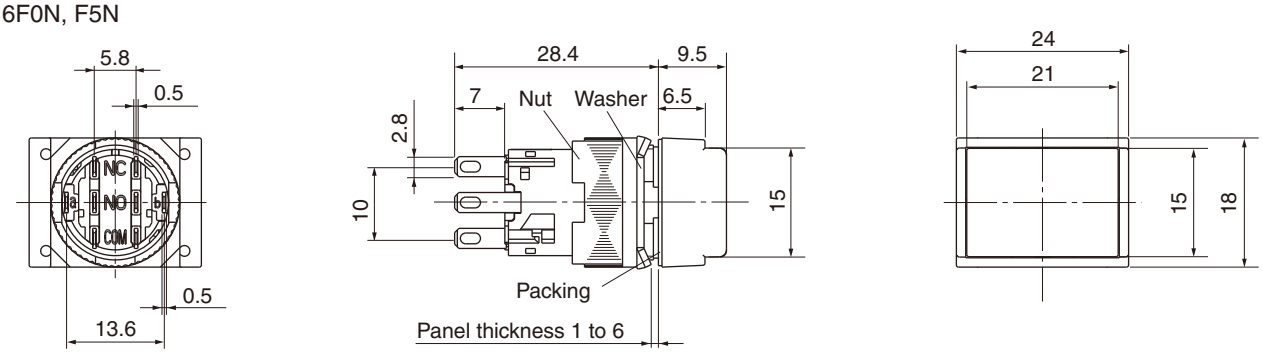

Flush rectangular with guard
AR16G0N, G5N

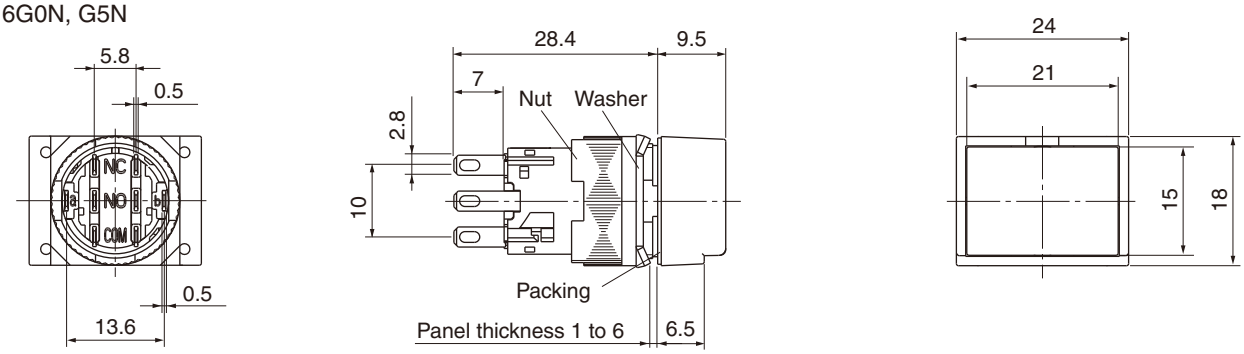

Flush square
AR16F0M, F5M

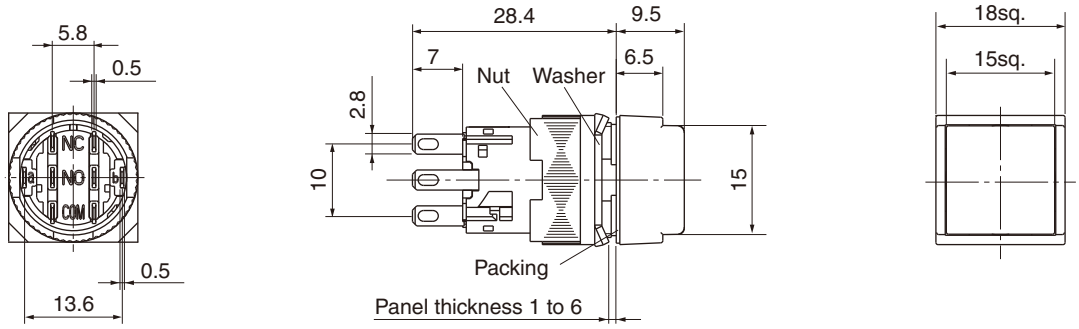

Extended round
AR16E0L, E5L

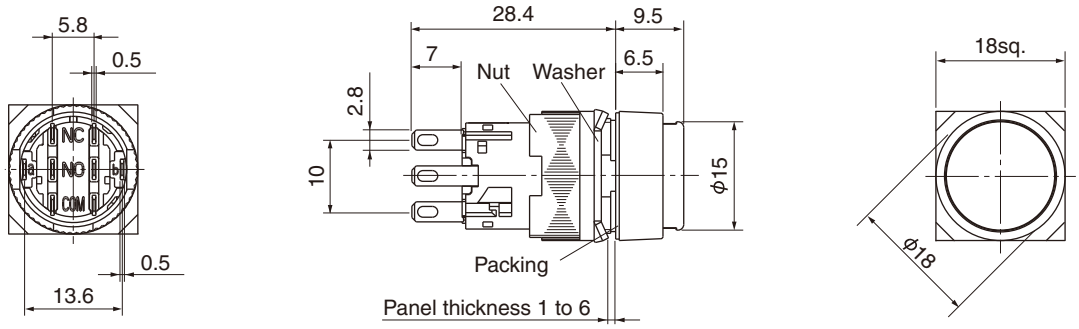

■ Pushbutton switches

• Type number system

AR16 F0T – C2 G

- AR16: Product category: Standard type
- F0T: Operator shape and action
- C2: Contact arrangement and terminal
- G: Color of button

• Type

Operator	Appearance (Standard type)	Conntact arrangement	Momentary action Type	Alternate action Type
Flush rectangular	**AR16F0T, F5T**	SPDT	**AR16F0T-C1□**	**AR16F5T-C1□**
		2PDT	**AR16F0T-C2□**	**AR16F5T-C2□**
Flush rectangular with guard	**AR16G0T, G5T**	SPDT	**AR16G0T-C1□**	**AR16G5T-C1□**
		2PDT	**AR16G0T-C2□**	**AR16G5T-C2□**
Flush square	**AR16F0S, F5S**	SPDT	**AR16F0S-C1□**	**AR16F5S-C1□**
		2PDT	**AR16F0S-C2□**	**AR16F5S-C2□**
Extended round	**AR16E0R, E5R**	SPDT	**AR16E0R-C1□**	**AR16E5R-C1□**
		2PDT	**AR16E0R-C2□**	**AR16E5R-C2□**

Note: • See page C1-150 for the outline dimensions.

• Button color

Replace the □ mark by the color code

Color	Green	Red	Black	White	Yellow	Orange	Blue
Code	G	R	B *1	W *2	Y	A	S

Notes: *1 A combination of the transparent button and the black legend plate comes to black.
*2 A combination of the transparent button and the white legend plate comes to white.

AR16 and DR16
Type numbers and dimensions

• **Dimensions, mm**

Flush rectangular
AR16F0T, F5T

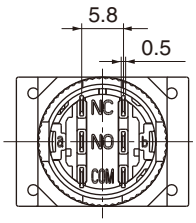

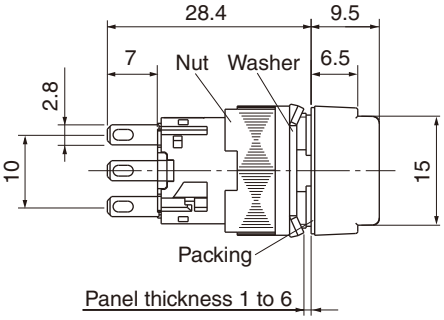

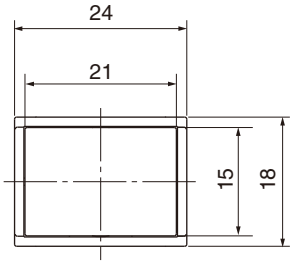

Flush rectangular with guard
AR16G0T, G5T

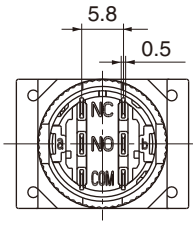

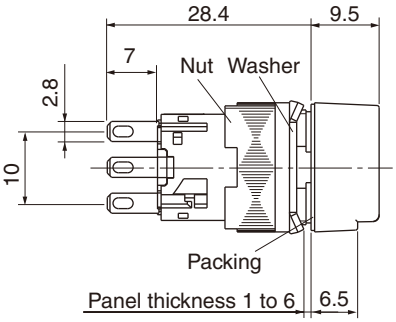

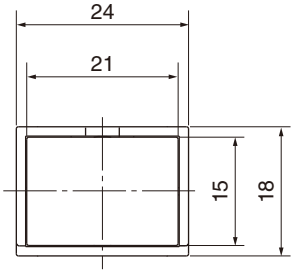

Flush square
AR16F0S, F5S

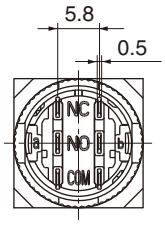

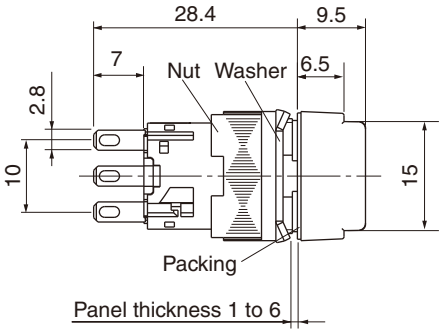

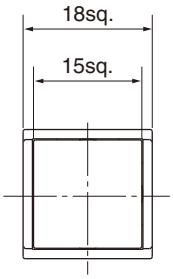

Extended round
AR16E0R, E5R

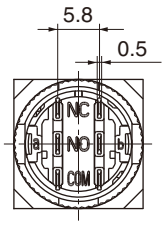

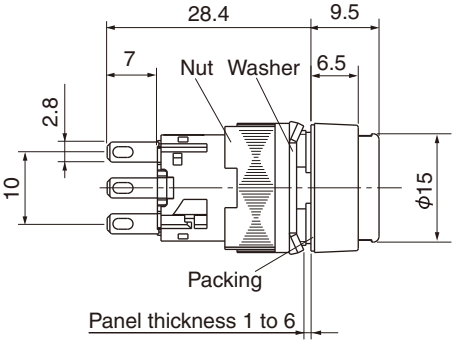

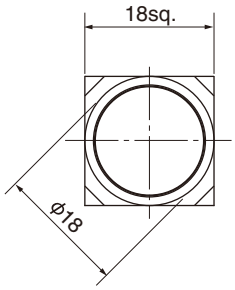

■ Pilot lights (LED illuminated)

• Type number system

DR16 D0L – E3 W

- Product category: Standard type — DR16
- Lens shape — D0L
- Lamp operational voltage and light source — E3
- Color of lens — W

• Type

Lens	Appearance (Standard type)	LED lamp operational voltage	Type
Flush rectangular	**DR16F0N**	6V AC/DC	**DR16F0N-A3□**
		12V AC/DC	**DR16F0N-B3□**
		24V AC/DC	**DR16F0N-E3□**
Flush square	**DR16F0M**	6V AC/DC	**DR16F0M-A3□**
		12V AC/DC	**DR16F0M-B3□**
		24V AC/DC	**DR16F0M-E3□**
Extended round	**DR16E0L**	6V AC/DC	**DR16E0L-A3□**
		12V AC/DC	**DR16E0L-B3□**
		24V AC/DC	**DR16E0L-E3□**
Dome	**DR16D0L**	6V AC/DC	**DR16D0L-A3□**
		12V AC/DC	**DR16D0L-B3□**
		24V AC/DC	**DR16D0L-E3□**

Note: • See page C1-152 for the outline dimensions.

• Lens color

Replace the □ mark by the color code

Color	Green	Red	White	Yellow	Orange	Blue
Code	G	R	W *1	Y	A	S

Note: *1 A combination of the transparent lens and the white legend plate comes to white (except for dome type).

AR16 and DR16
Type numbers and dimensions

• **Dimensions, mm**

Flush rectangular
DR16F0N

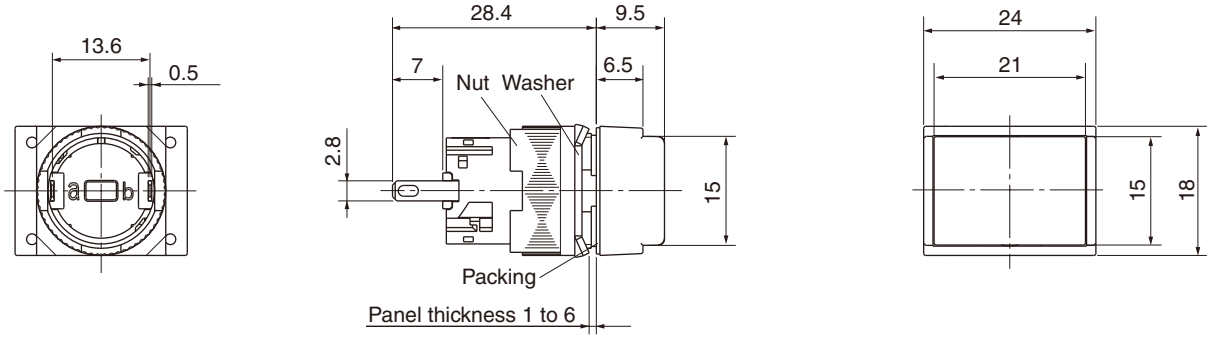

Flush square
DR16F0M

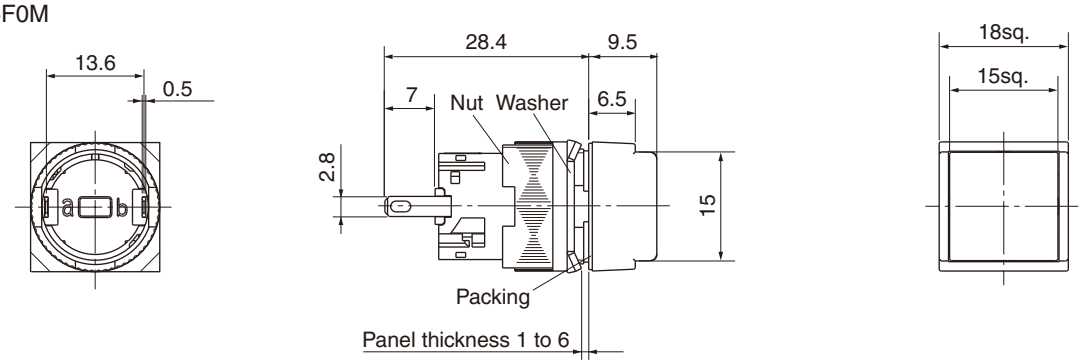

Extended round
DR16E0L

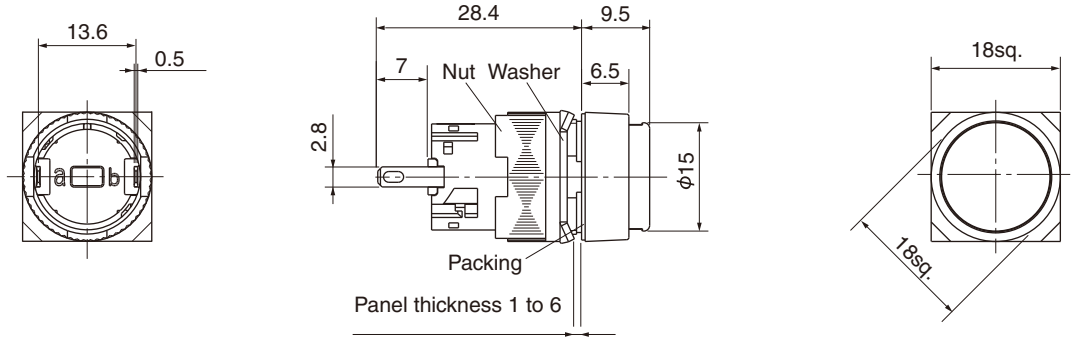

Dome
DR16D0L

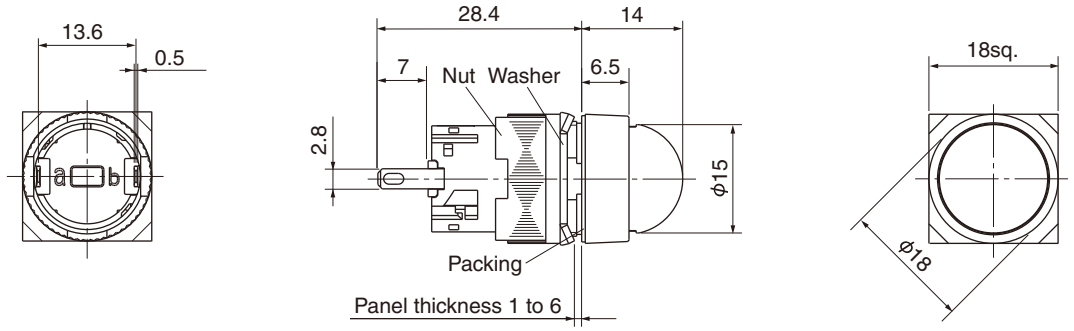

■ Selector switches (Knob type)

• Type number system

AR16 PT – 2 C2 B

- Product category: Standard type
- Operator shape
- No. of positions and operator action
- Contact arrangement and terminal
- Color of knob: Black

• Type

2-position

Operator and appearance (Standard type)	No. of positions	Contact arrangement	Type: Maintained/90° (1–2)	Type: Spring return/90° (1–2)	Contact operation: Contact unit *1		Operator position *2: 1	Operator position *2: 2
Knob with rectangular bezel/**AR16PT**	2-position	SPDT	**AR16PT-2C1B**	**AR16PT-0C1B**	Left	COM–NC	●	
			AR16PS-2C1B	**AR16PS-0C1B**		COM–NO		●
			AR16PR-2C1B	**AR16PR-0C1B**				
Knob with square bezel/**AR16PS**		2PDT	**AR16PT-2C2B**	**AR16PT-0C2B**	Left	COM–NC	●	
			AR16PS-2C2B	**AR16PS-0C2B**		COM–NO		●
Knob with round bezel/**AR16PR**			**AR16PR-2C2B**	**AR16PR-0C2B**	Right	COM–NC	●	
						COM–NO		●

Note: *1 Terminal arrangement of contact (View from the terminal side (the back)).

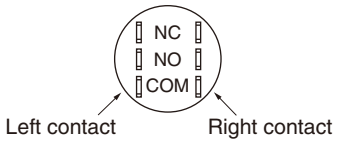

*2 ●: Means the contact closed (ON).

• See page C1-155 for the outline dimensions.

AR16 and DR16
Type numbers and dimensions

3-position

Operator and appearance (Standard type)	No. of positions	Contact arrangement	Type		Contact operation		
			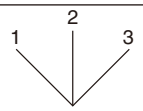 Maintained/each 45°	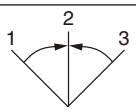 Spring return/each 45°	Contact unit *1		Operator position *2 (1 2 3)
Knob with rectangular bezel/**AR16PT**	3-position	2PDT	**AR16PT-3C2B**	**AR16PT-1C2B**	Left	COM: NC	▬
			AR16PS-3C2B	**AR16PS-1C2B**		COM: NO	●
Knob with square bezel/**AR16PS**			**AR16PR-3C2B**	**AR16PR-1C2B**	Right	COM: NC	▬
						COM: NO	●
			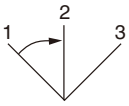 Spring/manual return/each 45°	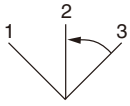 Spring/manual return/each 45°	Contact unit *1		Operator position *2 (1 2 3)
Knob with round bezel/**AR16PR**			**AR16PT-6C2B**	**AR16PT-7C2B**	Left	COM: NC	▬
			AR16PS-6C2B	**AR16PS-7C2B**		COM: NO	●
			AR16PR-6C2B	**AR16PR-7C2B**	Right	COM: NC	▬
						COM: NO	●

Notes: *1 Terminal arrangement of contact (View from the terminal side (the back)).

Left contact Right contact

*2 ●, ▬: means the contact closed (ON).

• See page C1-155 for the outline dimensions.

Fuji Electric FA Components & Systems Co., Ltd.
Information subject to change without notice

• **Dimensions, mm**

Knob with rectangular bezel
AR16PT

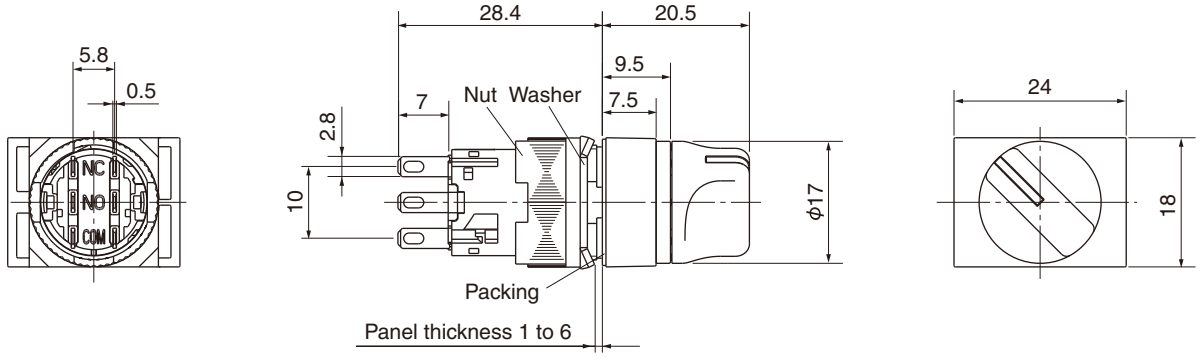

Knob with square bezel
AF16PS

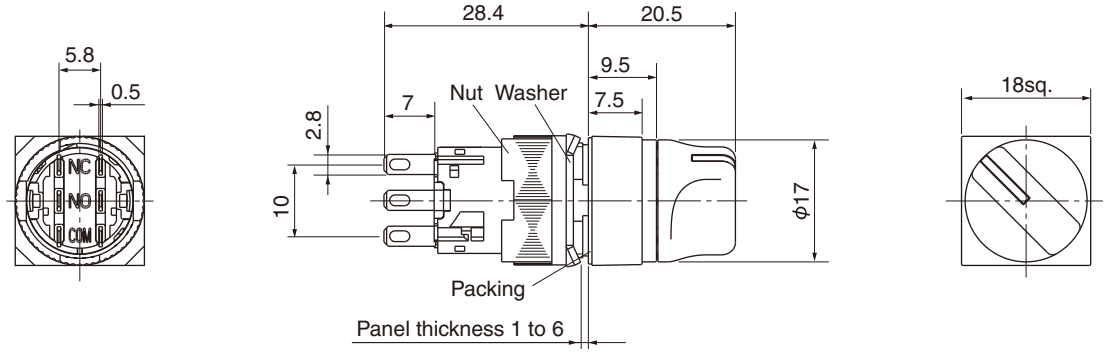

Knob with round bezel
AF16PR

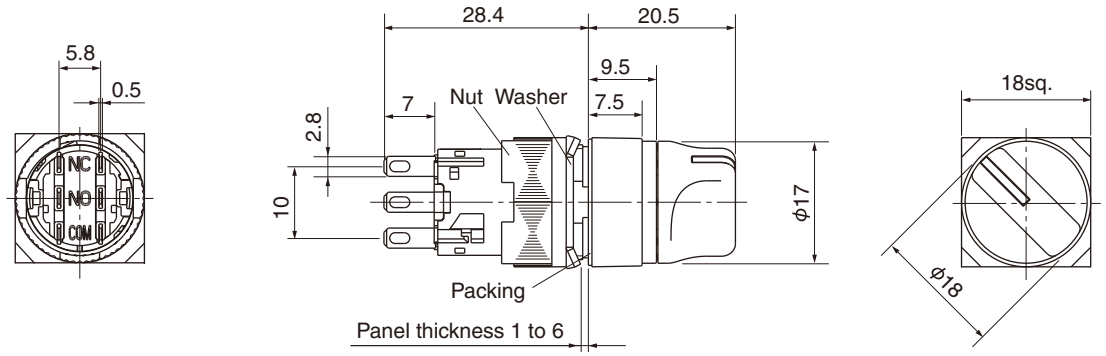

AR16 and DR16
Type numbers and dimensions

■ Selector switches (Key type)

• Type number system

AR16 JT – 2 B C2 A

- Product category: Standard type
- Operator shape
- No. of positions and operator action
- Key removable position
- Contact arrangement and terminal
- Type of key

• Type

2-position

Operator and appearance (Standard type)	No. of positions	Contact arrangement	Type: Maintained/90° (1 – 2)	Type: Spring return/90° (1 – 2)	Contact operation: Contact unit *1		Operator position *2: 1	Operator position *2: 2
Key with rectangular bezel/**AR16JT**	2-position	SPDT	**AR16JT-2■C1A**	**AR16JT-0AC1A**	Left	COM – NC	●	
			AR16JS-2■C1A	**AR16JS-0AC1A**		COM – NO		●
			AR16JR-2■C1A	**AR16JR-0AC1A**				
Key with square bezel/**AR16JS**		2PDT	**AR16JT-2■C2A**	**AR16JT-0AC2A**	Left	COM – NC	●	
			AR16JS-2■C2A	**AR16JS-0AC2A**		COM – NO		●
Key with round bezel/**AR16JR**			**AR16JR-2■C2A**	**AR16JR-0AC2A**	Right	COM – NC	●	
						COM – NO		●

Notes: *1 Terminal arrangement of contact (View from the terminal side (the back)).

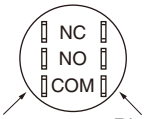

Left contact Right contact

*2 ●: Means the contact closed (ON).

• See page C1-158 for the outline dimensions.

• Key removable position

Specify the key removal position in the square ■ mark.

Key removable position	Applied operator action: 2	Applied operator action: 0	Code
Left ⦸	○	○	**A**
Left•Right ⊗	○	–	**B**
Left ⊘	○	–	**D**

○: Available –: Not available

• Type of key

Type *1	A	B	C	D	E	F
Code	**A**	**B**	**C**	**D**	**E**	**F**

*1 "A" is standard.

Fuji Electric FA Components & Systems Co., Ltd.
Information subject to change without notice

3-position

Operator and appearance (Standard type)	No. of positions	Contact arrangement	Type: Maintained/each 45°	Type: Spring return/each 45°	Contact operation: Contact unit *1		Operator position *2 (1 / 2 / 3)
Key with rectangular bezel/**AR16JT**	3-position	2PDT	**AR16JT-3■C2A**	**AR16JT-1EC2A**	Left	COM – NC	▬
			AR16JS-3■C2A	**AR16JS-1EC2A**	Left	COM – NO	●
Key with square bezel/ **AR16JS**			**AR16JR-3■C2A**	**AR16JR-1EC2A**	Right	COM – NC	▬
					Right	COM – NO	●
			Spring/manual return/each 45°	Spring/manual return/each 45°	Contact unit *1		Operator position *2 (1 / 2 / 3)
Key with round bezel/ **AR16JR**			**AR16JT-6■C2A**	**AR16JT-7■C2A**	Left	COM – NC	▬
			AR16JS-6■C2A	**AR16JS-7■C2A**	Left	COM – NO	●
			AR16JR-6■C2A	**AR16JR-7■C2A**	Right	COM – NC	▬
					Right	COM – NO	●

Notes: *1 Terminal arrangement of contact (View form the terminal side (the back)).

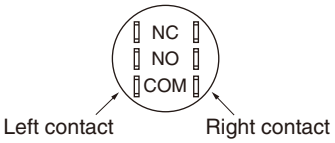

*2 ●, ▬: Means the contact closed (ON).
• See page C1-158 for the outline dimensions.

• Key removal position

Specify the key removal position in the square ■ mark.

Key removable position	Applied operator action 3	6	7	1	Code
Left	○	–	○	–	**A**
Left•Right	○	–	–	–	**B**
Left•Center•Right	○	–	–	–	**C**
Right	○	○	–	–	**D**
Center	○	○	○	○	**E**
Center•Right	○	○	–	–	**F**
Left•Center	○	–	○	–	**G**

○: Available –: Not available

• Type of key

Type *1	A	B	C	D	E	F
Code	**A**	**B**	**C**	**D**	**E**	**F**

*1 "A" is standard.

AF16 and DF16
Type numbers and dimensions

• **Dimensions, mm**

Key with rectangular bezel
AR16JT

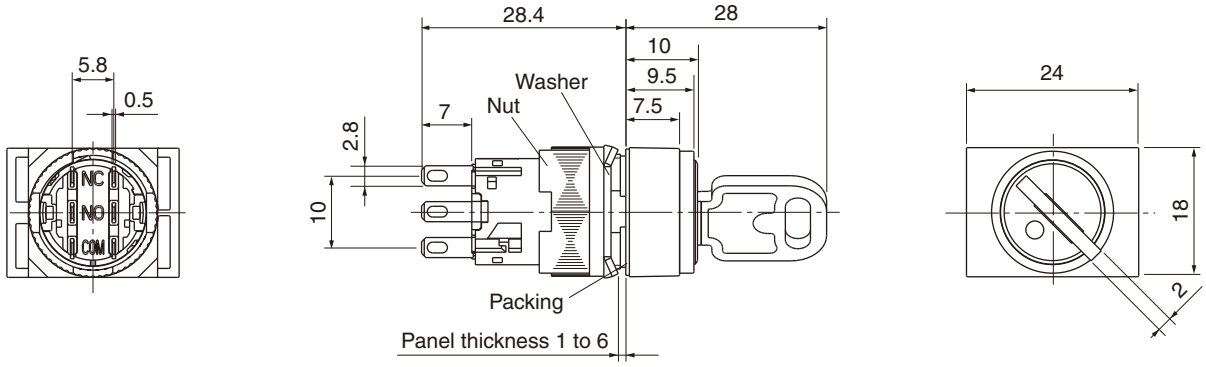

Key with square bezel
AR16JS

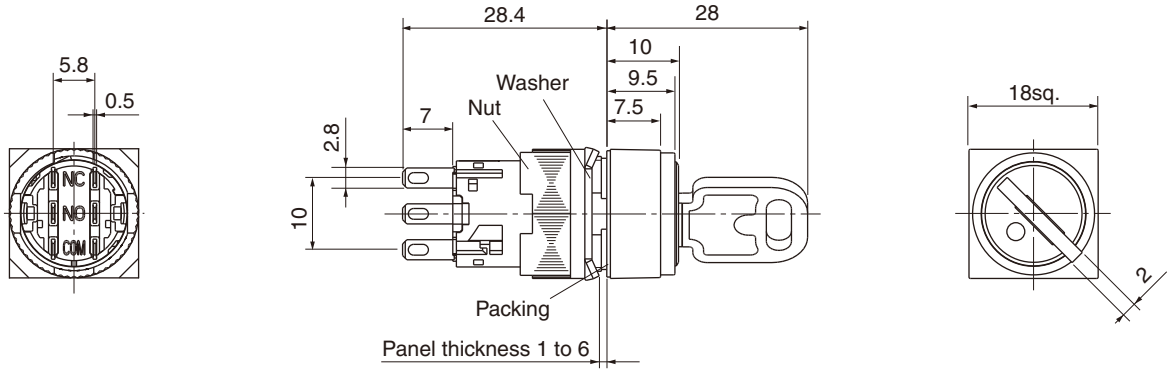

Key with round bezel
AR16JR

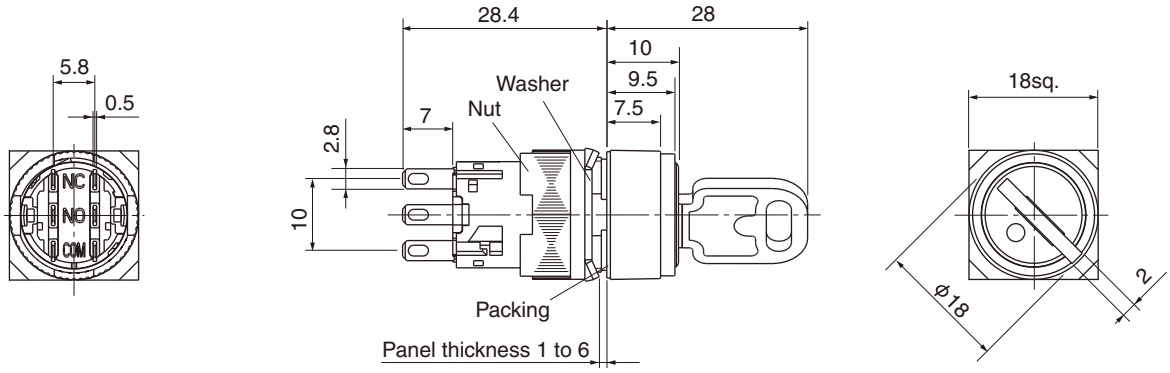

■ Illuminated pushbutton switches (LED lamp)

• Type number system

AF16 F0N – C2 E3 G

- AF16: Prodect category: Thin type
- F0N: Operator shape and action
- C2: Contact arrangement and terminal
- E3: Lamp operational voltage and light source
- G: Color of button

• Type

Operator	Appearance (Thin type)	LED lamp operational voltage	Conntact arrangement	Momentary action Type	Alternate action Type
Flush rectangular	**AF16F0N, F5N**	6V AC/DC	SPDT	**AF16F0N-C1A3□**	**AF16F5N-C1A3□**
			2PDT	**AF16F0N-C2A3□**	**AF16F5N-C2A3□**
		12V AC/DC	SPDT	**AF16F0N-C1B3□**	**AF16F5N-C1B3□**
			2PDT	**AF16F0N-C2B3□**	**AF16F5N-C2B3□**
		24V AC/DC	SPDT	**AF16F0N-C1E3□**	**AF16F5N-C1E3□**
			2PDT	**AF16F0N-C2E3□**	**AF16F5N-C2E3□**
Flush square	**AF16F0M, F5M**	6V AC/DC	SPDT	**AF16F0M-C1A3□**	**AF16F5M-C1A3□**
			2PDT	**AF16F0M-C2A3□**	**AF16F5M-C2A3□**
		12V AC/DC	SPDT	**AF16F0M-C1B3□**	**AF16F5M-C1B3□**
			2PDT	**AF16F0M-C2B3□**	**AF16F5M-C2B3□**
		24V AC/DC	SPDT	**AF16F0M-C1E3□**	**AF16F5M-C1E3□**
			2PDT	**AF16F0M-C2E3□**	**AF16F5M-C2E3□**
Flush round	**AF16F0L, F5L**	6V AC/DC	SPDT	**AF16F0L-C1A3□**	**AF16F5L-C1A3□**
			2PDT	**AF16F0L-C2A3□**	**AF16F5L-C2A3□**
		12V AC/DC	SPDT	**AF16F0L-C1B3□**	**AF16F5L-C1B3□**
			2PDT	**AF16F0L-C2B3□**	**AF16F5L-C2B3□**
		24V AC/DC	SPDT	**AF16F0L-C1E3□**	**AF16F5L-C1E3□**
			2PDT	**AF16F0L-C2E3□**	**AF16F5L-C2E3□**

Note: • The panel cutting dimensions differ depending on the operator shape of thin type model. See page C1-171.
• For the dimensions, see page C1-160.

•Button color

Replace the □ mark by the color code.

Color	Green	Red	White	Yellow	Orange	Blue
Code	G	R	W *1	Y	A	S

Note: *1 A combination of the translucent button and the white legend plate comes to white lens.

AF16 and DF16
Type numbers and dimensions

• **Dimensions, mm**

Flush rectangular
AF16F0N, F5N

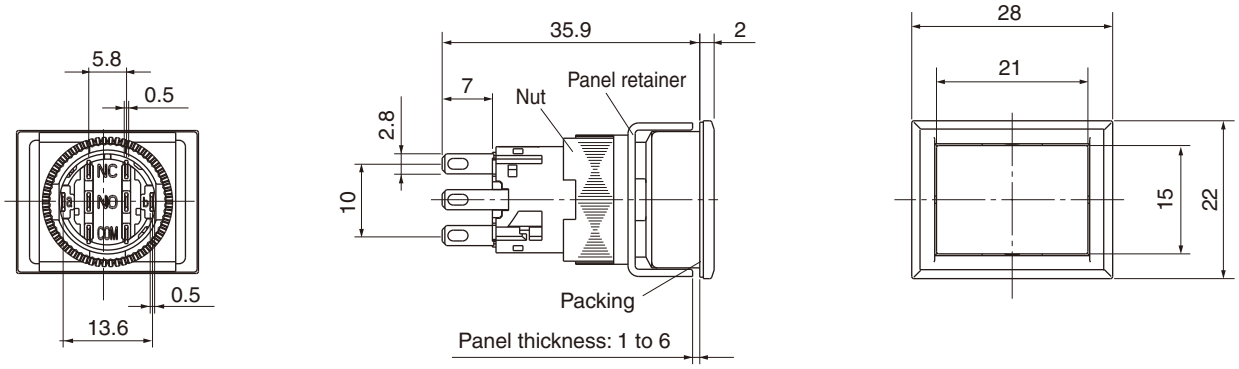

Flush square
AF16F0M, F5M

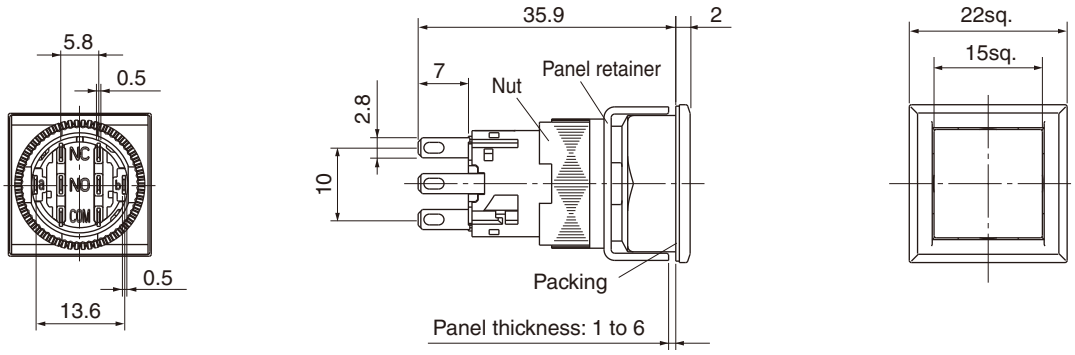

Flush round
AF16F0L, F5L

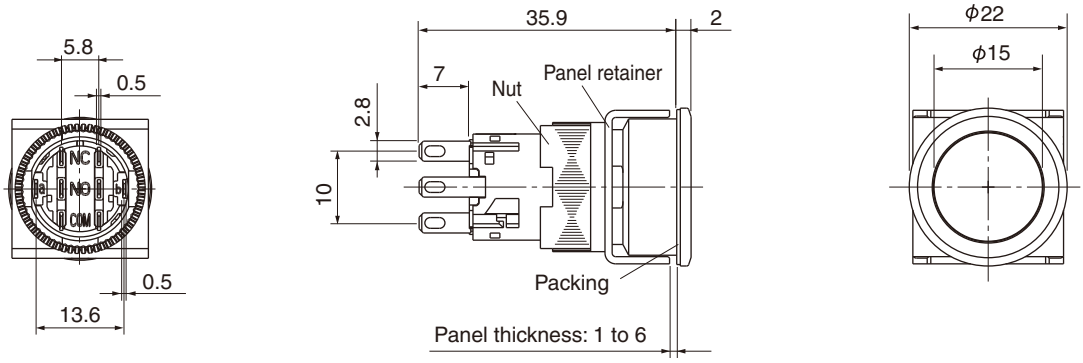

■ Pushbutton switches

• Type number system

AF16 F0T – C2 G

- AF16: Prodect category: Thin type
- F0T: Operator shape and action
- C2: Contact arrangement and terminal
- G: Color of button

• Type

Operator	Appearance (Thin type)	Contact arrangement	Momentary action Type	Alternate action Type
Flush rectangular	**AF16F0T, F5T**	SPDT	**AF16F0T-C1□**	**AF16F5T-C1□**
		2PDT	**AF16F0T-C2□**	**AF16F5T-C2□**
Flush square	**AF16F0S, F5S**	SPDT	**AF16F0S-C1□**	**AF16F5S-C1□**
		2PDT	**AF16F0S-C2□**	**AF16F5S-C2□**
Flush round	**AF16F0R, F5R**	SPDT	**AF16F0R-C1□**	**AF16F5R-C1□**
		2PDT	**AF16F0R-C2□**	**AF16F5R-C2□**

Note: • The panel cutting dimensions differ depending on the operator shape of thin type model. See page C1-171.
• For the dimensions, see page C1-162.

• Button color

Replace the □ mark by the color code.

Color	Green	Black	Red	White	Yellow	Orange	Blue
Code	G	B *1	R	W *2	Y	A	S

Notes: *1 A combination of the translucent button and the black legend plate comes to black.
*2 A combination of the translucent button and the white legend plate comes to white.

AF16 and DF16
Type numbers and dimensions

• **Dimensions, mm**

Flush rectangular
AF16F0T, F5T

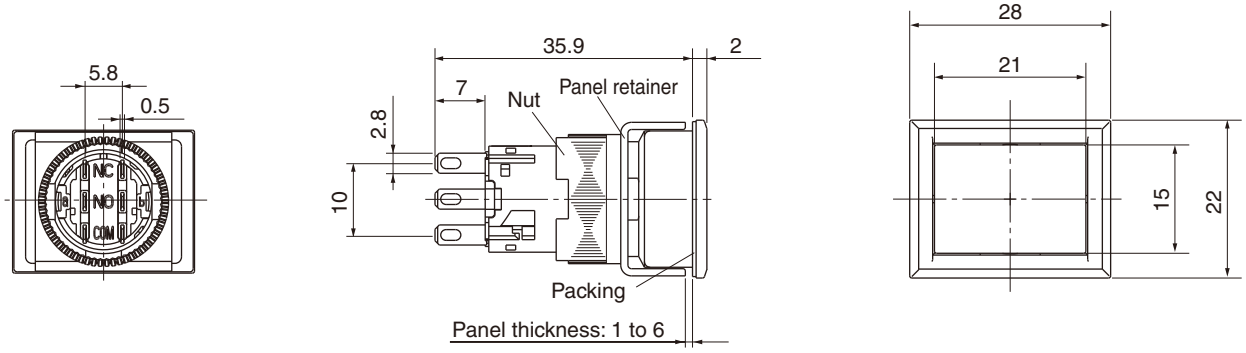

Flush square
AF16F0S, F5S

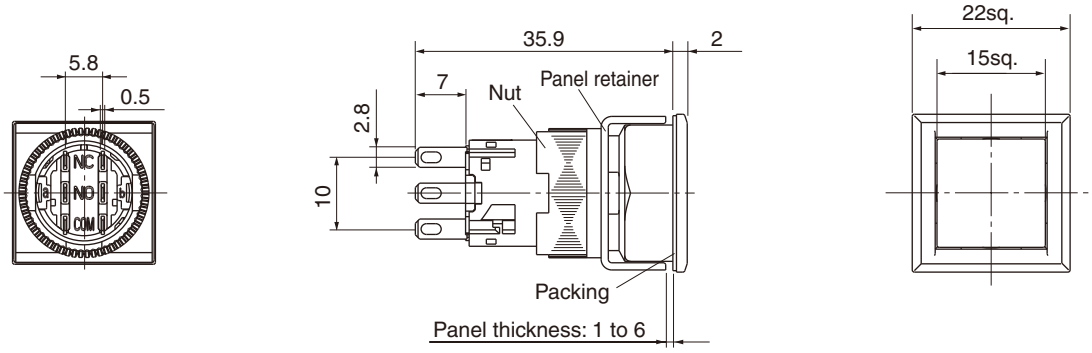

Flush round
AF16F0R, F5R

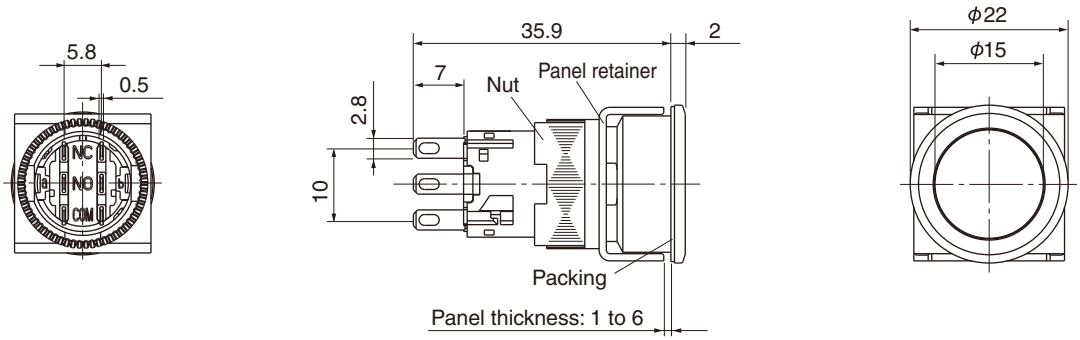

■ Pilot lights (LED lamp)

• Type number system

DF16 F0N – E3 W

- DF16: Product category: Thin type
- F0N: Lens shape
- E3: Lamp operational voltage and light source
- W: Color of lens

• Type

Lens	Appearance (Thin type)	LED lamp operational voltage	Type
Flush rectangular	**DF16F0N**	6V AC/DC	**DF16F0N-A3□**
		12V AC/DC	**DF16F0N-B3□**
		24V AC/DC	**DF16F0N-E3□**
Flush square	**DF16F0M**	6V AC/DC	**DF16F0M-A3□**
		12V AC/DC	**DF16F0M-B3□**
		24V AC/DC	**DF16F0M-E3□**
Flush round	**DF16F0L**	6V AC/DC	**DF16F0L-A3□**
		12V AC/DC	**DF16F0L-B3□**
		24V AC/DC	**DF16F0L-E3□**

Note: • The panel cutting dimensions differ depending on the lens shape of thin type model. See page C1-171.
• For the dimensions, see page C1-164.

• Lens color

Replace the □ mark by the color code

Color	Green	Red	White	Yellow	Orange	Blue
Code	G	R	W *1	Y	A	S

Note: *1 A combination of the transparent lens and the white legend plate comes to white.

AF16 and DF16
Type numbers and dimensions

• **Dimensions, mm**

Flush rectangular
DF16F0N

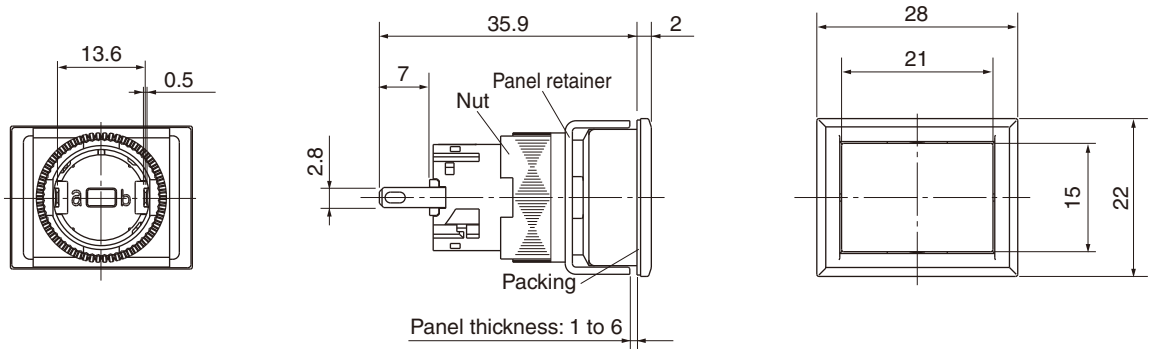

Flush square
DF16F0M

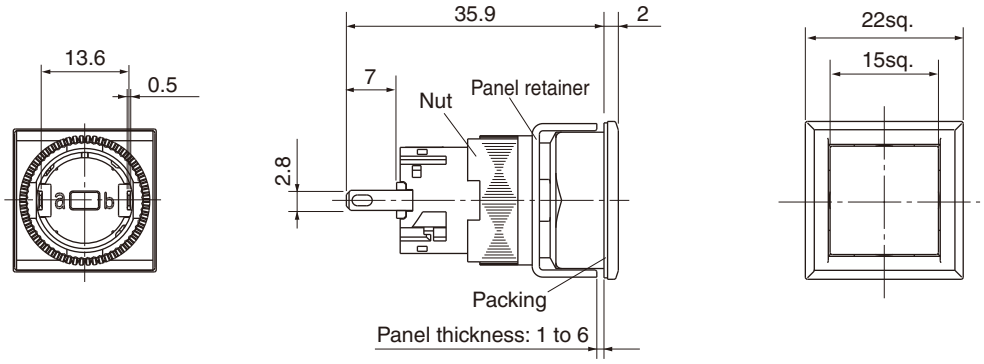

Flush round
DF16F0L

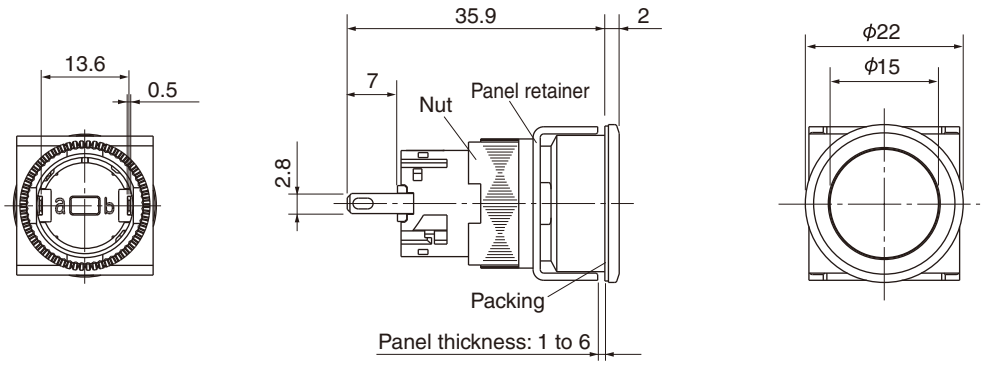

■ Selector switches (Knob type)

• Type number system

AF16 PT – 2 C2 B

- Product category: Thin type
- Operator shape
- No. of positions and operator action
- Contact arrangement and terminal
- Color of knob: Black

• Type

2-position

Operator (Thin type)	Conntact arrangement	Type: Maintained/90° (1, 2)	Type: Spring return/90° (1, 2)	Contact operation: Contact unit *1			Operator position *2: 1	Operator position *2: 2
Knob with rectangular bezel/**AF16PT**	SPDT	**AF16PT-2C1B**	**AF16PT-0C1B**	Left	COM	NC	●	
		AF16PS-2C1B	**AF16PS-0C1B**					
		AF16PR-2C1B	**AF16PR-0C1B**			NO		●
Knob with square bezel/**AF16PS**	2PDT	**AF16PT-2C2B**	**AF16PT-0C2B**	Left	COM	NC	●	
		AF16PS-2C2B	**AF16PS-0C2B**			NO		●
Knob with round bezel/**AF16PR**		**AF16PR-2C2B**	**AF16PR-0C2B**	Right	COM	NC	●	
						NO		●

Notes: *1 Terminal arrangement of contact (view from terminal side).

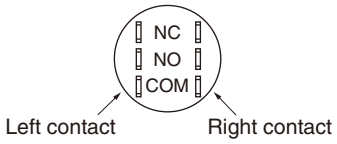

*2 ●: Contact closed.
• The panel cutting dimensions differ depending on the operator shape of thin type model. See page C1-171.
• For the dimensions, see page C1-167.

AF16 and DF16
Type numbers and dimensions

3-position

Operator (Thin type)	Contact arrangement	Type		Contact operation		
		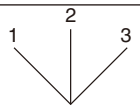 Maintained/each 45°	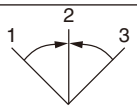 Spring return/each 45°	Contact unit *1		Operator position *2 (1 / 2 / 3)
Knob with flush square/**AF16PT**	2PDT	**AF16PT-3C2B**	**AF16PT-1C2B**	Left	COM – NC	▬
		AF16PS-3C2B	**AF16PS-1C2B**		COM – NO	●
Knob with square bezel/**AF16PS**		**AF16PR-3C2B**	**AF16PR-1C2B**	Right	COM – NC	▬
					COM – NO	●
		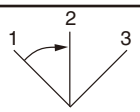 Spring/manual return/each 45°	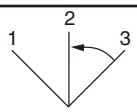 Spring/manual return/each 45°	Contact unit *1		Operator position *2 (1 / 2 / 3)
Knob with round bezel/**AF16PR**		**AF16PT-6C2B**	**AF16PT-7C2B**	Left	COM – NC	▬
		AF16PS-6C2B	**AF16PS-7C2B**		COM – NO	●
		AF16PR-6C2B	**AF16PR-7C2B**	Right	COM – NC	▬
					COM – NO	●

Notes: *1 Terminal arrangement of contact (view from terminal side).

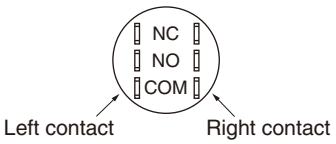

*2 ●, ▬: Contact closed.
• The panel cutting dimensions differ depending on the operator shape of thin type model. See page C1-171.
• For the dimensions, see page C1-167.

• **Dimensions, mm**

Knob with rectangular bezel
AF16PT

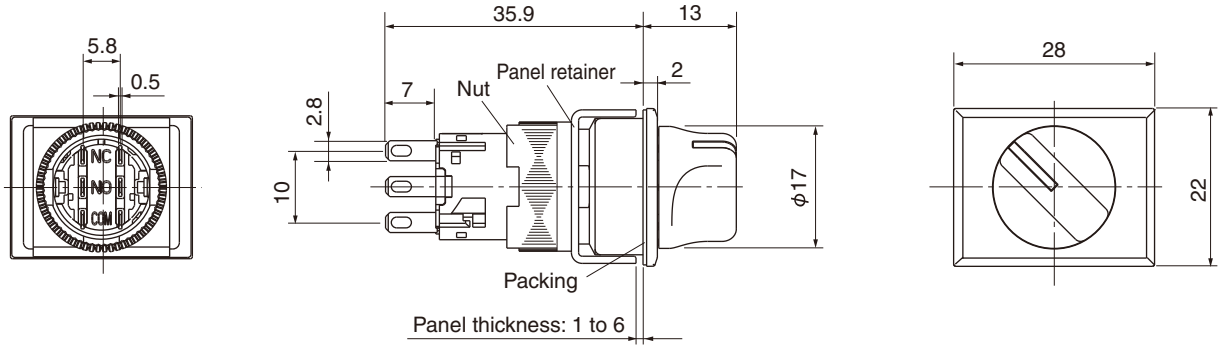

Knob with square bezel
AF16PS

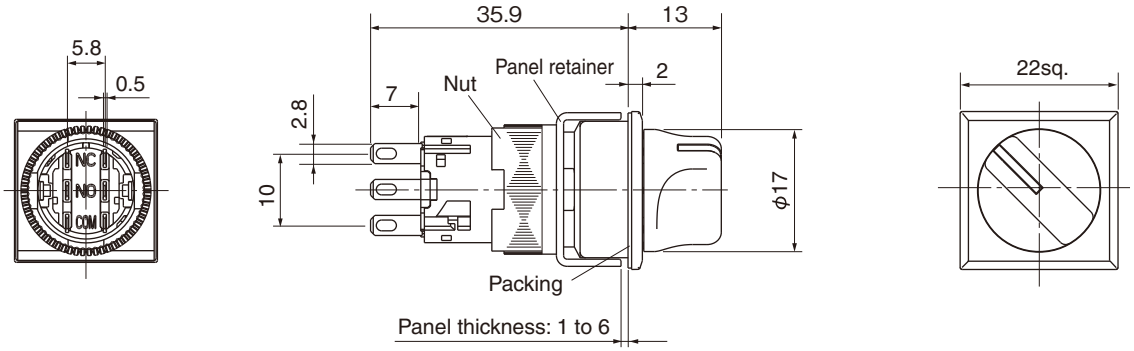

Knob
AF16PR

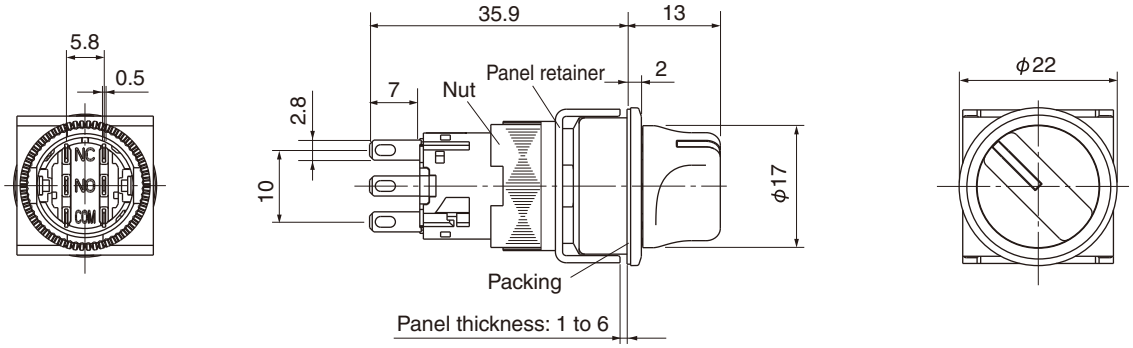

AF16 and DF16
Type numbers and dimensions

■ Selector switches (Key type)

• Type number system

AF16 JT – 2 B C2 A

- Product category: Standard type
- Operator shape
- No. of positions and operator action
- Type of key
- Contact arrangement and terminal
- Key removable position

• Type

2-position

Operator (Thin type)	Contact arrangement	Type: Maintained/90°	Type: Spring return/90°	Contact operation: Contact unit *1			Operator position *2: 1	Operator position *2: 2
Key with rectangular bezel/**AF16JT**	SPDT	**AF16JT-2■C1A** **AF16JS-2■C1A** **AF16JR-2■C1A**	**AF16JT-0AC1A** **AF16JS-0AC1A** **AF16JR-0AC1A**	Left	COM	NC	●	
						NO		●
Key with square bezel/ **AF16JS**	2PDT	**AF16JT-2■C2A** **AF16JS-2■C2A**	**AF16JT-0AC2A** **AF16JS-0AC2A**	Left	COM	NC	●	
						NO		●
Key with round bezel/ **AF16JR**		**AF16JR-2■C2A**	**AF16JR-0AC2A**	Right	COM	NC	●	
						NO		●

Notes: *1 Terminal arrangement of contact (view from terminal side).

Left contact Right contact

*2 ●: Contact closed.
• The panel cutting dimensions differ depending on the operator shape of thin type model. See page C1-171.
• For the dimensions, see page C1-170.

• Key removable position

Replace the ■ mark by the removable positiom code.

Removable position	Applied operatior position 2	Applied operatior position 0	Code
Left ⊘	○	○	**A**
Left•Right ⊗	○	–	**B**
Left ⊘	○	–	**C**

○: Available –: Not available

• Type of key

Type *1	A	B	C	D	E	F
Code	**A**	**B**	**C**	**D**	**E**	**F**

*1 "A" is standard.

Fuji Electric FA Components & Systems Co., Ltd.
Information subject to change without notice

3-position

Operator (Thin type)	Contact arrangement	Type: Maintained/each 45°	Type: Spring return/each 45°	Contact operation: Contact unit *1		Operator position *2 (1 / 2 / 3)
Key with Flush square/ **AF16JT**	2PDT	**AF16JT-3■C2A**	**AF16JT-1EC2A**	Left	COM: NC	▬
		AF16JS-3■C2A	**AF16JS-1EC2A**		COM: NO	●
Key with square bezel/ **AF16JS**		**AF16JR-3■C2A**	**AF16JR-1EC2A**	Right	COM: NC	▬
					COM: NO	●
		Spring/manual return/each 45°	Spring/manual return/each 45°	Contact unit *1		Operator position *2 (1 / 2 / 3)
Key with round bezel/ **AF16JR**		**AF16JT-6■C2A**	**AF16JT-7■C2A**	Left	COM: NC	▬
		AF16JS-6■C2A	**AF16JS-7■C2A**		COM: NO	●
		AF16JR-6■C2A	**AF16JR-7■C2A**	Right	COM: NC	▬
					COM: NO	●

Notes: *1 Terminal arrangement of contact (view from terminal side).

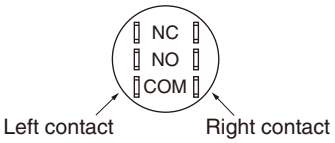

*2 ●, ▬: Contact closed.
• The panel cutting dimensions differ depending on the operator shape of thin type model. See page C1-171.
• For the dimensions, see page C1-170.

• Key removable position

Replace the ■ mark by the removable positiom code.

Removable position	Applied operatior position 3	6	7	1	Code
Left ⊘	○	–	○	–	**A**
Left•Right ⊗	○	–	–	–	**B**
Left•Center•Right ⊛	○	–	–	–	**C**
Right ⊘	○	○	–	–	**D**
Center ⓘ	○	○	○	○	**E**
Center•Right ⊘	○	○	–	–	**F**
Left•Center ⊘	○	–	○	–	**G**

○ : Available –: Not available

• Type of key

Type *1	A	B	C	D	E	F
Code	**A**	**B**	**C**	**D**	**E**	**F**

*1 "A" is standard.

AF16 and DF16
Type numbers and dimensions

• **Dimensions, mm**

Key with recrangular bezel
AF16JT

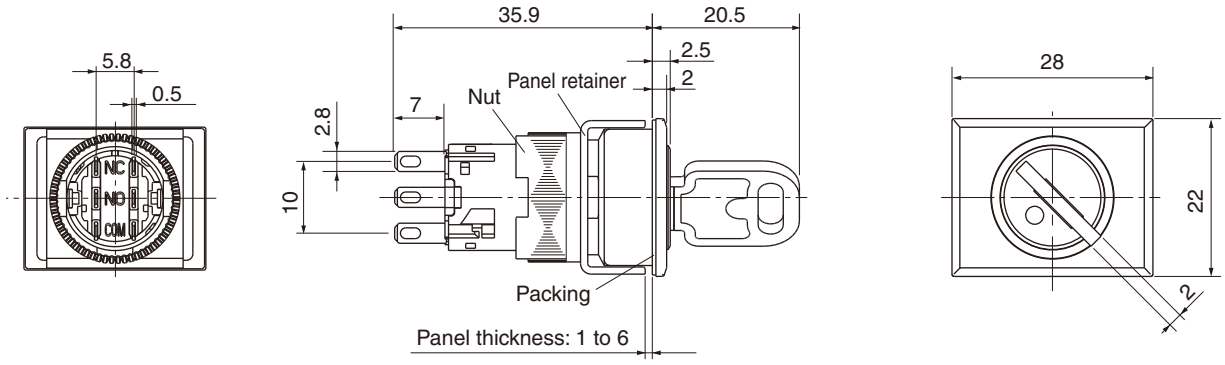

Key with square bezel
AF16JS

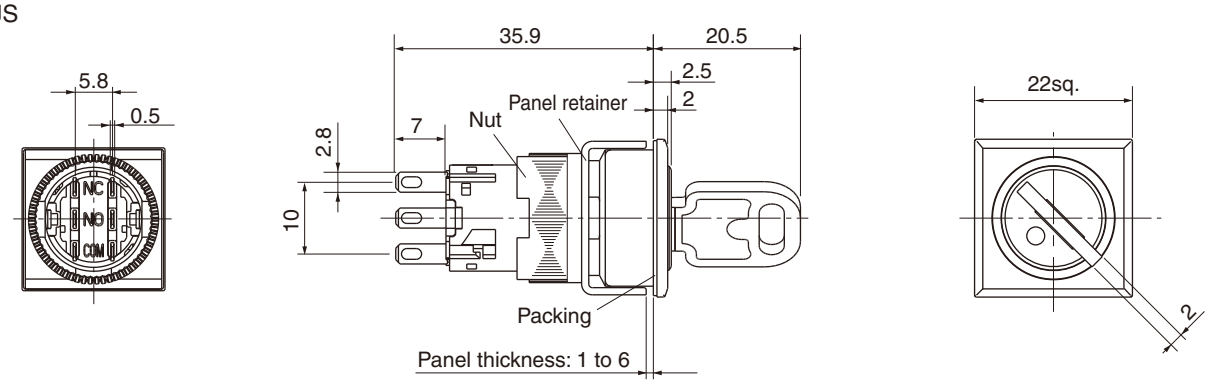

Key with round bezel
AF16JR

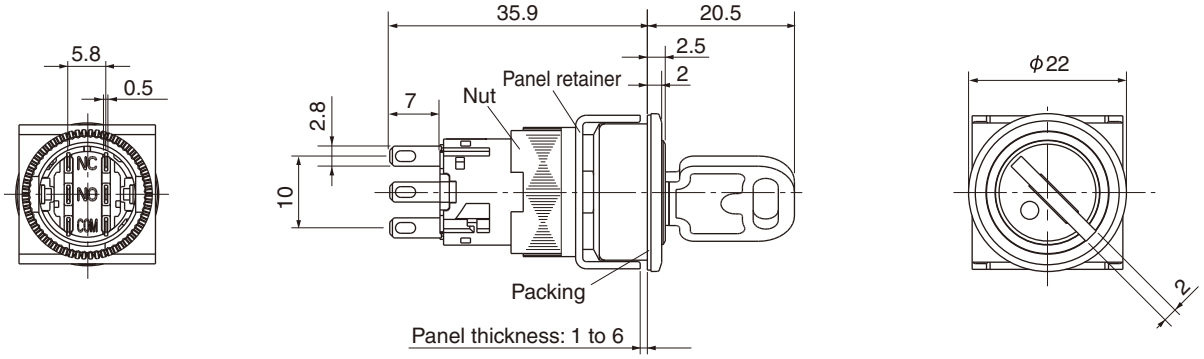

AR16, DR16 and AF16, DF16
Panel cutout and mounting

Safety Precautions

Read the Operating Instructions carefully before mounting, wiring, operating, servicing, or inspecting the command switch. Make sure that the Operating Instructions is delivered to the final user of the command switch.

- The safety precautions are classified into two levels, Warning and Caution, with meanings described as follows:

⚠ Warning : If operation is incorrect, a dangerous situation may occur, resulting in death or serious injuries.

⚠ Caution : If operation is incorrect, a dangerous situation may occur, resulting in minor to medium injuries or physical damage to equipment.

An item described under CAUTION may result in a serious accident, depending on the situation.

⚠ Warning

- Do not touch or approach any live part while power is supplied. An electric shock or burning may result.
- Be sure to turn off the power before mounting, dismounting, wiring, or inspecting the product. An electric shock, burning from short-circuiting or equipment malfunction may result.

⚠ Caution

- Wire the product according to the wiring instructions in the Operating Instructions. Make sure that the size of the wires is suitable for the voltage and applied current. The wrong wiring may result in fire, accidents or malfunctions.
- Treat the product as industrial waste when it is to be discarded.

■ Panel cutout, mm

- **Standard type** (common)

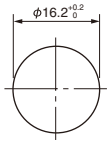

When requiring rotation prevention or positional stabilization

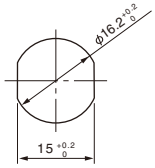

Note: When changing the operating angle position of the selector switch, the panel cutout also requires an angle change.

- **Thin type** (The panel cutout dimension varies depending on the operator or lens shape.)
- Rectangular type

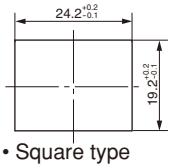

- Square type

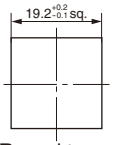

- Round type

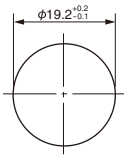

When requiring rotation prevention or positional stabilization

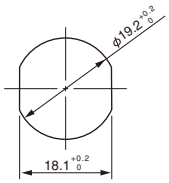

Note: When changing the operating angle position of the selector switch, the panel cutout also requires an angle change.

■ Installation on panel

- As shown in the figure below, insert the switch main unit into the mounting hole from the front of the panel, attach the washer and tightening nut from the back of the panel, and securely tighten the nut with the wrench (AHX601).

Note: The proper tightening torque is 0.6 to 1.0 N•m.

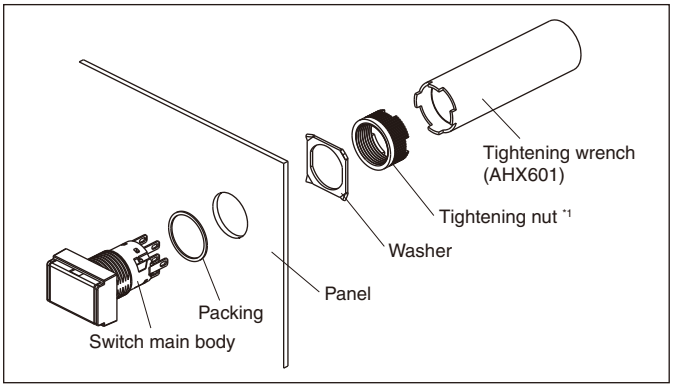

Note: *1 Do not use pliers or other improper tools to tighten the nut, or tighten it excessively, Otherwise, the nut may be damaged or the switch may malfunction.

- **Thin type**

As shown in the figure below, insert the switch main unit into the mounting hole from the front of the panel, attach the panel retainer from the back of the panel, and securely tighten the nut with the wrench (AHX601).

Note: The proper tightening torque is 0.6 to 1.0 N•m.

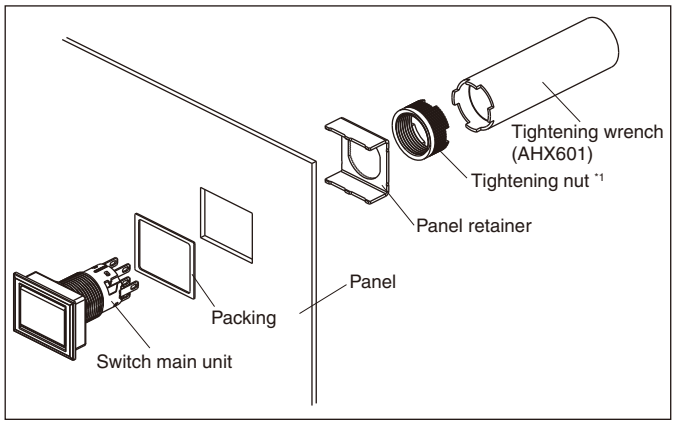

Note: *1 Do not use pliers or other improper tools to tighten the nut, or tighten it excessively, Otherwise, the nut may be damaged or the switch may malfunction.

■ Applicable panel thickness

Tables 1 and 2 show applicable panel thickness.

Table 1 Standard type (AR16/DR16 series)

Mounting condition		Applicable panel thickness, mm
Without accessories		1 to 6
With accessories	Protective cover	1 to 4
	Dust-tight cover	1 to 4
	Various sockets	1 to 3.2
	Terminal cover	1 to 3.2
	Protective cover + various sockets	1 to 1.6
	Protective cover + Terminal cover	1 to 1.6
	Dust-tight cover + various sockets	Cannot be used.
	Dust-tight cover + Terminal cover	Cannot be used.

AR16, DR16 and AF16, DF16
Panel cutout and mounting

Table 2 Thin type (AF16/DF16 series)

Mounting condition		Applicable panel thickness, mm
Without accessories		1 to 6
With accessories	Protective cover	1 to 4
	Various sockets	1 to 3.2
	Terminal cover	1 to 3.2
	Protective cover + various sockets	1 to 3.2
	Protective cover + Terminal cover	1 to 3.2

■ High-density mounting

Minimum mounting space (pitch) without accessories, mm

• **Standard type** (AR16/DR16 series)

Illuminated pushbuttons, pushbuttons, selectors, and pilot lights

①Rectangular ②Square ③Round, dome

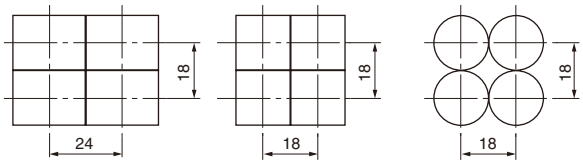

Note: Determine the mounting pitch by taking the operatbility and wiring work into consideration.

• **Thin type** (AF16/DF16 series)

Illuminated pushbuttons, pushbuttons, selectors, and pilot lights

①Rectangular ②Square ③Round, dome

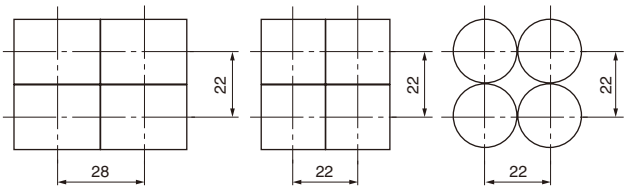

Note: Determine the mounting pitch by taking the operatbility and wiring work into consideration.

Minimum mounting space (pitch) with accessories, mm

• Protective cover AHX669 and AHX826 (Standard type)

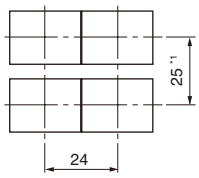

*1 43: with the cover fully opened

• Protective cover AHX671 (Standard type)

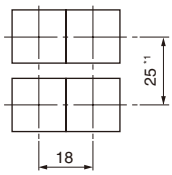

*1 43: with the cover fully opened

• Protective cover AF6D826 (Thin type)

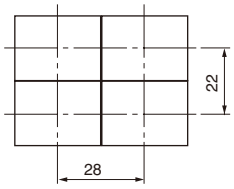

• Protective cover AF6D827 (Thin type)

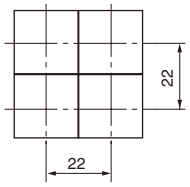

• Dust-tight cover AHX668 (Standard type)

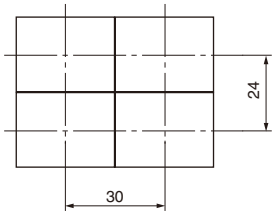

• Dust-tight cover AHX822 (Standard type)

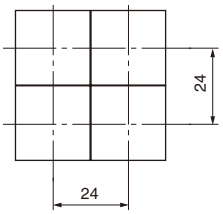

• Minimum mounting spaces (pitch) with sockets, such as Fast-Connection socket (AR6S690), connector socket (AR6S691) and PC board-use socket (AR6S692) are the same as those without accessories.

Note: Determine the mounting pitch by taking the operability and wiring workability into consideration.

Safety Precautions

Read the Operating Instructions carefully before mounting, wiring, operating, servicing, or inspecting the command switch. Make sure that the Operating Instructions is delivered to the final user of the command switch.

- The safety precautions are classified into two levels, Warning and Caution, with meanings described as follows:

⚠ Warning : If operation is incorrect, a dangerous situation may occur, resulting in death or serious injuries.

⚠ Caution : If operation is incorrect, a dangerous situation may occur, resulting in minor to medium injuries or physical damage to equipment.

An item described under CAUTION may result in a serious accident, depending on the situation.

⚠ Warning
• Do not touch or approach any live part while power is supplied. An electric shock or burning may result. • Be sure to turn off the power before mounting, dismounting, wiring, or inspecting the product. An electric shock, burning from short-circuiting, or equipment malfunction may result.

⚠ Caution
• Wire the product according to the wiring instructions in the Operating Instructions. Make sure that the size of the wires is suitable for the voltage and applied current. The wrong wiring may result in fire, accidents, or malfunctions. • Treat the product as industrial waste when it is to be discarded.

■ Method of replacing color lens, legend plate, and screen

Replacing color lens (screen)

• Standard type (AR16/DR16 series)

To remove the color lens, fit the color lens remover (AHX618) to the grooves in the color lens and pull out the lens, or pry the lens lightly with a small slotted screwdriver.

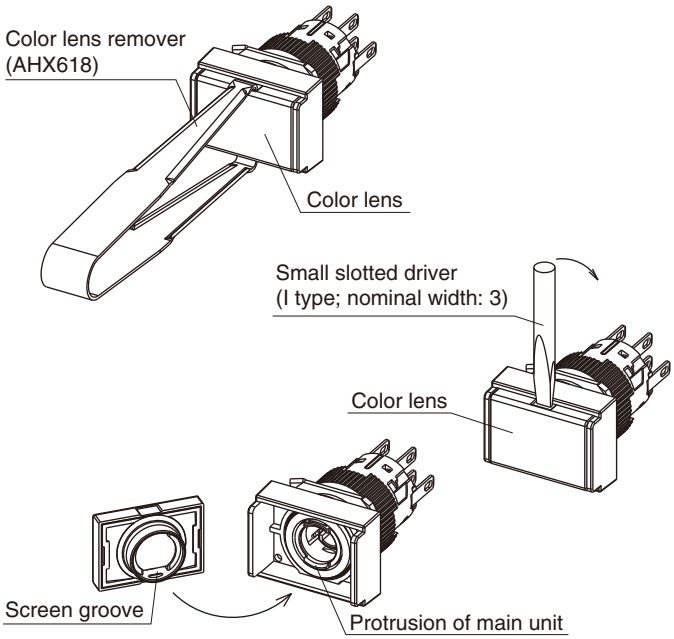

• Thin type (AF16/DF16 Series)

To remove the color lens, pry the lens lightly with a small slotted screwdriver.

If one side of the color lens is separated from the screen, further insert the screwdriver and remove the color lens together with the screen. Do not pry the packing when doing this.

To fit the color lens, align the protrusion of switch main body with the groove of the screen, and press-fit them.

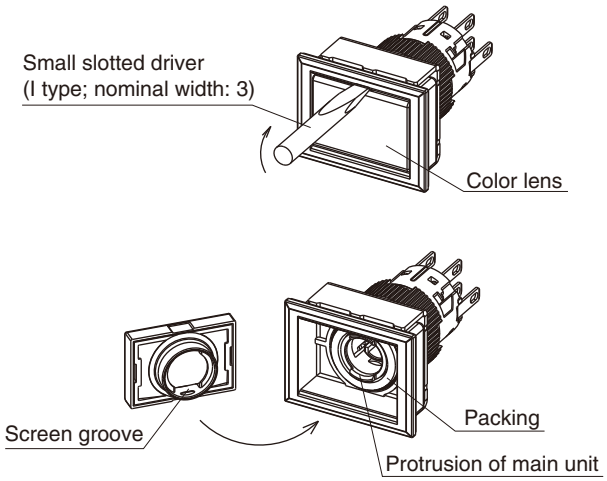

• Removing screen

Insert the tip of a small slotted screwdriver into the groove and press down the screwdriver in the direction of the arrow.

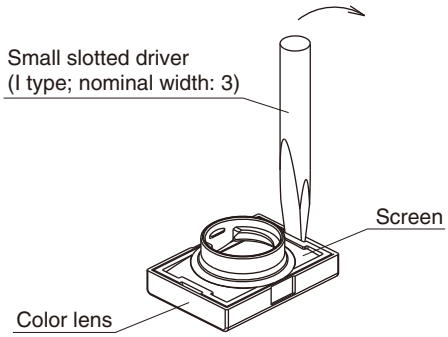

AR16, DR16 and AF16, DF16
Notes on use

Fitting color lens to screen

• Rectangular type

Set the textured surface side of the legend plate with the screen side, then press-fit the color lens. When press-fitting, make sure that your fingers do not touch the reflective surface inside the screen.

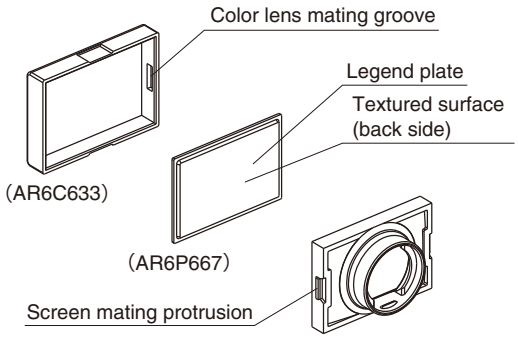

• Square type

Set the textured surface side of the legend plate with the screen side, align the screen protrusion with the color lens groove, and press-fit together. When press-fitting, make sure that your fingers do not touch the reflective surface inside the screen.

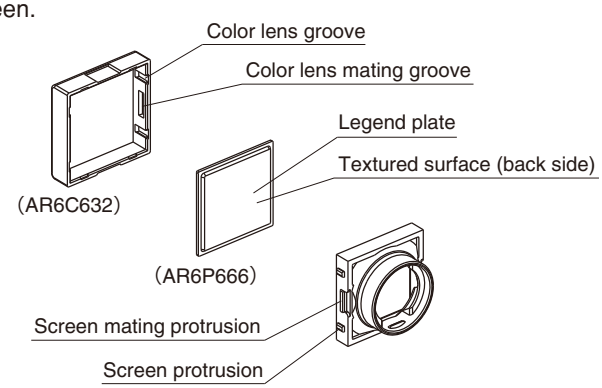

• Round type

Align the protrusion of the legend plate with the groove of the screen, also align the screen protrusion and color lens groove, and press-fit together. When press-fitting, make sure that your fingers do not touch the reflective surface inside the screen.

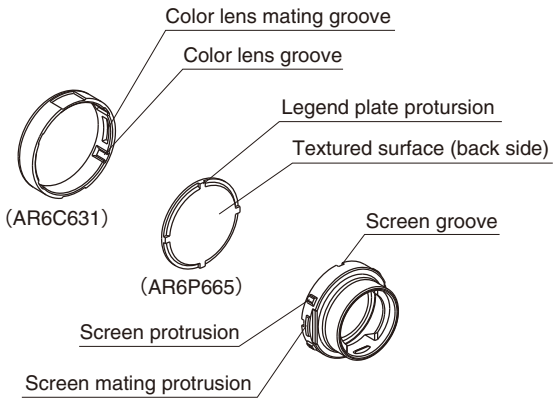

• For alternate action type of illuminated pushbutton switches and pushbutton switches, do not remove the color lenses (screens) in locked (depressed) state. The internal mechanisms may be damaged.

■ Engraving legend plate

Engrave the surface of the legend plate.

- Material: Acrylic resin
- Engraving depth: 0.5 mm max.
- Paint: Use a paint that has alcohol as its main ingredient, such as melamine paint, phthalic acid paint, or acrylic paint.

• Legend plate size

Shape	Size, mm
Rectangular	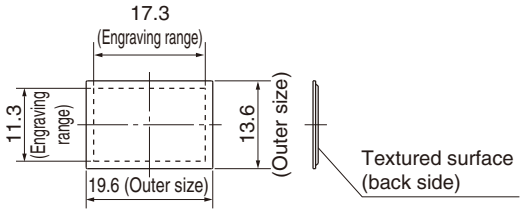
Square	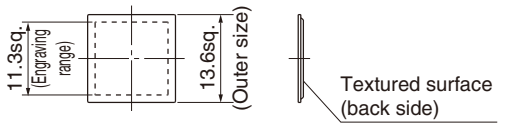
Round	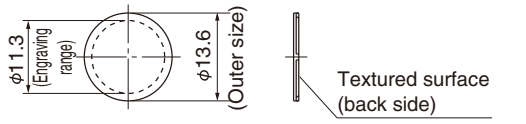

Notes: *1 A legend sheet may be used, provided that the external dimensions do not exceed the corresponding outer size specified in the above table and that the thickness is 0.1 mm or below. (No legend sheets are provided with the product. Please prepare on customer side.)
*2 Do not engrave any part other than the legend plate.

■ Changing the operating angle position of selector switch

The bezel is separated from the knob (key), which makes it easy to change the operating angle position in 45° increments (the AR16 series rectangular or square type only).

The following figures show a knob type example. The key type is the same.

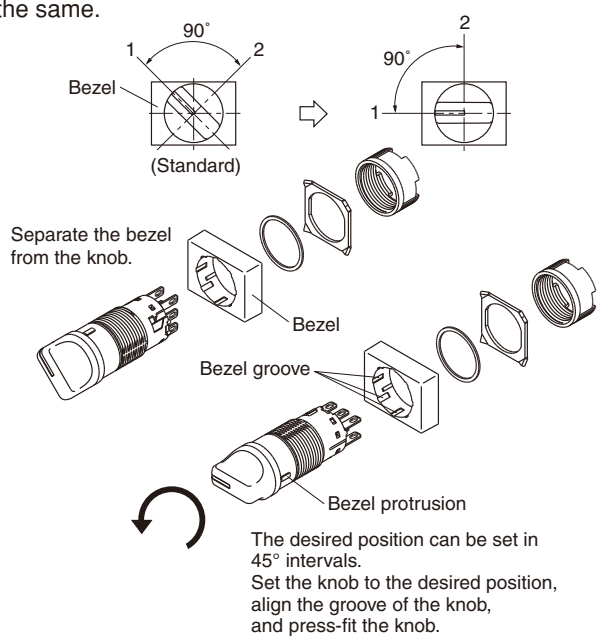

■ Method of replacing lamp

- To remove the LED lamp, insert the lamp changer (AHX672) in the LED lamp and pull out the LED lamp.
  To mount the LED lamp, align the lamp terminal side of the main unit with the electrode side of the LED lamp, lightly hold the lamp by hand or with the head of the lamp changer (AHX672), and insert the lamp.
  The LED lamp has no polarity, so it can be powered by either AC or DC.

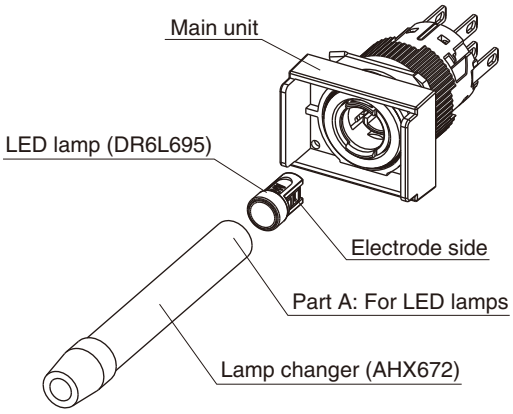

- Handling of LEDs
  LED whose luminous color is green or blue is sensitive to static electricity. Be careful when handling the LED. Take thorough measures against static electricity and surges when handling the product. The following anti-electrostatic measure is recommended.
  Use a wristband or anti-electrostatic glove when replacing LED lamps.

■ Wiring

- Wiring to tab terminal
  Use 110 (2.8mm) series receptacles for tab terminals.
- Pay attention to the following points when soldering.
  Type of solder: Use resin-core solder.
  Use a soldering iron with a maximum power consumption of 60W (350(C) within five seconds. Make sure that the terminal is free of tension during soldering. Also, do not deform the terminal.
- The melting point of lead-free solder is slightly high, which may make soldering difficult. Use a soldering iron that has a large soldering tip or high heat generation.
- Connectable wires
  Two solid wires with a maximum diameter of 0.8 mm (solder)
  One stranded wire with a maximum area of 0.75 mm^2 (solder)
  Flat-type connection terminal
  (2.8□-1.25-5) 0.5 to 1.25mm^2
  (2.8□-0.5-5) 0.2 to 0.5mm^2
- Use of contact blocks
  When using NO and NC contacts in the same contact block, avoid connection that involves opposite polarity or wiring from different types of power supply.
- For wiring to adjacent terminals, use the terminal cover (AR6Y261) to prevent short-circuit, or an insulation tube to assure isolation. For solder terminals, caution is required if thick wires, in particular, are connected or a large quantity of solder is used.

• Terminal arrangement

Model	Circuit diagram (example)	Terminal arrangement (view from the terminal (back) side)
Illuminated pushbuttons (2PDT)	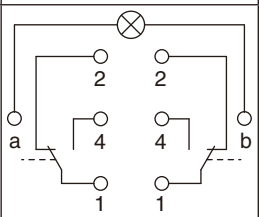	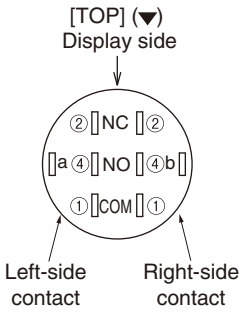
Pushbuttons and selector switches (2PDT)	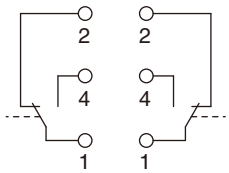	
Pilot lights	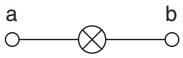	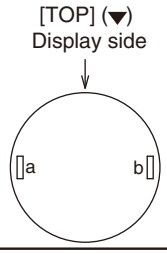

Note: Only the left-side contact is applicable to the SPDT mechanism.

AR16, DR16 and AF16, DF16
Notes on use

■ LED Lamps

- LED lamp malfunctioning (incorrect lighting)
  The LED lamp incorporates a circuit to prevent malfunctioning. Compared with conventional models, this LED lamp is less likely to malfunction, but it incorporates no absolute countermeasures.
  A minute current (approximately 0.25 mA) turns on the LED lamp. A leakage current from the surge absorption circuit or noncontact circuit, or stray capacitance between cables, may also turn on the LED lamp.
  In this case, a countermeasure (e.g., attaching a resistor in parallel with the LED lamp) is required.
- Countermeasure against malfunctioning
  Malfunctioning can be prevented by connecting a shunt resistor (R) in parallel. The resistance in that case varies with the model and operating conditions.

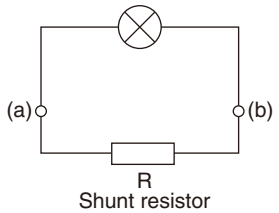

In the case of 24V DC
R: 10kΩ (0.5W)

In the case of 24V AC
R: 2kΩ (2W)

- The permissible fluctuation range for the operating voltage of the 6V model is ±5% and that for the 12V or 24V model is ±10%. If the operating voltage is always 5% or 10% higher, select a resistor that will make the operating current the same as or lower than the rated current, and connect the resistor in series to the LED lamp.

- Calculation of external resistance
  Example: Connecting a 24V red LED to a 48V circuit

$$\text{External resistance [}\Omega\text{]} = \frac{\text{Circuit voltage [V] - Rated voltage [V]}}{\text{Rated current [A]}}$$

$$= \frac{48-24}{7.5\times10^{-3}} = 3200\ [\Omega]$$

→ Therefore, use an external resistor of 3.3kΩ 1W.
(Select a resistor with sufficient wattage.)

- Surges
  High-brightness LED products use elements that are sensitive to static electricity. Keep in mind that an unusual voltage, such as a surge voltage, may cause the product to malfunction.

■ Selector Switches

- **Knob type**
  The knob can be operated by turning it lightly. Be careful to operate the knob with a torque not exceeding 1N•m.

- **Key type**
- Types of keys
  Five types (B, C, D, E, and F) are available in addition to the standard type (type A).
  Make sure that the symbol on the key coincides with the symbol on the switch.

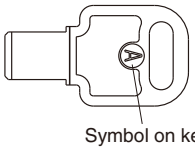

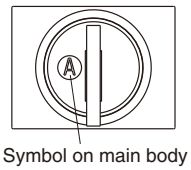

- Fully insert the key into the switch and turn the key. Do not pull on the key while turning it.
- Operate the key with a torque not exceeding 0.1N•m.
- Do not forcibly insert or extract the key.
- Do not attempt to operate the switch with the key insufficiently inserted or insert the wrong key. Otherwise, a malfunction may result.

■ Fast-connection socket

- **Connectable wires**
  - Standed wire : 0.3 to 0.75 mm^2 (AWG22 to AWG18)
  - Single wire : 0.5 to 1 mm dia.
  - Recommended ferrule : Phoenix Contact, part number AI0, 34-8TQ
    Wire size : 0.34 mm^2 (22 AWG)
    Crimping tool : CRIMPFOX UD6-6
    Note : Use a crimping tool with a hexagonal or round cross section.

  Sheath external diameter: 2.8 mm dia. Max.

- **Wire sheath stripping length**

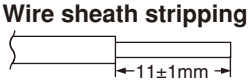

Note : If ferrules are used, securely insert the wire sheath inside a resin shell. Cut the end of the wire the same length as the ferrule or cut it at a position approximately 0.5 mm longer.

Check the length using the strip gauge on the surface of the socket displayed on the model nameplate. If standed wire is used, twist the wire so that there are no loose strands after stripping.

- **Connection method**

(1) Insert the wire while pressing the button on the insertion slot with a small flat-head screwdriver (tip width of 2 mm max.). Release the button when the wire is all the way seated in the switch.
(2) When disconnecting the wire, pull out the wire while pressing the button on the insertion slot with a small flat-head screwdriver. Cut the bare part of the wire if it was previously used, and then newly remove the sheath to reuse the wire.
(3) Insert a single wire for each insertion slot.
(4) Do not pull on the wires with excessive force (15 N or more) when you perform wiring. Make sure that not extemal force is exerted on the wires after wiring has been completed. The next time that a wire is inserted, the parts that support the wire may change shape and result in conduction failure.

- **Terminal arrangement (Rear-side View)**

(1) Socket Terminal Arrangement for AR6S690-L2

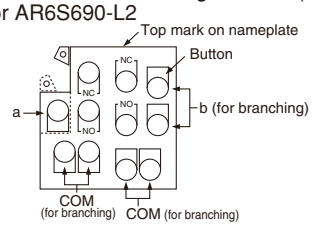

(2) Switch Terminal Arrangement for Illuminated 2PDT Contacts

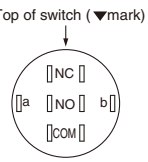

■ Connector sockets

- Connectable wires
  Stranded wire: 0.5 to 0.75 mm^2 (20AWG to 18AWG)
- Arrange for a receptacle terminal separately.
  Please confirm the manufacturer and part number in the instruction manual.
- Check the insertion position and insert the receptacle terminal into the socket after connecting the wires to the receptacle terminal. (The wires once connected cannot be disconnected.) Lightly pull the wires and check that the receptacle terminal is securely connected to the socket.

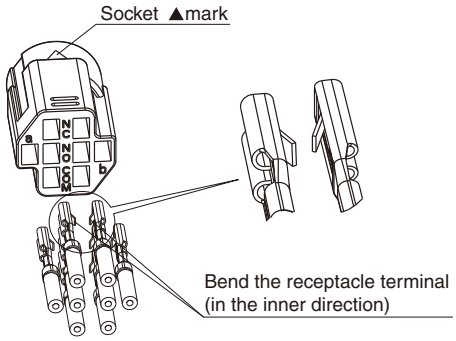

- Align the ▲ mark of the socket and the TOP (▼) mark of the switch, and put the socket and switch together.

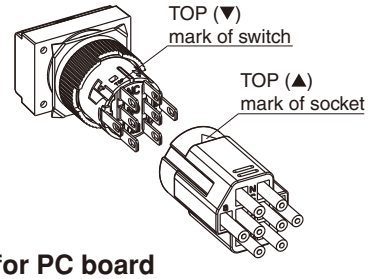

■ Socket for PC board

- Minimum mounting space (pitch), mm

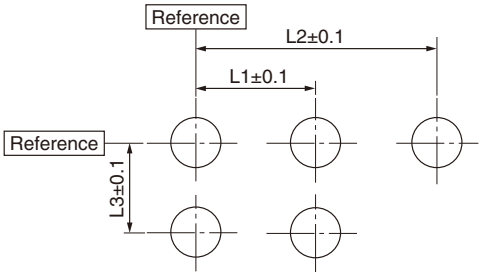

Obtain the mounting pitch based on a reference line to minimize the cumulative error.
Make sure that the centering difference between the switch and the PCB socket does not exceed 0.25 mm.

- Apply the following panel cutout dimensions (in mm) to stabilize the operator position of the switch when combined with the socket.

AR16/DR16 (common)

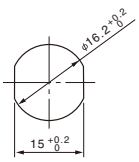

AF16/DF16 (round type)

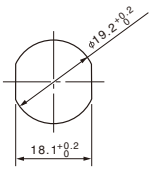

- Mount the switch to the panel. Make sure that the switch is free of any bends.

- PC board processing dimensions (in mm) as viewed from the socket mounting side.

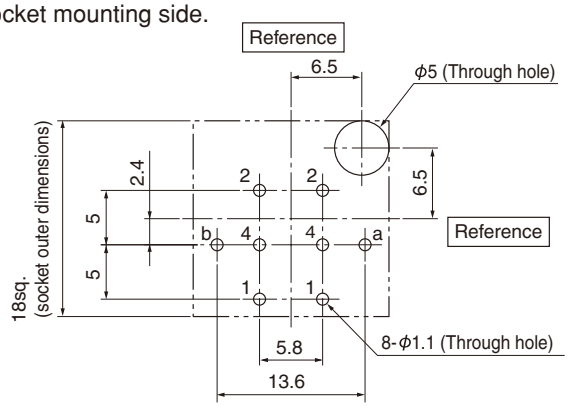

- The reference is the center of the socket (switch).
- Switch terminal arrangement (as viewed from the socket mounting side)

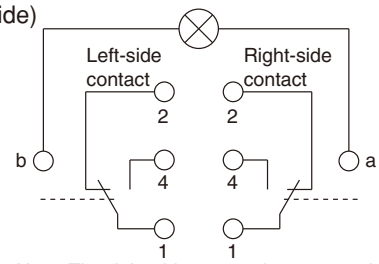

Note: The right-side contact is connected in the case of an SPDT contact.

- Insert the socket so that the lever will be located in the 5mm-diameter through hole of the PC board. Set the lever to the lock position as viewed from the socket mounting side.

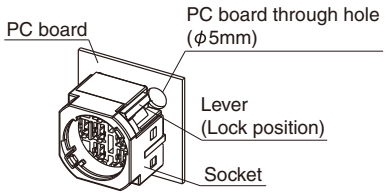

- Combine the switch-mounted panel with the socket on the PC board, and solder the socket terminal.

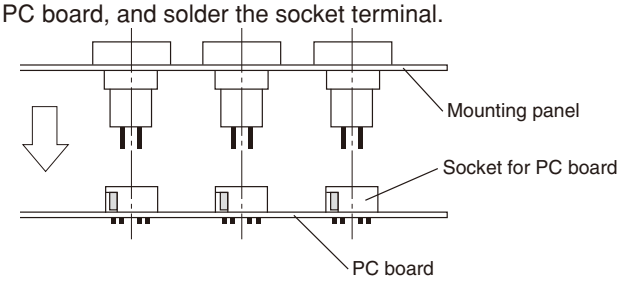

- Combine the PCB socket and the panel while making sure that the socket terminal does not fall off, and turn over the socket to do the soldering. Do not leave any space between the PC board and socket.
- After combining them, check that the lever as viewed from the soldering side is in the lock position, and solder the terminal.

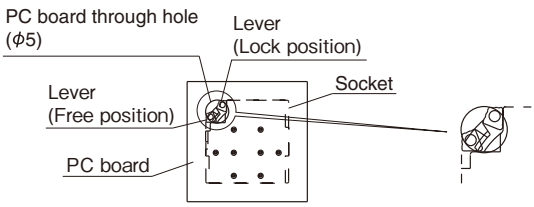

AR16, DR16 and AF16, DF16
Notes on use

- Pay attention to the following points when soldering.
  - Type of solder: Use resin-core solder.
  - Finish soldering at 350°C within 5 seconds.
  - Do not wash the socket.
  - Solder the socket so that no flux adheres to it.
- The melting point of lead-free solder is slightly higher than lead solder, which may make soldering difficult. Use a soldering iron with a large tip or that provides a high heat generation.
- Using a spacer between the panel and the PC board
  Make sure that the distance shown in the figure below is maintained between the panel and the PC board. The spacer dimensions vary with the thickness of the mounting panel.

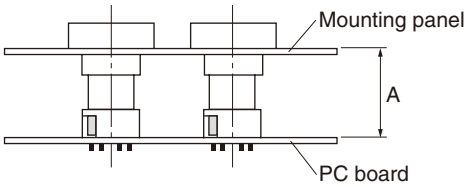

Series	A (mm)
AR16/DR16	30.2±0.2
AF16/DF16	37.7±0.2

- Mounting and removing PC board sockets
  - Removing
    Push down the socket levers all the way viewed from the soldering side in the direction of the free position and remove the PC board sockets. After removal, the socket levers will return to the lock position automatically.
  - Mounting
    Check that the socket lever as viewed from the soldering side is in the lock position, lightly insert the terminal and socket so their position is aligned with the switch on the panel, press the socket-mounting portion of the PC board, and securely insert the entire socket until the socket lever snaps. (Check that the lever as viewed from the soldering side is in the lock position.)
- Use the switch within the following rated voltage range when the PCB socket is used.
  - Rated insulation voltage: 60V
  - Rated operational voltage: 24V
  - Conventional free air thermal current: 3A
- Use a 1.6-mm-thick double-sided through-hole printed circuit board made of copper-plated laminated epoxy resin on a woven glass fabric base.
- In case of standard type (AR16 and DR16 series), beware that the adopted models are not allowed to attach the protective cover to some models and that the adopted models cannot be mounted to some models afterward.

■ Others

- Operation
  Do not hit or flip the button, or the button may be damaged.
  Be sure to operate the button by hand.
  Do not pull the button if the switch is an alternate action type.

- High-density mounting of illuminated type
  When continuously lighting pilot lights or pressing illuminated pushbuttons, keep in mind that the ambient temperature may exceed the rated value due to the heat radiated by the lamp. Be sure to ventilate the lamp /switch if the mounting panel is not made of metal or if the mounting panel is an enclosed type.

- Usage locations
  - Be sure to use and store the product within the rated ambient temperature and humidity ranges.
  - Although the product resists ordinary cutting oils and coolant oils, do not use the unit in places where special oils may be sprayed onto the product.
  - If dusts or filings accumulate in the gap between the button and the frame, the switch may fail to operate normally. Take appropriate measures, such as using a dust-proof protective cover, if the switch is to be used in places that are subject to dusts or filings.
  - The AR16/DR16 series and AF16/DF16 series are for indoor use. Make sure that the product is not exposed to direct sunlight.
  - Do not use the product in the places that are subject to the adverse effects of ozone or corrosive gases.

Protective cover (for Standard type)

KKD07-246

KKD07-247

KKD07-248

Type	Used with
AHX669	AR16F0N, F5N, F0T, F5T
AXH826 *	
AHX671	AR16F0M, F5M, F0S, F5S AR16E0L, E5L, E0R, E5R

* This cover returns to the home position with spring action to prevent accidental operation (Packing is provided).
Note: The cover cannot be used with the flush rectangular with guard type models.

AHX669

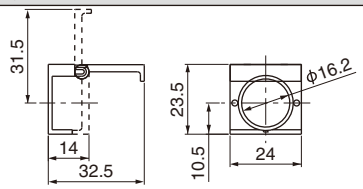

AHX826

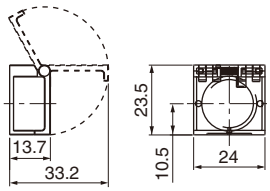

AHX671

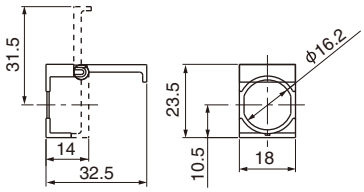

Protective cover (for Thin type)

KKD07-249

KKD07-250

Type	Used with
AF6D826-□	AF16F0N, F0T
AF6D827-□	AF16F0M, F0S

This cover prevents accidental operation.
Note: • The protective cover and the button are made of an integral structure.
• Enter the color code in the square box .

Color	Green	Red	Transparent *	Yellow	Orange	Blue
Code	**G**	**R**	**C**	**Y**	**A**	**S**
Color code of main unit	G	R	W, B	Y	A	S

* When the color code of the main unit is W, a combination of the transparent lens and the white legend plate comes to white. When it is B, a combination of the transparent lens and the black legend plate comes to black.
• This cover returns to the home position with spring action.
• Not applicable to alternate models.
• Dimensions when connected with a push-button switch (unit: mm)

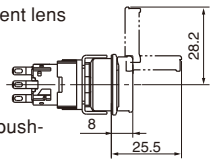

AF6D826

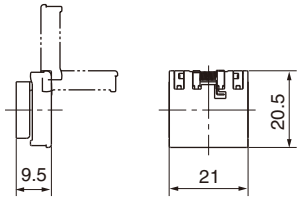

AF6D827

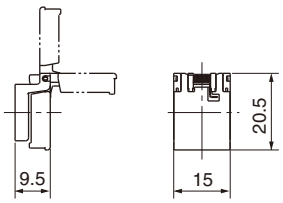

Dust-proof cover (for Standard type)

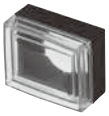
KKD07-251

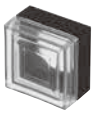
KKD07-252

Type	Used with
AHX668	AR16F0N, F5N, F0T, F5T
AHX822	AR16F0M, F5M, F0S, F5S AR16E0L, E5L, E0R, E5R

This cover seals the operator section to prevent powder or dust from invading inside the switch (Packing is provided).

AHX668

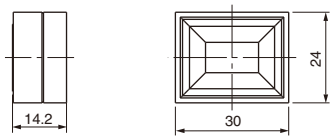

AHX822

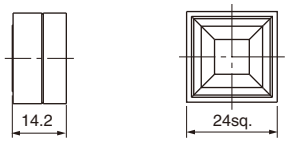

Terminal cover

KKD07-253

Type	Used with
AR6Y261	Illuminated pushbutton switch, pushbutton switch, selector switch, pilot light

Protective cover for insulation between terminals and live parts.
Note: • Dimensions when connected with a switch (pilot light) (unit: mm)

Standard type

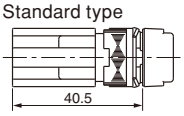

Thin type

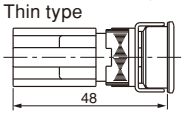

• Wiring work should be made first, and attach the cover to the switch (pilot light).
• Use cables of sheath outer diameter of ø2.8mm or less.

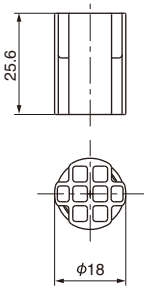

AR16, DR16 and AF16, DF16 Accessories

Description	Type	Dimensions, mm

Fast-connection socket

KKD08-093

Type	Used with
AR6S690-L1	Illuminated pushbutton switch : SPDT
AR6S690-L2	Illuminated pushbutton switch : 2PDT
AR6S690-LX	Pilot light
AR6S690-R1	Pushbutton switch, selector switch : SPDT
AR6S690-R2	Pushbutton switch, selector switch : 2PDT

By combining with a switch, they can be used as a Fast-connection type switch.
Note: Dimensions when connected with a switch (pilot light)
(unit:mm)

Standard type

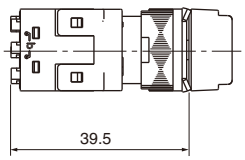

Thin type

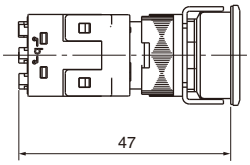

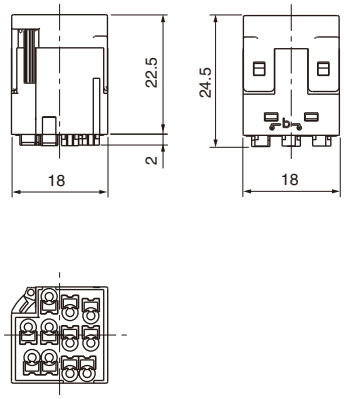

Connector socket

KKD07-255

Type	Used with
AR6S691-C	Illuminated pushbutton switch, pushbutton switch, selector switch, pilot light

By combining with receptacle terminals, this can be used as a connector.
Note: • The receptacle terminal is not supplied.
Please prepare the receptacle terminal Model No. CMC62895-F made by NICHIFU Co.,Ltd. on your side.
• Dimensions when connected with a switch (pilot light)
(unit: mm)

Standard type

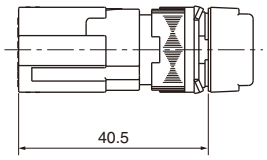

Thin type

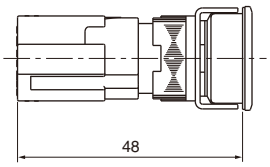

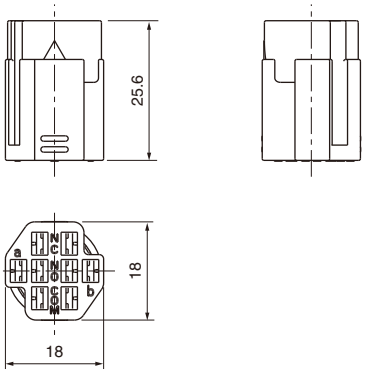

Socket for PC board

KKD08-096

Type	Used with
AR6S692	Illuminated pushbutton switch, pushbutton switch, selector switch, pilot light

By combining with a switch, they can be used as a switch for PC board, connection type switch.
Note: • Dimensions when connected with a switch (pilot light)
(unit: mm)

Standard type

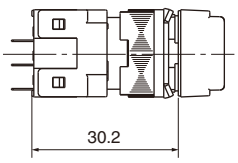

Thin type

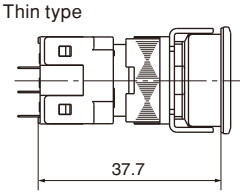

• PC board processing drawing (View from component side)
(unit: mm)

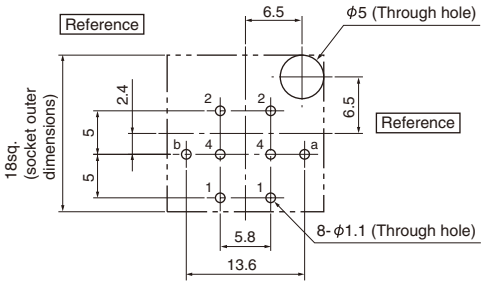

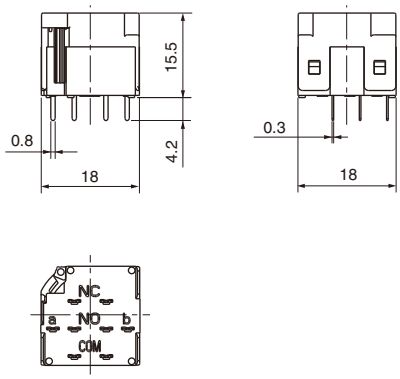

Fuji Electric FA Components & Systems Co., Ltd.
Information subject to change without notice

Wrench

KKD07-257

Type	Used with
AHX601	AR16 and DR16 series AF16 and DF16 series

When installing a Command Switch on a panel, this tool enables secure and firm tightening.

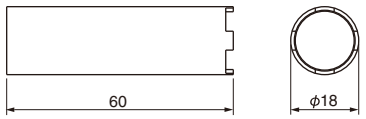

Remover (for Standard type)

KKD07-258

Type	Used with
AHX618	Illuminated pushbutton switch, pushbutton switch, pilot light

This tool is used for removing color lens, buttons or screens.

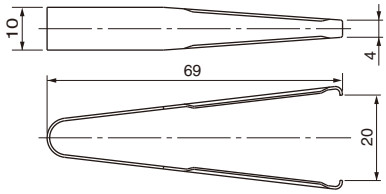

Lamp remover

KKD07-259

Type	Used with
AHX672	Illuminated pushbutton switch, pilot light

This tool is used for installing or removing lamps.
Use the part A to remove LED lamps.

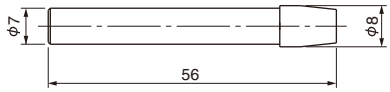

Panel plug (for Standard type)

KKD07-260

KKD07-261

KKD07-262

KKD07-267

Type	Used with
AXH645-□	Rectangular type Degree of protection: IP40
AXH644-□	Square type Degree of protection: IP40
AXH622-□	Round type Degree of protection: IP40
AXH850-B *1	Rectangular type Degree of protection: IP65

*1 Packing and nut are provided. The color is black only.
Note: • Enter the color code in the square box □.

Type	Black	Gray
Code	**B**	**GY**

AHX645

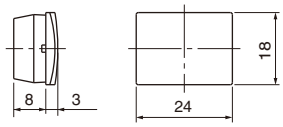

AHX644

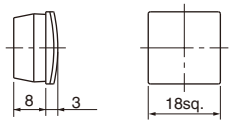

AHX622

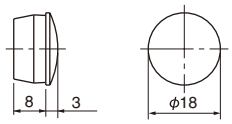

AHX850-B

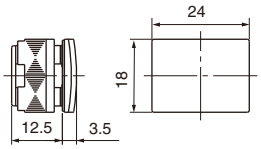

Panel plug (for Thin type)

KKD07-264

KKD07-266

KKD07-265

KKD07-263

KKD07-268

KKD07-269

Type	Used with
AF6Y645-B	Rectangular type Degree of protection: IP40
AF6Y644-B	Square type Degree of protection: IP40
AF6Y622-B	Round type Degree of protection: IP40
AF6Y850-B *1	Rectangular type Degree of protection: IP65
AF6Y851-B *1	Square type Degree of protection: IP65
AF6Y852-B *1	Round type Degree of protection: IP65

*1 Packing, panel retainer, and nut are provided.
Note: • The color is black only.

AF6Y645-B

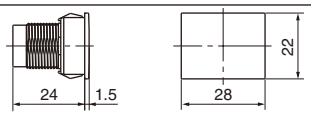

AF6Y644-B

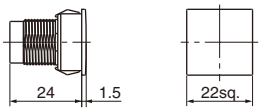

AF6Y622-B

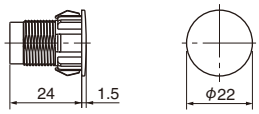

AF6Y850-B

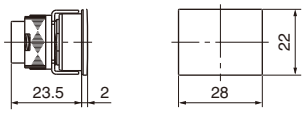

AF6Y851-B

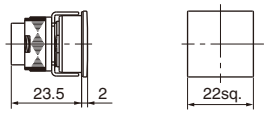

AF6Y852-B

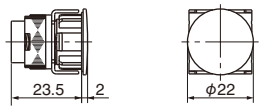

AR16, DR16 and AF16, DF16 Accessories

Description	Type	Dimensions, mm

Color lens and button

KKD07-270

Type	Used with
AR6C633-□	AR16F0N, F5N, F0T, F5T, G0N, G5N, G0T, G5T DR16F0N AF16F0N, F5N, F0T, F5T, Type DF16F0N
AR6C632-□	AR16F0M, F5M, F0S, F5S, Type DR16F0M AF16F0M, F5M, F0S, F5S, Type DF16F0M
AR6C631-□	AR16E0L, E5L, E0R, E5R, Type DR16E0L AF16F0L, F5L, F0R, F5R, Type DF16F0L
DR6C630-□	DR16D0L

Note: Enter the color code in the square box □.

Color	Green	Red	Transparent*	Yellow	Orange	Blue
Code	**G**	**R**	**C**	**Y**	**A**	**S**
Color code of main unit	G	R	W, B	Y	A	S

* When the color code of the main unit is W, a combination of the transparent lens and the white legend plate comes to white (except for dome type).
When it is B, a combination of the transparent lens and the black legend plate comes to black (except for pilot light).
When the dome type (DR16D0L)'s color code of the main unit is W, the lens code is W.

AR6C633

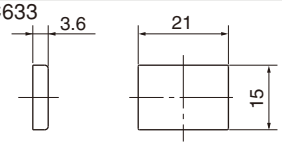

AR6C632

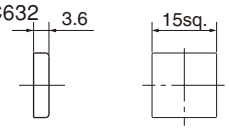

AR6C631

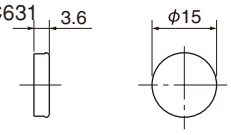

DR6C630

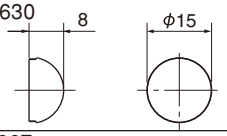

Legend plate

KKD07-272

Type	Used with
AR6P667-□	AR16F0N, F5N, F0T, F5T, G0N, G5N, G0T, G5T DR16F0N AF16F0N, F5N, F0T, F5T, Type DF16F0N
AR6P666-□	AR16F0M, F5M, F0S, F5S, Type DR16F0M AF16F0M, F5M, F0S, F5S, Type DF16F0M
AR6P665-□	AR16E0L, E5L, E0R, E5R, Type DR16E0L AF16F0L, F5L, F0R, F5R, Type DF16F0L

Note: Enter the color code in the square box □.

Type	White	Black
Code	**W**	**B**
Color code of main unit	G, R, W, Y, A, S	B

• When the color code of the main unit is W, a combination of the transparent lens and the white legend plate comes to white.
When it is B, a combination of the transparent lens and the black legend plate comes to black (except for pilot light).

AR6P667

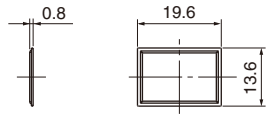

AR6P666

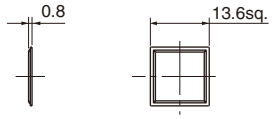

AR6P665

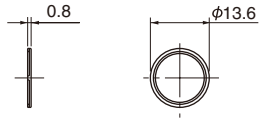

LED lamp

KKD07-273

Type	Lamp operational voltage, current consumption
DR6L695-A□	6V AC/DC, Green, Red, Amber, blue: 7.5mA AC, 7.5mA DC Orange: AC8.5mA, DC8.5mA, Yellow: 17mA AC, 17mA DC
DR6L695-B□	12V AC/DC, Green, Red, Amber, blue: 7.5mA AC, 7.5mA DC Orange, Yellow: 8.5mA AC, 8.5mA DC
DR6L695-E□	24V AC/DC, Green, Red, Amber, blue: 7.5mA AC, 7.5mA DC Orange, Yellow: 8.5mA AC, 8.5mA DC

Note: Enter the color code in the square box □.

Color	Green	Red	Orange	Yellow	Amber	Blue
Code	**G**	**R**	**W**	**Y**	**A**	**S**
Color code of main unit	G	R	W	Y	A	S

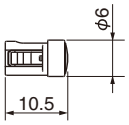

Key

KKD07-274

Type	Used with
AR6C662-□	AR16JT, JS, JR AF16JT, JS, JR

Note: • Enter the color code in the square box □.

Code (Key type)	A	B	C	D	E	F

• Two pieces per set on delivery.
• Both sides of the key is same.

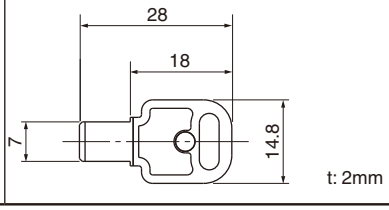

AR16, DR16 and AF16, DF16
Mass

• Standard type <AR16, DR16 series>

1. Illuminated push button switches (g)

Type	Without transformer	
	SPDT	2PDT
AR16F0N	9.3	9.9
AR16F5N	9.3	9.9
AR16G0N	9.4	10
AR16G5N	9.4	10
AR16F0M	8.7	9.3
AR16F5M	8.7	9.3
AR16E0L	8.1	8.7
AR16E5L	8.1	8.7

2. Pushbutton switches (g)

Type	SPDT	2PDT
AR16F0T	8.5	9.1
AR16F5T	8.5	9.1
AR16G0T	8.7	9.3
AR16G5T	8.7	9.3
AR16F0S	8	8.6
AR16F5S	8	8.6
AR16E0R	7.4	8
AR16E5R	7.4	8

3. Pilot lights (g)

Type	Without transformer
DR16F0N	8.7
DR16F0M	8.1
DR16E0L	7.5
DR16D0L	7.5

4. Selector switches (knob type) (g)

Type	SPDT	2PDT
AR16PT	9.6	10.2
AR16PS	8.6	9.2
AR16PR	8.3	8.9

5. Selector switches (key type) (g)

Type	SPDT	2PDT
AR16JT	23.2	23.8
AR16JS	22.3	22.9
AR16JR	21.9	22.5

Note: The value when two keys are attached.

• Thin type <AF16, DF16 series>

1. Illuminated push button switches (g)

Type	Without transformer	
	SPDT	2PDT
AF16F0N	13.5	14.1
AF16F5N	13.5	14.1
AF16F0M	12.8	13.4
AF16F5M	12.8	13.4
AF16F0L	12	12.6
AF16F5L	12	12.6

2. Pushbutton switches (g)

Type	SPDT	2PDT
AF16F0T	12.7	13.3
AF16F5T	12.7	13.3
AF16F0S	12	12.6
AF16F5S	12	12.6
AF16F0R	11.3	11.9
AF16F5R	11.3	11.9

3. Pilot lights (g)

Type	Without transformer
DF16F0N	12.8
DF16F0M	12.1
DF16F0L	11.4

4. Selector switches (knob type) (g)

Type	SPDT	2PDT
AF16PT	14.2	14.8
AF16PS	13.7	14.3
AF16PR	13.1	13.7

5. Selector switches (key type) (g)

Type	SPDT	2PDT
AF16JT	27.8	28.4
AF16JS	27.3	27.9
AF16JR	26.8	27.4

Note: The value when two keys are attached.

AR16, DR16 and AF16, DF16
Rating and specifications/AR16V

Integrated Contacts Structure Emergency stop pushbutton switches AR16V

■ Features

- Up to four sets of contacts in a one-piece structure with a panel depth dimension of 28 mm (non-illuminated type).

Non illuminated type

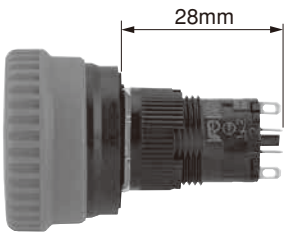

Illuminated type

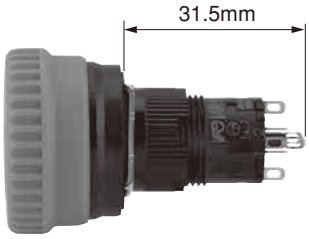

- Both pull or turn reset methods are supported.
- Two button diameters are available: 32 mm (AR16V0) and 40 mm (AR16V1).
- Safety trigger-action mechanism that prevents the contacts from operating until the switch is locked, even if people or objects accidentally come into contact with the switch.
- Direct opening mechanism for NC contacts to ensure that the contacts can be opened even in the unlikely event that they become fused.
- IP65 protection for operating section.

AR16V0R

AR16V1L

- RoHS compliance (EU Directive 2002/95/EC) is a standard feature.
- Compliance with UL/CSA standards, China Compulsory Certification (CCC) standards, and TÜV (EN standards).
- CE marking.

■ Specifications (indoor use)

Item		AR16V
Rated insulation voltage Ui		250V AC/DC
Durability	Mechanical	100,000 operations
	Electrical	100,000 operations (AC-15, AC-13, AC-12, DC-13, DC-12)
Operating frequency		1200 operations / hour (On-load factor : 40%)
Withstand voltage	Between live section and grounding	2000V AC, 1 minute
	Between opposite polarity live sections	2000V AC, 1 minute
Insulation resistance		100MΩ or more (500V DC megger)
Rated impulse withstand voltage Uimp		2.5kV
Conditional short-circuit current		1000A
Short-circuit protective device		gG 6A (IEC60269 Fuse)
Pollution degree		3
Vibration		Operating extremes : frequency 10 to 500 Hz, double amplitude 0.7mm acceleration 50m/s^2 Damage limits : frequency 10 to 500 Hz, double amplitude 0.7mm acceleration 50m/s^2
Shock		Malfunction durability : 100m/s^2 Mchanical durability : 500m/s^2
Operational ambient temperature		-10 to +55°C (no icing or no condensation)
Storage temperature		-40 to +70°C
Relative humidity (inside control panel)		45 to 85%RH (-5 to 40°C) (no icing or no condensation)
Degree of protection of operating (displaying) section		IP65 (dust-ploof, water jet proof): IEC 60529
Degree of protection of control section		IP2X (Terminal cover : AR6Y262, At the connection)
Terminal style		Solder terminal
Connectable wire		0.75mm^2 maximun (18AWG maximun)

■ Contact ratings

• TÜV (EN60947-5-1), JIS C 8201-5-1 (1999)

Conventional free air thermal current I th	Rated operational current					
	Rated operational voltage Ue	AC			DC	
		AC-12 (Resistive load)	AC-13 (Inductive load)	AC-15 (Inductive load)	DC-12 (Resistive load)	DC-13 (Inductive load)
5A	24V	—	—	—	1.0A	0.7A
	120V	1.5A	1.0A	0.3A	—	—
	125V	—	—	—	0.2A	0.15A
	240V	1.0A	0.7A	0.3A	—	—

• UL/CSA

• AC (COSø=0.35)

Contact rating code	120V		240V	
	Making current	Braeking current	Making current	Braeking current
C300	15A	1.5A	7.5A	0.75A

• DC ($T_{0.95}$=6P)

Contact rating code	Making current · Braeking current	
	125V	250V
R300	0.22A	0.11A

■ Contact reliability

• FUJI has confirmed that the product can be used in 1mA circuit conditions at 5V AC or DC. The operable range, however, may vary deperding on the operational ambient conditions and type of load.

■ Operating characteristic

Operation	Push-lock, turn-reset or pull-reset
Ave. required operating force	25N
Operating travel	Approx. 5.4mm
Operation angle	Approx. 45°
Required return force (pull-reset)	20N
Required return force (tarn-reset)	0.3N • m

■ Mass

(g)

Type	1NC	2NC(1NO+1NC)	4NC(2NO+2NC)
AR16V0R	19.0	19.4	20.0
AR16V1R	21.1	21.5	22.1
AR16V0L	19.7	20.1	20.7
AR16V1L	21.8	22.2	22.8

■ Standards approved

UL508	cUL File No. E44592
CSA C22.2 No.14	
TÜV : EN60947-5-1, EN60947-5-5	R50136611

■ Lamp rating and current consumption

Applied method	Type of lamp	Luminous color	Lamp rated voltage	Current consumption
Without transformer	LED lamp	Red	6V AC/DC	9mA AC, 7.5mA DC
			12V AC/DC	7.5mA AC, 7.5mA DC
			24V AC/DC	7.5mA AC, 7.5mA DC

AR16, DR16 and AF16, DF16
Type numbers/AR16V

■ Type

• Emergency stop pushbutton switches

Operator	Contact	Type
Unibody push-lock, pull or turn-reset (32mm dia.)	1NC	AR16V0R-01R
	1NO+1NC	AR16V0R-11R
	2NC	AR16V0R-02R
	1NO+2NC	AR16V0R-12R
	3NC	AR16V0R-03R
	1NO+3NC	AR16V0R-13R
(KKD08-090)	4NC	AR16V0R-04R
Unibody push-lock, pull or turn-reset (40mm dia.)	1NC	AR16V1R-01R
	1NO+1NC	AR16V1R-11R
	2NC	AR16V1R-02R
	1NO+2NC	AR16V1R-12R
	3NC	AR16V1R-03R
	1NO+3NC	AR16V1R-13R
(KKD08-092)	4NC	AR16V1R-04R

• Emergency stop illuminated pushbutton switches

Operator	Contact	LED Lamp Type
Unibody push-lock, pull or turn-reset (32mm dia.)	1NC	AR16V0L-01■R
	1NO+1NC	AR16V0L-11■R
	2NC	AR16V0L-02■R
	1NO+2NC	AR16V0L-12■R
	3NC	AR16V0L-03■R
	1NO+3NC	AR16V0L-13■R
(KKD08-087)	4NC	AR16V0L-04■R
Unibody push-lock, pull or turn-reset (40mm dia.)	1NC	AR16V1L-01■R
	1NO+1NC	AR16V1L-11■R
	2NC	AR16V1L-02■R
	1NO+2NC	AR16V1L-12■R
	3NC	AR16V1L-03■R
	1NO+3NC	AR16V1L-13■R
(KKD08-091)	4NC	AR16V1L-04■R

• Voltage Replace the ■mark by the lamp voltage code

Lamp voltage	Code
6V AC/DC	A3
12V AC/DC	B3
24V AC/DC	E3

■ Dimensions, mm

• Emergency stop pushbutton switches

• AR16V0R

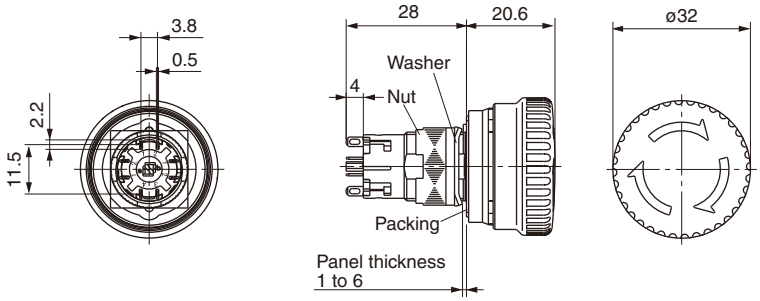

• AR16V1R

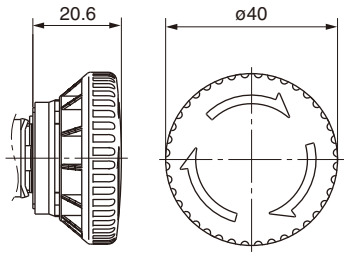

• Emergency stop illuminated pushbutton switches

• AR16V0L

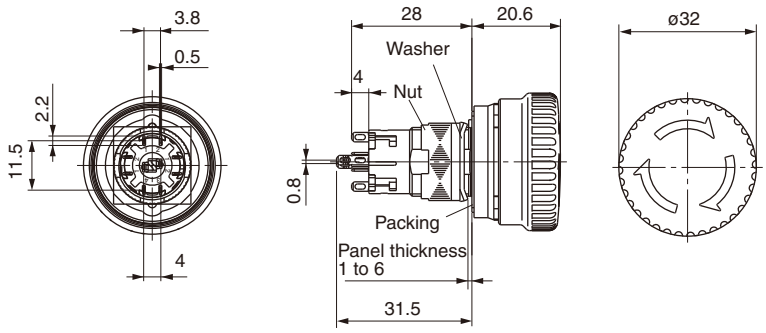

• AR16V1L

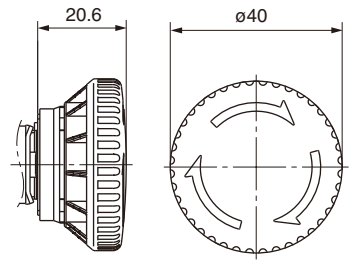

■ Accessories

Description	Type	Dimensions, mm
Wrench (KKD07-257)	**AHX601 (AH9A601)** When installing a command switch on a panel, this tool is useful for tightening the switch firmly and efficiently.	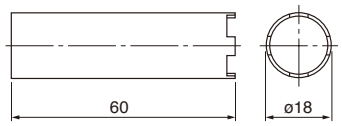
Terminal cover	**AR6Y262** Protective cover for insulation between terminals and live parts. Note : Dimensions when connected with a switch (unit : mm) 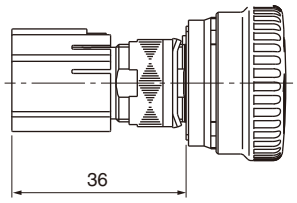 • Wiring work should be made first , and attach the cover to the switch.	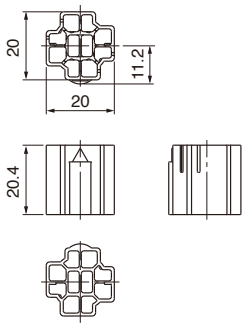
Legend plate for AR16V emergency stop	**AR6P719-*1,2** • Plate color : Yellow • Letter color : Black	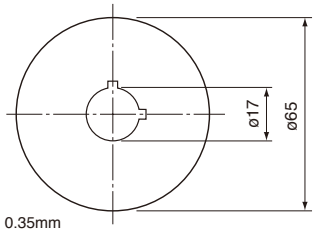 Thickness : 0.35mm

Legend	code (*1, 2)	Letter hight
Black	00	—
EMERGENCY STOP	5A	7mm

AR16, DR16 and AF16, DF16
Notes on use/AR16V

■ Notes on use

Safety Precautions

Read the Operating Instructions carefully before mounting, wiring, operating, servicing, or inspecting the command switch. Make sure that the Operating Instructions is delivered to the final user of the command switch.
• The safety precautions are classified into two levels, "**WARNING** and **CAUTION**", with meanings described follows.

⚠ WARNING: Indicates a potentially hazardous situation, which, if not avoided, could resuit in death or serious injury.

⚠ CAUTION: Indicates a potentially hazardous situation, which, if not avoided, may result in minor or moderate injury and/or damage to the equipment.

An item described under "**CAUTION**" may resuit in a serious accident, depending on the situation.

⚠ WARNING

• Do not touch or approach any live part while power is supplied. An electric shock or burning may result.
• Be sure to turn off the power before mounting, dismounting, wiring, or inspecting, the product.
An electric shock, burning from short-circuiting, or equipment malfunction may result.

⚠ CAUTION

• Wire the product according to the wiring instructions in the Operating Instructions. Make sure that the size of the wires is suitable for the voltage and applied current.
The wrong wiring may result in fire, accidents, or malfunctions.
• Treat the product as industrial waste when it is to be discarded.

■ Panel cutout (mm)

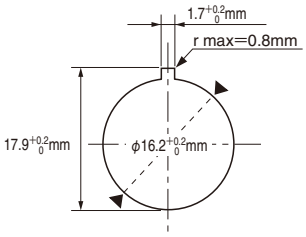

■ Applicable panel thickness

The applicable panel thickness is 1 to 6 mm. When the terminal cover (AR6Y262) is used, however, the applicable panel thickness will be 1 to 3.2 mm.

■ High-density mounting

The following minimum mounting pitch applies to high-density mounting.

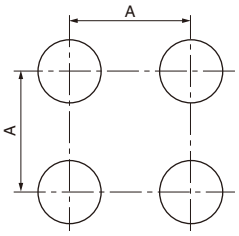

Type	Dimension A
AR16V0□	41mm min.
AR16V1	45mm min.
With AR6P719	65mm min.

Note : Detemine the mounting pitch by taking the operability and wiring workability into consideration.

• Installation on panel

As shown in the figure below, insert the switch main unit into the panel cutout from the front of the panel with the top of the switch main unit (marked with an inverted triangular) facing upward. Then, use a tightening wrench (AHX601) and secure the unit with a washer and tightening nut from the rear of the panel.
Note : The proper tightening torque is 0.6 to 1.0 N・m.

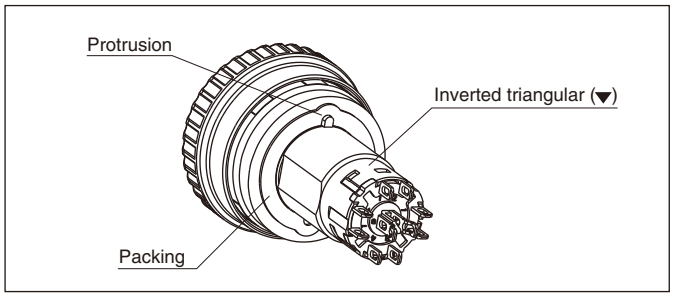

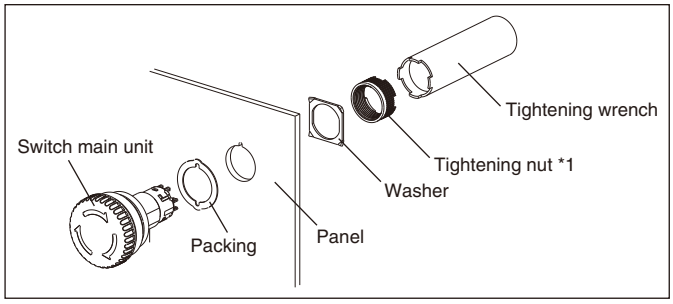

*1 : Do not use pliers or other improper tools tighten the nut, and do not tighten it excessively, or the nut may be damaged or switch may malfunction.

■ Wiring

●The wiring to this switch must be soldered. Keep the following items in mind when soldering.
• Type of solder : Use resin-core solder.
• Use a soldering iron with a maximum power consumption of 60W (350°C) within five seconds. Make sure that the terminals is free of tension during soldering. Also, do not deform the terminal.
●Lead-free solder has a high melting point, but the specific melting point depends on the type of lead-free solder. This may cause difficulty in soldering. Be careful not to overheat the solder if a soldering iron with a large soldering tip or a large heating capacity is used. Keep in mind that overheating the solder may resuit in product malfunctioning.
●Connectable wires
One Solid wires with a maximum diameter of 1.0mm
One standed wire with a maximum area of 0.75 mm^2
●For wiring to adjacent terminals, use the terminal cover (AR6Y262) to prevent short-circuit, or an insulation tube to assure isolation. Care is necessary when two wires are connected together or a large quantily of solder is applied. In addition, keep in mind that overheating the tube may result in product malfunctioning if a heat-shrinking tube is used.

• Terminal arrangement

Model	Circuit diagram (example)	Terminal arrangement (view from the terminal (back) side)
Emergency stop pushbutton switches	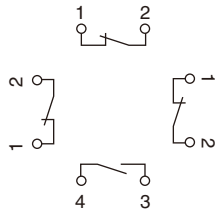	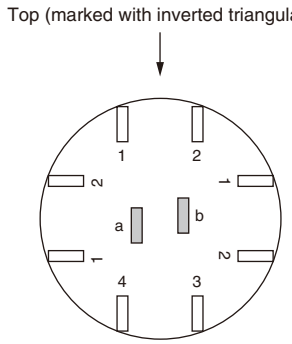
Emergency stop illuminated pushbutton switches	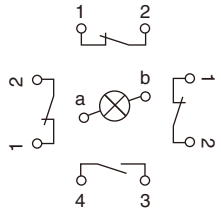	Terminals 1-2 : b (NC) contact terminals Terminals 3-4 : a (NO) contact terminals Terminals a-b : Lamp terminals

Note : If NO contacts are uesd in the contact configuration, they will be on the top of the unit (marked with the inverted triangular) and on the opposite side, regardless of the number of contacts.

■ Terminal caver (AR6Y262)

• Combination

The terminal cover must be attached in the correct direction. Make sure that the triangular on the terminal cover is aligned with the inverted triangular on the top of the unit. Also, when wiring the switch, check the alignment of these triangles and insert the wires correctly through the corresponding holes in the terminal cover.

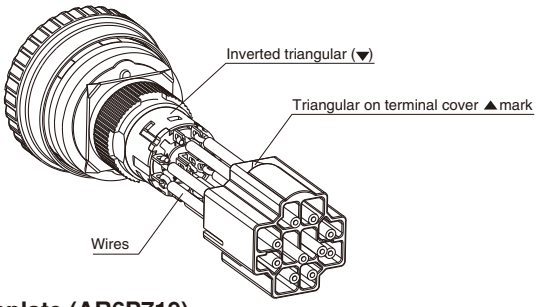

■ Nameplate (AR6P719)

• Precautions

The nameplate must be attached. Attach the nameplate to an appropriate part, such as the panel, after removing the paper from the back of the nameplate.

Before attaching the nameplate, claen the surface to which the nameplate will be attached with alcohol.

The nameplate may come off if the surface is dirty or oily.

• Attachment Procedure (Example)

Remove portions ① and ② from the center of the nameplate, aligh the nameplate with the panel cutout, and lightly press on the front surface of the nameplate to attach it to the panel. Then remove portions ③ and ④ , and press on the entire front surface of the nameplate to complate attaching it to the panel.

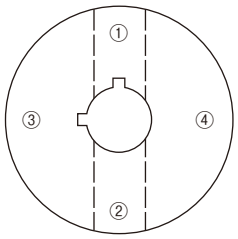

■ Others

Operation

• Do not hit or flip the button, or the button may be damaged. Be sure to operate the button by hand.
• To unlock the switch, turn the button approximately 45° clockwise (in the direction of the arrow) or pull out the button. Do not operate or handle the button with excessive force.
• Do not lock the emergency stop pushbutton switch during normal use. Push and lock the switch only in an emergency.

Storage and Usage Locations

• Be sure to use and store the product within the rated ambient temperature and humidity ranges.
• Although the product resists ordinary cutting oils and coolant oils, do not use the unit in places where special oils may be sprayed onto the product.
• If dusts or filings accumulate in the gap between the button and the frame, the switch may fail to operate normally.
• This switch are for indoor use. Make sure that the product is not exposed to direct sunlight.
• Do not use the product in the places thet are subject to the adverse effects of ozone or corrosive gases.

AH164, AH165 and AH165-2
General information

■ Features

Design basis

The 16mm dia. series of compact size pushbuttons are 'finger-size', and consequently take up little panel space. AH165-2 series operators are about twice as large as the AH164 and AH165 series operators for easier operation. With many types of operator available, the most suitable switch can be identified by color, shape and legend, and have a smooth, quality "snap-action". In spite of their small size they have a highly reliable mechanism, and are eminently suited for solid state and other electronic circuits. AH164, AH165 and AH165-2 series contact block holders can easily be removed manually. Moreover, the contact block can be easily attached or detached without using any special tools, thus facilitating addition or replacement of contact.

Selector switches

Selector switches can also be supplied in either knob-handle operated or key operated types.

Strong construction

The operator and contact blocks are molded from an excellent thermal resistance resin and can withstand the heat at the time of soldering.
Since these pushbuttons are manufactured to industrial standards they can withstand vibration or shock thus eliminating lamp failure due to such causes as loose bases.
With regard to the degree of protection, standard types which met the requirements of IP40 of IEC 60529, and oil tight types which meet the requirements of IP65 of the said, are available. This permits the application to various fields, from machine tools to OA (Office Automation) facilities.

Quality feel tough

Both the operator and contact block are precisely engineered. There is no fear of the switch malfunction even after long use and it continues to operate smoothly for its service life of about 1,000,000 operations.

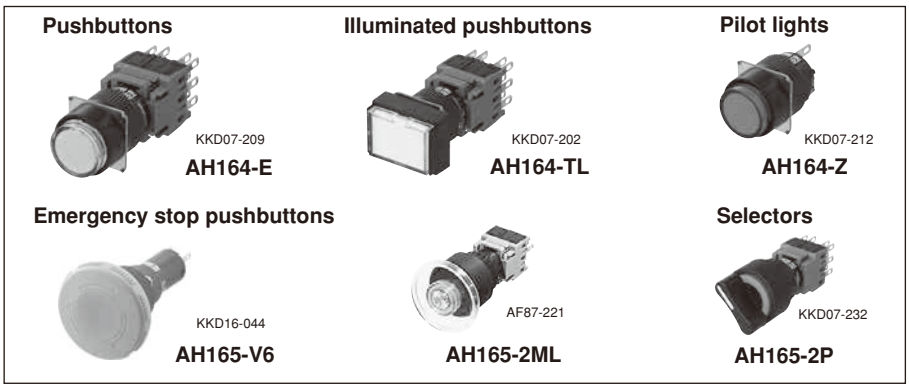

Easy color change

Color lenses fit over the inner button. The lens can easily be removed using a small screwdriver

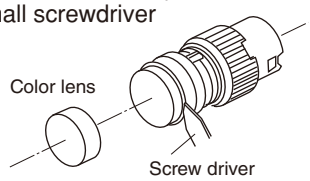

Note: The luminous color of LEDs and neon illumination types varies with the body color of the product.

Visible inscription

Button legends are printed on legend sheet, which is stuck to the legend plate on the inner button.
The lettering is back lit by the switch lamp and the inscription is highly visible through the color lens.
Contact FUJI for your lettering requirements.

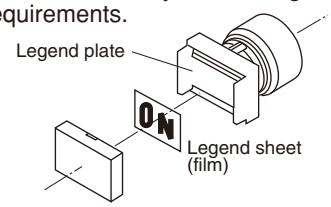

Excellent switch reliability

The switch uses a snap-action mechanism. The pushbuttons are available with either momentary or alternative actions. The snap-action switch has a double break movement which operates independently of the speed of switching. The contacts are made from gold-flashed silver. High contact reliability of 1mA at 5V AC/DC is assured. Contact blocks are available in 1NO+1NC to 3NO+3NC arrangement.

Large terminals

Solder/tab terminal is provided as standard. Wire-wrap terminal is available on reguest.

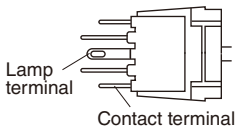

Safety

FUJI's original Trigger Action mechanism is used in the emergency stop pushbuttons. They are suitable for emergency stop and safety. This mechanism prevents the contacts from moving until the button is pushed and locked.

- Provided with a trigger action mechanism conforming to EN418.
- Provided with direct opening action (approved by TÜV) conforming to EN60947-5-1 and EN60947-5-5.

Alternate action

In the case of alternate action when the button is depressed the contacts are maintained and remain so even if the finger is removed. The button will not return to its free position. In order to remove the lock, the button must be given a second pressure before the button will return to its free position. This makes it most suitable as the switch for a power source.

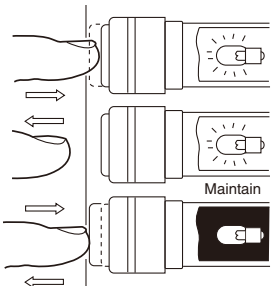

Pushbutton with finger guards

Finger guards are provided for square or rectangular type pushbuttons (SF, TF, SL and TL types) in order to prevent operational error of adjacent buttons.

Approvals

For further information related to approved type, *see page C1-191 to C1-196.*

AH164 (standard) / AH165 (oil-tight)

■ Illuminated pushbutton switches

Operator	Type	Operator	Type	Operator	Type
Extended round head *See page C1-199*	**AH164-L, L5** **AH164-TL, TL5** KKD07-205	Flush square head *See page C1-199*	**AH164-SL, SL5** **AH165-L, L5** 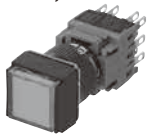 KKD07-204	Flush rectangular head *See page C1-199*	**AH165-SL, SL5** **AH165-TL, TL5** 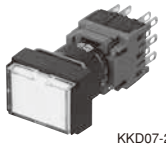 KKD07-202
Flush rectangular head with guard *See page C1-200*	**AH164-TGL, TGL5** **AH165-TGL, TGL5** 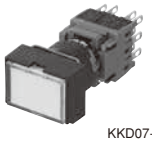 KKD07-203	Flush square head *See page C1-1200*	**AH164-SGL, SGL5** **AH165-SGL, SGL5** 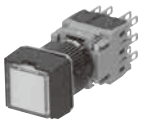 KKD05-075b		

Note: Spot LED and red/green LED types: Not approved standard

■ Pushbutton switches

Operator	Type	Operator	Type	Operator	Type
Extended round head *See page C1-203*	**AH164-E, E5** **AH165-E, E5** KKD07-209	Mushroom head *See page C1-203*	**AH164-M, M5** **AH165-M, M5** KKD07-210	Flush square head *See page C1-203*	**AH164-SF, SF5** **AH165-SF, SF5** KKD07-208
Flush rectangular head *See page C1-203*	**AH164-TF, TF5** **AH165-TF, TF5** 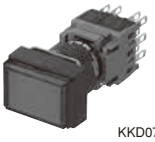 KKD07-206	Flush rectangular head with guard *See page C1-203*	**AH164-TGF, TGF5** **AH165-TGF, TGF5** 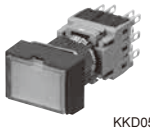 KKD05-176	Flush square head with guard *See page C1-203*	**AH164-SGF, SGF5** **AH165-SGF, SGF5** 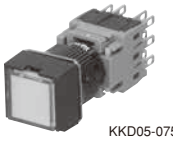 KKD05-075b
Convex square head *See page C1-203*	**AH164-SM, SM5** **AH165-SM, SM5** KKD05-081b	Convex rectangular head *See page C1-203*	**AH164-TM, TM5** **AH165-TM, TM5** KKD05-082b	Push-lock, turn-reset (32mm dia.) ⊖ (Direct opening action) See page C1-204	**AH165-VR** KKD18-318
Push-lock, turn-reset (40mm dia.) ⊖ (Direct opening action) *See page C1-204*	**AH165-V1R** KKD18-317				

■ Emergency stop pushbutton switches ⊖ (Direct opening action), conform to EN418

Operator	Type	Operator	Type
Push-lock, turn-reset (32mm dia.) *See page C1-204*	**AH165-V5R** KKD16-043	Push-lock, turn-reset (40mm dia.) *See page C1-204*	**AH165-V6R** KKD16-044

Note: (CCC): *See page C1-295*

AH164, AH165 and AH165-2
Quick reference guide

■ Selector switches

Operator	Type	Operator	Type	Operator	Type
Knob with rectangular bezel *See page C1-205*	**AH164-P** **AH165-P** KKD07-213	Knob with square bezel *See page C1-205*	**AH164-SP** **AH165-SP** KKD07-215	Key with rectangular bezel *See page C1-205*	**AH164-J** **AH165-J** KKD09-001L
Key with square bezel *See page C1-205, C1-208*	**AH164-SJ** **AH165-SJ** KKD09-001R	Key with rectangular bezel ⊖ (Direct opening action) *See page C1-206*	**AH165-JM** KKD09-006	Key ⊖ (Direct opening action) *See page C1-206*	**AH165-RJM** KKD09-007

■ Pilot lights

Lens	Type	Lens	Type	Lens	Type
Extended round *See page C1-210*	**AH164-Z** **AH165-Z** KKD07-212	Flush square *See page C1-210*	**AH164-ZS** **AH165-ZS** KKD05-094b	Flush rectangular *See page C1-210*	**AH164-ZT** **AH165-ZT** KKD07-211
Dome *See page C1-210*	**AH165-ZM** KKD13-069				

■ Buzzers

Sound	Type	Sound	Type	Sound	Type
Standard *See page C1-212*	**AH164-TX** KKD13-070	Loud sound *See page C1-212*	**AH164-TX1** KKD13-075	Loud sound with volume control *See page C1-212*	**AH164-TX2B** KKD07-223
Standard sound with volume control (IP54) *See page C1-212*	**AH165-X** KKD05-096b				

Note: (CCC) : *See page C1-295*

AH165-2 (oil-tight)

■ Illuminated pushbutton switches

Operator	Type	Operator	Type	Operator	Type
Flush round head *See page C1-217*	**AH165-2FL, 2FL5** KKD07-225	Extended round head *See page C1-217*	**AH165-2EL, 2EL5** KKD07-226	Mushroom head *See page C1-217*	**AH165-2ML** AF87-221
Mushroom head with square bezel *See page C1-217*	**AH165-2YML** AF87-220	Flush square head *See page C1-218*	**AH165-2SFL, 2SFL5** KKD07-224	Extended square head *See page C1-218*	**AH165-2SEL, 2SEL5** KKD18-308
Concave square head *See page C1-218*	**AH165-2SCL, 2SCL5** KKD18-307	Push-lock, turn-reset *See page C1-219*	**AH165-2VL** KKD18-311	Push-lock, turn-reset with square bezel *See page C1-219*	**AH165-2YVL** KKD18-314

Note: : *See page C1-292*

■ Pushbutton switches

Operator	Type	Operator	Type	Operator	Type
Flush round head *See page C1-220*	**AH165-2F, 2F5** KKD07-228	Extended round head *See page C1-220*	**AH165-2E, 2E5** KKD07-229	Mushroom head *See page C1-220*	**AH165-2M** KKD18-305
Mushroom head with square bezel *See page C1-220*	**AH165-2YM** AF87-214	Flush square head *See page C1-220*	**AH165-2SF, 2SF5** KKD07-224	Concave square head *See page C1-220*	**AH165-2SCE, 2SCE5** KKD18-307
Extended square head *See page C1-220*	**AH165-2SE, 2SE5** KKD18-308	With selector ring *See page C1-221*	**AH165-2S2** KKD18-306	With selector ring with square bezell *See page C1-221*	**AH165-2YS2** KKD18-313
Push-lock, turn-reset *See page C1-221*	**AH165-2V** KKD18-312	Push-lock, turn-reset with square bezel *See page C1-221*	**AH165-2YV** KKD18-315		

AH164, AH165 and AH165-2
Quick reference guide

■ Selector switches

Operator	Type	Operator	Type	Operator	Type
Knob *See page C1-222*	**AH165-2P** KKD07-232	Knob with square bezel *See page C1-222*	**AH165-2YP** KKD07-234	Key *See page C1-222*	**AH165-2J** KKD09-003L
Key with square bezel *See page C1-222*	**AH165-2YJ** KKD09-003R	Lever *See page C1-223*	**AH165-2H** KKD18-304	Lever with square bezel *See page C1-223*	**AH165-2SH** KKD18-309

■ Illuminated selector switches

Operator	Type
Knob *See page C1-222*	**AH165-2PL** KKD07-240

■ Pilot lights

Lens	Type	Lens	Type	Lens	Type
Flush round *See page C1-226*	**AH165-2Z** KKD18-316	Extended round *See page C1-226*	**AH165-2ZE** KKD07-231	Flush square *See page C1-226*	**AH165-2SZ** KKD07-230
Extended square *See page C1-226*	**AH165-2SZE** KKD18-310				

Note: (CCC) : *See page C1-296*

AH164 and AH165
Type number nomenclature

■ Type number nomenclature

Pushbuttons, illuminated pushbuttons and pilot lights

AH165	-	L	R	11	E	3	–	W
①		②	③	④	⑤	⑥		⑦

① Product category
AH164: Standard (IP40)
AH165: Oil-tight (IP65)

② Operator or lens
• Operator for illuminated pushbutton
SL: Flush square head
SL5: Flush square head (Alternate)
TL: Flush rectangular head
TL5: Flush rectangular head (Alternate)
L: Extended round head
L5: Extended round head (Alternate)
TGL: Flush rectangular head with guard
TGL5: Flush rectangular head with guard (Alternate)
SGL: Flush square head with guard
SGL5: Flush square head with guard (Alternate)

• Operator for pushbuttons
SF: Flush square head
SF5: Flush square head (Alternate)
TF: Flush rectangular head
TF5: Flush rectangular head (Alternate)
E: Extended round head
E5: Extended round head (Alternate)
TGF: Flush rectangular head with guard
TGF5: Flush rectangular head with guard (Alternate)
SGF: Flush square head with guard
SGF5: Flush square head with guard (Alternate)
M: Mushroom head
M5: Mushroom head (Alternate)
SM: Convex square head
SM5: Convex square head (Alternate)
TM: Convex rectangular head
TM5: Convex rectangular head (Alternate)
V: Push-lock, turn-reset (32mm dia.)*1 *2
V1: Push-lock, turn-reset (40mm dia.)*1 *2

• Operator for emergency stop pushbuttons
V5: Push-lock, turn-reset (32mm dia.)*2
V6: Push-lock, turn-reset (40mm dia.)*2

• Lens for pilot lights
Z: Extended round
ZS: Flush square
ZT: Flush rectangular
ZM: Dome

Note: *1 Product with no trigger action mechanism
*2 AH165 type only, direct opening action

③ Color of button or lens

Code	color	Button	LED	Incandescent	Neon
G	Green	○	○	○	○
R	Red	○	○	○	○ (Orange)
B	Black*	○	–	–	–
Y	Yellow	○	○	○	○ (Orange)
W	White	○	○ (Orange)	○	○ (Orange)
S	Blue	○	○	○	○ (Green)
O	Orange	○	○ (Amber)	○	○
RG	Red/Green	–	○	–	–

Notes: • ( ): indicates luminous color
• AH165-V, V1, V5, V6: Red only
* Not available for illuminated types

④ Contact arrangement
01: 1NC*1
02: 2NC*1
11: 1NO+1NC
22: 2NO+2NC
33: 3NO+3NC*2

Notes: *1 Available for AH165-V, V1, V5, V6
*2 Not available for with transformer types

⑤ Lamp voltage

Code	LED	Incandescent*2	Neon*2
AA	5V DC*2	–	–
A	6V DC*2	5V AC/DC	–
B	12V DC	12V AC/DC	–
E	24V DC	24V AC/DC	–
H	100-110V AC*1 *2	100-110V AC*1	110V AC
K	–	–	120V AC
M	200-220V AC*1 *2	200-220V AC*1	220V AC
P	–	–	240V AC

Notes: *1 With transformer (LED: 24V, Incandescent: 28V)
*2 Not available AH165-ZM
• ZM type: LED lamp only (12, 24V DC)

⑥ Type of lamp
Blank: Incandescent
1: Neon
2: Spot LED, LED (ZM types)
3: Flat LED

⑦ Terminal
Blank: Solder/tab
W: Wire-wrap
S: Soder (AH165-V, V1, V5, V6 types only)
Note: ZM types: wire-wrap terminal only (Code is blank)

AH164 and AH165
Type number nomenclature

■Type number nomenclature

Selector switches

AH165 - J 2 B 11 A – W
① ②③④ ⑤ ⑥ ⑦

① **Product category**
AH164: Standard (IP40)
AH165: Oil-tight (IP65)

② **Operator**
• 2-position, 3-position (operating angle 90˚)
SP: Knob with square bezel
P: Knob with rectangular bezel
SJ: Key with square bezel
J: Key with rectangular bezel
JM: Key with rectangular bezel (Direct opening action) *
RJM: Key (Direct opening action) *
Note: * AH165 types (2-position) only

• 3-position (operating angle 45˚)
SPK: Knob with square bezel
PK: Knob with rectangular bezel
SJK: Key with square bezel
JK: Key with rectangular bezel

③ **Operation**
2: 2-position, maintained
0: 2-position, spring return*
3: 3-position, maintained
6: 3-position, spring/manual return (Left to center)
7: 3-position, spring/manual return (Right to center)
1: 3-position, spring return
Note: * Except for JM and RJM types

④ **Color of knob or key removable position**
• Color of knob
B: Black

• Key removable position

Code	2-position		3-position (operating angle 90˚)				3-position (operating angle 45˚)			
	2	0	1	3	6	7	1	3	6	7
A	↖	↖	–	←	–	←	–	↖	–	↖
B	⊗	–	–	↔	–	–	–	⊗	–	–
C	–	–	–	✚	–	–	–	✱	–	–
D	↗	–	–	→	–	–	–	↗	–	–
E	–	–	↑	–	–	–	↑	–	–	–
F	–	–	–	–	–	–	–	↗	–	–
G	–	–	–	–	–	–	–	↖	–	↖

⑤ **Contact arrangement**
11: 1NO+1NC
22: 2NO+2NC
33: 3NO+3NC*
Note: * Except for JM and RJM types.

⑥ **Key type No.**
A (standard), B, C, D, E, F

⑦ **Terminal**
Blank: Solder/tab
W: Wire-warp
Note: JM, RJM types: Solder/tab terminal only

Buzzers

AH164 - T X B E
① ② ③④

① **Product category**
AH164: Standard (IP00)
AH165: Splash-proof (IP54)

② **Sound**
TX: Standard (AH164)
TX1: Loud sound (AH164)
TX2: Loud sound with volume control (AH164)
X: Standard sound with volume control (AH165)

③ **Color of head**
B: Black

④ **Operating voltage**
ADC: 6V DC*2
A: 6V AC/DC*1
E: 12 to 24V AC/DC
Notes: *1 Except for TX and TX1 types
*2 Except for TX2 and X types

AH164 and AH165
Ratings and specifications

■ Standards approved

UL508	File No. E44592
CSA C22.2 No.14	File No. LR20479 (except for AH165-ZM) File No. LR84365 (for AH165-ZM)
TÜV: EN60947-5-1	Pushbutton (except for AH165-V, V1), Illuminated pushbutton: R9250087 Pushbutton (for AH165-V, V1): J9551059 Selector (except for AH165-JM, RJM): R9250088 Selector (for AH165-JM, RJM): J9551059 Pilot lights: R9250089 Buzzer: J9950092 (for AH164-TX2, AH165-X)
TÜV: EN60947-5-1 EN60947-5-5	Emergency stop pushbutton: R9950093

■ Specifications (Indoor use)

• Pushbutton switches, illuminated pushbutton switches selector switches, pilot lights

Item	AH164	AH165
Rated insulation voltage	250V AC/DC	
Ambient temperature (no condensation or no icing)	–20 to +70°C *1	–10 to +70°C *2
Humidity	45 to 85%RH (at –5 to +40°C), no condensation or no icing	
Durability (operations) Mechanical	Pushbutton switch Momentary action: 1 million Alternate action: 250,000 Push-lock, turn-reset: 100,000 Selector switch: 250,000 *3	
Electrical	100,000 (220V AC 0.7A)	
Dielectric strength	2000V AC, 1 minute (Between lamp and contact terminals: 1500V AC, 1 minute)	
Conditional short-circuit current	1000A	
Short-circuit protective device	Fuse 1A *4	
Pollution degree	3	
Vibration	Resonance: 10 to 55Hz, double amplitude 0.1mm *5 Constant: 16.7Hz, double amplitude 3mm	
Shock	Malfunction durability: 100m/s^2 *6 Mechanical durability: 500m/s^2	
Operating frequency	1200 operation/hour (on-load factor: 40%)	
Insulation resistance	100MΩ or more (500V DC megger)	
Degree of protection	IP40	IP65

Notes: *1 For illuminated pushbutton switch and pilot light: –20 to +55°C
*2 For illuminated pushbutton switch and pilot light: –10 to +55°C
*3 Key insertion/removal durability for selector switch key types: 10,000
*4 AH165-V, V1, JM, RJM, V5, V6 types: Fuse 5A
*5 Emergency stop type: 10 to 500Hz, double amplitude 0.7mm (acceleration 50m/s^2), according to the test condition of EN60947-5-5 (1998)
*6 Emergency stop type:150m/s^2

• Buzzers

Item	AH164-TX	AH164-TX1
Rated insulation voltage	60V AC/DC	
Operating voltage	6V DC,12 to 24V AC/DC	
Sound level	80dB (0.1m) 60dB(1m)	90dB (0.1m) 70dB(1m)
Durability	1000h	
Frequency	2 ±0.5kHz	2.4 to 3.3kHz
Intermittent cycle	Approx. 170 cycle/minute	
Current consumption	7mA(24 DC) 15mA(6V DC) 20mA (24V AC)	15mA (24, 48V DC) 25mA (6V DC) 30mA (24V AC)
Dielectric strength	1000V AC, 1 minute	
Insulation resistance	100MΩ or more (500V DC megger)	
Ambient temperature	–20 to +60°C (no condensation or no icing)	
Humidity	45 to 85%RH (at –5 to +40°C)	
Operator protection	IP00	

Item	AH164-TX2	AH165-X
Rated insulation voltage	60V AC/DC	
Operating voltage	6V AC/DC, 12 to 24V AC/DC	
Sound level	70dB to 90dB (0.1m) 50dB to 70dB (1m)	60dB to 80dB (0.1m) 40dB to 60dB (1m)
Durability	1000h	
Frequency	2.4 to 3.3kHz	
Intermittent cycle	Approx. 170 cycle/minute	
Current consumption	30mA (6V DC) 20mA (24V DC) 40mA (6, 24V AC)	
Dielectric strength	1000V AC, 1 minute	
Insulation resistance	100MΩ or more (500V DC megger)	
Ambient temperature	–20 to +60°C (no condensation or no icing)	
Humidity	45 to 85%RH (at –5 to +40°C)	
Degree of protection	IP00	IP54

AH164 and AH165
Ratings and specifications

■ Contact ratings

• UL/CSA standards

Rated thermal current	Rated operational voltage	Maximum current	
		AC (Res. load)	DC (Res. load)
5A	24V	–	1.0A
	125V	–	0.2A
	250V	5.0A	–

• EN standards (TÜV approved)

Rated thermal current	Rated operational voltage	Rated operational current				
		AC 15 (Ind. load)	AC 13 (Ind. load)	AC 12 (Res. load)	DC 13 (Ind. load)	DC 12 (Res. load)
5A	24V	–	–	–	0.7A	1.0A
	100 to 120V	0.3A	1.0A	1.5A	–	–
	100 to 125V	–	–	–	0.15A	0.2A
	200 to 240V	0.3A	0.7A	1.0A	–	–

C1

■ Lamp ratings

Rated operational voltage	Consumption		
	LED DC	Incandescent AC/DC	Neon AC
5V	7mA (Yellow: 21mA)	0.45W (6V)	–
6V	7mA (Yellow: 21mA)	–	–
12V	7mA	0.55W (14V)	–
24V	7mA	0.55W (28V)	–
110V	–	–	0.19VA
120V	–	–	0.21VA
220V	–	–	0.38VA
240V	–	–	0.42VA

Notes: • With transformer (LED): 2.6VA/110, 220V
• With transformer (Incandescent): 2VA/110, 220V
• For the incandescent lamps, the values in parentheses indicate the rated voltage of the lamps.

■ Contact reliability

FUJI has confirmed that the unit can be used in 1mA circuit conditions at 5V AC or DC. The operable range may vary depending on the ambient conditions and type of load.

■ Illuminated pushbutton switches/without transformer

Operator	Lamp	Voltage	Contact	Momentary action		Alternate action	
				AH164 type	AH165 (Oil-tight) type	AH164 type	AH165 (Oil-tight) type
Extended round head	Flat LED	24V DC	1NO+1NC	**AH164-L□11E3**	**AH165-L□11E3**	**AH164-L5□11E3**	**AH165-L5□11E3**
			2NO+2NC	**AH164-L□22E3**	**AH165-L□22E3**	**AH164-L5□22E3**	**AH165-L5□22E3**
			3NO+3NC	**AH164-L□33E3**	**AH165-L□33E3**	**AH164-L5□33E3**	**AH165-L5□33E3**
	Spot LED	24V DC	1NO+1NC	**AH164-L□11E2**	**AH165-L□11E2**	**AH164-L5□11E2**	**AH165-L5□11E2**
			2NO+2NC	**AH164-L□22E2**	**AH165-L□22E2**	**AH164-L5□22E2**	**AH165-L5□22E2**
			3NO+3NC	**AH164-L□33E2**	**AH165-L□33E2**	**AH164-L5□33E2**	**AH165-L5□33E2**
	Incandes-cent	24V AC/DC	1NO+1NC	**AH164-L□11E**	**AH165-L□11E**	**AH164-L5□11E**	**AH165-L5□11E**
			2NO+2NC	**AH164-L□22E**	**AH165-L□22E**	**AH164-L5□22E**	**AH165-L5□22E**
			3NO+3NC	**AH164-L□33E**	**AH165-L□33E**	**AH164-L5□33E**	**AH165-L5□33E**
	Neon	110V AC	1NO+1NC	**AH164-L□11H1**	**AH165-L□11H1**	**AH164-L5□11H1**	**AH165-L5□11H1**
			2NO+2NC	**AH164-L□22H1**	**AH165-L□22H1**	**AH164-L5□22H1**	**AH165-L5□22H1**
			3NO+3NC	**AH164-L□33H1**	**AH165-L□33H1**	**AH164-L5□33H1**	**AH165-L5□33H1**
		220V AC	1NO+1NC	**AH164-L□11M1**	**AH165-L□11M1**	**AH164-L5□11M1**	**AH165-L5□11M1**
			2NO+2NC	**AH164-L□22M1**	**AH165-L□22M1**	**AH164-L5□22M1**	**AH165-L5□22M1**
			3NO+3NC	**AH164-L□33M1**	**AH165-L□33M1**	**AH164-L5□33M1**	**AH165-L5□33M1**
Flush square head	Flat LED	24V DC	1NO+1NC	**AH164-SL□11E3**	**AH165-SL□11E3**	**AH164-SL5□11E3**	**AH165-SL5□11E3**
			2NO+2NC	**AH164-SL□22E3**	**AH165-SL□22E3**	**AH164-SL5□22E3**	**AH165-SL5□22E3**
			3NO+3NC	**AH164-SL□33E3**	**AH165-SL□33E3**	**AH164-SL5□33E3**	**AH165-SL5□33E3**
	Spot LED	24V DC	1NO+1NC	**AH164-SL□11E2**	**AH165-SL□11E2**	**AH164-SL5□11E2**	**AH165-SL5□11E2**
			2NO+2NC	**AH164-SL□22E2**	**AH165-SL□22E2**	**AH164-SL5□22E2**	**AH165-SL5□22E2**
			3NO+3NC	**AH164-SL□33E2**	**AH165-SL□33E2**	**AH164-SL5□33E2**	**AH165-SL5□33E2**
	Incandes-cent	24V AC/DC	1NO+1NC	**AH164-SL□11E**	**AH165-SL□11E**	**AH164-SL5□11E**	**AH165-SL5□11E**
			2NO+2NC	**AH164-SL□22E**	**AH165-SL□22E**	**AH164-SL5□22E**	**AH165-SL5□22E**
			3NO+3NC	**AH164-SL□33E**	**AH165-SL□33E**	**AH164-SL5□33E**	**AH165-SL5□33E**
	Neon	110V AC	1NO+1NC	**AH164-SL□11H1**	**AH165-SL□11H1**	**AH164-SL5□11H1**	**AH165-SL5□11H1**
			2NO+2NC	**AH164-SL□22H1**	**AH165-SL□22H1**	**AH164-SL5□22H1**	**AH165-SL5□22H1**
			3NO+3NC	**AH164-SL□33H1**	**AH165-SL□33H1**	**AH164-SL5□33H1**	**AH165-SL5□33H1**
		220V AC	1NO+1NC	**AH164-SL□11M1**	**AH165-SL□11M1**	**AH164-SL5□11M1**	**AH165-SL5□11M1**
			2NO+2NC	**AH164-SL□22M1**	**AH165-SL□22M1**	**AH164-SL5□22M1**	**AH165-SL5□22M1**
			3NO+3NC	**AH164-SL□33M1**	**AH165-SL□33M1**	**AH164-SL5□33M1**	**AH165-SL5□33M1**
Flush rectangular head	Flat LED	24V DC	1NO+1NC	**AH164-TL□11E3**	**AH165-TL□11E3**	**AH164-TL5□11E3**	**AH165-TL5□11E3**
			2NO+2NC	**AH164-TL□22E3**	**AH165-TL□22E3**	**AH164-TL5□22E3**	**AH165-TL5□22E3**
			3NO+3NC	**AH164-TL□33E3**	**AH165-TL□33E3**	**AH164-TL5□33E3**	**AH165-TL5□33E3**
	Spot LED	24V DC	1NO+1NC	**AH164-TL□11E2**	**AH165-TL□11E2**	**AH164-TL5□11E2**	**AH165-TL5□11E2**
			2NO+2NC	**AH164-TL□22E2**	**AH165-TL□22E2**	**AH164-TL5□22E2**	**AH165-TL5□22E2**
			3NO+3NC	**AH164-TL□33E2**	**AH165-TL□33E2**	**AH164-TL5□33E2**	**AH165-TL5□33E2**
	Incandes-cent	24V AC/DC	1NO+1NC	**AH164-TL□11E**	**AH165-TL□11E**	**AH164-TL5□11E**	**AH165-TL5□11E**
			2NO+2NC	**AH164-TL□22E**	**AH165-TL□22E**	**AH164-TL5□22E**	**AH165-TL5□22E**
			3NO+3NC	**AH164-TL□33E**	**AH165-TL□33E**	**AH164-TL5□33E**	**AH165-TL5□33E**
	Neon	110V AC	1NO+1NC	**AH164-TL□11H1**	**AH165-TL□11H1**	**AH164-TL5□11H1**	**AH165-TL5□11H1**
			2NO+2NC	**AH164-TL□22H1**	**AH165-TL□22H1**	**AH164-TL5□22H1**	**AH165-TL5□22H1**
			3NO+3NC	**AH164-TL□33H1**	**AH165-TL□33H1**	**AH164-TL5□33H1**	**AH165-TL5□33H1**
		220V AC	1NO+1NC	**AH164-TL□11M1**	**AH165-TL□11M1**	**AH164-TL5□11M1**	**AH165-TL5□11M1**
			2NO+2NC	**AH164-TL□22M1**	**AH165-TL□22M1**	**AH164-TL5□22M1**	**AH165-TL5□22M1**
			3NO+3NC	**AH164-TL□33M1**	**AH165-TL□33M1**	**AH164-TL5□33M1**	**AH165-TL5□33M1**

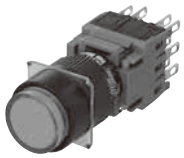
KKD07-205

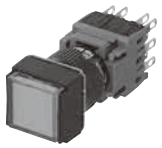
KKD07-204

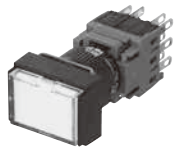
KKD07-202

Note: Replace the □ mark by the button color code, *see page C1-200.*

AH164 and AH165

Operator	Lamp	Voltage	Contact	Momentary action		Alternate action	
				AH164 type	AH165 (Oil-tight) type	AH164 type	AH165 (Oil-tight) type
Flush rectangular head with guard	Flat LED	24V DC	1NO+1NC	**AH164-TGL□11E3**	**AH165-TGL□11E3**	**AH164-TGL5□11E3**	**AH165-TGL5□11E3**
			2NO+2NC	**AH164-TGL□22E3**	**AH165-TGL□22E3**	**AH164-TGL5□22E3**	**AH165-TGL5□22E3**
			3NO+3NC	**AH164-TGL□33E3**	**AH165-TGL□33E3**	**AH164-TGL5□33E3**	**AH165-TGL5□33E3**
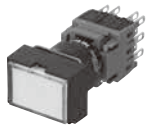 KKD07-203	Incandes-cent	24V AC/DC	1NO+1NC	**AH164-TGL□11E**	**AH165-TGL□11E**	**AH164-TGL5□11E**	**AH165-TGL5□11E**
			2NO+2NC	**AH164-TGL□22E**	**AH165-TGL□22E**	**AH164-TGL5□22E**	**AH165-TGL5□22E**
			3NO+3NC	**AH164-TGL□33E**	**AH165-TGL□33E**	**AH164-TGL5□33E**	**AH165-TGL5□33E**
	Neon	110V AC	1NO+1NC	**AH164-TGL□11H1**	**AH165-TGL□11H1**	**AH164-TGL5□11H1**	**AH165-TGL5□11H1**
			2NO+2NC	**AH164-TGL□22H1**	**AH165-TGL□22H1**	**AH164-TGL5□22H1**	**AH165-TGL5□22H1**
			3NO+3NC	**AH164-TGL□33H1**	**AH165-TGL□33H1**	**AH164-TGL5□33H1**	**AH165-TGL5□33H1**
		220V AC	1NO+1NC	**AH164-TGL□11M1**	**AH165-TGL□11M1**	**AH164-TGL5□11M1**	**AH165-TGL5□11M1**
			2NO+2NC	**AH164-TGL□22M1**	**AH165-TGL□22M1**	**AH164-TGL5□22M1**	**AH165-TGL5□22M1**
			3NO+3NC	**AH164-TGL□33M1**	**AH165-TGL□33M1**	**AH164-TGL5□33M1**	**AH165-TGL5□33M1**
Flush square head with guard	Flat LED	24V DC	1NO+1NC	**AH164-SGL□11E3**	**AH165-SGL□11E3**	**AH164-SGL5□11E3**	**AH165-SGL5□11E3**
			2NO+2NC	**AH164-SGL□22E3**	**AH165-SGL□22E3**	**AH164-SGL5□22E3**	**AH165-SGL5□22E3**
			3NO+3NC	**AH164-SGL□33E3**	**AH165-SGL□33E3**	**AH164-SGL5□33E3**	**AH165-SGL5□33E3**
KKD05-075b	Incandes-cent	24V AC/DC	1NO+1NC	**AH164-SGL□11E**	**AH165-SGL□11E**	**AH164-SGL5□11E**	**AH165-SGL5□11E**
			2NO+2NC	**AH164-SGL□22E**	**AH165-SGL□22E**	**AH164-SGL5□22E**	**AH165-SGL5□22E**
			3NO+3NC	**AH164-SGL□33E**	**AH165-SGL□33E**	**AH164-SGL5□33E**	**AH165-SGL5□33E**
	Neon	110V AC	1NO+1NC	**AH164-SGL□11H1**	**AH165-SGL□11H1**	**AH164-SGL5□11H1**	**AH165-SGL5□11H1**
			2NO+2NC	**AH164-SGL□22H1**	**AH165-SGL□22H1**	**AH164-SGL5□22H1**	**AH165-SGL5□22H1**
			3NO+3NC	**AH164-SGL□33H1**	**AH165-SGL□33H1**	**AH164-SGL5□33H1**	**AH165-SGL5□33H1**
		220V AC	1NO+1NC	**AH164-SGL□11M1**	**AH165-SGL□11M1**	**AH164-SGL5□11M1**	**AH165-SGL5□11M1**
			2NO+2NC	**AH164-SGL□22M1**	**AH165-SGL□22M1**	**AH164-SGL5□22M1**	**AH165-SGL5□22M1**
			3NO+3NC	**AH164-SGL□33M1**	**AH165-SGL□33M1**	**AH164-SGL5□33M1**	**AH165-SGL5□33M1**

■ Dimensions, mm

L, L5

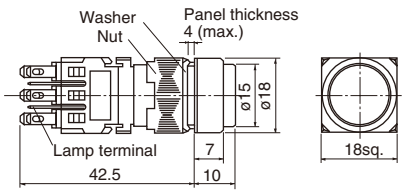

SL, SL5

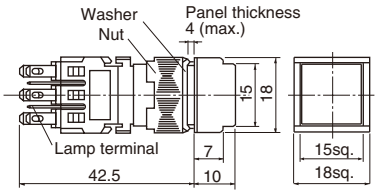

TL, TL5

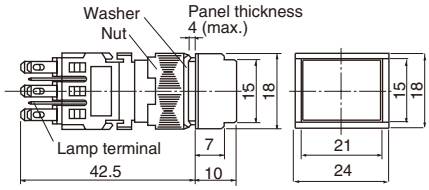

TGL, TGL5 SGL, SGL5

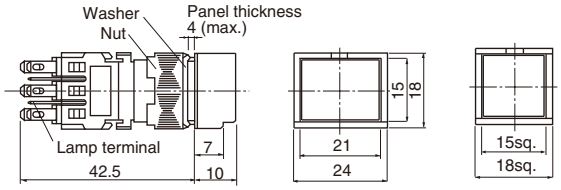

• Button color

Color	Green	Red	White	Yellow	Blue	Orange
Code	G	R	W	Y	S	O

- The color lens is made of a tinted transparent material.
- A white illuminated pushbutton is fitted with a transparent color lens.(Except the neon lamp)
- With wire-wrap pin terminals have a depth of 47mm.

• Lamp voltage

Voltages other than above are available

Code	LED	Incandescent	Neon
AA	5V DC	–	–
A	6V DC	5V AC/DC	–
B	12V DC	12V AC/DC	–
K	–	–	120V AC
P	–	–	240V AC

■ Illuminated pushbutton switches/with transformer

Operator	Lamp	Voltage	Contact	Momentary action		Alternate action	
				AH164 type	AH165 (Oil-tight) type	AH164 type	AH165 (Oil-tight) type
Extended round head AF90-945	Flat LED	■ Voltage code H: 100-110V AC M: 200-220V AC	1NO+1NC	**AH164-L□11■3**	**AH165-L□11■3**	**AH164-L5□11■3**	**AH165-L5□11■3**
			2NO+2NC	**AH164-L□22■3**	**AH165-L□22■3**	**AH164-L5□22■3**	**AH165-L5□22■3**
	Incandescent		1NO+1NC	**AH164-L□11■**	**AH165-L□11■**	**AH164-L5□11■**	**AH165-L5□11■**
			2NO+2NC	**AH164-L□22■**	**AH165-L□22■**	**AH164-L5□22■**	**AH165-L5□22■**
Flush square head AF90-946	Flat LED	■ Voltage code H: 100-110V AC M: 200-220V AC	1NO+1NC	**AH164-SL□11■3**	**AH165-SL□11■3**	**AH164-SL5□11■3**	**AH165-SL5□11■3**
			2NO+2NC	**AH164-SL□22■3**	**AH165-SL□22■3**	**AH164-SL5□22■3**	**AH165-SL5□22■3**
	Incandescent		1NO+1NC	**AH164-SL□11■**	**AH165-SL□11■**	**AH164-SL5□11■**	**AH165-SL5□11■**
			2NO+2NC	**AH164-SL□22■**	**AH165-SL□22■**	**AH164-SL5□22■**	**AH165-SL5□22■**
Flush rectangular head AF90-947	Flat LED	■ Voltage code H: 100-110V AC M: 200-220V AC	1NO+1NC	**AH164-TL□11■3**	**AH165-TL□11■3**	**AH164-TL5□11■3**	**AH165-TL5□11■3**
			2NO+2NC	**AH164-TL□22■3**	**AH165-TL□22■3**	**AH164-TL5□22■3**	**AH165-TL5□22■3**
	Incandescent		1NO+1NC	**AH164-TL□11■**	**AH165-TL□11■**	**AH164-TL5□11■**	**AH165-TL5□11■**
			2NO+2NC	**AH164-TL□22■**	**AH165-TL□22■**	**AH164-TL5□22■**	**AH165-TL5□22■**
Flush rectangular head with guard AF90-941	Flat LED	■ Voltage code H: 100-110V AC M: 200-220V AC	1NO+1NC	**AH164-TGL□11■3**	**AH165-TGL□11■3**	**AH164-TGL5□11■3**	**AH165-TGL5□11■3**
			2NO+2NC	**AH164-TGL□22■3**	**AH165-TGL□22■3**	**AH164-TGL5□22■3**	**AH165-TGL5□22■3**
	Incandescent		1NO+1NC	**AH164-TGL□11■**	**AH165-TGL□11■**	**AH164-TGL5□11■**	**AH165-TGL5□11■**
			2NO+2NC	**AH164-TGL□22■**	**AH165-TGL□22■**	**AH164-TGL5□22■**	**AH165-TGL5□22■**
Flush square head with guard AF90-948	Flat LED	■ Voltage code H: 100-110V AC M: 200-220V AC	1NO+1NC	**AH164-SGL□11■3**	**AH165-SGL□11■3**	**AH164-SGL5□11■3**	**AH165-SGL5□11■3**
			2NO+2NC	**AH164-SGL□22■3**	**AH165-SGL□22■3**	**AH164-SGL5□22■3**	**AH165-SGL5□22■3**
	Incandescent		1NO+1NC	**AH164-SGL□11■**	**AH165-SGL□11■**	**AH164-SGL5□11■**	**AH165-SGL5□11■**
			2NO+2NC	**AH164-SGL□22■**	**AH165-SGL□22■**	**AH164-SGL5□22■**	**AH165-SGL5□22■**

Note: Replace the □ mark by the button color code, *see page C1-202.*

AH164 and AH165

■ Dimensions, mm

L, L5

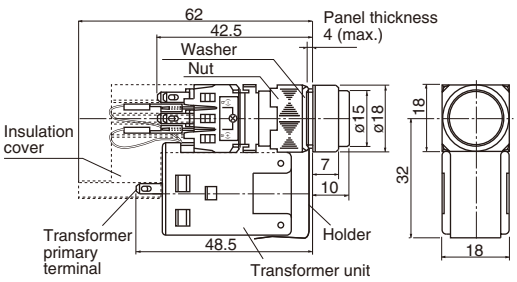

SL, SL5

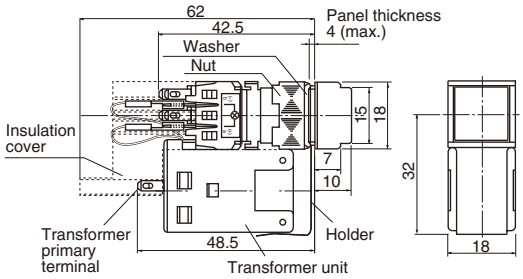

TL, TL5

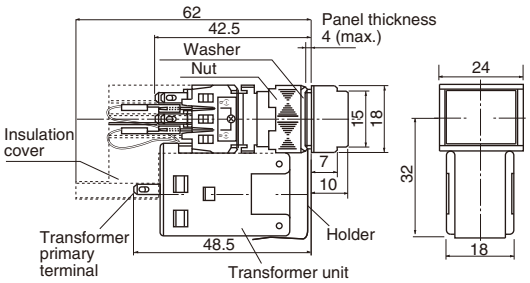

TGL, TGL5 SGL, SGL5

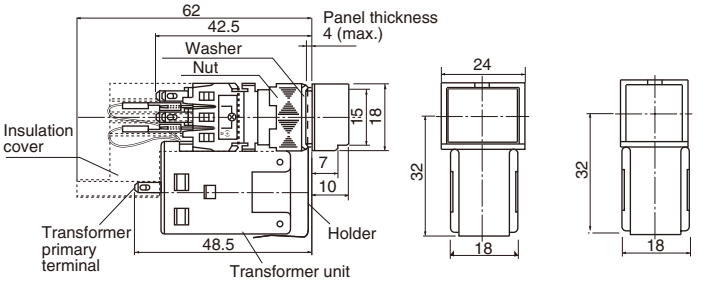

• **Button color**

Color	Green	Red	White	Yellow	Blue	Orange
Code	G	R	W	Y	S	O

• The color lens is made of a tinted transparent material.

■ Pushbutton switches

Operator	Contact	Momentary action		Alternate action		Dimensions, mm
		AH164 type	AH165 (oil-tight) type	AH164 type	AH165 (oil-tight) type	
Extended round head KKD07-209	1NO+1NC	**AH164-E□11**	**AH165-E□11**	**AH164-E5□11**	**AH165-E5□11**	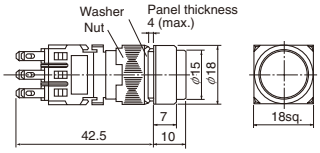
	2NO+2NC	**AH164-E□22**	**AH165-E□22**	**AH164-E5□22**	**AH165-E5□22**	
	3NO+3NC	**AH164-E□33**	**AH165-E□33**	**AH164-E5□33**	**AH165-E5□33**	
Flush square head KKD07-208	1NO+1NC	**AH164-SF□11**	**AH165-SF□11**	**AH164-SF5□11**	**AH165-SF5□11**	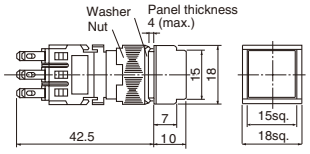
	2NO+2NC	**AH164-SF□22**	**AH165-SF□22**	**AH164-SF5□22**	**AH165-SF5□22**	
	3NO+3NC	**AH164-SF□33**	**AH165-SF□33**	**AH164-SF5□33**	**AH165-SF5□33**	
Flush rectangular head 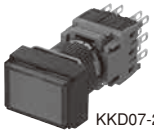 KKD07-206	1NO+1NC	**AH164-TF□11**	**AH165-TF□11**	**AH164-TF5□11**	**AH165-TF5□11**	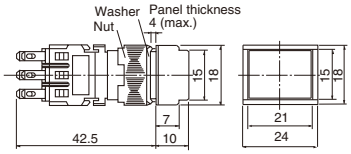
	2NO+2NC	**AH164-TF□22**	**AH165-TF□22**	**AH164-TF5□22**	**AH165-TF5□22**	
	3NO+3NC	**AH164-TF□33**	**AH165-TF□33**	**AH164-TF5□33**	**AH165-TF5□33**	
Flush rectangular head with guard 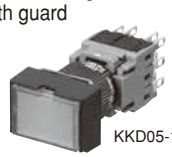 KKD05-176	1NO+1NC	**AH164-TGF□11**	**AH165-TGF□11**	**AH164-TGF5□11**	**AH165-TGF5□11**	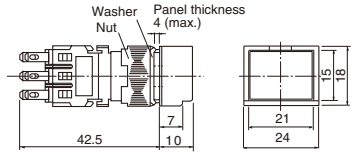
	2NO+2NC	**AH164-TGF□22**	**AH165-TGF□22**	**AH164-TGF5□22**	**AH165-TGF5□22**	
	3NO+3NC	**AH164-TGF□33**	**AH165-TGF□33**	**AH164-TGF5□33**	**AH165-TGF5□33**	
Flush square head with guard KKD05-075b	1NO+1NC	**AH164-SGF□11**	**AH165-SGF□11**	**AH164-SGF5□11**	**AH165-SGF5□11**	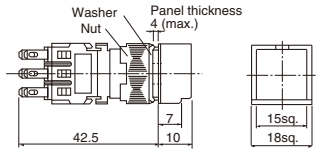
	2NO+2NC	**AH164-SGF□22**	**AH165-SGF□22**	**AH164-SGF5□22**	**AH165-SGF5□22**	
	3NO+3NC	**AH164-SGF□33**	**AH165-SGF□33**	**AH164-SGF5□33**	**AH165-SGF5□33**	
Mushroom head KKD07-210	1NO+1NC	**AH164-M□11**	**AH165-M□11**	**AH164-M5□11**	**AH165-M5□11**	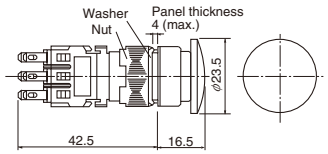
	2NO+2NC	**AH164-M□22**	**AH165-M□22**	**AH164-M5□22**	**AH165-M5□22**	
	3NO+3NC	**AH164-M□33**	**AH165-M□33**	**AH164-M5□33**	**AH165-M5□33**	
Convex square head KKD05-081b	1NO+1NC	**AH164-SM□11**	**AH165-SM□11**	**AH164-SM5□11**	**AH165-SM5□11**	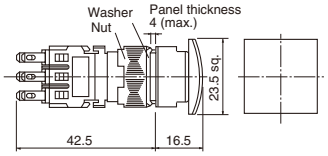
	2NO+2NC	**AH164-SM□22**	**AH165-SM□22**	**AH164-SM5□22**	**AH165-SM5□22**	
	3NO+3NC	**AH164-SM□33**	**AH165-SM□33**	**AH164-SM5□33**	**AH165-SM5□33**	
Convex rectangular head KKD05-082b	1NO+1NC	**AH164-TM□11**	**AH165-TM□11**	**AH164-TM5□11**	**AH165-TM5□11**	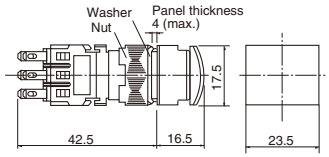
	2NO+2NC	**AH164-TM□22**	**AH165-TM□22**	**AH164-TM5□22**	**AH165-TM5□22**	
	3NO+3NC	**AH164-TM□33**	**AH165-TM□33**	**AH164-TM5□33**	**AH165-TM5□33**	

• **Button color**
Replace the □ mark by the following color code

Color	Green	Red	Black	White	Blue	Yellow	Orange
Code	G	R	B	W	S	Y	O

- The color lens is made of a tinted transparent material. (Except the M, SM, TM types)
- A white pushbutton is fitted with a transparent color lens.(Except the M, SM, TM types) A black pushbutton consists of a transparent color lens and an attached black legend plate. (Except M, SM, TM types)
- With wire-wrap pin terminals have a depth of 47mm.

■ Pushbutton switches

⊖ (Direct opening action)

Operator	Button color	Contact	Terminal	AH165 (oil-tight) type	Dimensions, mm
Push-lock, turn-reset (32mm dia.) KKD18-318	Red	1NC	Solder/Tab Solder	**AH165-VR01 (AH165-VR01-S)**	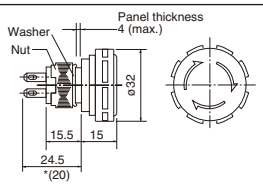
		2NC		**AH165-VR02 (AH165-VR02-S)**	
Push-lock, turn-reset (40mm dia.) KKD18-317		1NC		**AH165-V1R01 (AH165-V1R01-S)**	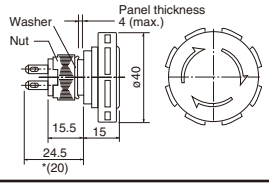
		2NC		**AH165-V1R02 (AH165-V1R02-S)**	

Notes: * ( ) For switch with solder terminal.
• Contact arrangements indicated in the table can be supplied.
• Product with no trigger action mechanism.

C1

■ Emergency stop pushbutton switches

⊖ (Direct opening action), conform to EN418

Operator	Button color	Contact	Terminal	AH165 (oil-tight) type	Dimensions, mm
Push-lock, turn-reset (32mm dia.) KKD16-043	Red	1NC	Solder/Tab Solder	**AH165-V5R01 (AH165-V5R01-S)**	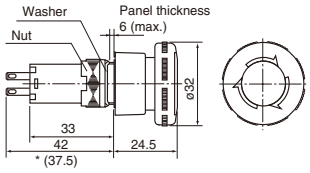
		2NC		**AH165-V5R02 (AH165-V5R02-S)**	
Push-lock, turn-reset (40mm dia.) KKD16-044		1NC		**AH165-V6R01 (AH165-V6R01-S)**	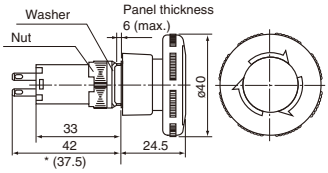
		2NC		**AH165-V6R02 (AH165-V6R02-S)**	

Notes: * ( ) For switch with solder terminal.
• Contact arrangements indicated in the table can be supplied.

■ Selector switches/2-position (90-degree)

Operator	Operation	Key removable position	Contact	AH164 type	AH165 (oil-tight) type	Dimensions, mm
Knob with rectangular bezel KKD07-213	Maintained	—	1NO+1NC	**AH164-P2B11**	**AH165-P2B11**	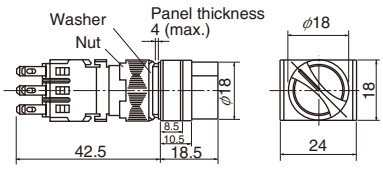
			2NO+2NC	**AH164-P2B22**	**AH165-P2B22**	
			3NO+3NC	**AH164-P2B33**	**AH165-P2B33**	
	Spring return	—	1NO+1NC	**AH164-P0B11**	**AH165-P0B11**	
			2NO+2NC	**AH164-P0B22**	**AH165-P0B22**	
			3NO+3NC	**AH164-P0B33**	**AH165-P0B33**	
Knob with square bezel 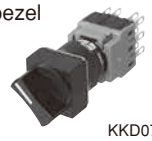 KKD07-215	Maintained	—	1NO+1NC	**AH164-SP2B11**	**AH165-SP2B11**	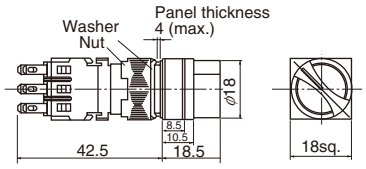
			2NO+2NC	**AH164-SP2B22**	**AH165-SP2B22**	
			3NO+3NC	**AH164-SP2B33**	**AH165-SP2B33**	
	Spring return	—	1NO+1NC	**AH164-SP0B11**	**AH165-SP0B11**	
			2NO+2NC	**AH164-SP0B22**	**AH165-SP0B22**	
			3NO+3NC	**AH164-SP0B33**	**AH165-SP0B33**	
Key with rectangular bezel KKD09-001L	Maintained	A	1NO+1NC	**AH164-J2A11A**	**AH165-J2A11A**	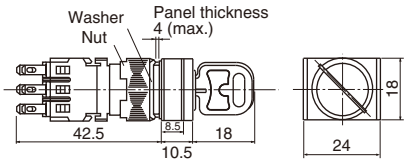
			2NO+2NC	**AH164-J2A22A**	**AH165-J2A22A**	
			3NO+3NC	**AH164-J2A33A**	**AH165-J2A33A**	
		B	1NO+1NC	**AH164-J2B11A**	**AH165-J2B11A**	
			2NO+2NC	**AH164-J2B22A**	**AH165-J2B22A**	
			3NO+3NC	**AH164-J2B33A**	**AH165-J2B33A**	
		D	1NO+1NC	**AH164-J2D11A**	**AH165-J2D11A**	
			2NO+2NC	**AH164-J2D22A**	**AH165-J2D22A**	
			3NO+3NC	**AH164-J2D33A**	**AH165-J2D33A**	
	Spring return	A	1NO+1NC	**AH164-J0A11A**	**AH165-J0A11A**	
			2NO+2NC	**AH164-J0A22A**	**AH165-J0A22A**	
			3NO+3NC	**AH164-J0A33A**	**AH165-J0A33A**	
Key with square bezel KKD09-001R	Maintained	A	1NO+1NC	**AH164-SJ2A11A**	**AH165-SJ2A11A**	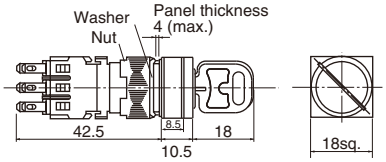
			2NO+2NC	**AH164-SJ2A22A**	**AH165-SJ2A22A**	
			3NO+3NC	**AH164-SJ2A33A**	**AH165-SJ2A33A**	
		B	1NO+1NC	**AH164-SJ2B11A**	**AH165-SJ2B11A**	
			2NO+2NC	**AH164-SJ2B22A**	**AH165-SJ2B22A**	
			3NO+3NC	**AH164-SJ2B33A**	**AH165-SJ2B33A**	
		D	1NO+1NC	**AH164-SJ2D11A**	**AH165-SJ2D11A**	
			2NO+2NC	**AH164-SJ2D22A**	**AH165-SJ2D22A**	
			3NO+3NC	**AH164-SJ2D33A**	**AH165-SJ2D33A**	
	Spring return	A	1NO+1NC	**AH164-SJ0A11A**	**AH165-SJ0A11A**	
			2NO+2NC	**AH164-SJ0A22A**	**AH165-SJ0A22A**	
			3NO+3NC	**AH164-SJ0A33A**	**AH165-SJ0A33A**	

- The operating angle range can be changed as shown below by setting the attached flange shifted by 45° in combination with the contact block.
  In this case, the minimum mounting pitch is 26mm because the contact block is shifted by 45° from the flange.

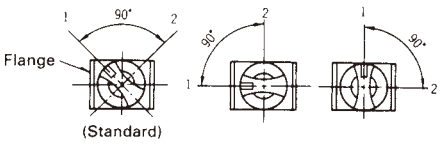

- There are 6 available key types; A, B, C, D, E and F.
  Standard key code is A.
- With wire-wrap pin terminals have a depth of 47mm.

- **Contact block position**

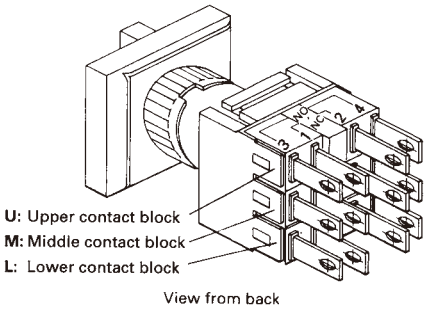

- **Contact arrangement and operator position:**

2-position selector switch

Contact arrangement		1NO+1NC	2NO+2NC	3NO+3NC
Operator position	Left	M	U, L	U, M, L
	Right	M	U, L	U, M, L

3-position selector switch

Contact arrangement		2NO+2NC	3NO+3NC
Operator position	Left	U, L	U, M, L
	Center		
	Right		

■ Selector switches/2-position (90-degree)

⊖ (Direct opening action)

Operator	Operation	Key removable position	Contact	AH165 (oil-tight) type	Dimensions, mm
Key with rectangular bezel KKD09-005L	Maintained	A ⊘	1NO+1NC	**AH165-JM2A11A**	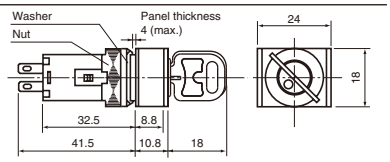
		B ⊗		**AH165-JM2B11A**	
		D ⊘		**AH165-JM2D11A**	
KKD09-005R		A ⊘	2NO+2NC	**AH165-JM2A22A**	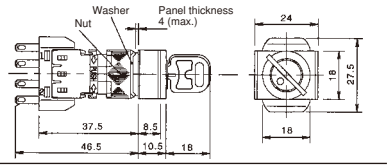
		B ⊗		**AH165-JM2B22A**	
		D ⊘		**AH165-JM2D22A**	
Key with round bezel KKD09-005L	Maintained	A ⊘	1NO+1NC	**AH165-RJM2A11A**	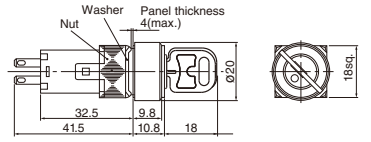
		B ⊗		**AH165-RJM2B11A**	
		D ⊘		**AH165-RJM2D11A**	
KKD09-007R		A ⊘	2NO+2NC	**AH165-RJM2A22A**	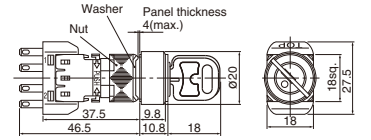
		B ⊗		**AH165-RJM2B22A**	
		D ⊘		**AH165-RJM2D22A**	

- There are 6 available key types; A, B, C, D, E and F.
  Standard key code is A.

• Contact arrangement and operator positions:

2-position selector switch

Contact arrangement		1NO+1NC
Operator position	Left ⊘	
	Right ⊘	

Contact arrangement		2NO+2NC	
Operator position	Left ⊘	U 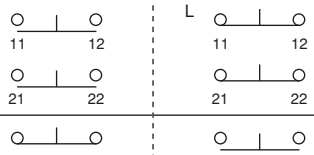	L
	Right ⊘	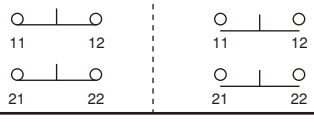	

• Terminal number

1NO+1NC 2NO+2NC

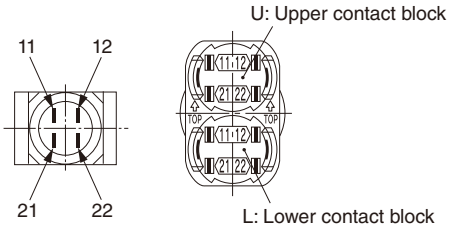

■ Selector switches/3-position (90-degree)

Operator	Operation	Key removable position	Contact	AH164 type	AH165 (oil-tight) type	Dimensions, mm
Knob with rectangular bezel KKD07-214	Maintained	—	2NO+2NC 3NO+3NC	**AH164-P3B22** **AH164-P3B33**	**AH165-P3B22** **AH165-P3B33**	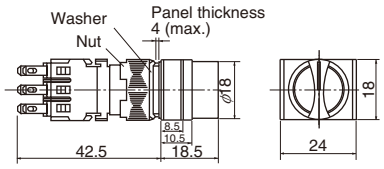
	Spring/ manual return	—	2NO+2NC 3NO+3NC	**AH164-P6B22** **AH164-P6B33**	**AH165-P6B22** **AH165-P6B33**	
	Spring/ manual return	—	2NO+2NC 3NO+3NC	**AH164-P7B22** **AH164-P7B33**	**AH165-P7B22** **AH165-P7B33**	
	Spring return	—	2NO+2NC 3NO+3NC	**AH164-P1B22** **AH164-P1B33**	**AH165-P1B22** **AH165-P1B33**	
Knob with square bezel KKD07-216	Maintained	—	2NO+2NC 3NO+3NC	**AH164-SP3B22** **AH164-SP3B33**	**AH165-SP3B22** **AH165-SP3B33**	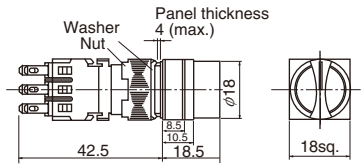
	Spring/ manual return	—	2NO+2NC 3NO+3NC	**AH164-SP6B22** **AH164-SP6B33**	**AH165-SP6B22** **AH165-SP6B33**	
	Spring/ manual return	—	2NO+2NC 3NO+3NC	**AH164-SP7B22** **AH164-SP7B33**	**AH165-SP7B22** **AH165-SP7B33**	
	Spring return	—	2NO+2NC 3NO+3NC	**AH164-SP1B22** **AH164-SP1B33**	**AH165-SP1B22** **AH165-SP1B33**	
Key with rectangular bezel KKD09-002L	Maintained*	⊖ A	2NO+2NC 3NO+3NC	**AH164-J3A22A** **AH164-J3A33A**	**AH165-J3A22A** **AH165-J3A33A**	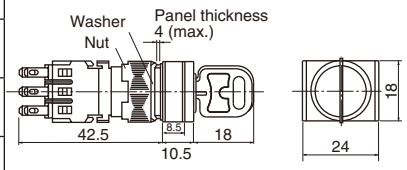
		⦶ E	2NO+2NC 3NO+3NC	**AH164-J3E22A** **AH164-J3E33A**	**AH165-J3E22A** **AH165-J3E33A**	
		⊖ D	2NO+2NC 3NO+3NC	**AH164-J3D22A** **AH164-J3D33A**	**AH165-J3D22A** **AH165-J3D33A**	
		⊕ C	2NO+2NC 3NO+3NC	**AH164-J3C22A** **AH164-J3C33A**	**AH165-J3C22A** **AH165-J3C33A**	
	Spring/ manual return	⦶ E	2NO+2NC 3NO+3NC	**AH164-J6E22A** **AH164-J6E33A**	**AH165-J6E22A** **AH165-J6E33A**	
		⊖ D	2NO+2NC 3NO+3NC	**AH164-J6D22A** **AH164-J6D33A**	**AH165-J6D22A** **AH165-J6D33A**	
	Spring/ manual return	⊖ A	2NO+2NC 3NO+3NC	**AH164-J7A22A** **AH164-J7A33A**	**AH165-J7A22A** **AH165-J7A33A**	
		⦶ E	2NO+2NC 3NO+3NC	**AH164-J7E22A** **AH164-J7E33A**	**AH165-J7E22A** **AH165-J7E33A**	
	Spring return	⦶ E	2NO+2NC 3NO+3NC	**AH164-J1E22A** **AH164-J1E33A**	**AH165-J1E22A** **AH165-J1E33A**	
Key with square bezel KKD09-002R	Maintained*	⊖ A	2NO+2NC 3NO+3NC	**AH164-SJ3A22A** **AH164-SJ3A33A**	**AH165-SJ3A22A** **AH165-SJ3A33A**	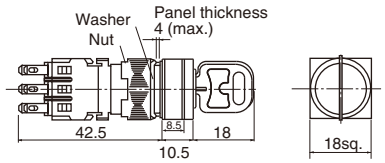
		⦶ E	2NO+2NC 3NO+3NC	**AH164-SJ3E22A** **AH164-SJ3E33A**	**AH165-SJ3E22A** **AH165-SJ3E33A**	
		⊖ D	2NO+2NC 3NO+3NC	**AH164-SJ3D22A** **AH164-SJ3D33A**	**AH165-SJ3D22A** **AH165-SJ3D33A**	
		⊕ C	2NO+2NC 3NO+3NC	**AH164-SJ3C22A** **AH164-SJ3C33A**	**AH165-SJ3C22A** **AH165-SJ3C33A**	
	Spring/ manual return	⦶ E	2NO+2NC 3NO+3NC	**AH164-SJ6E22A** **AH164-SJ6E33A**	**AH165-SJ6E22A** **AH165-SJ6E33A**	
		⊖ D	2NO+2NC 3NO+3NC	**AH164-SJ6D22A** **AH164-SJ6D33A**	**AH165-SJ6D22A** **AH165-SJ6D33A**	
	Spring/ manual return	⊖ A	2NO+2NC 3NO+3NC	**AH164-SJ7A22A** **AH164-SJ7A33A**	**AH165-SJ7A22A** **AH165-SJ7A33A**	
		⦶ E	2NO+2NC 3NO+3NC	**AH164-SJ7E22A** **AH164-SJ7E33A**	**AH165-SJ7E22A** **AH165-SJ7E33A**	
	Spring return	⦶ E	2NO+2NC 3NO+3NC	**AH164-SJ1E22A** **AH164-SJ1E33A**	**AH165-SJ1E22A** **AH165-SJ1E33A**	

- There are 6 available key types; A, B, C, D, E and F. Standard key code is A.
- Contact arrangement and operator position: *See page C1-205.*
- Spring return, spring/manual return (spring return): Operation angle 70-degree
- * Available key removable position: Code B⊖
- With wire-wrap pin terminals have a depth of 47mm.

AH164 and AH165

■ Selector switches/3-position (45-degree)

Operator	Operation	Key removable position	Contact	AH164 type	AH165 (oil-tight) type	Dimensions, mm
Knob with rectangular bezel KKD07-214	Maintained	—	2NO+2NC 3NO+3NC	**AH164-PK3B22** **AH164-PK3B33**	**AH165-PK3B22** **AH165-PK3B33**	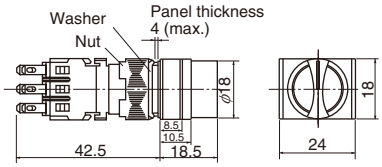
	Spring/ manual return	—	2NO+2NC 3NO+3NC	**AH164-PK6B22** **AH164-PK6B33**	**AH165-PK6B22** **AH165-PK6B33**	
	Spring/ manual return	—	2NO+2NC 3NO+3NC	**AH164-PK7B22** **AH164-PK7B33**	**AH165-PK7B22** **AH165-PK7B33**	
	Spring return	—	2NO+2NC 3NO+3NC	**AH164-PK1B22** **AH164-PK1B33**	**AH165-PK1B22** **AH165-PK1B33**	
Knob with square bezel KKD07-216	Maintained	—	2NO+2NC 3NO+3NC	**AH164-SPK3B22** **AH164-SPK3B33**	**AH165-SPK3B22** **AH165-SPK3B33**	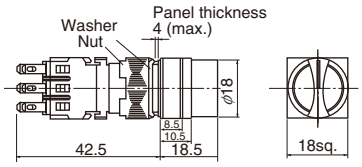
	Spring/ manual return	—	2NO+2NC 3NO+3NC	**AH164-SPK6B22** **AH164-SPK6B33**	**AH165-SPK6B22** **AH165-SPK6B33**	
	Spring/ manual return	—	2NO+2NC 3NO+3NC	**AH164-SPK7B22** **AH164-SPK7B33**	**AH165-SPK7B22** **AH165-SPK7B33**	
	Spring return	—	2NO+2NC 3NO+3NC	**AH164-SPK1B22** **AH164-SPK1B33**	**AH165-SPK1B22** **AH165-SPK1B33**	
Key with rectangular bezel KKD09-002L	Maintained	A	2NO+2NC 3NO+3NC	**AH164-JK3A22A** **AH164-JK3A33A**	**AH165-JK3A22A** **AH165-JK3A33A**	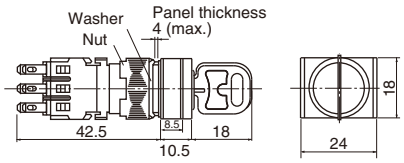
		E	2NO+2NC 3NO+3NC	**AH164-JK3E22A** **AH164-JK3E33A**	**AH165-JK3E22A** **AH165-JK3E33A**	
		D	2NO+2NC 3NO+3NC	**AH164-JK3D22A** **AH164-JK3D33A**	**AH165-JK3D22A** **AH165-JK3D33A**	
		C	2NO+2NC 3NO+3NC	**AH164-JK3C22A** **AH164-JK3C33A**	**AH165-JK3C22A** **AH165-JK3C33A**	
	Spring/ manual return	E	2NO+2NC 3NO+3NC	**AH164-JK6E22A** **AH164-JK6E33A**	**AH165-JK6E22A** **AH165-JK6E33A**	
		D	2NO+2NC 3NO+3NC	**AH164-JK6D22A** **AH164-JK6D33A**	**AH165-JK6D22A** **AH165-JK6D33A**	
	Spring/ manual return	A	2NO+2NC 3NO+3NC	**AH164-JK7A22A** **AH164-JK7A33A**	**AH165-JK7A22A** **AH165-JK7A33A**	
		E	2NO+2NC 3NO+3NC	**AH164-JK7E22A** **AH164-JK7E33A**	**AH165-JK7E22A** **AH165-JK7E33A**	
	Spring return	E	2NO+2NC 3NO+3NC	**AH164-JK1E22A** **AH164-JK1E33A**	**AH165-JK1E22A** **AH165-JK1E33A**	
Key with square bezel KKD09-002R	Maintained	A	2NO+2NC 3NO+3NC	**AH164-SJK3A22A** **AH164-SJK3A33A**	**AH165-SJK3A22A** **AH165-SJK3A33A**	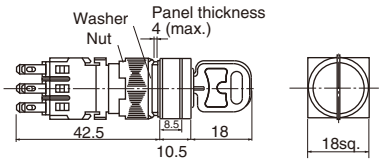
		E	2NO+2NC 3NO+3NC	**AH164-SJK3E22A** **AH164-SJK3E33A**	**AH165-SJK3E22A** **AH165-SJK3E33A**	
		D	2NO+2NC 3NO+3NC	**AH164-SJK3D22A** **AH164-SJK3D33A**	**AH165-SJK3D22A** **AH165-SJK3D33A**	
		C	2NO+2NC 3NO+3NC	**AH164-SJK3C22A** **AH164-SJK3C33A**	**AH165-SJK3C22A** **AH165-SJK3C33A**	
	Spring/ manual return	E	2NO+2NC 3NO+3NC	**AH164-SJK6E22A** **AH164-SJK6E33A**	**AH165-SJK6E22A** **AH165-SJK6E33A**	
		D	2NO+2NC 3NO+3NC	**AH164-SJK6D22A** **AH164-SJK6D33A**	**AH165-SJK6D22A** **AH165-SJK6D33A**	
	Spring/ manual return	A	2NO+2NC 3NO+3NC	**AH164-SJK7A22A** **AH164-SJK7A33A**	**AH165-SJK7A22A** **AH165-SJK7A33A**	
		E	2NO+2NC 3NO+3NC	**AH164-SJK7E22A** **AH164-SJK7E33A**	**AH165-SJK7E22A** **AH165-SJK7E33A**	
	Spring return	E	2NO+2NC 3NO+3NC	**AH164-SJK1E22A** **AH164-SJK1E33A**	**AH165-SJK1E22A** **AH165-SJK1E33A**	

- There are 6 available key types; A, B, C, D, E and F.
  Standard key code is A.
- Contact arrangement and operator position: *See page C1-209.*

• Key removable positions (JK, SJK)

Remvable position							
Code	A	B	C	D	E	F	G

Operation code	Key removable position
3	A, B, C, D, E, F, G
6	D, E, F
7	A, E, G
1	E

• Key code No.
There are 6 available key types; A, B, C, D, E and F.
Standard key code is A.

• **Contact block position**

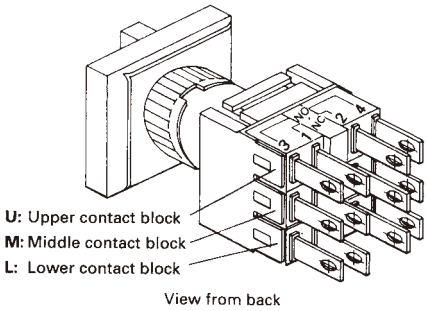

• **Contact arrangement and operator position:**
3-position selector switch

Contact arrangement		2NO+2NC	3NO+3NC
Operator position	Left	U L	U M L
	Center		
	Right		

AH164 and AH165

■ Pilot lights/without transformer

Lens	Lamp	Voltage	AH164 type	AH165 (oil-tight) type	Dimensions, mm
Extended round KKD05-093a	Flat LED	24V DC	**AH164-Z□E3**	**AH165-Z□E3**	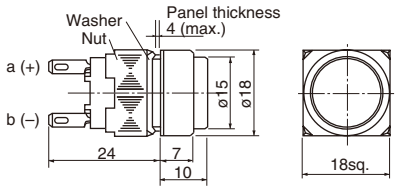
	Spot LED	24V DC	**AH164-Z□E2**	**AH165-Z□E2**	
	Incandescent	24V AC/DC	**AH164-Z□E**	**AH165-Z□E**	
	Neon	110V AC 220V AC	**AH164-Z□H1** **AH164-Z□M1**	**AH165-Z□H1** **AH165-Z□M1**	
Flush square KKD05-094a	Flat LED	24V DC	**AH164-ZS□E3**	**AH165-ZS□E3**	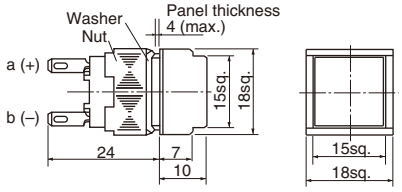
	Spot LED	24V DC	**AH164-ZS□E2**	**AH165-ZS□E2**	
	Incandescent	24V AC/DC	**AH164-ZS□E**	**AH165-ZS□E**	
	Neon	110V AC 220V AC	**AH164-ZS□H1** **AH164-ZS□M1**	**AH165-ZS□H1** **AH165-ZS□M1**	
Flush rectangular KKD05-095a	Flat LED	24V DC	**AH164-ZT□E3**	**AH165-ZT□E3**	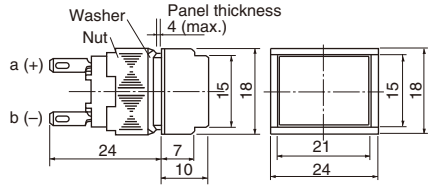
	Spot LED	24V DC	**AH164-ZT□E2**	**AH165-ZT□E2**	
	Incandescent	24V AC/DC	**AH164-ZT□E**	**AH165-ZT□E**	
	Neon	110V AC 220V AC	**AH164-ZT□H1** **AH164-ZT□M1**	**AH165-ZT□H1** **AH165-ZT□M1**	
Dome KKD18-319	LED	12V DC	–	**AH165-ZM□B2**	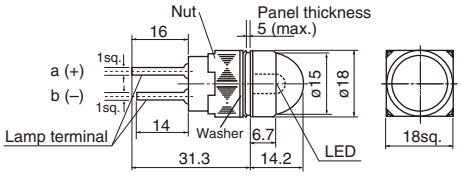
		24V DC	–	**AH165-ZM□E2**	

• Lens color

Replace the □ mark by the following lens color code

Color	Green	Red	White	Yellow	Blue	Orange
Code	G	R	W	Y	S	O

- The color lens is made of a tinted transparent material.
- A white pilot lights is fitted with a transparent color lens. (Except the neon lamp and dome).
- With wire-wrap pin terminals have a depth of 29mm. (Except for ZM type)

• Lamp voltage

Voltages other than above are available

Code	LED	Incandescent	Neon
AA	5V DC	–	–
A	6V DC	5V AC/DC	–
B	12V DC	12V AC/DC	–
K	–	–	120V AC
P	–	–	240V AC

Note: Except for ZM types and red/green LED types

Fuji Electric FA Components & Systems Co., Ltd.
Information subject to change without notice

■ Pilot lights/with transformer

Lens	Lamp	Voltage	AH164 type	AH165 (oil-tight) type	Dimensions, mm
Extended square AF90-944	Flat LED	■ Voltage H: 100-110V AC M: 200-220V AC	**AH164-Z□■3**	**AH165-Z□■3**	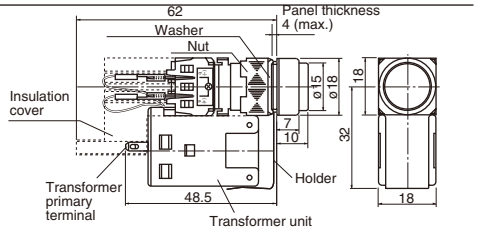
	Incandescent		**AH164-Z□■**	**AH165-Z□■**	
Flush square AF90-943	Flat LED	■ Voltage H: 100-110V AC M: 200-220V AC	**AH164-ZS□■3**	**AH165-ZS□■3**	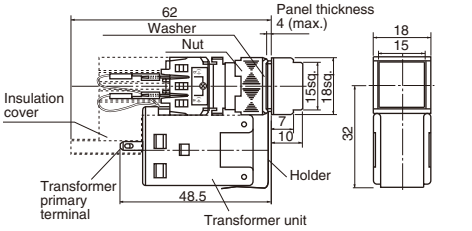
	Incandescent		**AH164-ZS□■**	**AH165-ZS□■**	
Flush rectangular AF90-942	Flat LED	■ Voltage H: 100-110V AC M: 200-220V AC	**AH164-ZT□■3**	**AH165-ZT□■3**	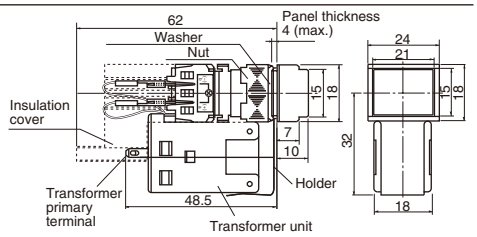
	Incandescent		**AH164-ZT□■**	**AH165-ZT□■**	

• **Lens color**

Replace the □ mark by the following lens color code

Color	Green	Red	White	Yellow	Blue	Orange
Code	G	R	W	Y	S	O

• The color lens is made of a tinted transparent material.
• A white pilot lights is fitted with a transparent color lens.

AH164 and AH165

■ Buzzers

Sound	Operating voltage	Type	Dimensions, mm
Standard KKD13-070	6V DC 12 to 24V AC/DC	**AH164-TXBADC** **AH164-TXBE**	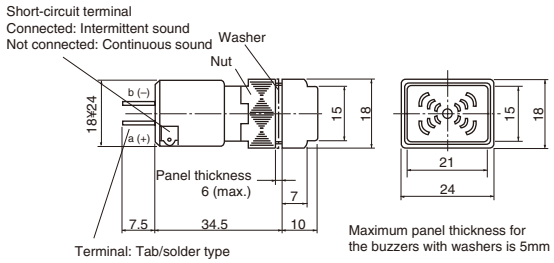
Loud sound KKD13-075	6V DC 12 to 24V AC/DC	**AH164-TX1BADC** **AH164-TX1BE**	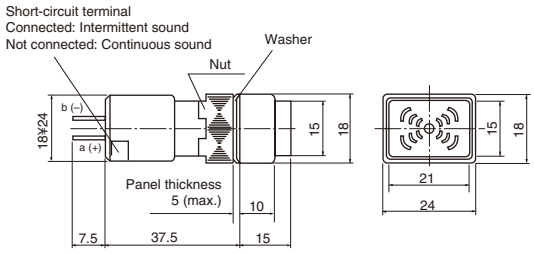
Loud sound with volume control KKD07-223	6V AC/DC 12 to 24V AC/DC	**AH164-TX2BA** **AH164-TX2BE**	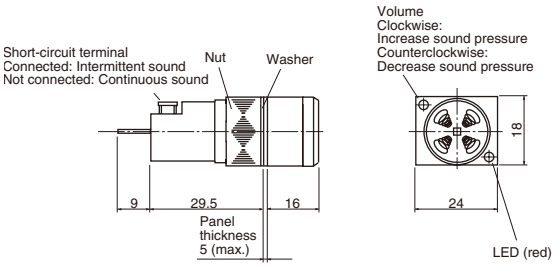
Standard sound with volume control (IP54) KKD05-096b	6V AC/DC 12 to 24V AC/DC	**AH165-XBA** **AH165-XBE**	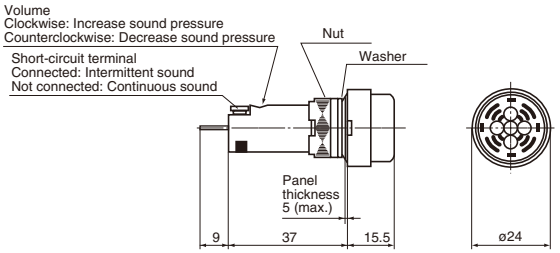

Fuji Electric FA Components & Systems Co., Ltd.
Information subject to change without notice

AH164 and AH165
Mounting space

■ Mounting space, mm

• Pushbuttons and pilot lights

Extended round head or lens

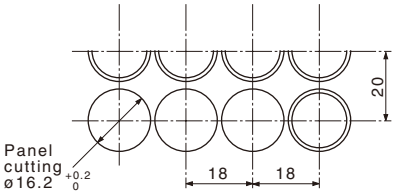

Flush square head or lens

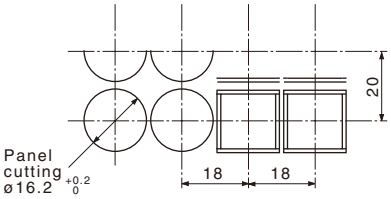

Flush rectangular head or lens

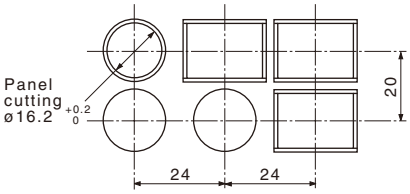

Mushroom head

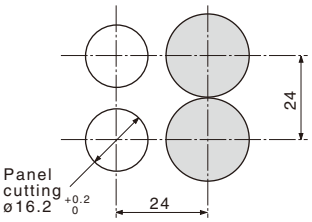

Convex square head

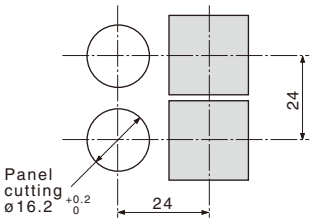

Convex rectangular head

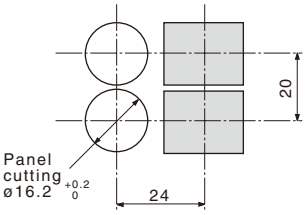

• Selector switches

•When mounting the selector switches near the pilot light

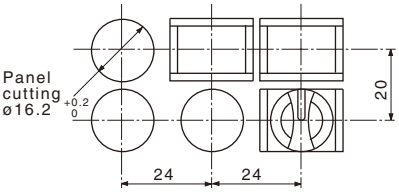

• When mounting the selector switches near each other

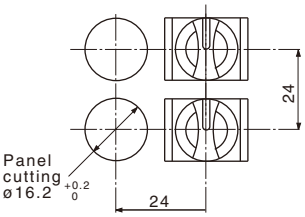

• With transformer

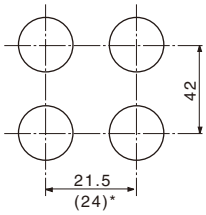

Note: *( ) For switch with flush rectangular head

• When mounting the JM or RJM selector switches near each other (2NO+2NC only)

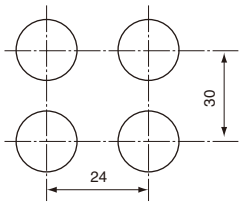

• When mounting the JM or RJM selector switches near the other selector switch, pushbutton switch and pilot lights

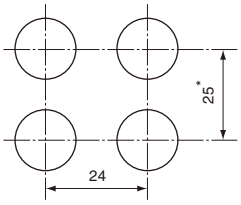

Note: * Mushroom, convex square, convex rectangular: 27

• AH165-V, V1, V5, V6

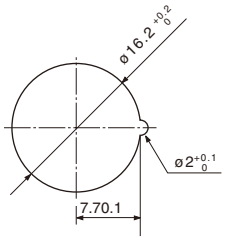

• AH165-JM, RJM

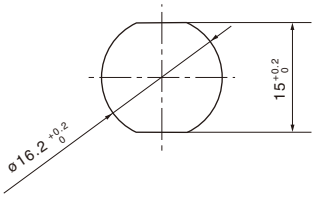

Terminal number

• AH164, 165

Type	Wiring	Terminal position
Illuminated pushbuttons	a (+) b (-) ① ② ③ ④	Type number display side ③ ① b (-) ② ④ ③ ① ② ④ ③ ① a (+) ② ④
Pushbuttons Selector switches (except for JM, RJM types)	① ② ③ ④	
Pilot lights (without transformer)	a (+) b (-)	Type number display side ⊕ a ⊖ b

AH165-2
Type number nomenclature

■ Type number nomenclature

Pushbuttons, illuminated pushbuttons and pilot lights

AH165-2 FL R 11 E 3 – W
① ② ③ ④ ⑤ ⑥ ⑦

① Product category
AH165-2: Oil-tight (Large operator)

② Operator or lens
• Operator for illuminated pushbutton
FL: Flush round head
FL5: Flush round head (Alternate)
SFL: Flush square head
SFL5: Flush square head (Alternate)
EL: Extended round head
EL5: Extended round head (Alternate)
SEL: Extended square head
SEL5: Extended square head (Alternate)
SCL: Concave square head
SCL5: Concave square head (Alternate)
ML: Mushroom head
YML: Mushroom head with square bezel
VL: Push-lock, turn-reset
YVL: Push-lock, turn-reset with square bezel

• Operator for pushbuttons
F: Flush round head
F5: Flush round head (Alternate)
SF: Flush square head
SF5: Flush square head (Alternate)
E: Extended round head
E5: Extended round head (Alternate)
SE: Extended square head
SE5: Extended square head (Alternate)
SCE: Concave square head
SCE5: Concave square head (Alternate)
M: Mushroom head
YM: Mushroom head with square bezel
V: Push-lock, turn-reset
YV: Push-lock, turn-reset with square bezel
S2: With selector ring
YS2: With selector ring with square bezel

• Lens for pilot lights
Z: Flush round
SZ: Flush square
ZE: Extended round
SEZ: Extended square

③ Color of button or lens

Code	Color	Button	LED	Incandescent	Neon
G	Green	•	•	•	•
R	Red	•	•	•	• (Orange)
B	Black*	•	–	–	–
Y	Yellow	•	•	•	• (Orange)
W	White	•	• (Orange)	•	• (Orange)
S	Blue	•	•	•	• (Green)
O	Orange	•	• (Amber)	•	•

Notes: • ( ): indicates luminous color
* Not available for illuminated types

④ Contact arrangement (except pilot lights)
11: 1NO+1NC
22: 2NO+2NC
33: 3NO+3NC

⑤ Lamp voltage

Code	LED	Incandescent	Neon
AA	5V DC	–	–
A	6V DC	5V AC/DC	–
B	12V DC	12V AC/DC	–
E	24V DC	24V AC/DC	–
H	–	–	110V AC
K	–	–	120V AC
M	–	–	220V AC
P	–	–	240V AC

⑥ Type of lamp
Blank: Incandescent
1: Neon
3: Flat LED

⑦ Terminal
Blank: Solder/tab
W: Wire-wrap

AH165-2
Type number nomenclature

■ Type number nomenclature

Selector switches

AH165-2 J 2 B 11 A – W
① ② ③ ④ ⑤ ⑥ ⑦

① **Product category**
AH165-2: Oil-tight (Large operator)

② **Operator**
• Knob and key type
2-position (operating angle 90˚)
P: Knob
YP: Knob with square bezel
J: Key
YJ: Key with square bezel

3-position (operating angle 45˚)
P: Knob
YP: Knob with square bezel
J: Key
YJ: Key with square bezel

• Lever type
2-position (operating angle 45˚)
H: Lever
SH: Lever with square bezel
Note: The operation angle is 45˚ on the upper and lower side.

③ **Operation**
2: 2-position, maintained
0: 2-position, spring return*
3: 3-position, maintained
6: 3-position, spring/manual return (Left to center)
7: 3-position, spring/manual return (Right to center)
1: 3-position, spring return
Note: * Except for H and SH types

④ **Color of knob, lever or key removable position**
• Color of knob or lever
B: Black

• Key removable position

Code	2-position		3-position			
	2	0	1	3	6	7
A	⊘	⊘	–	⊘	–	⊘
B	⊗	–	–	⊗	–	–
C	–	–	–	⊛	–	–
D	⊘	–	–	⊘		–
E	–	–	⊘			
F	–	–	–	⊘		–
G	–	–	–	⊘	–	⊘

⑤ **Contact arrangement**
11: 1NO+1NC*
22: 2NO+2NC
33: 3NO+3NC
Note: * Except for 3-position

⑥ **Key type No.**
A (standard), B, C, D, E, F

⑦ **Terminal**
Blank: Solder/tab
W: Wire-wrap

Illuminated selector switches

AH165-2 PL 2 G 11 E 3
① ② ③ ④ ⑤ ⑥ ⑦

① **Product category**
AH165-2: Oil-tight (Large operator)

② **Operator**
• 2-position (operating angle 90˚)
PL: Knob

• 3-position (operating angle 45˚)
PL: Knob

③ **Operation**
2: 2-position, maintained
3: 3-position, maintained

④ **Color of knob**

Code	Color	LED	Incandescent	Neon
G	Green	•	•	•
R	Red	•	•	• (Orange)
Y	Yellow	•	•	• (Orange)
W	White	• (Orange)	•	• (Orange)
S	Blue	•	•	• (Green)
O	Orange	• (Amber)	•	•

Notes: • ( ): indicates luminous color
• The part other than the arrow of the knob is black.

⑤ **Contact arrangement**
11: 1NO+1NC*
22: 2NO+2NC
Note: * Except for 3-position

⑥ **Lamp voltage**

Code	LED	Incandescent	Neon
AA	5V DC	–	–
A	6V DC	5V AC/DC	–
B	12V DC	12V AC/DC	–
E	24V DC	24V AC/DC	–
H	–	–	110V AC
K	–	–	120V AC
M	–	–	220V AC
P	–	–	240V AC

⑦ **Type of lamp**
Blank: Incandescent
1: Neon
3: Flat LED
Note: Terminal with solder/tab only

AH165-2
Ratings and specifications

■ Standards approved

UL508	File No. E44592
CSA C22.2 No.14	File No. LR20479 (except for AH165-2Z, 2ZE, 2SZ, 2SZE) File No. LR84365 (for AH165-2Z, 2ZE, 2SZ, 2SZE)
TÜV: EN60947-5-1	Pushbutton, illuminated pushbutton: R9250087 Selector (except for AH165-2H, SH), illuminated selector: R9250088 Selector (for AH165-2H, SH): R9250087 Pilot lights: R9250089

■ Specifications (Indoor use)

Item		AH165-2
Rated insulation voltage		250V AC/DC
Ambient temperature (no condensation or no icing)		–10 to +70°C *1
Humidity		45 to 85%RH (at –5 to +40°C), no condensation or no icing
Durability (operations)	Mechanical	Pushbutton and illuminated pushubutton switch Momentary action: 1 million Alternate action: 250,000 Push-lock, turn-reset: 100,000 With selector ring: 250,000 Selector and illuminated selector switch: 250,000*2
	Electrical	100,000 (220V AC 0.7A)
Dielectric strength		2000V AC, 1 minute (Between lamp and contact terminals: 1500V AC, 1 minute)
Conditional short-circuit current		1000A
Short-circuit protective device		Fuse 1A
Pollution degree		3
Vibration		Resonance: 10 to 55Hz, double amplitude 0.1mm Constant: 16.7Hz, double amplitude 3mm
Shock		Malfunction durability: 100m/s2 Mechanical durability: 500m/s2
Operating frequency		1200 operation/hour (on-load factor: 40%)
Insulation resistance		100MΩ or more (500V DC megger)
Operator protection		IP65

Notes: *1 For illuminated pushbutton, illuminated selector switch and pilot light: –10 to +55°C
*2 Key insertion/removal durability for selector switch key types: 10,000

■ Contact ratings
See page C1-200

■ Lamp ratings

Rated operational voltage	Consumption		
	LED DC	Incandescent AC/DC	Neon AC
5V	7mA (Yellow: 28mA)	0.45W (6V)	–
6V	7mA (Yellow: 28mA)	–	–
12V	7mA	0.55W (14V)	–
24V	7mA	0.55W (28V)	–
110V	–	–	0.19VA
120V	–	–	0.21VA
220V	–	–	0.38VA
240V	–	–	0.42VA

Notes: For the incandescent lamps, the values in parentheses indicate the rated voltage of the lamps.

■ Contact reliability
FUJI has confirmed that the unit can be used in 1mA circuit conditions at 5V AC or DC. The operable range may vary depending on the ambient conditions and type of load.

■ Illuminated pushbutton switches

Operator	Lamp	Voltage	Contact	Momentary action Type	Alternate action Type	Dimensions, mm
Flush round head KKD07-225	Flat LED	24V DC	1NO+1NC	**AH165-2FL□11E3**	**AH165-2FL5□11E3**	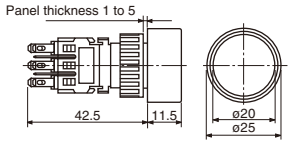
			2NO+2NC	**AH165-2FL□22E3**	**AH165-2FL5□22E3**	
			3NO+3NC	**AH165-2FL□33E3**	**AH165-2FL5□33E3**	
	Incandescent	24V AC/DC	1NO+1NC	**AH165-2FL□11E**	**AH165-2FL5□11E**	
			2NO+2NC	**AH165-2FL□22E**	**AH165-2FL5□22E**	
			3NO+3NC	**AH165-2FL□33E**	**AH165-2FL5□33E**	
	Neon	110V AC	1NO+1NC	**AH165-2FL□11H1**	**AH165-2FL5□11H1**	
			2NO+2NC	**AH165-2FL□22H1**	**AH165-2FL5□22H1**	
			3NO+3NC	**AH165-2FL□33H1**	**AH165-2FL5□33H1**	
		220V AC	1NO+1NC	**AH165-2FL□11M1**	**AH165-2FL5□11M1**	
			2NO+2NC	**AH165-2FL□22M1**	**AH165-2FL5□22M1**	
			3NO+3NC	**AH165-2FL□33M1**	**AH165-2FL5□33M1**	
Extended round head KKD07-226	Flat LED	24V DC	1NO+1NC	**AH165-2EL□11E3**	**AH165-2EL5□11E3**	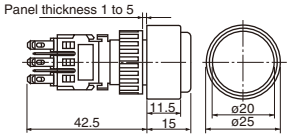
			2NO+2NC	**AH165-2EL□22E3**	**AH165-2EL5□22E3**	
			3NO+3NC	**AH165-2EL□33E3**	**AH165-2EL5□33E3**	
	Incandescent	24V AC/DC	1NO+1NC	**AH165-2EL□11E**	**AH165-2EL5□11E**	
			2NO+2NC	**AH165-2EL□22E**	**AH165-2EL5□22E**	
			3NO+3NC	**AH165-2EL□33E**	**AH165-2EL5□33E**	
	Neon	110V AC	1NO+1NC	**AH165-2EL□11H1**	**AH165-2EL5□11H1**	
			2NO+2NC	**AH165-2EL□22H1**	**AH165-2EL5□22H1**	
			3NO+3NC	**AH165-2EL□33H1**	**AH165-2EL5□33H1**	
		220V AC	1NO+1NC	**AH165-2EL□11M1**	**AH165-2EL5□11M1**	
			2NO+2NC	**AH165-2EL□22M1**	**AH165-2EL5□22M1**	
			3NO+3NC	**AH165-2EL□33M1**	**AH165-2EL5□33M1**	
Mushroom head AF87-221	Flat LED	24V DC	1NO+1NC	**AH165-2ML□11E3**	–	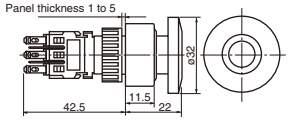
			2NO+2NC	**AH165-2ML□22E3**	–	
			3NO+3NC	**AH165-2ML□33E3**	–	
	Incandescent	24V AC/DC	1NO+1NC	**AH165-2ML□11E**	–	
			2NO+2NC	**AH165-2ML□22E**	–	
			3NO+3NC	**AH165-2ML□33E**	–	
	Neon	110V AC	1NO+1NC	**AH165-2ML□11H1**	–	
			2NO+2NC	**AH165-2ML□22H1**	–	
			3NO+3NC	**AH165-2ML□33H1**	–	
		220V AC	1NO+1NC	**AH165-2ML□11M1**	–	
			2NO+2NC	**AH165-2ML□22M1**	–	
			3NO+3NC	**AH165-2ML□33M1**	–	
Mushroom head with square bezel AF87-220	Flat LED	24V DC	1NO+1NC	**AH165-2YML□11E3**	–	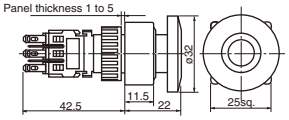
			2NO+2NC	**AH165-2YML□22E3**	–	
			3NO+3NC	**AH165-2YML□33E3**	–	
	Incandescent	24V AC/DC	1NO+1NC	**AH165-2YML□11E**	–	
			2NO+2NC	**AH165-2YML□22E**	–	
			3NO+3NC	**AH165-2YML□33E**	–	
	Neon	110V AC	1NO+1NC	**AH165-2YML□11H1**	–	
			2NO+2NC	**AH165-2YML□22H1**	–	
			3NO+3NC	**AH165-2YML□33H1**	–	
		220V AC	1NO+1NC	**AH165-2YML□11M1**	–	
			2NO+2NC	**AH165-2YML□22M1**	–	
			3NO+3NC	**AH165-2YML□33M1**	–	

Note: Replace the □ mark by the following color code, *see page C1-219.*

AH165-2

■ Illuminated pushbutton switches

Operator	Lamp	Voltage	Contact	Momentary action Type	Alternate action Type	Dimensions, mm
Flush square head KKD07-224	Flat LED	24V DC	1NO+1NC	**AH165-2SFL□11E3**	**AH165-2SFL5□11E3**	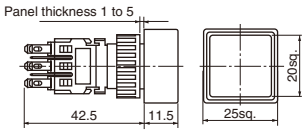
			2NO+2NC	**AH165-2SFL□22E3**	**AH165-2SFL5□22E3**	
			3NO+3NC	**AH165-2SFL□33E3**	**AH165-2SFL5□33E3**	
	Incandescent	24V AC/DC	1NO+1NC	**AH165-2SFL□11E**	**AH165-2SFL5□11E**	
			2NO+2NC	**AH165-2SFL□22E**	**AH165-2SFL5□22E**	
			3NO+3NC	**AH165-2SFL□33E**	**AH165-2SFL5□33E**	
	Neon	110V AC	1NO+1NC	**AH165-2SFL□11H1**	**AH165-2SFL5□11H1**	
			2NO+2NC	**AH165-2SFL□22H1**	**AH165-2SFL5□22H1**	
			3NO+3NC	**AH165-2SFL□33H1**	**AH165-2SFL5□33H1**	
		220V AC	1NO+1NC	**AH165-2SFL□11M1**	**AH165-2SFL5□11M1**	
			2NO+2NC	**AH165-2SFL□22M1**	**AH165-2SFL5□22M1**	
			3NO+3NC	**AH165-2SFL□33M1**	**AH165-2SFL5□33M1**	
Extended square head KKD18-308	Flat LED	24V DC	1NO+1NC	**AH165-2SEL□11E3**	**AH165-2SEL5□11E3**	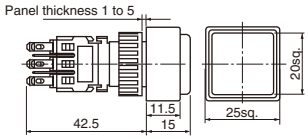
			2NO+2NC	**AH165-2SEL□22E3**	**AH165-2SEL5□22E3**	
			3NO+3NC	**AH165-2SEL□33E3**	**AH165-2SEL5□33E3**	
	Incandescent	24V AC/DC	1NO+1NC	**AH165-2SEL□11E**	**AH165-2SEL5□11E**	
			2NO+2NC	**AH165-2SEL□22E**	**AH165-2SEL5□22E**	
			3NO+3NC	**AH165-2SEL□33E**	**AH165-2SEL5□33E**	
	Neon	110V AC	1NO+1NC	**AH165-2SEL□11H1**	**AH165-2SEL5□11H1**	
			2NO+2NC	**AH165-2SEL□22H1**	**AH165-2SEL5□22H1**	
			3NO+3NC	**AH165-2SEL□33H1**	**AH165-2SEL5□33H1**	
		220V AC	1NO+1NC	**AH165-2SEL□11M1**	**AH165-2SEL5□11M1**	
			2NO+2NC	**AH165-2SEL□22M1**	**AH165-2SEL5□22M1**	
			3NO+3NC	**AH165-2SEL□33M1**	**AH165-2SEL5□33M1**	
Concave square head KKD18-307	Flat LED	24V DC	1NO+1NC	**AH165-2SCL□11E3**	**AH165-2SCL5□11E3**	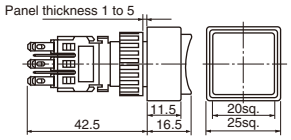
			2NO+2NC	**AH165-2SCL□22E3**	**AH165-2SCL5□22E3**	
			3NO+3NC	**AH165-2SCL□33E3**	**AH165-2SCL5□33E3**	
	Incandescent	24V AC/DC	1NO+1NC	**AH165-2SCL□11E**	**AH165-2SCL5□11E**	
			2NO+2NC	**AH165-2SCL□22E**	**AH165-2SCL5□22E**	
			3NO+3NC	**AH165-2SCL□33E**	**AH165-2SCL5□33E**	
	Neon	110V AC	1NO+1NC	**AH165-2SCL□11H1**	**AH165-2SCL5□11H1**	
			2NO+2NC	**AH165-2SCL□22H1**	**AH165-2SCL5□22H1**	
			3NO+3NC	**AH165-2SCL□33H1**	**AH165-2SCL5□33H1**	
		220V AC	1NO+1NC	**AH165-2SCL□11M1**	**AH165-2SCL5□11M1**	
			2NO+2NC	**AH165-2SCL□22M1**	**AH165-2SCL5□22M1**	
			3NO+3NC	**AH165-2SCL□33M1**	**AH165-2SCL5□33M1**	

Note: Replace the □ mark by the following color code, *see page C1-219.*

■ Illuminated pushbutton switches

Operator	Lamp	Voltage	Contact	Type	Dimensions, mm
Push-lock, turn-reset KKD18-311	Flat LED	24V DC	1NO+1NC	**AH165-2VL□11E3**	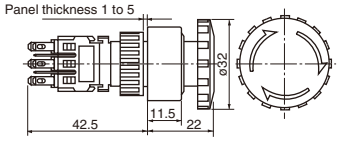
			2NO+2NC	**AH165-2VL□22E3**	
			3NO+3NC	**AH165-2VL□33E3**	
	Incandescent	24V AC/DC	1NO+1NC	**AH165-2VL□11E**	
			2NO+2NC	**AH165-2VL□22E**	
			3NO+3NC	**AH165-2VL□33E**	
	Neon	110V AC	1NO+1NC	**AH165-2VL□11H1**	
			2NO+2NC	**AH165-2VL□22H1**	
			3NO+3NC	**AH165-2VL□33H1**	
		220V AC	1NO+1NC	**AH165-2VL□11M1**	
			2NO+2NC	**AH165-2VL□22M1**	
			3NO+3NC	**AH165-2VL□33M1**	
Push-lock, turn-reset with square bezel KKD18-314	Flat LED	24V DC	1NO+1NC	**AH165-2YVL□11E3**	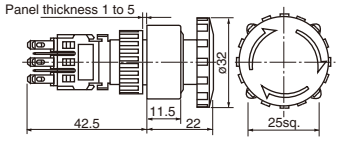
			2NO+2NC	**AH165-2YVL□22E3**	
			3NO+3NC	**AH165-2YVL□33E3**	
	Incandescent	24V AC/DC	1NO+1NC	**AH165-2YVL□11E**	
			2NO+2NC	**AH165-2YVL□22E**	
			3NO+3NC	**AH165-2YVL□33E**	
	Neon	110V AC	1NO+1NC	**AH165-2YVL□11H1**	
			2NO+2NC	**AH165-2YVL□22H1**	
			3NO+3NC	**AH165-2YVL□33H1**	
		220V AC	1NO+1NC	**AH165-2YVL□11M1**	
			2NO+2NC	**AH165-2YVL□22M1**	
			3NO+3NC	**AH165-2YVL□33M1**	

• **Button color**

Replace the □ mark by the following button color code

Color	Green	Red	White	Yellow	Blue	Orange
Code	G	R	W	Y	S	O

• With wire-wrap pin terminals have a depth of 47mm.

• A white illuminated pushbutton is fitted with a transparent color lens.
• The color lens is made of a tinted transparent material.

• **Lamp voltage**

Voltages other than above are available

Code	LED	Incandescent	Neon
AA	5V DC	–	–
A	6V DC	5V AC/DC	–
B	12V DC	12V AC/DC	–
K	–	–	120V AC
P	–	–	240V AC

AH165-2

■ Pushbutton switches

Operator	Contact	Momentary action Type	Alternate action Type	Dimensions, mm
Flush round head KKD07-228	1NO+1NC	**AH165-2F□11**	**AH165-2F5□11**	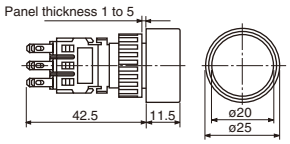
	2NO+2NC	**AH165-2F□22**	**AH165-2F5□22**	
	3NO+3NC	**AH165-2F□33**	**AH165-2F5□33**	
Flush square head KKD07-224	1NO+1NC	**AH165-2SF□11**	**AH165-2SF5□11**	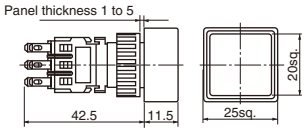
	2NO+2NC	**AH165-2SF□22**	**AH165-2SF5□22**	
	3NO+3NC	**AH165-2SF□33**	**AH165-2SF5□33**	
Extended round head KKD07-229	1NO+1NC	**AH165-2E□11**	**AH165-2E5□11**	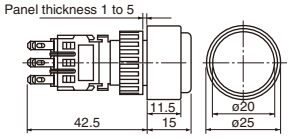
	2NO+2NC	**AH165-2E□22**	**AH165-2E5□22**	
	3NO+3NC	**AH165-2E□33**	**AH165-2E5□33**	
Extended square head KKD18-308	1NO+1NC	**AH165-2SE□11**	**AH165-2SE5□11**	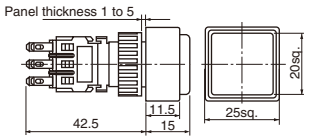
	2NO+2NC	**AH165-2SE□22**	**AH165-2SE5□22**	
	3NO+3NC	**AH165-2SE□33**	**AH165-2SE5□33**	
Concave square head KKD18-307	1NO+1NC	**AH165-2SCE□11**	**AH165-2SCE5□11**	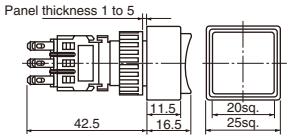
	2NO+2NC	**AH165-2SCE□22**	**AH165-2SCE5□22**	
	3NO+3NC	**AH165-2SCE□33**	**AH165-2SCE5□33**	
Mushroom head KKD18-305	1NO+1NC	**AH165-2M□11**	–	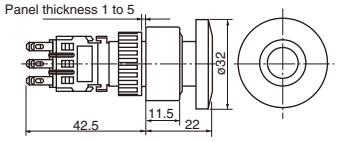
	2NO+2NC	**AH165-2M□22**	–	
	3NO+3NC	**AH165-2M□33**	–	
Mushroom head with square bezel AF87-214	1NO+1NC	**AH165-2YM□11**	–	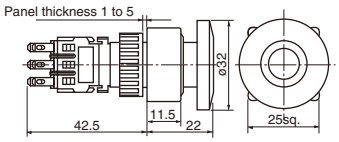
	2NO+2NC	**AH165-2YM□22**	–	
	3NO+3NC	**AH165-2YM□33**	–	

Note: Replace the □ mark by the following color code, *see page C1-221.*

■ Pushbutton switches

Operator	Contact	Type	Dimensions, mm
With selector ring KKD18-306	2NO+2NC	**AH165-2S2□22**	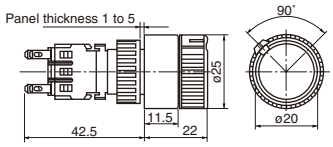
With selector ring with square bezel KKD18-313	2NO+2NC	**AH165-2YS2□22**	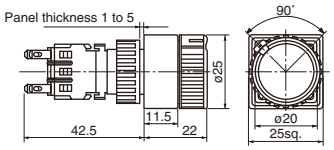
Push-lock, turn-reset KKD18-312	1NO+1NC 2NO+2NC 3NO+3NC	**AH165-2V□11** **AH165-2V□22** **AH165-2V□33**	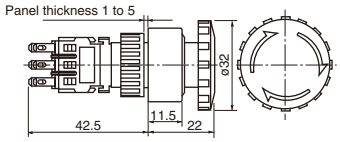
Push-lock, turn-reset with square bezel KKD18-315	1NO+1NC 2NO+2NC 3NO+3NC	**AH165-2YV□11** **AH165-2YV□22** **AH165-2YV□33**	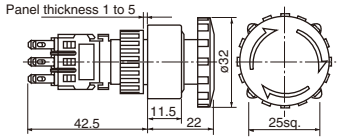

• Button color

Replace the □ mark by the following button color code

Color	Green	Red	Black	White	Blue	Yellow	Orange
Code	G	R	B	W	S	Y	O

• Contact arrangement and operator position

AH165-2S, 2YS

Ring / Button	Left	Right
Free	U L 1 2 1 2 3 4 3 4	U L 1 2 1 2 3 4 3 4
Depressed	1 2 1 2 3 4 3 4	1 2 1 2 3 4 3 4

U: Upper contact block
L: Lower contact block

- The color lens is made of a tinted transparent material. (Except for M, YM, V, YV, types)
- A white pushbutton is fitted with a transparent color lens. A black pushbutton consists of a transparent color lens and an attached black legend plate. (Except for M, YM, V, YV, types)
- With wire-wrap pin terminals have a depth of 47mm.

• Terminal number and contact block position

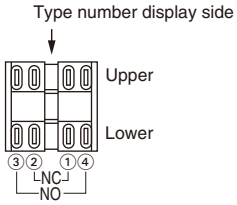

AH165-2

■ Selector switches/2-position (90-degree)

Operator	Operation	Key removable position	Contact	Type	Dimensions, mm
Knob KKD07-232	Maintained	–	1NO+1NC 2NO+2NC 3NO+3NC	**AH165-2P2B11** **AH165-2P2B22** **AH165-2P2B33**	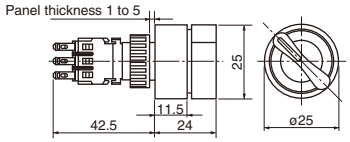
	Spring return	–	1NO+1NC 2NO+2NC 3NO+3NC	**AH165-2P0B11** **AH165-2P0B22** **AH165-2P0B33**	
Knob KKD07-234	Maintained	–	1NO+1NC 2NO+2NC 3NO+3NC	**AH165-2YP2B11** **AH165-2YP2B22** **AH165-2YP2B33**	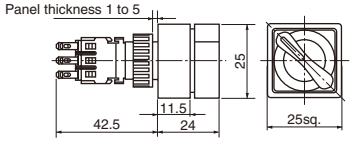
	Spring return	–	1NO+1NC 2NO+2NC 3NO+3NC	**AH165-2YP0B11** **AH165-2YP0B22** **AH165-2YP0B33**	
Key KKD09-003L	Maintained	A	1NO+1NC 2NO+2NC 3NO+3NC	**AH165-2J2A11A** **AH165-2J2A22A** **AH165-2J2A33A**	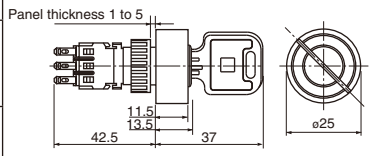
		B	1NO+1NC 2NO+2NC 3NO+3NC	**AH165-2J2B11A** **AH165-2J2B22A** **AH165-2J2B33A**	
		D	1NO+1NC 2NO+2NC 3NO+3NC	**AH165-2J2D11A** **AH165-2J2D22A** **AH165-2J2D33A**	
	Spring return	A	1NO+1NC 2NO+2NC 3NO+3NC	**AH165-2J0A11A** **AH165-2J0A22A** **AH165-2J0A33A**	
Key with square bezel KKD09-003R	Maintained	A	1NO+1NC 2NO+2NC 3NO+3NC	**AH165-2YJ2A11A** **AH165-2YJ2A22A** **AH165-2YJ2A33A**	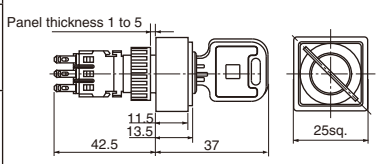
		B	1NO+1NC 2NO+2NC 3NO+3NC	**AH165-2YJ2B11A** **AH165-2YJ2B22A** **AH165-2YJ2B33A**	
		D	1NO+1NC 2NO+2NC 3NO+3NC	**AH165-2YJ2D11A** **AH165-2YJ2D22A** **AH165-2YJ2D33A**	
	Spring return	A	1NO+1NC 2NO+2NC 3NO+3NC	**AH165-2YJ0A11A** **AH165-2YJ0A22A** **AH165-2YJ0A33A**	

- The key can be removed only at the following positions:

A: ⊘ B: ⊗ D: ⊘

- For spring-return selector switches, the key can be removed at position A.
- There are 6 available key types; A, B, C, D, E and F. Standard key code is A.
- With wire-wrap pin terminals have a depth of 47mm.

- **Terminal number and contact block position**

Type number display side

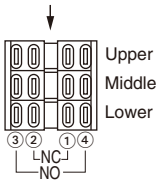

Contact arrangement (terminal No.: common)
1NO+1NC: Middle
2NO+2NC: Upper, lower
3NO+3NC: Upper, middle, lower

- **Contact arrangement and operator positions:**

2-position

Contact arrangement		1NO+1NC	2NO+2NC	3NO+3NC
Operator position	Left ⊘	M: 1 – 2, 3 – 4	U: 1 – 2, 3 – 4 L: 1 – 2, 3 – 4	U: 1 – 2, 3 – 4 M: 1 – 2, 3 – 4 L: 1 – 2, 3 – 4
	Right ⊘	M: 1 – 2, 3 – 4	U: 1 – 2, 3 – 4 L: 1 – 2, 3 – 4	U: 1 – 2, 3 – 4 M: 1 – 2, 3 – 4 L: 1 – 2, 3 – 4

U: Upper contact block
M: Middle contact block
L: Lower contact block

Fuji Electric FA Components & Systems Co., Ltd.
Information subject to change without notice

■ Selector switches/2-position

Operator	Lever color	Operation	Contact	Type	Dimensions, mm
Lever KKD18-304	Black	Maintained	1NO+1NC	**AH165-2H2B11**	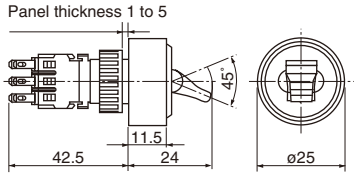
			2NO+2NC	**AH165-2H2B22**	
			3NO+3NC	**AH165-2H2B33**	
Lever with square bezel KKD18-309	Black	Maintained	1NO+1NC	**AH165-2SH2B11**	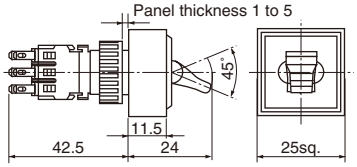
			2NO+2NC	**AH165-2SH2B22**	
			3NO+3NC	**AH165-2SH2B33**	

• **Contact arrangement and operator position**

AH165-2H, 2SH

Lever / Contact block	Up	Down
1NO+1NC		
2NO+2NC	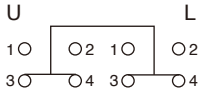	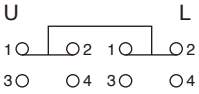
3NO+3NC	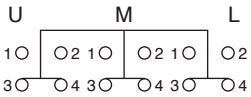	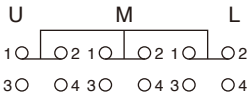

U: Upper contact block
M: Middle contact block
L: Lower contact block

• With wire-wrap pin terminals have a depth of 47mm.

• **Terminal number and contact block position**

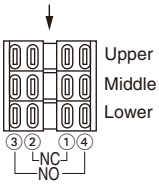

Contact arrangement (terminal No.: common)
1NO+1NC: Middle
2NO+2NC: Upper, lower
3NO+3NC: Upper, middle, lower

AH165-2

■ Selector switches/3-position (45-degree)

Operator	Operation	Key removable position	Contact	Type	Dimensions, mm
Knob KKD07-233	Mainteined	–	2NO+2NC 3NO+3NC	**AH165-2P3B22** **AH165-2P3B33**	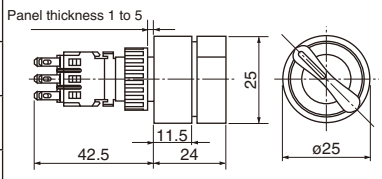
	Spring/ manual return	–	2NO+2NC 3NO+3NC	**AH165-2P6B22** **AH165-2P6B33**	
	Spring/ manual return	–	2NO+2NC 3NO+3NC	**AH165-2P7B22** **AH165-2P7B33**	
	Spring return	–	2NO+2NC 3NO+3NC	**AH165-2P1B22** **AH165-2P1B33**	
Knob with square bezel 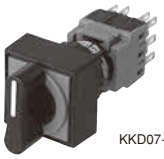 KKD07-235	Mainteined	–	2NO+2NC 3NO+3NC	**AH165-2YP3B22** **AH165-2YP3B33**	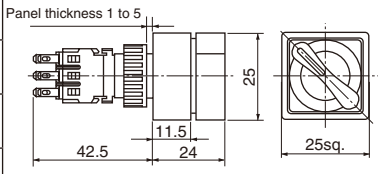
	Spring/ manual return	–	2NO+2NC 3NO+3NC	**AH165-2YP6B22** **AH165-2YP6B33**	
	Spring/ manual return	–	2NO+2NC 3NO+3NC	**AH165-2YP7B22** **AH165-2YP7B33**	
	Spring return	–	2NO+2NC 3NO+3NC	**AH165-2YP1B22** **AH165-2YP1B33**	
Key KKD09-003R	Mainteined	A	2NO+2NC 3NO+3NC	**AH165-2J3A22A** **AH165-2J3A33A**	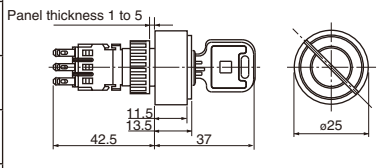
		E	2NO+2NC 3NO+3NC	**AH165-2J3E22A** **AH165-2J3E33A**	
		D	2NO+2NC 3NO+3NC	**AH165-2J3D22A** **AH165-2J3D33A**	
		C	2NO+2NC 3NO+3NC	**AH165-2J3C22A** **AH165-2J3C33A**	
	Spring/ manual return	E	2NO+2NC 3NO+3NC	**AH165-2J6E22A** **AH165-2J6E33A**	
		D	2NO+2NC 3NO+3NC	**AH165-2J6D22A** **AH165-2J6D33A**	
	Spring/ manual return	A	2NO+2NC 3NO+3NC	**AH165-2J7A22A** **AH165-2J7A33A**	
		E	2NO+2NC 3NO+3NC	**AH165-2J7E22A** **AH165-2J7E33A**	
	Spring return	E	2NO+2NC 3NO+3NC	**AH165-2J1E22A** **AH165-2J1E33A**	
Key with square bezel 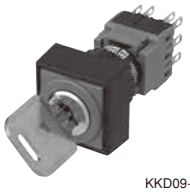 KKD09-003L	Mainteined	A	2NO+2NC 3NO+3NC	**AH165-2YJ3A22A** **AH165-2YJ3A33A**	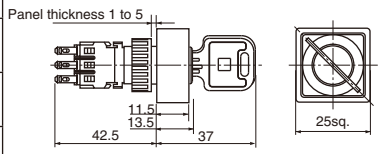
		E	2NO+2NC 3NO+3NC	**AH165-2YJ3E22A** **AH165-2YJ3E33A**	
		D	2NO+2NC 3NO+3NC	**AH165-2YJ3D22A** **AH165-2YJ3D33A**	
		C	2NO+2NC 3NO+3NC	**AH165-2YJ3C22A** **AH165-2YJ3C33A**	
	Spring/ manual return	E	2NO+2NC 3NO+3NC	**AH165-2YJ6E22A** **AH165-2YJ6E33A**	
		D	2NO+2NC 3NO+3NC	**AH165-2YJ6D22A** **AH165-2YJ6D33A**	
	Spring/ manual return	A	2NO+2NC 3NO+3NC	**AH165-2YJ7A22A** **AH165-2YJ7A33A**	
		E	2NO+2NC 3NO+3NC	**AH165-2YJ7E22A** **AH165-2YJ7E33A**	
	Spring return	E	2NO+2NC 3NO+3NC	**AH165-2YJ1E22A** **AH165-2YJ1E33A**	

• The Key can be removed at the following positions:

A: B: C: D: E: F: G:

For spring-return selector switches, the key can be removed only at position E. For manual/spring-return selector switches, the key can be removed at positions D, E and F for type J6, and position A, E and G for type J7.

• There are 6 available key types; A, B, C, D, E and F.
Standard key code is A.

• With wire-wrap pin terminals have a depth of 47mm.

• Contact arrangement and operator positions:

Contact arrangement		2NO+2NC	3NO+3NC
Operator position	Left	1 U 2 1 L 2 3 4 3 4	1 U 2 1 M 2 1 L 2 3 4 3 4 3 4
	Center	1 2 1 2 3 4 3 4	1 2 1 2 1 2 3 4 3 4 3 4
	Right	1 2 1 2 3 4 3 4	1 2 1 2 1 2 3 4 3 4 3 4

U: Upper contact block M: Middle contact block L: Lower contact block

• Contact block positions: *See page C1-223*

■ Illuminated selector switches

Operator	Operation	Lamp voltage	No. of positions	Contact	Type	Dimensions, mm
Knob KKD07-240	Maintained	Flat LED 24V DC	2	1NO+1NC	**AH165-2PL2□11E3**	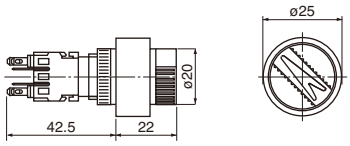
				2NO+2NC	**AH165-2PL2□22E3**	
			3	2NO+2NC	**AH165-2PL3□22E3**	
		Incandescent 24V AC/DC	2	1NO+1NC	**AH165-2PL2□11E**	
				2NO+2NC	**AH165-2PL2□22E**	
			3	2NO+2NC	**AH165-2PL3□22E**	
		Neon 110V AC	2	1NO+1NC	**AH165-2PL2□11H1**	
				2NO+2NC	**AH165-2PL2□22H1**	
			3	2NO+2NC	**AH165-2PL3□22H1**	
		Neon 220V AC	2	1NO+2NC	**AH165-2PL2□11M1**	
				2NO+2NC	**AH165-2PL2□22M1**	
			3	2NO+2NC	**AH165-2PL3□22M1**	

• Knob color (arrow)

Replace the □ mark by the following color code

Color	Green	Red	White	Blue	Yellow	Orange
Code	G	R	W	S	Y	O

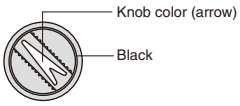

• Lamp voltage

Voltages other than above are available

Code	LED	Incandescent	Neon
AA	5V DC	–	–
A	6V DC	5V AC/DC	–
B	12V DC	12V AC/DC	–
K	–	–	120V AC
P	–	–	240V AC

• Terminal number and contact block position

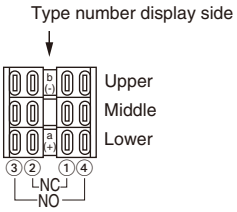

Contact arrangement (terminal No.: common)
1NO+1NC: Middle
2NO+2NC: Upper, lower

• Contact arrangement and operator positions:

2-position

Contact arrangement		1NO+1NC	2NO+2NC
Operator position	Left	M 1 2 3 4	U 1 2 3 4 L 1 2 3 4
	Right	M 1 2 3 4	U 1 2 3 4 L 1 2 3 4

2-position

Contact arrangement		2NO+2NC
Operator position	Left	U 1 2 3 4 L 1 2 3 4
	Center	U 1 2 3 4 L 1 2 3 4
	Right	U 1 2 3 4 L 1 2 3 4

U: Upper contact block
M: Middle contact block
L: Lower contact block

AH165-2

■ Pilot lights

Lens	Lamp	Voltage	Type	Dimensions, mm
Flush round KKD18-316	Flat LED	24V DC	**AH165-2Z□E3**	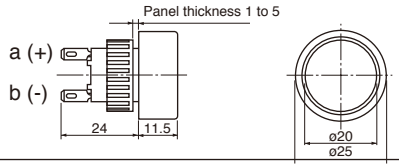
	Incandescent	24V AC/DC	**AH165-2Z□E**	
	Neon	110V AC	**AH165-2Z□H1**	
		220V AC	**AH165-2Z□M1**	
Flush square KKD07-230	Flat LED	24V DC	**AH165-2SZ□E3**	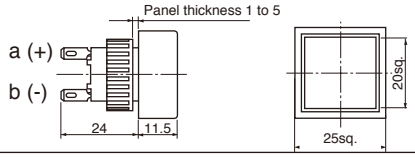
	Incandescent	24V AC/DC	**AH165-2SZ□E**	
	Neon	110V AC	**AH165-2SZ□H1**	
		220V AC	**AH165-2SZ□M1**	
Extended round KKD07-231	Flat LED	24V DC	**AH165-2ZE□E3**	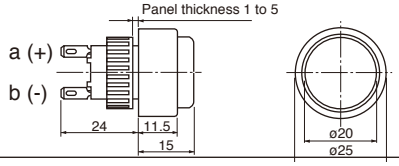
	Incandescent	24V AC/DC	**AH165-2ZE□E**	
	Neon	110V AC	**AH165-2ZE□H1**	
		220V AC	**AH165-2ZE□M1**	
Extended square KKD18-310	Flat LED	24V DC	**AH165-2SZE□E3**	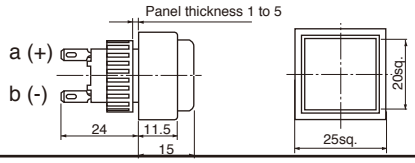
	Incandescent	24V AC/DC	**AH165-2SZE□E**	
	Neon	110V AC	**AH165-2SZE□H1**	
		220V AC	**AH165-2SZE□M1**	

• Lens color

Replace the □ mark by the following lens color code

Color	Green	Red	White	Yellow	Blue	Orange
Code	G	R	W	Y	S	O

• Lamp voltage

Voltage other than above is available

Code	LED	Incandescent	Neon
AA	5V DC	–	–
A	6V DC	5V AC/DC	–
B	12V DC	12V AC/DC	–
K	–	–	120V AC
P	–	–	240V AC

• The color lens is made of a tinted transparent material.
• A white lens is fitted with a transparent color lens.
• With wire-wrap pin terminals have a depth of 29mm.

AH165-2
Mounting space

■ Mounting space, mm

• **Illuminated pushbuttons, pushbuttons, selector switches, illuminated selector switches and pilot lights**

Round head

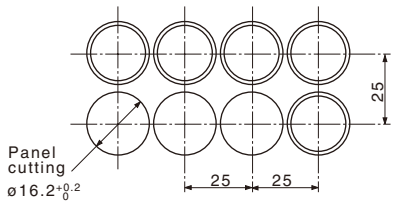

Square head

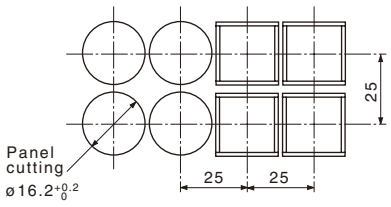

Mushroom head
Push-lock, turn-reset

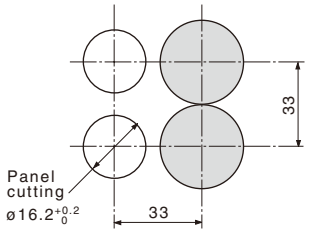

Terminal number

Type	Wiring	Terminal position
Illuminated pushbuttons, Illuminated selector switches	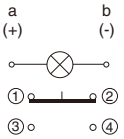	Type number display side 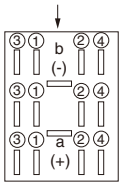
Pushbuttons Selector swiches	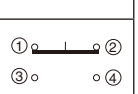	
Pilot lights (without transformer)		Type number display side 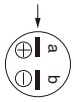

AH164, AH165 and AH165-2
Notes on use

Notes on use

■ Installation on panel

• For installation, use dedicated wrench AHX601. The appropriate tightening torque is 0.6 to 1N·cm.
• The installation sequence is as follows:
Pass the operator base through the hole in the panel and secure it by tightening the bezel. Properly position the catch arms of the contact holder and the catch legs of the operator base and push the contact holder onto the operator base. To remove the contact holder, pull it while pressing the catch arms inward.

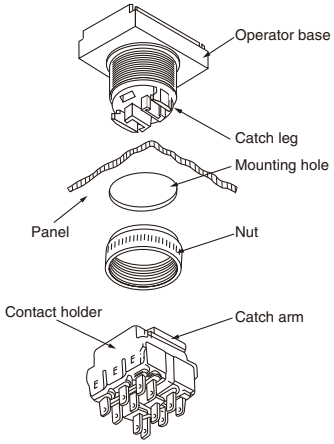

■ Mounting steps of switch with transformer

①Pass the switch operator through the panel hole and secure with a nut by way of the retainer metal from the front of the panel.
②Align the position of the catch arm of the contact block holder with that of the catch leg of the switch operator. Engage these two catches by pushing them together.
③Insert and secure the transformer unit while assembling the contact block holder with the retainer metal.
④Connect the receptacle terminal with lead wires extending from the transformer to the lamp terminal of the contact block holder. (Be care on the polarity of the LED. Red: +, Black: –)
⑤Push in and secure the standard accessory insulation cover by aligning its position with each terminal. To replace the transformer, remove the transformer by widening the catch leg of the contact block holder. Pay attention not to excessively widen the catch leg. Mounting steps are the same as the above steps ③, ④, and ⑤.

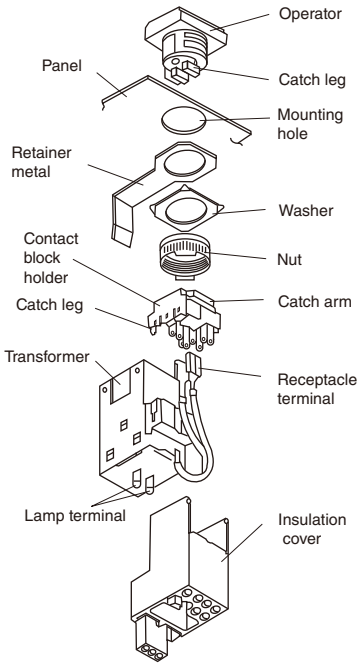

■ Installing the protection cover / dust-tight cover, guard-ring

Be careful that the panel thickness does not exceed the following:
Panel thickness
Protection cover: 2.6mm max.
Dust-tight cover: 2.0mm max.
Guard ring: 2.5mm max.

■ Operating voltage and rated voltage of incandescent lamps

Rated voltage	Operating voltage
6V	4 to 5V
14V	10 to 12V
28V (Standard)	20 to 24V

Incandescent lamps should be operated at the operating voltages if a lamp service life of 5,000 to 10,000 hours are needed. The ambient temperature must not exceed 30°C if the lamp is used at the rated voltage continuously.

■ Method of replacing lamp

• Incandescent lamps/LED lamps/neon lamps
Remove the color lens and inner button with a remover AHX618.
Then draw out the lamp with a lamp changer AHX672.
When installing lamps, do it manually and in the reverse order of removing.
• Products with blue and green LEDs
The LED devices on products with high-brightness (blue and green) LEDs are very sensitive to static electricity. When replacing LED lamps do not allow static electricity to come into direct contact with the metal frame on the upper side of the LED lamp. The LED device may be damaged if this part is subjected to static electricity. When installing or removing an LED lamp, it is recommended that you use the lamp changer (AHX672).

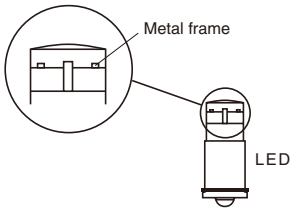

• To replace the lamp of a AH165-2 illuminated pushbutton switch (ML,VL), remove the button and draw out the oil-tight cap.

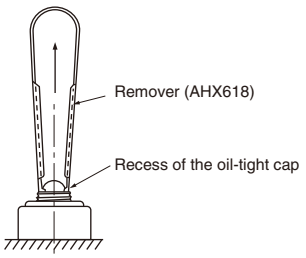

• Then, replace the lamp using a lamp changer (AHX672) and push the oil-tight cap into its original position with its engaging projection properly adjusted (see the figure below).

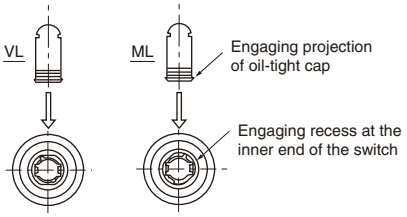

Note: Lamp of AH165-ZM type can not be replaced.

AH164, AH165 and AH165-2
Notes on use

■ Method of replacing color lens

• To remove the color lens , insert a small screwdriver into the color lens and twist in direction of the arrow.

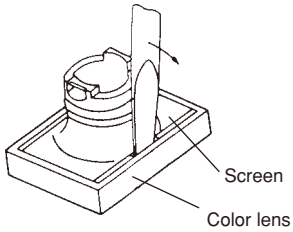

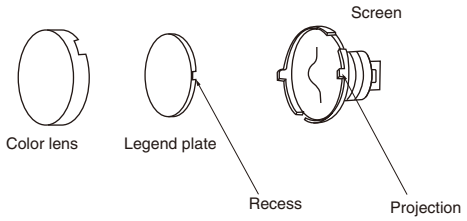

• For an AH165-2, use a small standard screwdriver or a similar tool with a flat end. If one side of the color lens is removed from the screen, insert the screwdriver or a similar tool deeper and remove the color lens together with the screen.

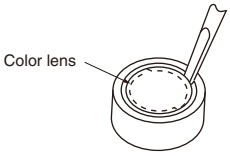

■ Replacing pushbuttons

In the case of alternative action type pushbutton switches and illuminated pushbutton switches, be sure not to replace the pushbuttons in their locked state. This could result in internal damage to the mechanism.

■ Description sheet

The Fuji description sheet is 25μm thick. If preparing custom description sheets, make sure that the thickness is 0.1mm or less.

■ Contact block

To replace a contact block, use removing tool AGX012. If excessive force is applied when attempting to open the support legs for the contact block holder, deformation or damage may occur.

■ Handling precautions

• Do not apply torque in excess of 1.0 N•m to operate the selectors switch (Type “P”). Required operating force of switches is less than 0.1 N•m.
• Do not tap on a pushbutton to turn it ON or OFF, such handling may damage it. Be sure to operate the pushbutton by hand.

■ Key type selector switch

• Five key types (Type B to Type F) are available besides Type A, which is the standard key type.
Be sure to use a key with a symbol which is matched with the symbol on the main unit.

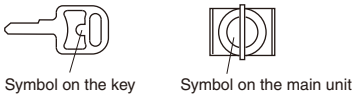

• Fully insert the key into the main unit before turning the key.
• The key turning force should not exceed 0.1 N•m.
• Do not pull out or insert the key forcibly.

■ Wiring connections

• Use a soldering iron with a wattage of not more than 30W and a tip length of more than 20mm.
Use a rosin-core solder
With a 30W iron complete soldering within 5 seconds, or 10 seconds with a 20W iron. Do not apply external force to the terminals. Do not deform the terminals.
Because lead-free solder's melting point is slightly high, soldering work may be difficult. Use a soldering iron whose tip is rather large or whose calorie is rather high.
• Wires that can be connected
Two solid wires with a maximum diameter of 0.8mm (solder)
One stranded wire with a maximum area of 0.75mm^2 (solder)
Flat connection terminal
(2.8□-1.25-5) 0.5 to 1.25mm^2
(2.8□-0.5-5) 0.2 to 0.5mm^2
• Using contact blocks
When using NO and NC contacts in the same contact block, avoid connection that involves opposite polarity or wiring from different types of power supply.
• For wiring to adjacent terminals, use insulated tubing to prevent short-circuit and to assure isolation. For solder terminals, be careful when connecting thick wires. Do not use too much solder.
• Wiring to wire-wrap pin terminals
Select the appropriate wire sizes and tools from the table below.

Wire size	Bit	Sleeve	Number of effective wraps
0.4mm dia.	3-A	1-B	About 8
0.5mm dia.	1-A	1-B	About 6
(0.65mm dia.)	(2-A)	(2-B)	(About 6)

Use ordinary wrapping for connection.
Wires of 0.65mm dia. must not be used on adjacent terminals. However, 0.65mm dia. wire can be mixed with 0.4 and 0.5mm dia. wires.
• Wiring to tab terminals
Use receptacles, No. 110.

■ Installing lamps in close order

When continuously lighting pilot lights or pressing illuminated pushbuttons installed in close order, care must be taken that the ambient temperature does not exceed the rated value.

AH164, AH165 and AH165-2
Notes on use

■ LEDs

• LED Lamp Malfunctioning

The LED lamp is lit by a very small level of current. Therefore, the it may be erroneously lit by a current leaking from the surge absorption circuit or semiconductor circuit or due to stray capacitance between cables. In that case, provide a countermeasure (e.g., connect a resistor in parallel with the LED lamp).

• Countermeasure for Malfunctioning

Shunt Resistor R or CR elements connected in parallel

Lamp malfunctions can be prevented by connecting a shunt resistor (R) or CR elements (a capacitor and resistor) in parallel with the LED lamp terminal. The resistance and CR values vary depending on the model and the operating conditions.

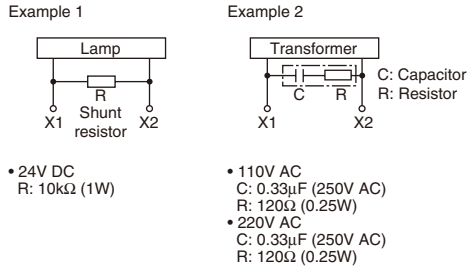

• Incoming surge

Be careful that since high luminance LED products use an element sensitive to static electricity, they may not be lit by an abnormal voltage like surge.

■ Using a flat LED in 48V DC circuit

When a flat LED lamps having a rated voltage of 24V DC is used with 48V DC circuit, connect an external resistor of 3,600Ω (1W).

■ Preventing the neon lamp from incorrectly turning ON

The neon lamp may incorrectly turn ON due to current leakage or voltage induction. In such a case, connect a shunt resistor in parallel with the lamp.

Example) 110V AC: 100kΩ (0.25W)
220V AC: 50kΩ (2W)

If an external surge of 3kV or more may occur, connect a surge absorption element in parallel with the lamp.

■ Operation

Do not use a hitting or bouncing action to operate the button, or the switch may break. Always operate the switch by hand.

■ Storage and operation site

• Use the unit within the rated operating ambient temperature and humidity ranges.
• Do not use the enclosed type in places where oil or water is sprayed or where dust accumulates. In places such as these, use the oil-tight type or provide a dust cover.
• The oil-tight type is evaluated with standard cutting oil and cooling oil applied. The oil-tight type cannot be used with some special oils.

■ Buzzer

• Noise

If the application circuit is likely to generate excessively strong noise, connect a surge absorber (e.,g., FUJI'S ENC390D, provided that the switch is a 24V type) in parallel with the buzzer.

• Place of Use

The buzzer does not have a drip-proof construction. Do not use the buzzer in places where oil or water is sprayed or where dust accumulates. If the buzzer is a splash-proof type, it will resist sprays of water.

• Do not use the buzzer in places that are subject to an excessive amount of corronsive gas.
• Be careful that the buzzer is likely to sound erroneously due to leakage current or the like.

■ Accessories for AH164 and AH165

Description		Type	
Color chips (Round)		Color	Type
	L, L5, E E5, Z	Green	**AHX631-G**
		Red	**AHX631-R**
		White (For Neon)	**AHX631-W**
		Blue	**AHX631-S**
		Yellow	**AHX631-Y**
		Orange	**AHX631-O**
		Clear	**AHX631-C**
SF-682	For LED, Neon	Green	**AHX653-G**
Color chips (Square)		Color	Type
	SL, SL5, SGL, SGL5, SF, SF5, SGF, SGF5, ZS	Green	**AHX632-G**
		Red	**AHX632-R**
		White (For Neon)	**AHX632-W**
		Blue	**AHX632-S**
		Yellow	**AHX632-Y**
		Orange	**AHX632-O**
		Clear	**AHX632-C**
SF-681	For LED, Neon	Green	**AHX653-SG**
Color chips (Rectangular)		Color	Type
	TL, TL5, TGL TGL5, TF, TF5 TGF, TGF5, ZT	Green	**AHX633-G**
		Red	**AHX633-R**
		White (For Neon)	**AHX633-W**
		Blue	**AHX633-S**
		Yellow	**AHX633-Y**
		Orange	**AHX633-O**
		Clear	**AHX633-C**
SF-680	For LED, Neon	Green	**AHX653-TG**
Mushroom head button		Color	Type
	M, M5	Green	**AHX682-G**
		Red	**AHX682-R**
		White	**AHX682-W**
		Blue	**AHX682-S**
		Yellow	**AHX682-Y**
		Orange	**AHX682-O**
SI-40		Black	**AHX682-B**
Convex square head button		Color	Type
	SM, SM5	Green	**AHX683-G**
		Red	**AHX683-R**
		White	**AHX683-W**
		Blue	**AHX683-S**
		Yellow	**AHX683-Y**
		Orange	**AHX683-O**
SI-43		Black	**AHX683-B**
Convex rectangular head button		Color	Type
	TM, TM5	Green	**AHX684-G**
		Red	**AHX684-R**
		White	**AHX684-W**
		Blue	**AHX684-S**
		Yellow	**AHX684-Y**
		Orange	**AHX684-O**
SI-44		Black	**AHX684-B**

Description	Type
Legend sheet SH-165	Round Type: **AHX615-·** Legend: ON, OFF, UP, DOWN Square Type: **AHX616-·** Legend: ON, OFF, UP, DOWN START, STOP, OPEN CLOSE, AUTO, MAN, RESET, POWER, REV, FWD, HIGH, LOW Rectangular Type: **AHX617-·** Legend: ON, OFF, UP, DOWN START, STOP, AUTO, MAN, FOWARD, REVERSE When ordering, specify desired legend in the · at the end of ordering code, Transparent blank sheets are also available. Use black oil ink.

Legend plate (Acrylic resin)		Type	Color	Dimensions, mm
	Round	**AHX665**	White	ø12.2 x 0.9
		AHX665-C	Transparent	
		AHX665-B	Black	
	Square	**AHX666**	White	12.2sq. x 0.9
		AHX666-C	Transparent	
		AHX666-B	Black	
	Rectangular	**AHX667**	White	12.2 x 18.2 x 0.9
SH-164		**AHX667-C**	Transparent	
		AHX667-B	Black	

Legend plate for spot LED (Acrylic resin)		Type	Dimensions, mm
	Round	**AHX650**	ø12.2 x 0.9
	Square	**AHX651**	12.2sq. x 0.9
	Rectangular	**AHX652**	12.2 x 18.2 x 0.9
SP-113			

Description	Type
Legend plate for selector switch (2-position) 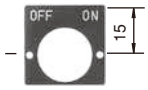 SH-226A	Type: **AHX664** Legend: ON-OFF Legend: Blank Dimensions, mm: 24sq. x 0.5

Legend plate for symbol mark		Mark	Type
	Square	○	**AHX666-E**
	Rectangular		**AHX667-E**
	Square	I	**AHX666-H**
	Rectangular		**AHX667-H**
AF87-74	Square	Ⓣ	**AHX666-T**
	Rectangular		**AHX667-T**

C1

AH164 and AH165
Accessories

Description	Type
Protection cover KKD07-246 KKD07-248 KKD07-247	For round and square head button Type: **AHX671** For rectangular head button Type: **AHX669** **AHX826** This cover protect against accidental operation. Note: Not used for illuminated pushbuttons with guard. Applicable panel thickness is 2.6mm max. Dimensions, mm 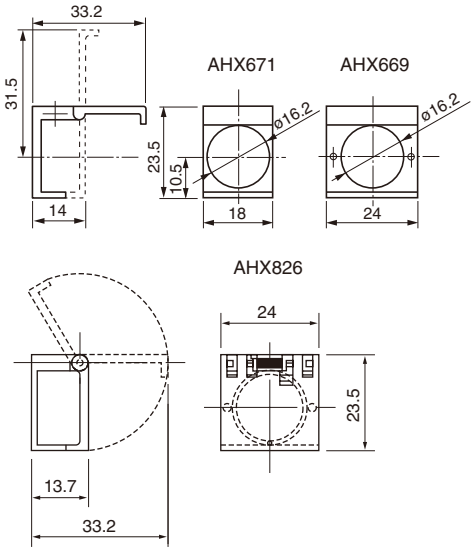
Dust-tight cover AF91-123, SI-41	For round and square head button Type: **AHX822** Dimensions, mm: 24sq. x 14.2 For rectangular head button Type: **AHX668** Dimensions, mm: 24 x 30 x 14.2 For mushroom head button Type: **AHX649** Dimensions, mm: ø30 x 18 These covers protect against dust. Note: Applicable panel thickness is 2.0mm max.
Guard ring SI-42	Type / Color / Dimensions, mm **AHX676-B** / Black / ø21 x 12 **AHX676-GY** / Gray This guard ring is used in combination with an extended round head pushbutton (L or E). Note: Applicable panel thickness is 2.5mm max. Please place an order for a packing (AHX685) separately when you intend to use for AH165 series.
Transformer AF90-949	Voltage / Type / Lamp 100 to 110V AC / **AHX805-H** / LED 200 to 220V AC / **AHX805-M** 100 to 110V AC / **AHX806-H** / Incandescent 200 to 220V AC / **AHX806-M**

■ Accessories for AH165-2

Description	Type
Color lens (Round) AF87-631	For flush head (Used with 2F, 2F5, 2FL, 2FL5, 2Z) Color / Type Green **AHX2604-G** Red **AHX2604-R** Yellow **AHX2604-Y** Blue **AHX2604-S** Orange **AHX2604-O** Clear **AHX2604-C** For extended head (Used with 2E, 2E5, 2EL, 2EL5, 2ZE) Color / Type Green **AHX2605-G** Red **AHX2605-R** Yellow **AHX2605-Y** Blue **AHX2605-S** Orange **AHX2605-O** Clear **AHX2605-C**
Color lens (Square) AF87-632	For flush head (Used with 2SF, 2SF5, 2SFL, 2SFL5, 2SZ) Color / Type Green **AHX2606-G** Red **AHX2606-R** Yellow **AHX2606-Y** Blue **AHX2606-S** Orange **AHX2606-O** Clear **AHX2606-C** For extended head (Used with 2SE, 2SE5, 2SEL, 2SEL5, 2SZE) Color / Type Green **AHX2607-G** Red **AHX2607-R** Yellow **AHX2607-Y** Blue **AHX2607-S** Orange **AHX2607-O** Clear **AHX2607-C** For concave head (Used with 2SCE, 2SCE5, 2SCL, 2SCL5) Color / Type Green **AHX2608-G** Red **AHX2608-R** Yellow **AHX2608-Y** Blue **AHX2608-S** Orange **AHX2608-O** Clear **AHX2608-C**

Description	Type
Legend plate AF87-631 AF87-630	For flush head Color / Type / Used with White **AHX2609-W** Incandescent lamp, LED lamp, Pushbutton *1 Clear **AHX2609-C** Neon lamp *2 Black **AHX2609-B** Pushbutton *3 Dimensions, mm: ø18*4 x 0.9 For extended head Color / Type / Used with White **AHX2610-W** Incandescent lamp, LED lamp, Pushbutton *1 Clear **AHX2610-C** Neon lamp *2 Black **AHX2610-B** Pushbutton *3 Dimensions, mm: ø18*4 x 4.4 For flush square Color / Type / Used with White **AHX2611-W** Incandescent lamp, LED lamp, Pushbutton *1 Clear **AHX2611-C** Neon lamp *2 Black **AHX2611-B** Pushbutton *3 Dimensions, mm: 17sq. x 0.9 For extended square, concave square Color / Type / Used with White **AHX2612-W** Incandescent lamp, LED lamp, Pushbutton *1 Clear **AHX2612-C** Neon lamp *2 Black **AHX2612-B** Pushbutton *3 Dimensions, mm: 17sq. x 4.4 *1 Illuminated pushbutton switches and pilot lights with incandescent lamps or LED lamps, Pushbutton switches (excluding). *2 Illuminated pushbutton switches and pilot lights with neon lamps. *3 Pushbutton switches (black) *4 Engraved range: 17mm dia.
Mushroom head button AF87-633	For illuminated pushbuttons (Used with 2ML, 2YML) Color / Type Green **AHX2614-G** Red **AHX2614-R** White **AHX2614-W** Yellow **AHX2614-Y** Blue **AHX2614-S** Orange **AHX2614-O** For non-illuminated pushbuttons (Used with 2M, 2YM) Color / Type Green **AHX2613-G** Red **AHX2613-R** White **AHX2613-W** Yellow **AHX2613-Y** Blue **AHX2613-S** Orange **AHX2613-O** Black **AHX2613-B**

AH165-2
Accessories

Description	Type
Push-lock, turn-reset button AF87-634	For illuminated pushbuttons (Used with 2VL, 2YVL) Color — Type Green — **AHX2616-G** Red — **AHX2616-R** White — **AHX2616-W** Yellow — **AHX2616-Y** For pushbuttons (Used with 2V, 2YV) Color — Type Green — **AHX2615-G** Red — **AHX2615-R** Yellow — **AHX2615-Y** Black — **AHX2615-B**
Dust-tight cover AF87-636	For flush round (Used with 2F, 2FL, 2F5, 2FL5) Type: **AHX2603-2** For flush square (Used with 2SF, 2SFL, 2SF5, 2SFL5) Type: **AHX2603-2S** These covers protect against dust.
Key washer AF87-635	Type: **AHX2601** Mounting hole, mm 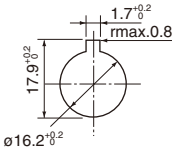

■ Accessories for AH164, AH165 and AH165-2

Description	Type
Incandescent lamp KKD06-333	Voltage / Type 6V, 0.6W **AHX641** 14V, 0.7W **AHX642** 28V, 0.7W **AHX643**
LED lamp KKD06-206	Voltage / Type 5V DC **AHX695-5 □** 6V DC **AHX695-6 □** 12V DC **AHX695-12 □** 24V DC **AHX695-24 □** Replace the · mark by the luminous color code Red (R), Green (G), Orange (O), Amber (A), Yellow (Y), Blue (S)
Neon lamp KKD06-306	Voltage / Type / Luminous color 110V AC **AHX655-H** Green **AHX654-H** Orange 120V AC **AHX655-K** Green **AHX654-K** Orange 220V AC **AHX655-M** Green **AHX654-M** Orange 240V AC **AHX655-P** Green **AHX654-P** Orange
Panel plug KKD07-262 Round KKD07-261 Square KKD07-260 Rectangular	Color / Type Round: Black **AHX622-B** IP40 Gray **AHX622-GY** IP40 Square: Black **AHX644-B** IP40 Gray **AHX644-GY** IP40 Rectangular: Black **AHX645-B** IP40 Gray **AHX645-GY** IP40 Black **AHX850-B** IP65
Lamp changer KKD07-259	Type: **AHX672** If the switch is fitted with a lamp, use this tool to remove the lamp. The tool is unnecessary when installing a lamp.
Remover KKD07-258	Type: **AHX618** This tool is used for replacing the color chips or screens.
Contact holder remover SP-522	Type: **AHX699** This tool is used to remove a contact holder when switches are densely installed.

Description	Type
Wrench KKD07-257	Type: **AHX601** When installing a command switch on a panel, this tool is useful for tightening the switch firmly and efficiently.
Terminal cover AF87-637	Type: **AHX2602** This cover is used with AH164 and AH165 and AH165-2 (except pilot lights). Pass the wires through the cover, then mount the cover in position.
Contact block KKD06-305, KKD06-304	Terminal / Type Solder/Tab **AGX001** Wire-wrap **AGX001–W**
Dummy unit SK-1141	Type: **AGX002** A dummy unit is used to fill the space where no contact blocks are installed. For example, two dummy units are used if 1NO+1NC contact block is installed, and one dummy unit is used if 2NO+2NC contact blocks are installed.
Remover SM-334	Type: **AGX012** This tool is used for replacing the contact blocks or dummy units.

AH164, AH165 and AH165-2 Accessories

Description	Type		
Sockets	Terminal	Type	Used with
SM-1097	Solder/Tab Wire-wrap PC board	**AHX697-S** **AHX697-W** **AHX697-P**	Pushbuttons
	Solder/Tab Wire-wrap PC board	**AHX697-SL** **AHX697-WL** **AHX697-PL**	Illuminated pushbuttons
	Contact arrangement is 2NO+2NC only. Except for AH165-2PL types		
Sockets for LED	Terminal	Type	
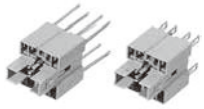 SM-1098	Solder/Tab Wire-wrap	**AHX697-SH3** **AHX697-WH3**	
	• Contact arrangement is 2NO+2NC only. • These sockets are used only when LED lamps rated for 24V DC are used under 110V AC/DC. • Except for AH164, 165 and 165-2 series pilot lights or AH165-2PL type. • When side-by-side mounting and continuous lighting, note that a socket has higher temperature over the ambient temperature.		

Dimensions, mm

Solder/Tab

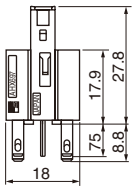

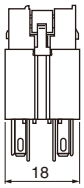

PC board mounting

Pushbuttons

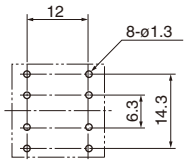

Wire-wrap

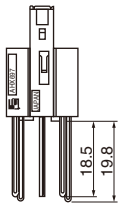

PC board

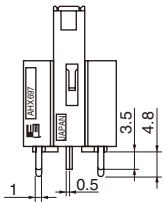

Illuminated pushbuttons

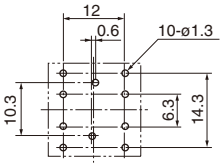

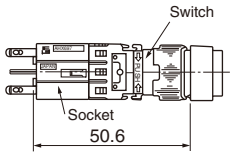

For wiring to wire-wrap pin terminals, select appropriate wire sizes and tool from the table below.

Wire size	Bit	Sleeve	Number of effective wraps
0.4mm dia.	3-A	1-B	About 8
0.5mm dia.	1-A	1-B	About 6
(0.65mm dia.)	(2-A)	(2-B)	(About 6)

Use ordinary wrapping for connection. Wires of 0.65mm dia. must not be used on adjacent terminals. However, 0.65mm dia. wire can be mixed with 0.4mm and 0.5mm dia. wires.

■ Mass, gram

AH164 series

Type	1NO + 1NC	2NO + 2NC	3NO + 3NC
AH164-L,L5 (Without transformer)	12.5	13.5	14.5
L,L5 (With transformer)	53.5	54.5	-
SL,SL5 (Without transformer)	13.1	14.1	15.1
SL,SL5 (With transformer)	54.1	55.1	-
TL,TL5 (Without transformer)	13.9	14.9	15.9
TL,TL5 (With transformer)	54.9	55.9	-
TGL,TGL5 (Without transformer)	13.9	14.9	15.9
TGL,TGL5 (With transformer)	54.9	55.9	-
SGL,SGL5 (Without	13.1	14.1	15.1
transformer)	54.1	55.1	-
SGL,SGL5 (With transformer)			
AH164-E,E5	10.5	11.5	12.5
M,M5	12.5	13.5	14.5
SF,SF5	11.1	12.1	13.1
TF,TF5	11.9	12.9	13.9
TGF,TGF5	11.9	12.9	13.9
SGF,SGF5	11.1	12.1	13.1
SM,SM5	13.4	14.4	15.4
TM,TM5	13.1	14.1	15.1
AH164-P2,P0	16.1	17.1	18.1
P3,P6,P7,P1	-	17.1	18.1
PK3,PK6,PK7,PK1	-	17.1	18.1
SP2,SP0	15.8	16.8	17.8
SP3,SP6,SP7,SP1	-	16.8	17.8
SPK3,SPK6,SPK7,SPK1	-	16.8	17.8
J2,J0	30.6	31.6	32.6
J3,J6,J7,J1	-	31.6	32.6
JK3,JK6,JK7,JK1	-	31.9	32.9
SJ2,SJ0	30.3	31.3	32.3
SJ3,SJ6,SJ7,SJ1	-	31.3	32.3
SJK3,SJK6,SJK7,SJK1	-	31.6	32.6

AH164-Z (Without transformer)	6.9
Z (With transformer)	50.9
ZS (Without transformer)	7.5
ZS (With transformer)	51.5
ZT (Without transformer)	8.2
ZT (With transformer)	52.2
AH164-TX	16
TX1	17.5
TX2B	13

AH165 series

Type	1NO + 1NC	2NO + 2NC	3NO + 3NC
AH165-L,L5 (Without transformer)	12.5	13.5	14.5
L,L5 (With transformer)	53.5	54.5	-
SL,SL5 (Without transformer)	13.1	14.1	15.1
SL,SL5 (With transformer)	54.1	55.1	-
TL,TL5 (Without transformer)	13.9	14.9	15.9
TL,TL5 (With transformer)	54.9	55.9	-
TGL,TGL5 (Without transformer)	13.9	14.9	15.9
TGL,TGL5 (With transformer)	54.9	55.9	-
SGL,SGL5 (Without transformer)	13.1	14.1	15.1
SGL,SGL5 (With transformer)	54.1	55.1	-
AH165-E,E5	10.5	11.5	12.5
M,M5	12.5	13.5	14.5
SF,SF5	11.1	12.1	13.1
TF,TF5	11.9	12.9	13.9
TGF,TGF5	11.9	12.9	13.9
SGF,SGF5	11.1	12.1	13.1
SM,SM5	13.4	14.4	15.4
TM,TM5	13.1	14.1	15.1
VR	13.4 *1	14 *2	-
V1R	14.4 *1	15 *2	-
AH165-V5R	18.1 *1	18.7 *2	-
V6R	18.9 *1	19.5 *2	-
AH165-P2,P0	16.7	17.7	18.7
P3,P6,P7,P1	-	17.7	18.7
PK3,PK6,PK7,PK1	-	17.7	18.7
SP2,SP0	16.1	17.1	18.1
SP3,SP6,SP7,SP1	-	17.1	18.1
SPK3,SPK6,SPK7,SPK1	-	17.1	18.1
J2,J0	31.2	32.2	33.2
J3,J6,J7,J1	-	32.2	33.2
JK3,JK6,JK7,JK1	-	32.5	33.5
SJ2,SJ0	30.6	31.6	32.6
SJ3,SJ6,SJ7,SJ1	-	31.6	32.6
SJK3,SJK6,SJK7,SJK1	-	31.9	32.9
AH165-JM2	30	33.9	-
RJM2	29.6	34	-

AH165-Z (Without transformer)	6.9
Z (With transformer)	50.9
ZS (Without transformer)	7.5
ZS (With transformer)	51.5
ZT (Without transformer)	8.2
ZT (With transformer)	52.2
ZM (Without transformer)	5.4
AH165-X	13.7

Note: *1 For 1NC
*2 For 2NC

AH164, AH165 and AH165-2
Mass

■ **Mass, gram**
AH165-2 series

Type	1NO + 1NC	2NO + 2NC	3NO + 3NC
AH165-2FL,FL5	15.3	16.3	17.3
2EL,EL5	15.8	16.8	17.8
2ML	18.7	19.7	20.7
2YML	20.2	21.2	22.2
2SFL,SFL5	16.6	17.6	18.6
2SEL,SEL5	17.4	18.4	19.4
2SCL,SCL5	17.6	18.6	19.6
2VL	20.7	21.7	22.7
2YVL	21.4	22.4	23.4
AH165-2F,F5	13.4	14.4	15.4
2E,E5	13.9	14.9	15.9
2M	17.8	18.8	19.8
2YM	18.2	19.2	20.2
2SF,SF5	14.6	15.6	16.6
2SE,SE5	15.4	16.4	17.4
2SCE,SCE5	15.6	16.6	17.6
2S2	-	19	-
2YS2	-	20.6	-
2V	18	19	20
2YV	19.4	20.4	21.4
AH165-2P2,P0	16.6	17.6	18.6
2P3,P6,P7,P1	-	17.6	18.6
2YP2,YP0	18.3	19.3	20.3
2YP3,YP6,YP7,YP1	-	19.3	20.3
2J2,J0	40.9	41.9	42.9
2J3,J6,J7,J1	-	41.9	42.9
2YJ2	42.6	43.6	44.6
2YJ3,YJ6,YJ7,YJ1	-	43.6	44.6
2H	14.3	15.3	16.3
2SH	16.1	17.1	18.1
AH165-2PL2	17.4	18.4	-
2PL3	-	18.4	-

AH165-2Z	9.7
2ZE	10.2
2SZ	11
2SZE	11.6

Multi display lights F series

■ General information

The generous panel size, easy wiring, and other improvements have made it easier to use than ever.

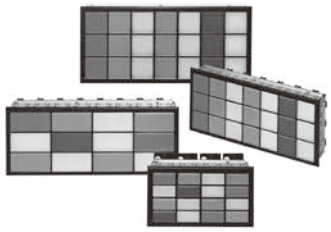

AP30F
Basic panel size
30 x 30 mm

AP40F
Basic panel size
40 x 40 mm

■ Bright and vivid hues

- 2 - 8 times the luminance.
- Comes in 7 standard colors (red, green, orange, opal, yellow, blue, pure white)

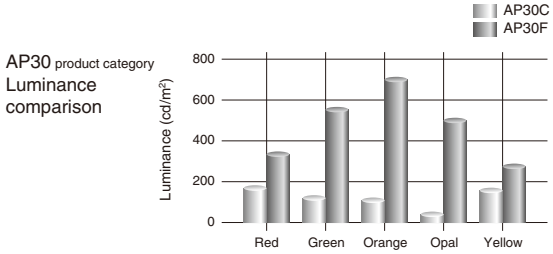

■ LEDs (R partial voltage, CR partial voltage) allow for easy color and voltage changes

- Easy to exchange from the panel surface.

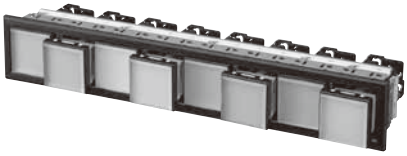

■ Energy-saving

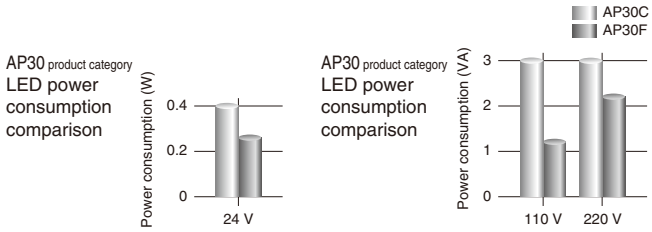

■ Live-section protective cover included as standard accessory

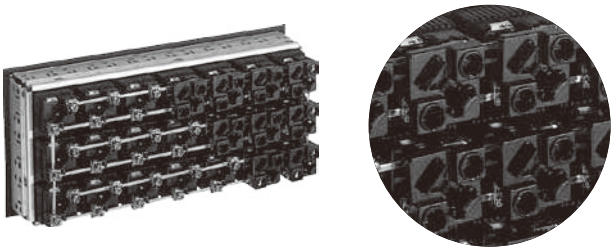

■ Number of panels

	Full voltage, R partial voltage, CR partial voltage	With transformer
AP30F model	Up to 400 panels	Up to 80 panels
AP40F model	Up to 105 panels	Up to 80 panels

■ Expanded panel size range

- We stock half-sized panels as well.

Illuminating part shape	Square (S)	Horizontal rectangle (T)	Split horizontal rectangle (T2)	Vertical rectangle (V)	Split vertical rectangle (V2)	Half size (H)
	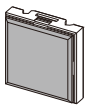	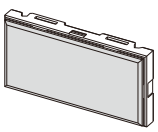	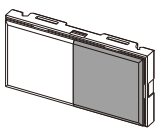	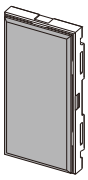	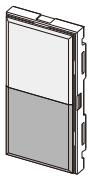	
AP30F model	30 x 30	30 x 60	30 x 60	60 x 30	60 x 30	15 x 30
AP40F model	40 x 40	40 x 80	40 x 80	80 x 40	80 x 40	20 x 40

Multi Display Lights AP30F and AP40F

■ Reduced depth length

- The 100 V and 200 V items are low-resistance, low-voltage types with 2/3 the depth of conventional products, allowing both the AP30F and AP40F models to have the same depth.

New model

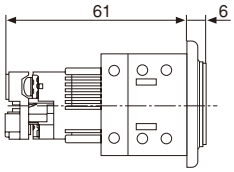

Conventional product

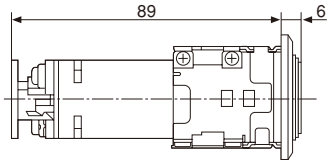

■ Lighter than ever

- Has 1/3 the mass of conventional products. (100 V/200 V LED lamps)
- The 1-panel, 1 x 2-panel, 1 x 3-panel, 2 x 2-panel, and 2 x 3-panel types for the AP30F model use an integrated resin frame.

AP30 product category
Mass comparison
(3 columns, 5 row product examples)

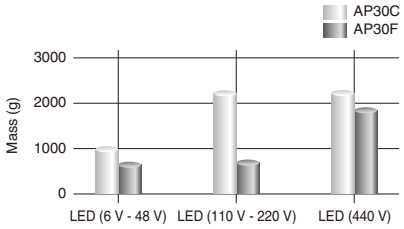

■ Easy wiring

- The terminal sections are in a staggered array, and we added space between adjacent panels to make it easier to pull the wiring out.
- Short-circuit plates (2 poles) are included as standard accessories, and 3-pole and 6-pole short-circuit plate options are available as well to make jumper connections easier.

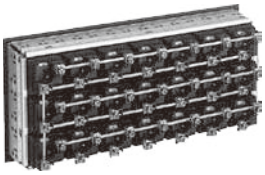

■ AP30F model available in a natural light cover specification

- The natural light cover specification allows for increased visibility.

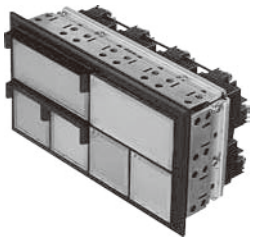

■ LEDs can display multiple colors without color panels

- Choose whether to display colors or opal when the lights are off.

Lights-off color display

Lights-off opal display

*Opal and pure white appear the same

■ Easily mount AP40F model panels in a slanted position with excellent visibility in high locations

- Mount a panel in the slanted position simply by rotating the illuminating part lens case 180 degrees and remounting.

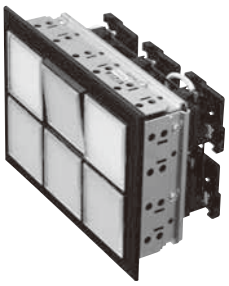

■ UL/CSA-compatible products

- Release overseas standard UL.CSA certified products (UL508, CSA C22.2 No.14)

Fuji Electric FA Components & Systems Co., Ltd.
Information subject to change without notice

■ List of Product

Type		AP30F		AP40F	
Light		LED	Incandescent lamp (BA9S/13, 1 W)	LED	Incandescent lamp (BA9S/13, 2 W)
Lamp surface type/size		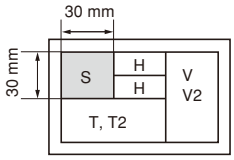	S type: (30 x 30 mm) T type: (30 x 60 mm) V type: (60 x 30 mm) H type: (15 x 30 mm) ❶	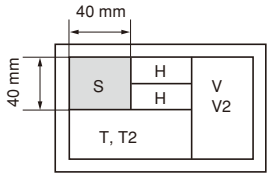	S type: (40 x 40 mm) T type: (40 x 80 mm) V type: (80 x 40 mm) H type: (20 x 40 mm) ❶
Lamp color	Red	○	○	○	○
	Green	○	○	○	○
	Yellow	○	○	○	○
	Orange	○	○	○	○
	Opal	○	○	○	○
	Blue	○	○	○	○
	Pure White	○	–	○	–
	Red/Green (two colors)	○	–	○	–
Lamp operational voltage	Full voltage	6V DC 12, 15, 24, 48V AC/DC	5.5, 15.5, 20, 24V AC/DC (6.3, 18, 24, 30V AC/DC) ❷	6 V DC 12, 15, 24, 48V AC/DC	15.5, 20, 24V AC/DC (18, 24, 30V AC/DC) ❷
	R partial voltage	100 - 110V AC/DC 115 - 127V AC/DC	–	100 - 110V AC/DC 115 - 127V AC/DC	–
	CR partial voltage	200 - 220V AC	–	200 - 220V AC	–
	With transformer	230 - 254V AC 350 - 380V AC 400 - 440V AC 480V AC	100 - 110V AC ❸ 115 - 127V AC 200 - 220V AC 230 - 254V AC 350 - 380V AC 400 - 440V AC 480V AC	230 - 254V AC 350 - 380V AC 400 - 440V AC 480V AC	100 - 110V AC 115 - 127V AC 200 - 220V AC 230 - 254V AC 350 - 380V AC 400 - 440V AC 480V AC
	Resistor unit type	–	110V DC 125V DC	–	110V DC 125V DC
	Blending type	Combination of the above for each of the panels			
Main unit frame color		Black (N1.5)			
Terminal screw		Special washer included M3.5 +, - self-lifting type			
Number of panels		Full voltage/other: 1 - 400 panels (S type conversion) With transformer: 1 - 80 panels (S type conversion)		Full voltage/other: 1 - 105 panels (S type conversion) With transformer: 1 - 80 panels (S type conversion)	
Mounting panel thickness		1 - 6 mm			
Remarks		Various accessories included (short circuit plate, disassembly tool, etc.)		・Various accessories included (short circuit plate, disassembly tool, etc.) ・Change to slanted panels: Can be chosen by shifting the illuminating part frame (lens case) 180°.	

❶ H type can only be manufactured with LED lamp full voltage (12, 15, 24 V AC/DC) products.
❷ The voltage inside ( ) indicates the lamp rating voltage.
❸ Mini transformer units are from 100 - 220 V AC. (Refer to incandescent lamp configuration on Page C1-243.)

Multi Display Lights AP30F and AP40F

■ Features

- The high brightness LED illuminated model, "PIKARI-KUN", is used for the LEDs
- Add half-size panels and combine as needed to construct the desired light display.
- LED lamp power consumption/mass greatly reduced
- LED lamp colors and voltages can be changed with ease
- Short-circuit plate (2 poles) included as a standard accessory, and up to 6 poles can be added as an option to make jumper connections easier
- LED lamps and incandescent lamps are standard options
- The panel surface sections are composed of material with an oxygen index of 26 or above

■ Ratings and Specifications

Item	Rating	Remarks
Rated insulation voltage	250V AC/DC	Full voltage, resistor unit type, R partial voltage, CR partial voltage With transformer (AP30F incandescent 100 - 220V)
	600V AC/DC	With transformer (AP30F 230 - 480V)
Dielectric strength (between grounds) (between live sections)	2000V AC, 1 minute	Full voltage, resistor unit type, R partial voltage, CR partial voltage With transformer (AP30F incandescent 100 - 220V)
	2500V AC, 1 minute	With transformer (AP30F 230 - 480V)
Insulation resistance	100MΩ or more	500V DC mega
Operational ambient temperature	-20 - +40℃	–
Relative humidity	45 - 85% RH	–
Altitude	2000m or less	–
Degree of protection	IP40 (standard enclosed IP40 type)	Indicator part (plate surface side)
Rated frequency	50/60Hz	–
Pollution degree	3	–
Terminal screw	M3.5 (self-lifting type for both + and –)	–
Terminal screw tightening torque	0.8 - 1.0N•m	–

■Maximum power consumption

Light	Lamp operational voltage		AP30F square	AP40F square			AP30F, AP40F half size
			R, G, Y, O, W, S, P	R, Y, O, W	G, S	P	R, G, Y, O, W, S, P
LED	Full voltage	6V DC	0.26W	0.33W	0.40W	0.53W	–
		12V AC/DC	0.53W 0.56VA	0.66W 0.70VA	0.79W 0.82VA	1.06W 1.30VA	0.14W 0.16VA
		15V AC/DC	0.66W 0.69VA	0.83W 0.87VA	0.99W 1.02VA	1.32W 1.62VA	0.17W 0.18VA
		24V AC/DC	0.26W 0.34VA	0.53W 0.58VA	0.53W 0.58VA	0.53W 0.65VA	0.26W 0.29VA
		48V AC/DC	0.53W 0.67VA	0.53W 0.67VA			–
	R partial voltage	100 - 110V AC/DC	1.21W 1.54VA	1.21W 1.54VA			
		115 - 127V AC/DC	1.40W 1.78VA	1.40W 1.78VA			
	CR partial voltage	200 - 220V AC	2.86VA	2.86VA			
	With transformer	230 - 254V AC	2.4VA	2.4VA			
		350 - 380V AC					
		400 - 440V AC					
		480V AC					
Incandescent	Full voltage	5.5V AC/DC	1.0W	–			
		15.5V AC/DC		2.0W			
		20V AC/DC					
		24V AC/DC					
	With transformer	100 - 110V AC	3.0VA	3.0VA			
		115 - 127V AC					
		200 - 220V AC					
		230 - 254V AC					
		350 - 380V AC					
		400 - 440V AC					
		480V AC					
	Resistor unit type	110V DC	2.0W	3.0W			
		125V DC	2.5W	3.5W			

(Note 1) Indicates the maximum power consumption per square panel. Half-size panels are excluded. (VA is indicated in terms of AC values, and Watts in terms of DC values.)
(Note 2) Rectangles are equivalent to two squares, so the maximum power consumption is double the above values.

■Mass

(Unit: g)

Light source/power source input method		AP30F		AP40F		Total mass
		A: Main unit + illuminating part + input power section	B: Side plate section	A: Main unit + illuminating part + input power section	B: Side plate section	
Incandescent lamp	Full voltage	29	26	32	28	A x total panel number + B x (number of columns + number of rows) ❶
	With mini transformer ❷	79		–		
	With transformer	107		110		
LED	Full voltage	29		38		
	R partial voltage, CR partial voltage	32		42		
	With transformer	109		121		

❶ Total panel number when square conversion occurs
❷ Mini transformer units are from 100 - 220 V AC. (Refer to incandescent lamp configuration on Page C1-243.)

Fuji Electric FA Components & Systems Co., Ltd.
Information subject to change without notice

■Configuration

●Component materials used

No.	Part	Material	Fire resistance (UL94)	Oxygen index (panel surface 26 or above) *Indicates relevant parts included
1	Lens	Polycarbonate resin	V-0	*29 - 30
2	Name plate	Acrylic resin	HB	17
3	Color plate	Acrylic resin	HB	17
4	Lens case	Polycarbonate resin	V-0	*31 - 32
5	LED unit (holder)	Polycarbonate resin	V-0	31 - 32
6	Reflector	Polycarbonate resin	V-0	31 - 32
7	Frame	PBT resin	V-0	32
8	Bezel	ABS resin	V-0	*29
9	Side plate	Aluminum	–	–
10	Base unit	Polyamide resin	V-0	37
11	Transformer unit	Polyamide resin	V-0	23
12	Live-section cover A	Polycarbonate resin	V-0	26
13	Live-section cover B	ABS resin	HB	21
14	Terminal screw	Carbon steel	–	–
15	Metal fixture	Polished steel sheet	–	–
16	Fixing screw	Carbon steel	–	–
17	Incandescent lamp	–	–	–

●LED lamp (full voltage, R partial voltage, CR partial voltage) configuration

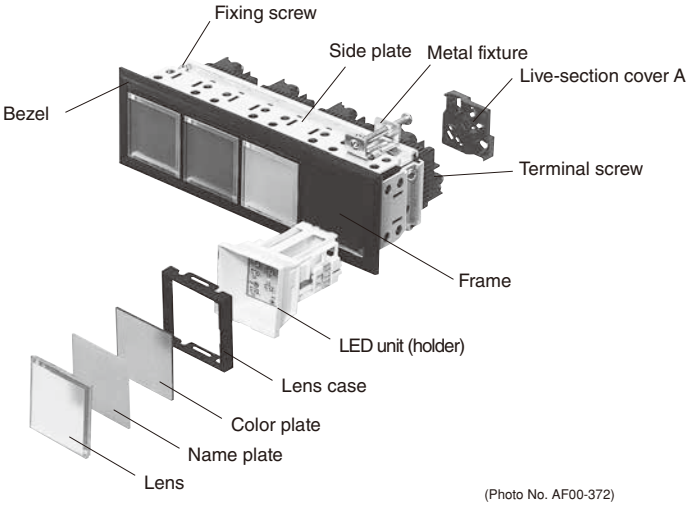

(Photo No. AF00-372)

●Incandescent lamp (full voltage, with transformer) configuration

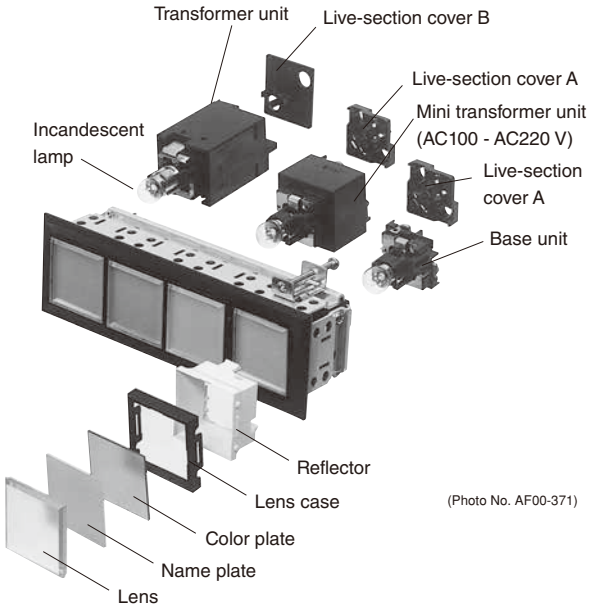

(Photo No. AF00-371)

●AP30F square LED lamp (full voltage, R partial voltage, CR partial voltage) configuration

The 1-panel, 1 x 2-panel, 1 x 3-panel, 2 x 2-panel, and 2 x 3-panel types use an integrated resin frame.

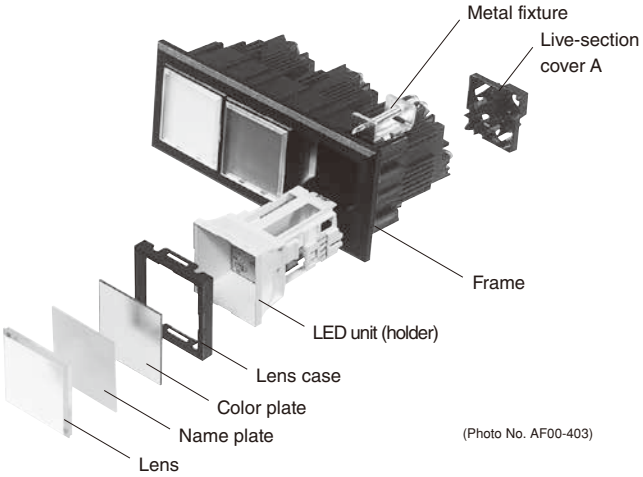

(Photo No. AF00-403)

●AP30F external optical shield specification product (for square type) configuration

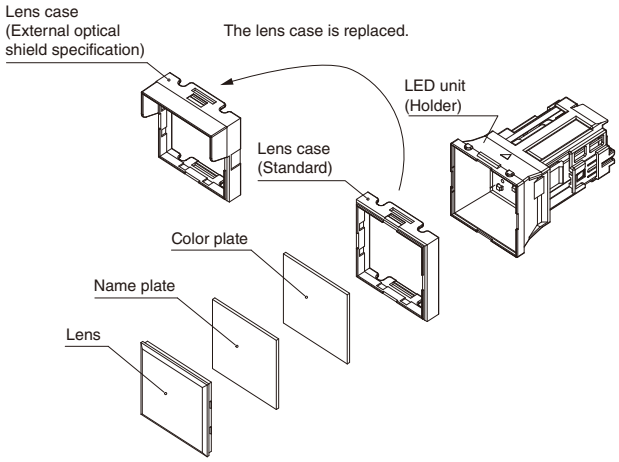

Multi Display Lights AP30F and AP40F

■Ordering Information (Type Number Nomenclature)

AP30F–04 05 □ E3–S4–

SR ( ) . SG ( ) . SY ( ) . SO ( ) . SW ( ) . SS ( ) .
CR ( ) . CG ( ) . CY ( ) . CO ( ) . CS ( )
R (5) . G (5) . Y (5) . O ( ) . W ( ) . S (5) . P ( ) . RG ( )

❿ [ ]

Basic type	Basic number of panels Vert.	Basic number of panels Horiz.	Check terminal	Lamp operational voltage	Lamp Surface Type	Lamp types	Color Specification	Code designnated by UL or Specification Sheet No.
AP30F	01	01	C: Yes ❶	・LED lamp Method: Symbol: Voltage Full voltage: A3: 6V DC ± 5% B3: 12V AC/DC ± 10% C3: 15V AC/DC ± 10% E3: 24V AC/DC ± 10% (standard) F3: 48V AC/DC ± 10% Full voltage depth reduction type: ES: 24V AC/DC ± 10% R partial voltage: H3: 100 - 110V AC/DC (standard) L3: 115 - 127V AC/DC CR partial voltage: M3: 200 - 220V AC (standard) With transformer ❷ ❽: Q3: 230 - 254V AC S3: 350 - 380V AC T3: 400 - 440V AC V3: 480V AC Blending: X3: Combination of the above (Includes spare panels) ❸ ・Incandescent lamp Full voltage: A: 5.5V (6.3V) AC/DC: 30F only C: 15.5V (18V) AC/DC D: 20V (24V) AC/DC E: 24V (30V) AC/DC (standard) ❺ With transformer ❷ ❽: H: 100 - 110V AC (standard) L: 115 - 127V AC M: 200 - 220V AC (standard) Q: 230 - 254V AC S: 350 - 380V AC T: 400 - 440V AC V: 480VA C With resistor unit ❾: H6: 110V DC L6: 125V DC Blending: X: Combination of the above ❸ ・LED, incandency combination Blending: XX: Combination of LED, incandescent indicated above ❸	S: Square (30 x 30) T: Horizontal rectangle (30 x 60) V: Vertical rectangle (60 x 30) H: Half size (15 x 30) ❻ X: Blending	No specification: Full monochrome illumination 4: Full two-color illumination ❼ 2: Split rectangle illumination	R: Red G: Green Y: Yellow O: Orange W: Opal S: Blue P: Pure White *Incandescent lamps cannot be manufactured with P (pure white). *When turned off, the color plate color is displayed. ・When an opal display is desired for LED products that are turned off	Z1:UL/CSA For the following, specify the ordering code and the arrangement on the specification sheet. ・When illuminating part shape is blended X ・LED lamp with two or more colors specified ・Input voltage blending is X3, X, or XX (Specify the position.) ・When entering name characters ❹
	02	02						
	03	03	No entry: None					
	04	04						
	05	05						
	06	06						
	07	07						
	08	08						
	09	09						
	10	10						
	11	11						
	12	12						
	13	13						
	14	14						
	15	15						
	16	16						
	17	17						
	18	18						
	19	19						
	20	20						
AP40F	01	01			S: Square (40 x 40) T: Horizontal rectangle (40 x 80) V: Vertical rectangle (80 x 40) H: Half size (20 x 40) ❻ X: Blending		CR: Red CG: Green CY: Yellow CO: Orange CS: Blue RG: Red/Green (Two-color illumination) ・For smoked lens types SR: Red SG: Green SY: Yellow SO: Orange SW: Opal SS: Blue	
	02	02						
	03	03						
	04	04						
	05	05						
	06	06						
	07	07						
		08						
		09						
		10						
		11						
		12						
		13						
		14						
		15						

❶ Only the LED lamp 24V AC/DC type can come with a check terminal. (However, this does not apply to the half-size type.)
❷ For types with transformers, limit the number of panels to 80 square panels.
❸ ・Voltage ordering code: For X, X3 and CC, specify the voltage symbol on the specification sheet.
・Spare panels (no LED unit) apply to LED full monochrome lamps (excluding check terminal). When ordering, choose voltage blending (X3) for the type and enter "spare" in the upper section of the specification sheet, and because the lower section has the terminal section indication, specify the input voltage.
❹ When entering the name characters, specify them in the name character engraving indication table on the specification sheet.
❺ The voltage inside ( ) is the lamp rating voltage.
❻ For half-size products, only the LED lamp 12, 15, or 24V AC/DC types can be manufactured.
❼ For full two-color lamps, only the LED lamp 24V AC/DC type can be manufactured.
❽ Lamps or LED units applied for transformer types

Type	Incandescent lamp	LED unit
AP30F	6.3V 1W (AHX 135)	24V (DN7Q004)
AP40F	18V 2W (AHX 141)	24V (DN8Q004)

❾ Adaptation Lamp for Resistor Unit Type

Type	Incandescent lamp
AP30F	48V 1W (AHX 407)
AP40F	48V 2W (DN7H001)

❿ UL/CSA-compatible Products
・After designating the color for the type, attach "Z1."
・Compatibility range
For AP30F and AP40F types, the maximum number of panels is 80.
For the AP30F-type with transformer, the voltage is up to 220V AC. (The AP40F model is full voltage only.)
Not applicable for the resistor unit.
Not applicable for light source (LED and incandescent) blending.
Not applicable for LED unit voltage symbol L3 (127V).
Not applicable for LED with check terminal.
Not applicable for tropical damp area models.

(Note 1) Consider the basic number of panels for one rectangular panel to be equal to two square panels.
(Note 2) Consider the basic number of panels for one half-size panel to be equal to one square panel.

■Total Panel Number Table

● AP30F type

Total Panel Number Table/S Type

(For the T and V types: convert one panel into two S-type panels. For the H type: convert two panels into one S-type panel.)

Row (Horiz.) / Column (Vert.)	01	02	03	04	05	06	07	08	09	10	11	12	13	14	15	16	17	18	19	20
01	1	2	3	4	5	6	7	8	9	10	11	12	13	14	15	16	17	18	19	20
02	2	4	6	8	10	12	14	16	18	20	22	24	26	28	30	32	34	36	38	40
03	3	6	9	12	15	18	21	24	27	30	33	36	39	42	45	48	51	54	57	60
04	4	8	12	16	20	24	28	32	36	40	44	48	52	56	60	64	68	72	76	80
05	5	10	15	20	25	30	35	40	45	50	55	60	65	70	75	80	85	90	95	100
06	6	12	18	24	30	36	42	48	54	60	66	72	78	84	90	96	102	108	114	120
07	7	14	21	28	35	42	49	56	63	70	77	84	91	98	105	112	119	126	133	140
08	8	16	24	32	40	48	56	64	72	80	88	96	104	112	120	128	136	144	152	160
09	9	18	27	36	45	54	63	72	81	90	99	108	117	126	135	144	153	162	171	180
10	10	20	30	40	50	60	70	80	90	100	110	120	130	140	150	160	170	180	190	200
11	11	22	33	44	55	66	77	88	99	110	121	132	143	154	165	176	187	198	209	220
12	12	24	36	48	60	72	84	96	108	120	132	144	156	168	180	192	204	216	228	240
13	13	26	39	52	65	78	91	104	117	130	143	156	169	182	195	208	221	234	247	260
14	14	28	42	56	70	84	98	112	126	140	154	168	182	196	210	224	238	252	266	280
15	15	30	45	60	75	90	105	120	135	150	165	180	195	210	225	240	255	270	285	300
16	16	32	48	64	80	96	112	128	144	160	176	192	208	224	240	256	272	288	304	320
17	17	34	51	68	85	102	119	136	153	170	187	204	221	238	255	272	289	306	323	340
18	18	36	54	72	90	108	126	144	162	180	198	216	234	252	270	288	306	324	342	360
19	19	38	57	76	95	114	133	152	171	190	209	228	247	266	285	304	323	342	361	380
20	20	40	60	80	100	120	140	160	180	200	220	240	260	280	300	320	340	360	380	400

● AP40F type

Total Panel Number Table/S Type

(For the T and V types: convert one panel into two S-type panels. For the H type: convert two panels into one S-type panel.)

Row (Horiz.) / Column (Vert.)	01	02	03	04	05	06	07	08	09	10	11	12	13	14	15
01	1	2	3	4	5	6	7	8	9	10	11	12	13	14	15
02	2	4	6	8	10	12	14	16	18	20	22	24	26	28	30
03	3	6	9	12	15	18	21	24	27	30	33	36	39	42	45
04	4	8	12	16	20	24	28	32	36	40	44	48	52	56	60
05	5	10	15	20	25	30	35	40	45	50	55	60	65	70	75
06	6	12	18	24	30	36	42	48	54	60	66	72	78	84	90
07	7	14	21	28	35	42	49	56	63	70	77	84	91	98	105

● Maximum number of panels manufactured (S type)

Type	Number of panels
AP30F	400 panels
AP40F	105 panels

(Note) 80 panels with transformer.

Multi Display Lights AP30F and AP40F

■AP30F Model Outline Dimensions and Panel Cutout Size (Unit: mm)

●Outline dimension A (width), B (depth), and panel cutout size D (width), E (depth)

(Both the width and depth dimensions are for the S type. For the T and V types, convert one panel into two panels. For the H type, convert two panels into one panel.)

Number of column (vert.) or row (horiz.)	1	2	3	4	5	6	7	8	9	10	11	12	13	14	15	16	17	18	19	20
Outline dimensions A, B	42	72	102	132	162	192	222	252	282	312	342	372	402	432	462	492	522	552	582	612
Panel cutout size D	35	65	95	125	155	185	215	245	275	305	335	365	395	425	455	485	515	545	575	605
Panel cutout size E	35	65	95	125	155	185	215	245	275	305	336	366	396	426	456	486	516	546	576	606

(Note) For the maximum number of panels that can be manufactured, refer to page C1-245.

●Outline drawing

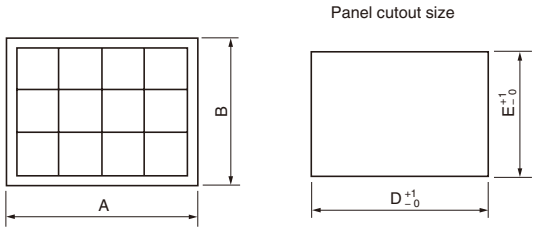

■AP40F Model Outline Dimensions and Panel Cutout Size (Unit: mm)

●Outline dimension A (width), B (depth), and panel cutout size D (width), E (depth)

(Both the width and depth dimensions are for the S type. For the T and V types, convert one panel into two panels. For the H type, convert two panels into one panel.)

Number of column (vert.) or row (horiz.)	1	2	3	4	5	6	7	8	9	10	11	12	13	14	15
Outside dimension A or B	56	96	136	176	216	256	296	336	376	416	456	496	536	576	616
Panel cutout size D, panel cutout size E	45	85	125	165	205	245	285	325	365	405	445	485	525	565	605

(Note) For the maximum number of panels that can be manufactured, refer to page C1-245.

●Outline drawing

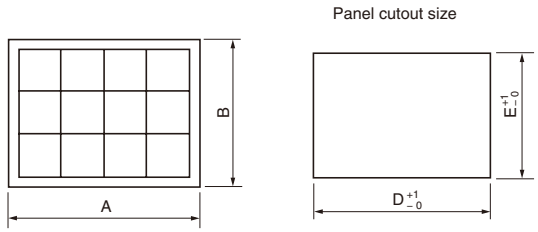

■Outline drawing(Unit: mm)

●AP30F type

Shape	External dimensions
Illuminating part	S type / T, T2 type / V, V2 type / H type
Rear surface and side surface	Full voltage LED (R partial voltage, CR partial voltage) / With transformer (incandescent and LED 230 - 480 V), resistor unit type / Full voltage LED (depth reduction type) / External optical shield specification product examples / Full voltage (incandescent) / With transformer (incandescent, 100 - 220 V)
All surfaces two colors/rear surface and side surface with check terminal Half size	Full voltage

S type

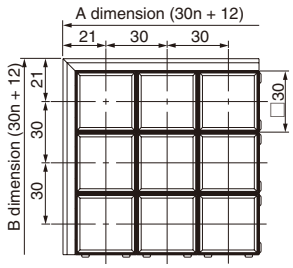

T, T2 type

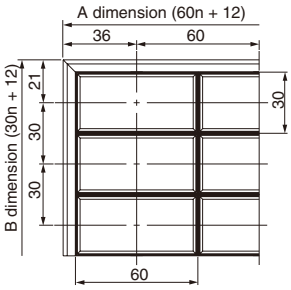

V, V2 type

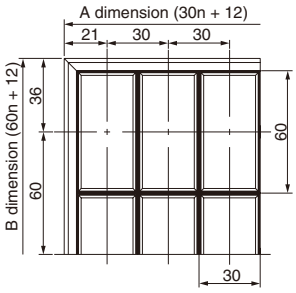

H type

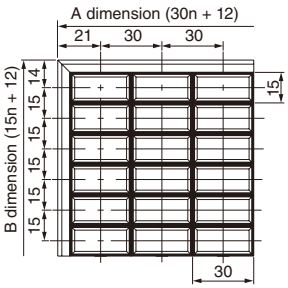

Full voltage LED (R partial voltage, CR partial voltage)

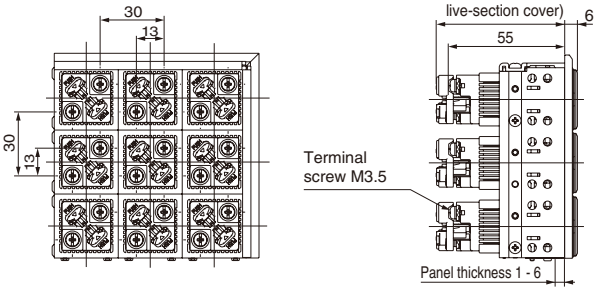

With transformer (incandescent and LED 230 - 480 V), resistor unit type

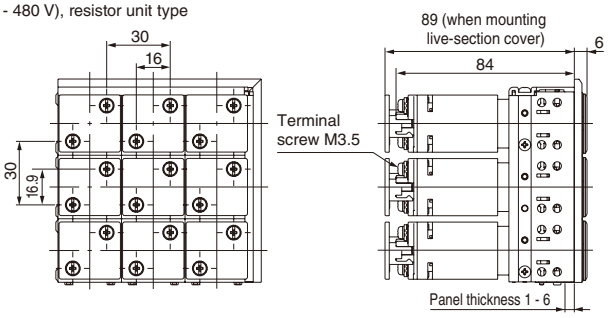

Full voltage LED (depth reduction type)

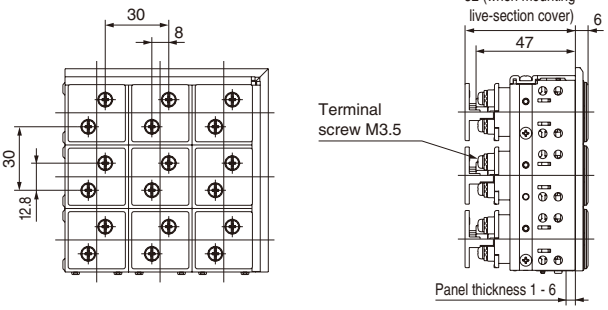

External optical shield specification product examples

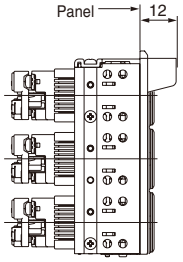

Full voltage (incandescent)

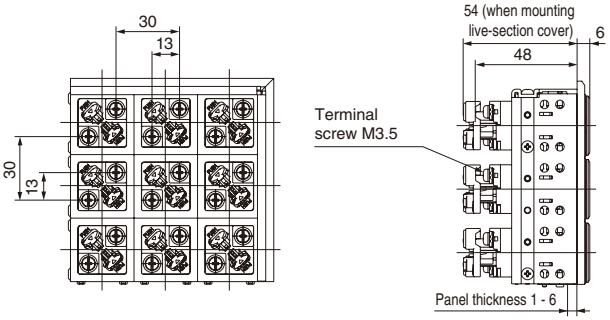

Rear surface Side surface

With transformer (incandescent, 100 - 220 V)

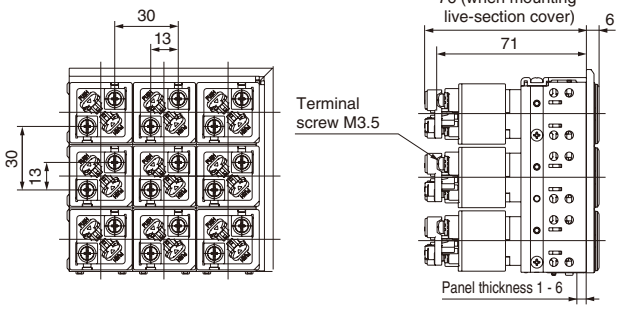

Rear surface Side surface

Full voltage

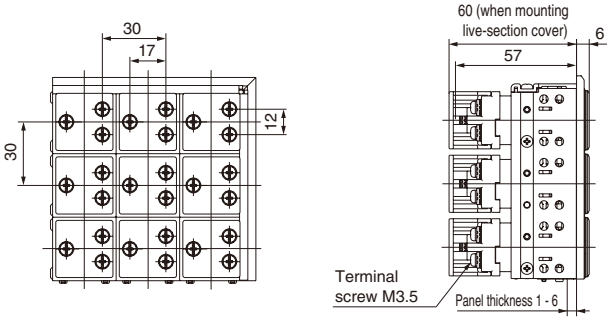

Rear surface Side surface

Multi Display Lights AP30F and AP40F

●AP40F type

Shape	External dimensions
Illuminating part	S type / T, T2 type / V, V2 type / H type
Rear surface and side surface	Full voltage LED (R partial voltage, CR partial voltage) / With transformer, resistor unit type / Full voltage LED (depth reduction type) / Full voltage (incandescent)
All surfaces two colors/rear surface and side surface with check terminal Half-size	Full voltage

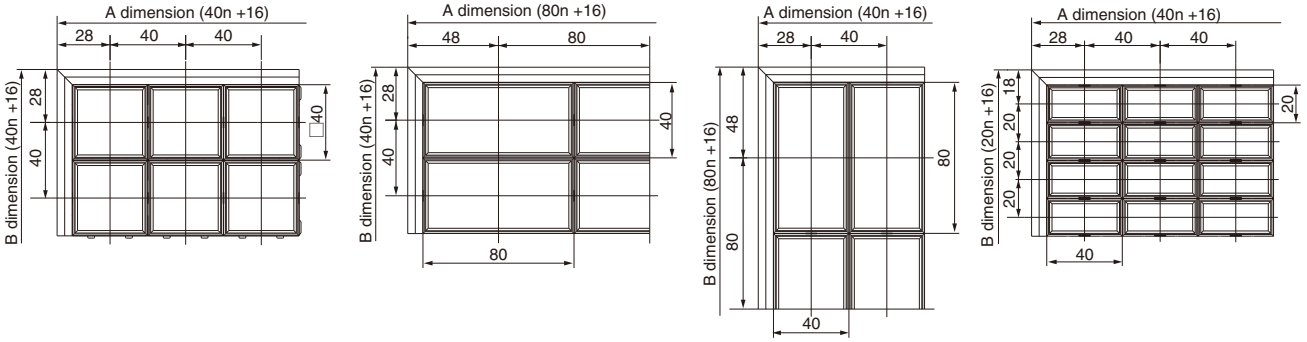

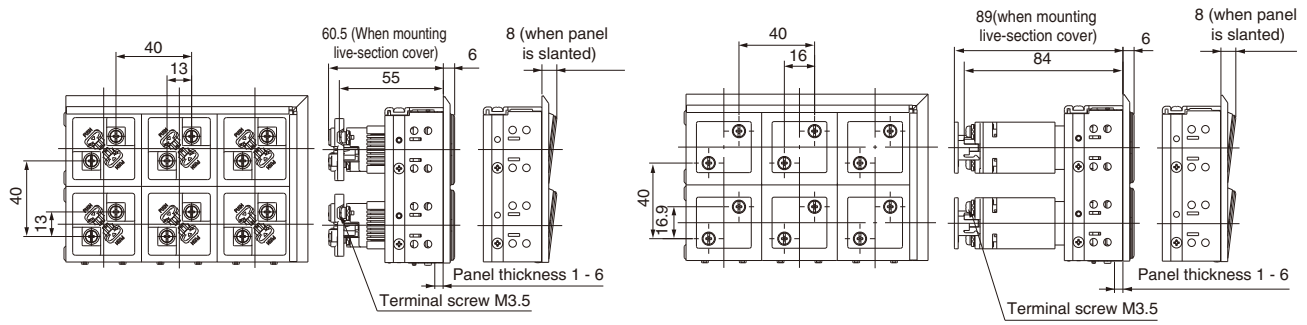

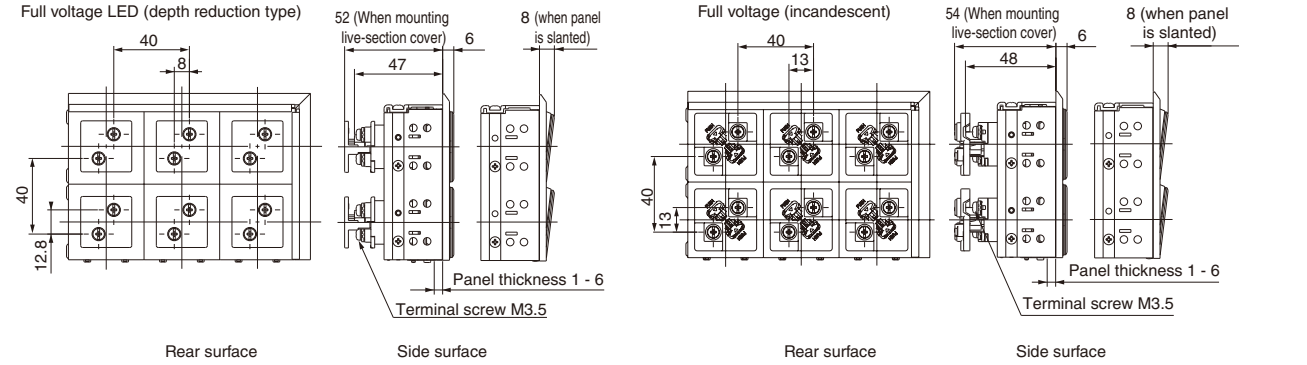

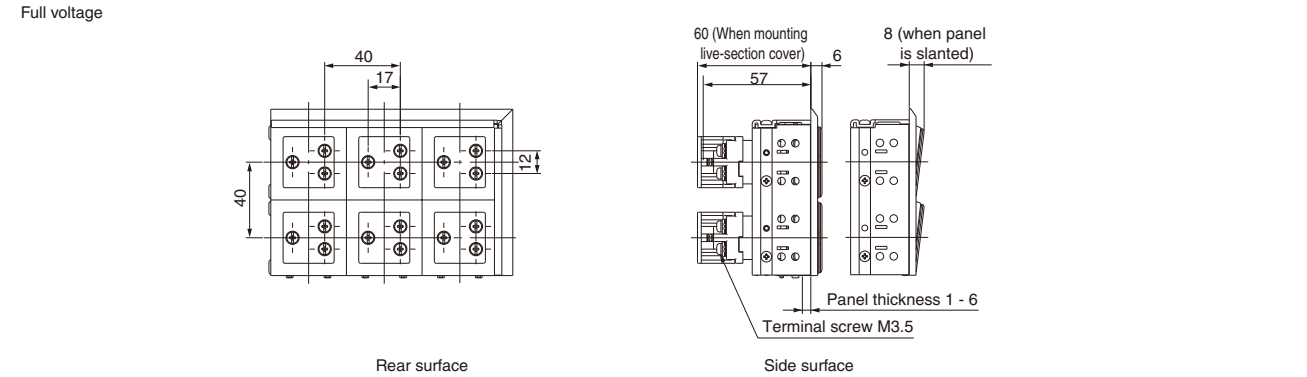

Fuji Electric FA Components & Systems Co., Ltd.
Information subject to change without notice

■ ⚠ Notes for Use

(1) Mounting

● Mounting hole

Cut the panel cutout after taking the number of columns and rows into consideration.

(Refer to outline drawing)

● Mounting panel

① Mounting panel thickness: 1 - 6 mm

② Choose the mounting panel thickness after taking the product mass and the wire mass when wiring into account.
In particular, products with transformers that have many panels become heavy, so be careful when choosing the panel thickness.

(2) Mounting to the Panel

●Mounting procedure

① Line up with the mounting holes and insert the main unit from the panel surface. Be sure not to confuse the top of the main unit when doing this. The main unit nameplate is installed to the top side. However, for integrated resin frame one-panel models (main unit symbol: 0101) and vertical specification models (main unit symbol: 0201, 0301, 0302), insert such that the main unit nameplate installation side is on the left surface when viewed from the illumination surface.

② Insert the metal mounting fittings from the rear panel surface toward the side plate grooves, as shown in the diagram, then tighten the screws. Tighten them with a torque of 0.4 - 0.6 N/m.

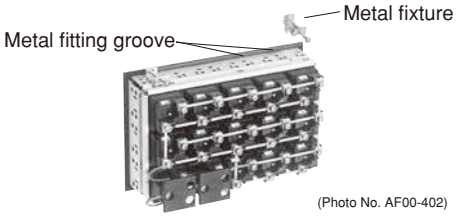

(Photo No. AF00-402)

③ For integral molding frame products, tightening too much can cause deformation and such, so be careful. Tighten with a torque of about 0.4 N/m.

● Mounting fitting insertion example (the ■ mark is the mounting fitting)

① Lights 1 - 20 for full voltage and type with transformer

Row (Horiz.) / Column (Vert.)	AP30F	01 - 02	03 - 08	09 - 15	16 - 20
	AP40F	01 - 02	03 - 06	07 - 11	12 - 15
AP30F	AP40F				
01 - 02	01 - 02				
03 - 06	03 - 04				
07 - 10	05 - 07				
11 - 15	–				
16 - 20	–				

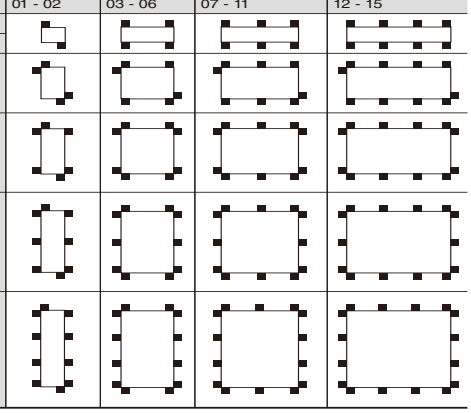

② Integral molding frame products (AP30F)

Row (Horiz.) / Column (Vert.)	01 - 03
01 - 02	

③ Lights 21 - 50 for type with transformer

If the type with transformer exceeds 20 lights, the product mass will become heavy and require an increase in the number of panel mounting fittings. Mount the required number for each column and row in a uniform manner. The table below shows the quantity required for each side.

Column (vert.) or row (horiz.)	1 - 2	3 - 4	5	6 - 8	9	10 - 12	13	14 - 16	17	18 - 20
Quantity required for each side	1	2	3	4	5	6	7	8	9	10

④ Lights 51 - 80 for type with transformer

Install mounting fittings to all locations.

(3) Wiring

● The terminal screw is an M3.5 plus/minus screw.
Use a crimp contact when wiring.

● It is possible to stack two crimp contacts on top of each other when mounting. The terminal washer is a self-lifting type.

● Tighten the terminal screw with a tightening torque of 0.8 - 1.0N/m.

● The terminal section has staggered wiring, which facilitates jumper connections and other such work.
In addition, various types of short-circuit plates (2 - 6 poles) are available as well.

● Make it so that external force (tensile force) does not act during wiring work and after wiring. This may cause the lighting to malfunction.

● During wiring work, be sure to use the included terminal screw.

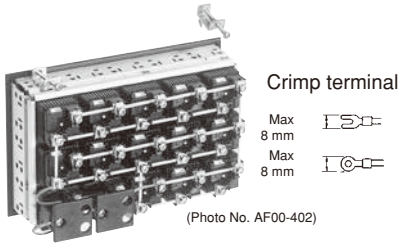

(Photo No. AF00-402)

*Short-circuit plate rated thermal current: 3A

(4) Illuminating Part Disassembly

Bringing the tip of the minus driver into contact with the removal grooves on both ends of the lens case and pushing in the direction of the arrow will cause the illuminating part to come loose.

Use a minus driver with a tip width of 4.5 mm or less and a thickness of 0.6 mm or less.

Bringing the tip of the minus driver into contact with the concave removal grooves on both ends of the lens case and pushing in the direction of the arrow will cause the LED unit for the lens case to come loose.

When mounting the LED unit, line up the ▼ mark engraved on the LED unit with the top side (terminal No. facing upward) of the main unit and press them together. Be aware that the mounting process requires that the pieces be orientated a certain way. In addition, be sure to mount the lens case and lens, and press the lens section down with your finger until it stops moving. Do not press the LED chip surface directly with your finger. Static electricity may cause the lighting to malfunction.

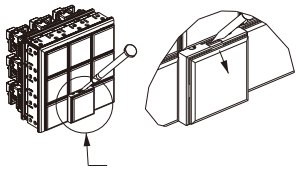

(Note) For the AP40F S-type and T-type models, the removal grooves are on the sides.

(5) Replacing the Color Plate and Legend Plate

As shown in the diagram, twist the driver to remove the lens and then remove the color plate and legend plate.

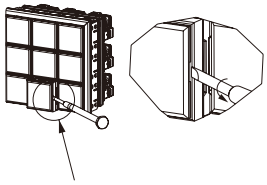

In addition, there is a special suction removal tool (DN7Y020) for removing the color plate and legend plate, so attach the suction removal tool and perform replacement as shown in the diagram.

(Photo No. AF00-401)

For LED units, removing the color plate exposes the LED chip, so be sure not to touch it. Static electricity may cause the lighting to malfunction.

When mounting, make sure the crimped surface of the color plate and legend plate are facing the light generation section before incorporating them.

Multi Display Lights AP30F and AP40F

(6) Merging the Color Plate and Legend Plate

How to insert legend plate/color plate

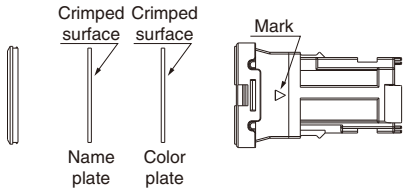

- With the light OFF, for the color display, insert the color plate and then the legend plate (opal) into the lens case.
- With the light OFF, in the case of an opal display, insert the color plate (transparent) and then the legend plate (opal) into the lens case. (LED specification only)
- For a smoked lens display, insert the color plate and then the legend plate (opal) into the lens case.
- It is possible to engrave the legend plate and color plate.
- For LED units, removing the color plate exposes the LED chip, so be sure not to touch it. Static electricity may cause the lighting to malfunction.

For lights-off color display

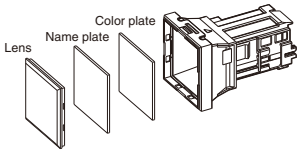

For lights-off opal display

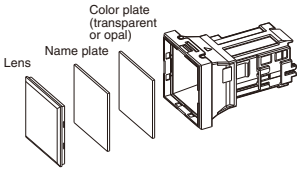

(7) Smoked Lens Specification

The engraved characters and symbols will only be displayed when the light is ON.

The legend plate crimped surface has a black coating, so engrave the coated surface.

When engraving, the coated surface will be inserted toward the lamp (LED) side, so engrave the characters/symbols in reverse.

When the light is ON, only the part removed from the black coating via engraving will be displayed on the smoked lens.

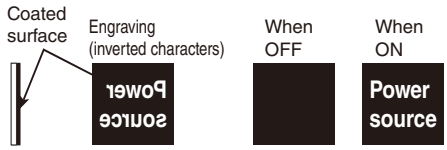

(8) Lens and Lens Case Mounting

Mount the lens protruding part and the lens case groove such that they match.

(9)Slanted panel (except vertical rectangle V-type and half size)

The AP40F model comes equipped as standard with slanted panels for which the angle can be changed. Attaching the lens case rotated 180° switches panels between slanted and flat.

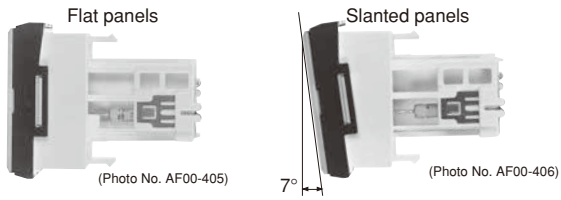

(Photo No. AF00-405) (Photo No. AF00-406)

Disengaging the lens case and holder exposes the LED chip, so be sure not to touch it. Static electricity may cause the lighting to malfunction.

(10) External Optical Shield Specification Product

The AP30F model is effective at improving invisibility in external light.

- Order using the specification sheet on Page 25.
- Can be manufactured in S and T types.
- Follow the diagram below if replacing the delivery platform or external optical shield specification product.

LED unit for AP30F (square/rectangle)

Lens case (standard→external optical shield) replacement process

《Replacement process》

The process will be shown using the square type (AP30F product category).

① Remove the lens case (standard) from the LED unit.

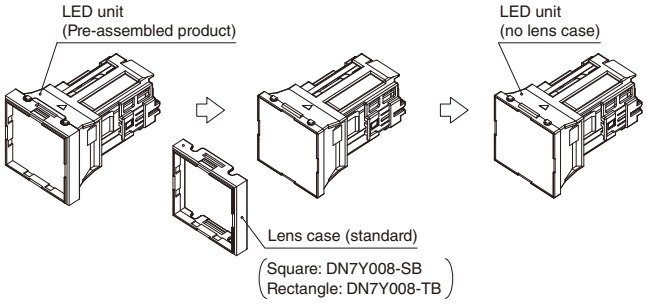

② Mount the lens case (with external optical shield) to the LED unit.

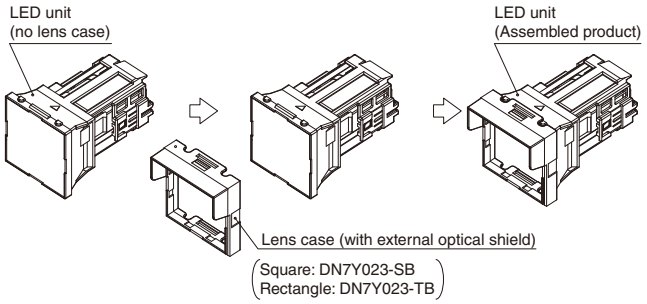

(Note 1) A removed lens case (standard) can be reused for an incandescent lamp.
(Note 2) Changing is possible with the following LED units.
DN7Q001-S.-T product category (full voltage LED/R partial voltage/CR partial voltage)
DN7Q002-S.-T product category (two-color illumination)
DN7Q003-S.-T product category (with transformer/depth reduction type)
DN7Q004-S.-T product category (check terminal)

(11) Changing an Incandescent Lamp

Use the concave end of the lamp changer (AHX029) to mount or remove the lamp.

(12) LED Unit Voltage/Color Display

Symbols indicating the lamp operational voltage and the luminous color are stamped on the LED unit.

(Photo No. AF00-404)

Symbol	Lamp operational voltage	Seal color
6	6 VDC	Black
12	12 V AC/DC	Black
15	15 V AC/DC	Black
24	24 V AC/DC	Red
48	48 V AC/DC	Black
110	100 - 110 V AC/DC	Green
127	115 - 127 V AC/DC	Black
220	200 - 220 V AC	Purple

Symbol	Color
R	Red
A	Orange
W	Opal
Y	Yellow
G	Green
S	Blue
P	Pure
	White

(13) LED Polarity

Please note that full-voltage type 6 V DC products possess polarity in the terminal section. + side is on X1 terminal side.

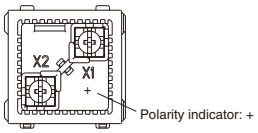

(14) Two-color Illumination/Half Size Connection

Terminal No.	Two-color illumination lamp color	Half size lamp panel
Between X1 and X3	Green	Upper side
Between X1 and X2	Red	Lower side

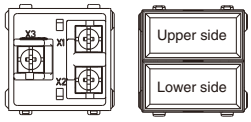

(15) Check Terminal Included (only 24 V AC/DC can be manufactured)

This three-terminal object is installed separately as a lamp check terminal, and can be used for simple lamp checking during maintenance and inspection.

・A check terminal wiring example is shown below.

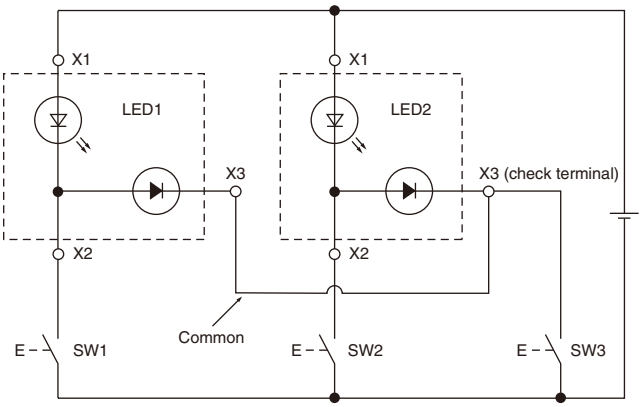

SW3: LED lighting check switch

(16) Other Notes

● With transformer

① When there is atransformer, square-type replacement allows for a maximum of 80 panels during manufacture.

② The transformer capacitance is designed separately for the LED unit or incandescent lamp to which it is attached.
Other loads cannot be connected.

● Rated operational voltage

The incandescent lamp rated voltages are as shown below, but use the rated operational voltage in consideration of the lamp's life expectancy and heat generation.

Lamp rated voltage	Rated operational voltage
6.3 V	5.5 V
18 V	15.5 V
24 V	20 V
30 V	24 V

● Continuous lighting

① During continuous lighting, use a lighting rate of 50% or less with staggered lighting.
Note that with continuous lighting for LEDs, the life expectancy may be affected when the lighting rate or degree of concentration is high.

② For full two-color illumination, do not use both colors for continuous lighting at the same time.

● LED lamp mis-lighting

LED lamps provide lighting with a very low current (approx. 0.01 mA), so mis-lighting may occur due to leakage current from an absorption circuit or non-contact circuit, stray capacitance between cables, noise, and so on. Using the following example conditions as a guide, connect shunt resistors, CR elements, and so on between the terminals of the LED indication lamp to prevent mis-lighting. However, the resistor or CR element selected differs depends on the model and usage conditions.

Example 1

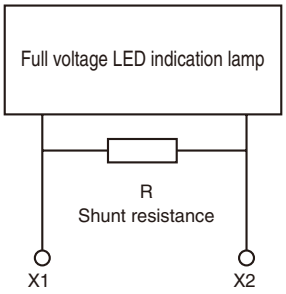

・For 24 V DC
R: 10k Ω (0.5 W)
・For 24 V AC
R: 2k Ω (2 W)

Example 2

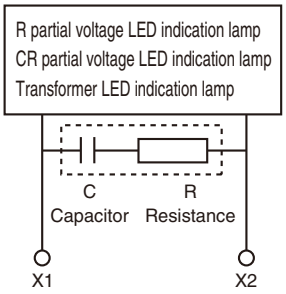

・For 110 V AC
C: 0.33 μF (250 Vac)
R: 120 Ω (0.25 W)
・For 220 V AC
C: 0.1 μF (250 Vac)
R: 120 Ω (0.25 W)

●Storage and usage locations

① Store and use within the operational ambient temperature and humidity ranges for the rating display.

② Do not use the product outdoors.

③ Noise countermeasures
When using in noisy environments, connect a surge suppressor or other such elements between terminals as shown in the diagram below.

Connection example

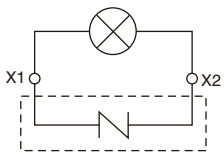

Surge suppressor

④ Do not use in places where dust or chips accumulate.
If they get inside the product, it may not be able to light properly.

⑤ Do not use in areas affected by ozone or corrosive gas. This may cause the lighting to fail and so on.

Multi Display Lights AP30F and AP40F

■Part List

Name/Appearance	Type/Outline drawing (mm)

Lens

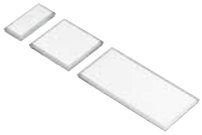

(Photo No. AF00-379)

Applicable models		Type		
		Square (S)	Rectangle (T, V)	Half size (H)
AP30F	Clear lens	**DN7C001-SC**	**DN7C001-TC**	**DN7C001-HC**
	Smoked lens	**DN7C001-SS**	**DN7C001-TS**	**DN7C001-HS**
AP40F	Clear lens	**DN8C001-SC**	**DN8C001-TC**	**DN8C001-HC**
	Smoked lens	**DN8C001-SS**	**DN8C001-TS**	**DN8C001-HS**

Application:
Clear lenses have standard transparency.
Smoked lens is colored in smoky color. You can combine it with a lens for smoked lenses to make the characters stand out when illuminated.

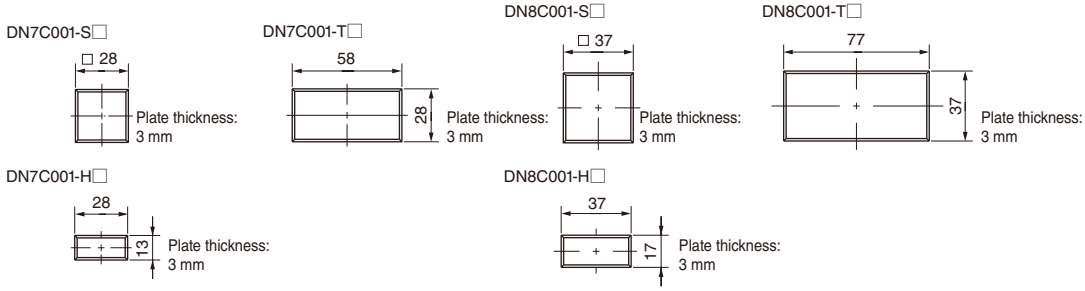

Color plate and legend plate

Color plate Application: Adds color to the display.

Applicable models	Main unit color symbol		Color	Type			
	LED	Incandescent		Square (S)	Rectangle (T, V)	Split rectangle	Half size (H)
AP30F	R	R	Red	**APCX016-SR**	**APCX016-TR**	**APCX058-R**	**DN7P002-R**
	O	O	Orange	**APCX016-SO**	**APCX016-TO**	**APCX058-O**	**DN7P002-A**
	P	W	Opal	**APCX012-LW**	**APCX014-LW**	**APCX058-W**	**DN7P002-W**
	G	–	Green (LED)	**APCX016-SLG**	**APCX016-TLG**	**APCX058-LG**	**DN7P002-G**
	–	G	Green (Incandescent)	**DN7P004-G**	**DN7P005-G**	**DN7P006-G**	–
	Y	Y	Yellow	**APCX016-SLY**	**APCX016-TLY**	**APCX058-LY**	**DN7P002-Y**
	S	S	Blue	**APCX016-SS**	**APCX016-TS**	**APCX058-S**	**DN7P002-S**
	W, RG, C□	–	Transparent	**APCX012-C**	**APCX014-C**	**APCX058-C**	–
	W, C□	–	Transparent	–	–	–	**DN7P002-C**
AP40F	R	R	Red	**DN8P004-R**	**DN8P005-R**	**DN8P006-R**	**DN8P002-R**
	O	O	Orange	**DN8P004-A**	**DN8P005-A**	**DN8P006-A**	**DN8P002-A**
	W, RG, C□	W	Opal	**APCX013-LW**	**APCX015-LW**	**APCX059-W**	**DN8P002-W**
	G	–	Green (LED)	**APCX077-SG**	**APCX077-TG**	**APCX079-G**	**DN8P002-G**
	–	G	Green (Incandescent)	**DN8P004-G**	**DN8P005-G**	**DN8P006-G**	–
	Y	Y	Yellow	**DN8P004-Y**	**DN8P005-Y**	**DN8P006-Y**	**DN8P002-Y**
	S	S	Blue	**APCX017-SS**	**APCX017-TS**	**APCX059-S**	**DN8P002-S**
	P	–	Pure white	**APCX077-SW**	**APCX077-TW**	**APCX079-W**	–
	P	–	Opal	–	–	–	**DN8P002-W**
	W, C□	–	Transparent	–	–	–	**DN8P002-C**

Legend plate

Applicable models		Type		
		Square (S)	Rectangle (T, V)	Half size (H)
AP30F	For clear lens	**APCX012-LW**	**APCX014-LW**	**DN7P002-W**
	For smoked lens	**APCX012-LWS**	**APCX014-LWS**	**DN7P002-WS**
AP40F	For clear lens	**APCX013-LW**	**APCX015-LW**	**DN8P002-W**
	For smoked lens	**APCX013-LWS**	**APCX015-LWS**	**DN8P002-WS**

Application:
For clear lenses, uses opal color to show the legend display via engraving.
For smoked lenses, one side of the opal legend plate (crimped surface) has a black coating. By engraving on the black coating, when the light is ON, only the part removed from the black coating via engraving will be displayed on the smoked lens.

* Legend panel is compatible with older models (AP30C, AP40C).

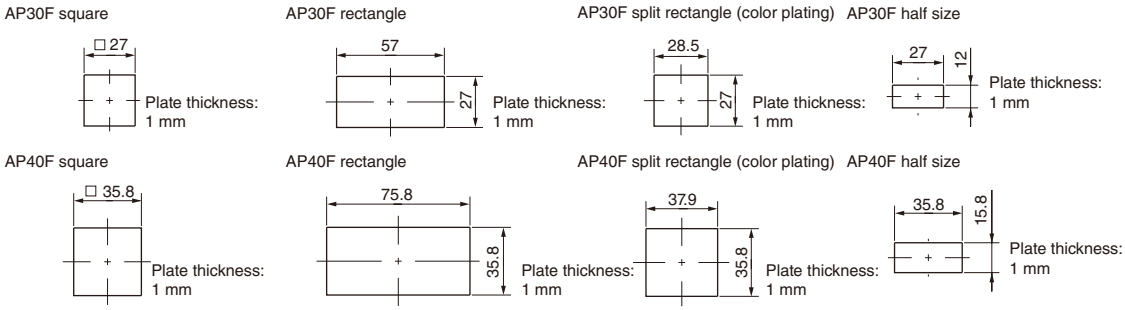

(Photo No. AF00-378)

Fuji Electric FA Components & Systems Co., Ltd.
Information subject to change without notice

Name/Appearance	Type/Outline drawing (mm)

Short-circuit plate

Applicable models	Type					Remarks
	2 poles	3 poles	4 poles	5 poles	6 poles	
AP30F	**APCX029**	**DN7Y001-03**	**DN7Y001-04**	**DN7Y001-05**	**DN7Y001-06**	Standard (no insulation cover)
AP40F	**APCX030**	**DN8Y001-03**	**DN8Y001-04**	**DN8Y001-05**	**DN8Y001-06**	
AP30F	**APCX029-B**	**DN7Y001-03B**	**DN7Y001-04B**	**DN7Y001-05B**	**DN7Y001-06B**	With insulation cover
AP40F	**APCX030-B**	**DN8Y001-03B**	**DN8Y001-04B**	**DN8Y001-05B**	**DN8Y001-06B**	

(Photo No. AF00-382)

Short-circuit plate measurement table

Applicable models	A measurement	B measurement				
		2 poles	3 poles	4 poles	5 poles	6 poles
AP30F product category	30	37.6	67.6	97.6	127.6	157.6
AP40F product category	40	47.6	87.6	127.6	167.6	207.6

Application: Fittings for performing jumper connections between unit terminals.

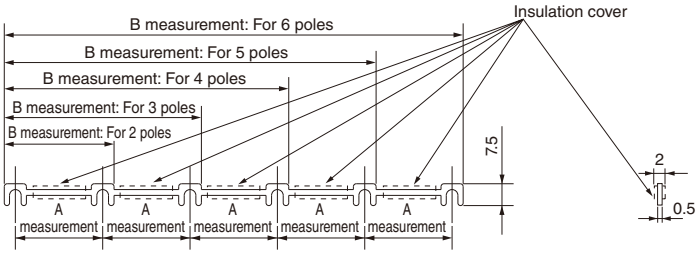

Incandescent lamp

Applicable models	Metal shape	Voltage/calibre	Type	Remarks
AP30F	Insert type BA9S/13	6.3V 1W	**AHX135**	Bulb with built-in transformer
		18V 1W	**AHX279**	
		24V 1W	**AHX144**	
		30V 1W	**AHX129**	
		48V 1W	**AHX407**	Bulb with built-in resistor unit type
AP40F		18V 2W	**AHX141**	Bulb with built-in transformer
		24V 2W	**AHX142**	
		30V 2W	**AHX143**	
		48V 2W	**DN7H001**	Bulb with built-in resistor unit type

* Incandescent lamp is compatible with older models (AP30C, AP40C).

(Photo No. AF00-383)

For AP30F (except 48 V 1 W)

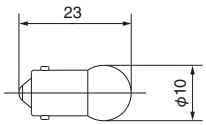

For AP40F, AP30F (48 V 1 W)

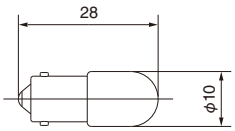

Lamp changer

(Photo No. T-1990)

Applicable models	Type
AP30F, AP40F For incandescent lamps	**AHX029**

Application: A rubber-made spanner for installing and removing bulbs. Insert the ϕ9 section into the incandescent lamp and use.

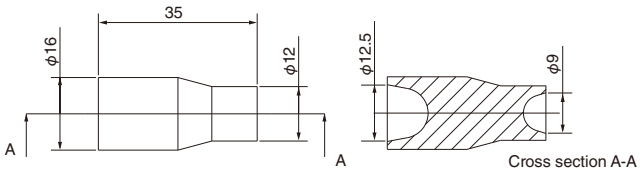

Color plate/legend plate removal tool

Type	**DN7Y020**

Application:
Used when removing the legend plate or color plate from the incandescent lamp reflector or the LED unit holder.
The ϕ11 suction cup is used for half-size products.

(Photo No. AF00-380)

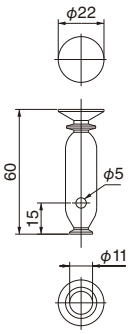

Multi Display Lights AP30F and AP40F

Name/Appearance	Type/Outline drawing (mm)

LED unit (high brightness LED illuminated model, "PIKARI-KUN")
(Full voltage LED/R partial voltage/CR partial voltage)

(Photo No. AF00-374)

(Photo No. AF00-373)

Applicable models	Luminous color	Color plate specifications	Type				Remarks
			Square (S)	Horizontal rectangle (**T**)	Vertical rectangle (**V**)	Half size (H)	
AP30F Full voltage R partial voltage CR partial voltage	Red	Color plate method (for lights-off color display)	**DN7Q001-S1□R**	**DN7Q001-T1□R**	**DN7Q001-V1□R**	**DN7Q001-H1□R**	Full monochrome illumination
	Orange		**DN7Q001-S1□A**	**DN7Q001-T1□A**	**DN7Q001-V1□A**	**DN7Q001-H1□A**	
	Opal		**DN7Q001-S1□W**	**DN7Q001-T1□W**	**DN7Q001-V1□W**	**DN7Q001-H1□W**	
	Green		**DN7Q001-S1□G**	**DN7Q001-T1□G**	**DN7Q001-V1□G**	**DN7Q001-H1□G**	
	Yellow		**DN7Q001-S1□Y**	**DN7Q001-T1□Y**	**DN7Q001-V1□Y**	**DN7Q001-H1□Y**	
	Blue		**DN7Q001-S1□S**	**DN7Q001-T1□S**	**DN7Q001-V1□S**	**DN7Q001-H1□S**	
	Pure White		**DN7Q001-S1□P**	**DN7Q001-T1□P**	**DN7Q001-V1□P**	**DN7Q001-H1□P**	
	A B ❶		–	**DN7Q001-T2□A B**	**DN7Q001-V2□A B**	–	Split illumination
	Red	Color plate (transparent) method (for lights-off opal display)	**DN7Q001-S3□R**	**DN7Q001-T3□R**	**DN7Q001-V3□R**	**DN7Q001-H3□R**	Full monochrome illumination
	Orange		**DN7Q001-S3□A**	**DN7Q001-T3□A**	**DN7Q001-V3□A**	**DN7Q001-H3□A**	
	Green		**DN7Q001-S3□G**	**DN7Q001-T3□G**	**DN7Q001-V3□G**	**DN7Q001-H3□G**	
	Yellow		**DN7Q001-S3□Y**	**DN7Q001-T3□Y**	**DN7Q001-V3□Y**	**DN7Q001-H3□Y**	
	Blue		**DN7Q001-S3□S**	**DN7Q001-T3□S**	**DN7Q001-V3□S**	**DN7Q001-H3□S**	
	A B ❶		–	**DN7Q001-T4□A B**	**DN7Q001-V4□A B**	–	Split illumination
AP40F Full voltage R partial voltage CR partial voltage	Red	Color plate method (for lights-off color display)	**DN8Q001-S1□R**	**DN8Q001-T1□R**	**DN8Q001-V1□R**	**DN8Q001-H1□R**	Full monochrome illumination
	Orange		**DN8Q001-S1□A**	**DN8Q001-T1□A**	**DN8Q001-V1□A**	**DN8Q001-H1□A**	
	Opal		**DN8Q001-S1□W**	**DN8Q001-T1□W**	**DN8Q001-V1□W**	**DN8Q001-H1□W**	
	Green		**DN8Q001-S1□G**	**DN8Q001-T1□G**	**DN8Q001-V1□G**	**DN8Q001-H1□G**	
	Yellow		**DN8Q001-S1□Y**	**DN8Q001-T1□Y**	**DN8Q001-V1□Y**	**DN8Q001-H1□Y**	
	Blue		**DN8Q001-S1□S**	**DN8Q001-T1□S**	**DN8Q001-V1□S**	**DN8Q001-H1□S**	
	Pure White		**DN8Q001-S1□P**	**DN8Q001-T1□P**	**DN8Q001-V1□P**	**DN8Q001-H1□P**	
	A B (split illumination) ❶		–	**DN8Q001-T2□A B**	**DN8Q001-V2□A B**	–	Split illumination
	Red	Color plate (opal) method (for lights-off opal display)	**DN8Q001-S3□R**	**DN8Q001-T3□R**	**DN8Q001-V3□R**	**DN8Q001-H3□R**	Full monochrome illumination
	Orange		**DN8Q001-S3□A**	**DN8Q001-T3□A**	**DN8Q001-V3□A**	**DN8Q001-H3□A**	
	Green		**DN8Q001-S3□G**	**DN8Q001-T3□G**	**DN8Q001-V3□G**	**DN8Q001-H3□G**	
	Yellow		**DN8Q001-S3□Y**	**DN8Q001-T3□Y**	**DN8Q001-V3□Y**	**DN8Q001-H3□Y**	
	Blue		**DN8Q001-S3□S**	**DN8Q001-T3□S**	**DN8Q001-V3□S**	**DN8Q001-H3□S**	
	A B (split illumination) ❶		–	**DN8Q001-T4□A B**	**DN8Q001-V4□A B**	–	Split illumination

(Note 1) LED units are equipped with a lens case and a color plate.
(Note 2) Assign the below voltage symbols inside □.

Voltage	Symbol	Square, horizontal, vertical rectangle	Half size
6V DC	6	○	–
12V AC/DC	B	○	○
15V AC/DC	C	○	○
24V AC/DC	E	○	○
48V AC/DC	F	○	–
110V AC/DC	H	○	–
127V AC/DC	L	○	–
220V AC	M	○	–

❶ Split Light Color Assignment Method

・Split horizontal rectangle

・Split vertical rectangle

Assign color symbol to A, B
Red: R, Green: G, Orange: A, Opal: W, Yellow: Y, Blue: S, Pure White: P
Type assignment example
When left side A for AP30F split horizontal rectangular light is red and right side B is green
DN7Q001-T2ERG

DN7Q001-S (AP30F square) | DN7Q001-T, V (AP30F horizontal rectangle, vertical rectangle) | DN7Q001-H AP30F (Half size)

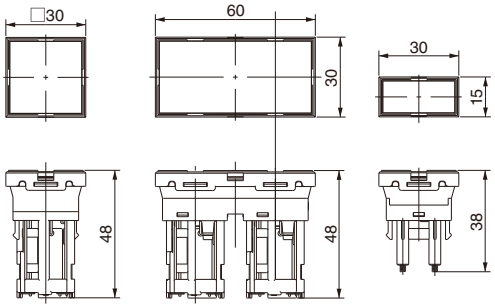

DN8Q001-S (AP40F square) | DN8Q001-T, V (AP40F horizontal rectangle, vertical rectangle) | DN8Q001-H AP40F (Half size)

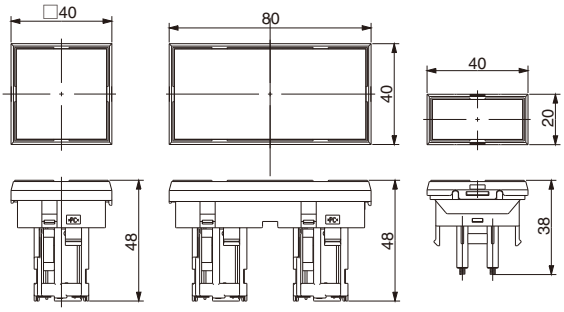

Fuji Electric FA Components & Systems Co., Ltd.
Information subject to change without notice

Name/Appearance	Type/Outline drawing (mm)

LED unit (high brightness LED illuminated model, "PIKARI-KUN") (With transformer/full voltage depth reduction type)

(Photo No. AF00-376)

(Photo No. AF00-375)

Applicable models	Luminous color	Color plate specifications	Type			Remarks
			Square (S)	Horizontal rectangle (T)	Vertical rectangle (V)	
AP30F Transformer type, full-voltage type For depth reduction type	Red	Color plate method (for lights-off color display)	**DN7Q004-S1ER**	**DN7Q004-T1ER**	**DN7Q004-V1ER**	Full monochrome illumination 24 V only
	Orange		**DN7Q004-S1EA**	**DN7Q004-T1EA**	**DN7Q004-V1EA**	
	Opal		**DN7Q004-S1EW**	**DN7Q004-T1EW**	**DN7Q004-V1EW**	
	Green		**DN7Q004-S1EG**	**DN7Q004-T1EG**	**DN7Q004-V1EG**	
	Yellow		**DN7Q004-S1EY**	**DN7Q004-T1EY**	**DN7Q004-V1EY**	
	Blue		**DN7Q004-S1ES**	**DN7Q004-T1ES**	**DN7Q004-V1ES**	
	Pure White		**DN7Q004-S1EP**	**DN7Q004-T1EP**	**DN7Q004-V1EP**	
	A B ❶		–	**DN7Q004-T2E A B**	**DN7Q004-V2E A B**	Split illumination, 24 V only
	Red	Color plate (transparent) method (for lights-off opal display)	**DN7Q004-S3ER**	**DN7Q004-T3ER**	**DN7Q004-V3ER**	Full monochrome illumination 24 V only
	Orange		**DN7Q004-S3EA**	**DN7Q004-T3EA**	**DN7Q004-V3EA**	
	Green		**DN7Q004-S3EG**	**DN7Q004-T3EG**	**DN7Q004-V3EG**	
	Yellow		**DN7Q004-S3EY**	**DN7Q004-T3EY**	**DN7Q004-V3EY**	
	Blue		**DN7Q004-S3ES**	**DN7Q004-T3ES**	**DN7Q004-V3ES**	
	A B ❶		–	**DN7Q004-T4E A B**	**DN7Q004-V4E A B**	Split illumination, 24 V only
AP40F Transformer type, full-voltage type For depth reduction type	Red	Color plate method (for lights-off color display)	**DN8Q004-S1ER**	**DN8Q004-T1ER**	**DN8Q004-V1ER**	Full monochrome illumination 24 V only
	Orange		**DN8Q004-S1EA**	**DN8Q004-T1EA**	**DN8Q004-V1EA**	
	Opal		**DN8Q004-S1EW**	**DN8Q004-T1EW**	**DN8Q004-V1EW**	
	Green		**DN8Q004-S1EG**	**DN8Q004-T1EG**	**DN8Q004-V1EG**	
	Yellow		**DN8Q004-S1EY**	**DN8Q004-T1EY**	**DN8Q004-V1EY**	
	Blue		**DN8Q004-S1ES**	**DN8Q004-T1ES**	**DN8Q004-V1ES**	
	Pure White		**DN8Q004-S1EP**	**DN8Q004-T1EP**	**DN8Q004-V1EP**	
	A B ❶		–	**DN8Q004-T2E A B**	**DN8Q004-V2E A B**	Split illumination, 24 V only
	Red	Color plate (opal) method (for lights-off opal display)	**DN8Q004-S3ER**	**DN8Q004-T3ER**	**DN8Q004-V3ER**	Full monochrome illumination 24 V only
	Orange		**DN8Q004-S3EA**	**DN8Q004-T3EA**	**DN8Q004-V3EA**	
	Green		**DN8Q004-S3EG**	**DN8Q004-T3EG**	**DN8Q004-V3EG**	
	Yellow		**DN8Q004-S3EY**	**DN8Q004-T3EY**	**DN8Q004-V3EY**	
	Blue		**DN8Q004-S3ES**	**DN8Q004-T3ES**	**DN8Q004-V3ES**	
	A B ❶		–	**DN8Q004-T4E A B**	**DN8Q004-V4E A B**	Split illumination, 24 V only

(Note) LED units are equipped with a lens case and a color plate.

❶ Split Light Color Assignment Method

・Split horizontal rectangle

・Split vertical rectangle

Assign color symbol to A, B

Red: R, Green: G, Orange: A, Opal: W, Yellow: Y, Blue: S, Pure White: P

Type assignment example

When left side A for AP30F split horizontal rectangular light is red and right side B is green

DN7Q004-T2ERG

DN7Q004-S
(AP30F square)

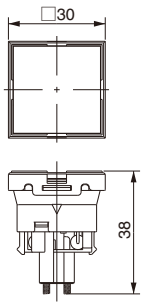

DN7Q004-T, V
(AP30F horizontal rectangle, vertical rectangle)

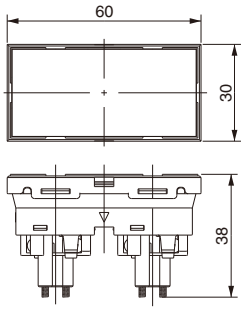

DN8Q004-S
(AP40F square)

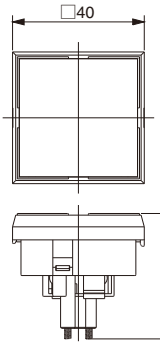

DN8Q004-T, V
(AP40F horizontal rectangle, vertical rectangle)

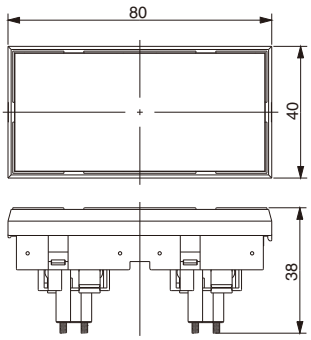

Multi Display Lights
AP30F and AP40F

Name/Appearance	Type/Outline drawing (mm)

LED unit (high brightness LED illuminated model, "PIKARI-KUN") (For check terminal included/full two-color illumination)

(Photo No. AF00-376)

(Photo No. AF00-375)

Applicable models	Luminous color	Color plate specifications	Type			Remarks
			Square (S)	Horizontal rectangle (T)	Vertical rectangle (V)	
AP30F Full monochrome illumination Check terminal included	Red	For color plate method (for lights-off color display)	**DN7Q003-S1ER**	**DN7Q003-T1ER**	**DN7Q003-V1ER**	Full voltage 24 V only
	Orange		**DN7Q003-S1EA**	**DN7Q003-T1EA**	**DN7Q003-V1EA**	
	Opal		**DN7Q003-S1EW**	**DN7Q003-T1EW**	**DN7Q003-V1EW**	
	Green		**DN7Q003-S1EG**	**DN7Q003-T1EG**	**DN7Q003-V1EG**	
	Yellow		**DN7Q003-S1EY**	**DN7Q003-T1EY**	**DN7Q003-V1EY**	
	Blue		**DN7Q003-S1ES**	**DN7Q003-T1ES**	**DN7Q003-V1ES**	
	Pure White		**DN7Q003-S1EP**	**DN7Q003-T1EP**	**DN7Q003-V1EP**	
	Red	Color plate (transparent) method (for lights-off opal display)	**DN7Q003-S3ER**	**DN7Q003-T3ER**	**DN7Q003-V3ER**	
	Orange		**DN7Q003-S3EA**	**DN7Q003-T3EA**	**DN7Q003-V3EA**	
	Green		**DN7Q003-S3EG**	**DN7Q003-T3EG**	**DN7Q003-V3EG**	
	Yellow		**DN7Q003-S3EY**	**DN7Q003-T3EY**	**DN7Q003-V3EY**	
	Blue		**DN7Q003-S3ES**	**DN7Q003-T3ES**	**DN7Q003-V3ES**	
AP30F Full two-color illumination	Red/Green		**DN7Q002-S3EF**	**DN7Q002-T3EF**	**DN7Q002-V3EF**	
AP40F Full monochrome illumination Check terminal included	Red	For color plate method (for lights-off color display)	**DN8Q003-S1ER**	**DN8Q003-T1ER**	**DN8Q003-V1ER**	
	Orange		**DN8Q003-S1EA**	**DN8Q003-T1EA**	**DN8Q003-V1EA**	
	Opal		**DN8Q003-S1EW**	**DN8Q003-T1EW**	**DN8Q003-V1EW**	
	Green		**DN8Q003-S1EG**	**DN8Q003-T1EG**	**DN8Q003-V1EG**	
	Yellow		**DN8Q003-S1EY**	**DN8Q003-T1EY**	**DN8Q003-V1EY**	
	Blue		**DN8Q003-S1ES**	**DN8Q003-T1ES**	**DN8Q003-V1ES**	
	Pure White		**DN8Q003-S1EP**	**DN8Q003-T1EP**	**DN8Q003-V1EP**	
	Red	Color plate (opal) method (for lights-off opal display)	**DN8Q003-S3ER**	**DN8Q003-T3ER**	**DN8Q003-V3ER**	
	Orange		**DN8Q003-S3EA**	**DN8Q003-T3EA**	**DN8Q003-V3EA**	
	Green		**DN8Q003-S3EG**	**DN8Q003-T3EG**	**DN8Q003-V3EG**	
	Yellow		**DN8Q003-S3EY**	**DN8Q003-T3EY**	**DN8Q003-V3EY**	
	Blue		**DN8Q003-S3ES**	**DN8Q003-T3ES**	**DN8Q003-V3ES**	
AP40F Full two-color illumination	Red/Green		**DN8Q002-S3EF**	**DN8Q002-T3EF**	**DN8Q002-V3EF**	

DN7Q002-S
DN7Q003-S
(AP30F square)

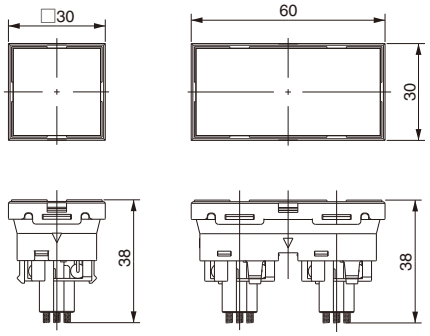

DN7Q002-T, V
DN7Q003-T, V
(AP30F horizontal rectangle, vertical rectangle)

DN8Q002-S
DN8Q003-S
(AP40F square)

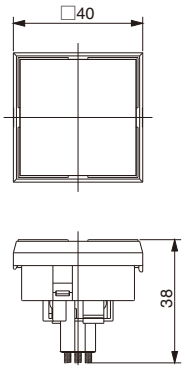

DN8Q002-T, V
DN8Q003-T, V
(AP40F horizontal rectangle, vertical rectangle)

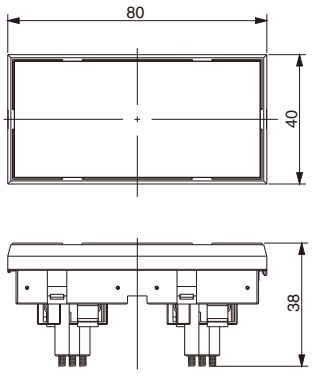

Name/Appearance	Type/Outline drawing (mm)

Metal fixture

(Photo No. AF00-384)

Type	**APX111**

Application: Metal fitting for securing the rear panel face of the multi-panel combination pilot light main unit.

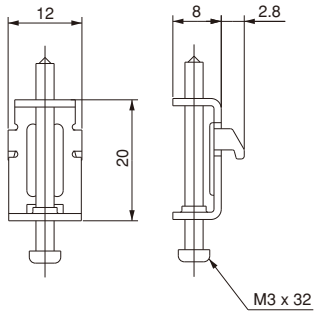

Separate mounting transformer unit

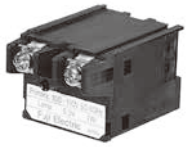

(Photo No. SF-1111)

Application	Type	Secondary voltage specification
AP30F, AP40F types For LED	**AHX544-□**	24 V
For AP30F-type incandescent lamps	**AHX511-□**	5.5 V (6.3 V, 1 W bulb)
For AP40F-type incandescent lamps	**AHX503-□**	15 V (18 V, 2W bulb)

(Note 1) Replace □ with the voltage symbol.
(Note 2) For the main unit application, refer to the "Separate Mounting Transformer Application Table" below.

Voltage	100 - 110 V	115 - 127 V	200 - 220 V	230 - 254 V	350 - 380 V	400 - 440 V	480
Symbol	H	L	M	Q	S	T	V

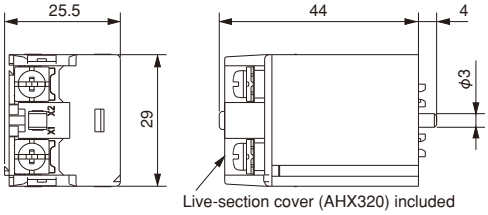

Base unit for transformer separate mounting

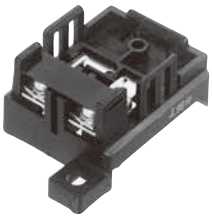

(Photo No. AF89-824)

Type	**AHX326**

Application:
- If there is a restriction on the depth of the rear panel face when the source voltage is AC 100 V or above (excluding LED lamp R partial voltage and CR partial voltage), or when wishing to lower the product mass, it is possible to use the full voltage type and mount and apply the transformer separately (refer to the separate mounting transformer application table).
- Combine with the transformer unit to make it a separately mounted transformer.
- Both rail mounting and screw mounting are possible.

Rail type	A measurement
TH35-15AL	69
TH35-7.5, TH35-7.5AL	61.5

(Note) The secondary side terminal area live section cover (AHX306) are arranged separately.

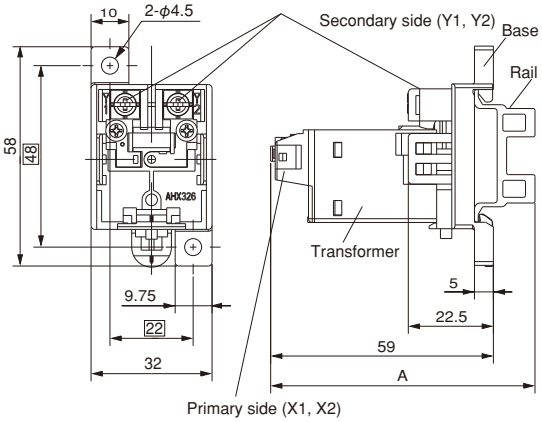

■Separate Mounting Transformer Application Table

	LED specification				Incandescent specifications			
	Main unit type	Built-in unit	Transformer unit	Base for separate mounting	Main unit type	Built-in bulb	Transformer unit	Base for separate mounting
AP30F	AP30F-◇◆E3-● AP30F-◇◆ES-●	DN7Q001-□□E□ DN7Q004-□□E□	AHX544 - □ x number of panels	AHX326 x number of panels	AP30F-◇◆A-●	AHX135 <6.3 V 1 W bulb>	AHX511 - □ x number of panels	AHX326 x number of panels
AP40F	AP40F-◇◆E3-● AP40F-◇◆ES-●	DN8Q001-□□E□ DN8Q004-□□E□			AP40F-◇◆C-●	AHX141 <18 V 2 W bulb>	AHX503 - □ x number of panels	

(Note 1) The basic number of panels replaces ◇◆. 《◇:◆ = vertical x horizontal》
(Note 2) The illuminating part shape symbol replaces ● (S/T/V, excluding H).
(Note 3) Depth length, AP30F-◇◆E3: 60.5 AP30F-◇◆ES: 52 AP30F-◇◆A: 54
AP40F-◇◆E3: 60.5 AP40F-◇◆ES: 52 AP40F-◇◆C: 54
(Note 4) For the LED specification internal unit type, refer to Pages C1-254 to C1-256.

Multi Display Lights
AP30F and AP40F

Name/Appearance	Type/Outline drawing (mm)

Live-section cover

DN7Y002
(Photo No. AF00-389)

DN8Y002
(Photo No. AF00-388)

APCX055
(Photo No. AF00-387)

APCX054
(Photo No. AF00-386)

APX131
(Photo No. AF00-385)

Product category name	Classification		DN7Y002	DN8Y002	APCX055	APCX054	APX131
					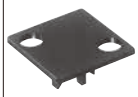		
AP30F	LED Monochromatic illumination	Full voltage R, CR partial voltage	○				
	LED Monochromatic illumination	With transformer			○		
	Half size Two-color illumination	Full voltage					○
	LED Depth reduction type	Full voltage				○	
	Incandescent lamp	Full voltage	○				
	Incandescent lamp	With transformer 110 V, 220 V	○				
	Incandescent lamp	With transformer 230 V or more			○		
AP40F	LED Monochromatic illumination	Full voltage R, CR partial voltage		○			
	LED Monochromatic illumination	With transformer			○		
	Half size Two-color illumination	Full voltage					○
	LED Depth reduction type	Full voltage				○	
	Incandescent lamp	Full voltage		○			
	Incandescent lamp	With transformer			○		

DN7Y002

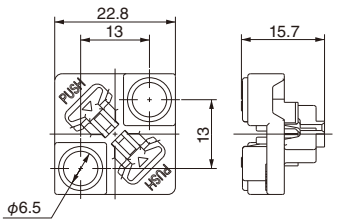

DN8Y002

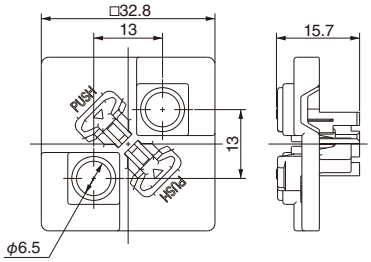

APCX055

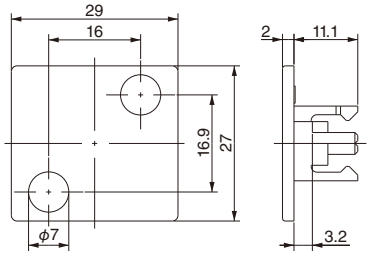

APCX054

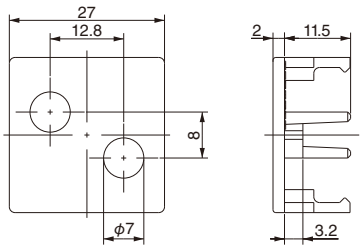

APX131

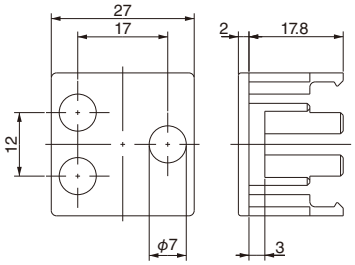

Live-section cover

Type	Product code
AHX306	AH9Y306

Application: Protective cover for secondary side terminal of base unit for transformer separate mounting.

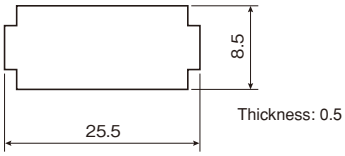

■AP30F/AP40F Product Category Specification Sheet Order Method

● Use the Specification Sheet to Order Items

- Mixed voltage
  Spare window (spare)
  With external light shielding (shield) (AP30F only)
- Rectangular two-section lamp
  Horizontal window
  Vertical window
- Half size
- Others (special specifications)

● How to Fill in Specification Sheet

Specify the shape for the illuminating part in the area enclosed by solid lines. Specify the color, voltage, spare parts, shielding, etc. on the window frame. Refer to the sample below when filling in the sheet.

● Concerning Specification Sheet Attachments when Ordering

Attachments are required for the following shapes.

Specification Sheet	Method		Light	Illuminating surface shape	Lamp type	Type	Sample
Sheet No.1	Mixed (Single-color full-face illumination)	Full voltage R partial voltage CR partial voltage With transformer	LED lamp Incandescent lamp	S T V X	–	**AP30F-0102■-■**	R G / M3 H3
	Mixed (Spare window)	Full voltage R partial voltage CR partial voltage	LED lamp	S T –	–		R Spare / M3 M3
	Mixed (With external light shielding)	AP30F only	LED lamp Incandescent lamp	X	–		Shield R Shield G / M3 M3
Sheet No.2	Rectangular two-section lamp Horizontal window	Same voltage for both of the two rectangular sections	LED lamp Incandescent lamp	T	2	**AP30F-0102M3-T2**	R G / M3
Sheet No.3	Rectangular two-section lamp Vertical window	Same voltage for both of the two rectangular sections	LED lamp Incandescent lamp	V		**AP30F-0201M3-V2**	R / G M3
Sheet No.4	Half size	B3, C3, E3 (X3 when mixed)	LED lamp	H	–	**AP30F-0101E3-H**	R E3 / G E3

(Note) The illuminating surface shape for the external light shield (AP30F only) is manufactured as either an S (frontal) or T (horizontally rectangular) shape.
(On the specification sheet, fill in "Shield" on the upper left side and R (color) on the right side.

■Ex. Sheet No.1 For mixed [voltage, spare window, external light shield]

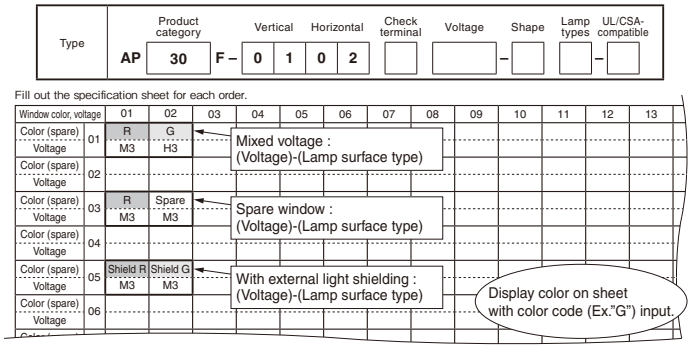

■Ex. Sheet No.3 For rectangular two-section lamp [vertical window V2]

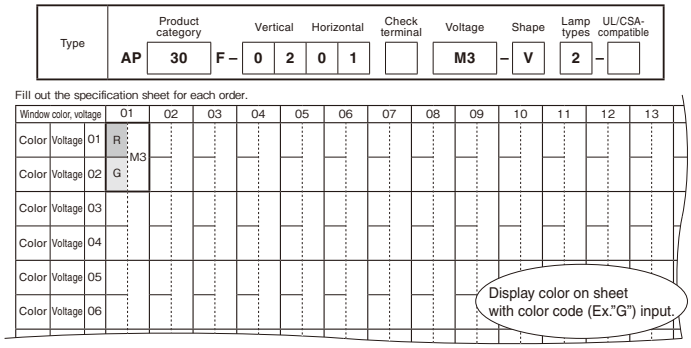

■Ex. Sheet No.2 For rectangular two-section lamp [horizontal window T2]

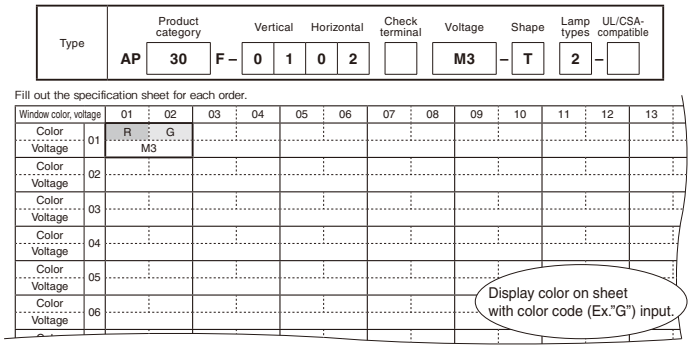

■Ex. Sheet No.4 For half size [H]

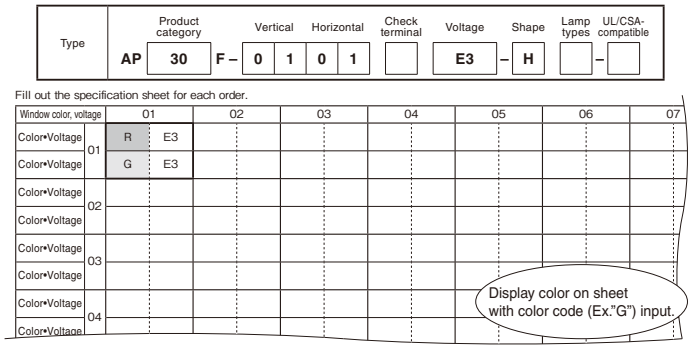

Multi Display Lights AP30F and AP40F

Multi-panel Concentrated Indication Lamp Specification Sheet

(AP30F, AP40F product category)

For mixed [voltage, spare window, external light shield]

Order Date Day Month Year

Customer order number		Your company name	
Manufacturer handling number		No.	

Fuji Electric FA Components & Systems Co., Ltd.

Office		Person in charge	
TEL	– –		

Type	Product category	Vertical	Horizontal	Check terminal	Voltage	Shape	Lamp types	UL/CSA-compatible			
AP		F –					–		–		

Quantity		Delivery time	Day Month

Fill out the specification sheet for each order.

Window color, voltage		01	02	03	04	05	06	07	08	09	10	11	12	13	14	15	16	17	18	19	20
Color (spare)	01																				
Voltage																					
Color (spare)	02																				
Voltage																					
Color (spare)	03																				
Voltage																					
Color (spare)	04																				
Voltage																					
Color (spare)	05																				
Voltage																					
Color (spare)	06																				
Voltage																					
Color (spare)	07																				
Voltage																					
Color (spare)	08																				
Voltage																					

[Personal information purpose of use]
The personal information (address, name, phone number, order details, etc.) that you indicate on the specification sheet will only be used for sale activities concerning the products you have ordered.
[Disclosure to third parties]
We will not disclose your personal information without your consent to any third parties other than our group companies and only within the scope necessary to fulfill the purpose of use. However, personal information may be disclosed without your consent when disclosure is required by laws or regulations.
Refer to the Fuji Electric FA Components & Systems Co., Ltd. website (https://www.fujielectric.com/fcs/index.html) to read our Privacy Policy.

[Caution]
・Spare incandescent lamps cannot be manufactured.
・The voltage indication on the spare window is X3.
・Fill in the required items marked in yellow.

Dotted line

Multi-panel Concentrated Indication Lamp Specification Sheet

(AP30F, AP40F product category)

For rectangular two-section lamp [horizontal window T2]

Order Date Day Month Year

Customer order number		Your company name	
Manufacturer handling number		No.	

Fuji Electric FA Components & Systems Co., Ltd.

Office		Person in charge	
TEL	– –		

Type	Product category	Vertical	Horizontal	Check terminal	Voltage	Shape	Lamp types	UL/CSA-compatible			
AP		F –					–		–		

Quantity		Delivery time	Day Month

Fill out the specification sheet for each order.

Window color, voltage		01	02	03	04	05	06	07	08	09	10	11	12	13	14	15	16	17	18	19	20
Color	01																				
Voltage																					
Color	02																				
Voltage																					
Color	03																				
Voltage																					
Color	04																				
Voltage																					
Color	05																				
Voltage																					
Color	06																				
Voltage																					
Color	07																				
Voltage																					
Color	08																				
Voltage																					

[Personal information purpose of use]
The personal information (address, name, phone number, order details, etc.) that you indicate on the specification sheet will only be used for sale activities concerning the products you have ordered.
[Disclosure to third parties]
We will not disclose your personal information without your consent to any third parties other than our group companies and only within the scope necessary to fulfill the purpose of use. However, personal information may be disclosed without your consent when disclosure is required by laws or regulations.
Refer to the Fuji Electric FA Components & Systems Co., Ltd. website (https://www.fujielectric.com/fcs/index.html) to read our Privacy Policy.

[Caution]
・ The lamp voltage specifications inside the two sections of rectangular two-section lamps cannot be manufactured as a mixed product.
・ Fill in the required items marked in yellow.

Multi-panel Concentrated Indication Lamp Specification Sheet

(AP30F, AP40F product category)

For rectangular two-section lamp [vertical window V2]

Order Date Day Month Year

Fuji Electric FA Components & Systems Co., Ltd.

Your company name	

Office		Person in charge	
TEL	– –		

Type	Product category	Vertical	Horizontal	Check terminal	Voltage	Shape	Lamp types	UL/CSA-compatible
AP	F –				–		–	

Quantity		Delivery time	Day Month

Fill out the specification sheet for each order.

Window color, voltage			01	02	03	04	05	06	07	08	09	10	11	12	13	14	15	16	17	18	19	20
Color	Voltage	01																				
Color	Voltage	02																				
Color	Voltage	03																				
Color	Voltage	04																				
Color	Voltage	05																				
Color	Voltage	06																				
Color	Voltage	07																				
Color	Voltage	08																				

[Personal information purpose of use]
The personal information (address, name, phone number, order details, etc.) that you indicate on the specification sheet will only be used for sale activities concerning the products you have ordered.
[Disclosure to third parties]
We will not disclose your personal information without your consent to any third parties other than our group companies and only within the scope necessary to fulfill the purpose of use. However, personal information may be disclosed without your consent when disclosure is required by laws or regulations.
Refer to the Fuji Electric FA Components & Systems Co., Ltd. website (https://www.fujielectric.com/fcs/index.html) to read our Privacy Policy.

[Caution]
- The lamp voltage specifications inside the two sections of rectangular two-section lamps cannot be manufactured as a mixed product.
- Fill in the required items marked in yellow.

Dotted line

Multi-panel Concentrated Indication Lamp Specification Sheet

(AP30F, AP40F product category)

For half size [H]

Order Date Day Month Year

Fuji Electric FA Components & Systems Co., Ltd.

Customer order number			
Manufacturer handling number		No.	

Your company name	

Office		Person in charge	
TEL	– –		

Type	Product category	Vertical	Horizontal	Check terminal	Voltage	Shape	Lamp types	UL/CSA-compatible
AP	F –				–		–	

Quantity		Delivery time	Day Month

Fill out the specification sheet for each order.

Window color, voltage		01	02	03	04	05	06	07	08	09	10
Color•Voltage	01										
Color•Voltage											
Color•Voltage	02										
Color•Voltage											
Color•Voltage	03										
Color•Voltage											
Color•Voltage	04										
Color•Voltage											
Color•Voltage	05										
Color•Voltage											

[Personal information purpose of use]
The personal information (address, name, phone number, order details, etc.) that you indicate on the specification sheet will only be used for sale activities concerning the products you have ordered.
[Disclosure to third parties]
We will not disclose your personal information without your consent to any third parties other than our group companies and only within the scope necessary to fulfill the purpose of use. However, personal information may be disclosed without your consent when disclosure is required by laws or regulations.
Refer to the Fuji Electric FA Components & Systems Co., Ltd. website (https://www.fujielectric.com/fcs/index.html) to read our Privacy Policy.

[Caution]
- Fill in the required items marked in yellow.

AC09, 16 and 32

Digital code output type

■ Description

FUJI AC series rotary switches offer a wide choice of output codes. They feature sliding Au-flashed contacts for high contact reliability. Inhibitor and parity check circuits guard against switch malfunctions caused by error signals. With only seven connections to make, these switches are an economical solution to multiposition switching needs.

■ Features

- Au-flashed contacts for high contact reliability.
- The protection of operator section meets the IP65 (IEC), so these switches can be used in oil-splash environments, such as on machine tool control panels. (Except for AC32)
- A wide choice of output codes fits a broad range of applications. Available step angles are 15, 30, and 360°/26 (13.85°). Real binary code, complementary binary code, and real gray code are available.
- Switches are available with connectors or with lock rings for easy handling.
- Stopper screw positions are user selectable.

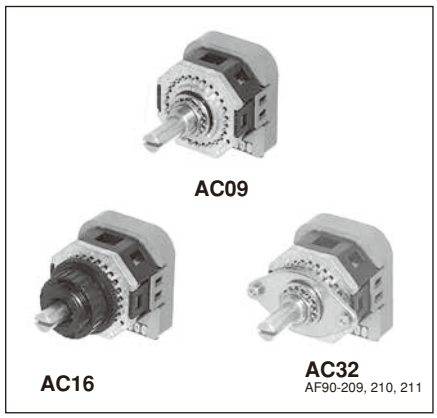

■ Ratings

Volts	Operational current (A) (resistive load)
50V AC	0.05
5V AC	0.5
25V DC	0.05
5V DC	0.25

■ Performance

Rated insulation voltage		50V
Operating temperature		–20 to +70°C
Humidity		45 to 85%RH (non condensation)
Service life	Mechanical	50,000 operations
	Electrical	50,000 operations
Dielectric strength	Between terminals	250V AC, 1 minute
	Between terminals and ground	1500V AC, 1 minute
Insulation resistance	Between terminals	500MΩ or more
	Between terminals and ground	5,000MΩ or more
Degree of protection(operator section)		AC09, AC16 : IP65 (IEC60529) AC32 : IP40 (IEC60529)

■ Type number nomenclature

AC 09 – C Z 0 / 25 L1 E A01 / 0007

Basic type

Mounting
09: M9 nut
16: M16 adapter
32: Adapter
(32mm mounting pitch)

Type of code
R: Real binary code
C: Complementary binary code
G: Real gray code

Angle of step

	Angle	Setting position
X:	30°	0 to 11
W:	360°/13 (27.69°)	0 to 12
Y:	15°	0 to 23
Z:	360°/26 (13.85°)	0 to 25

Start position

	Available step angle
0 to 11:	30°
0 to 12:	360°/13 (27.69°)
0 to 23:	15°
0 to 25:	360°/26 (13.85°)

End position

	Available step angle
0 to 11:	30°
0 to 12:	360°/13 (27.69°)
0 to 23:	15°
0 to 25:	360°/26 (13.85°)

With or without lock ring
Blank: Without lock ring
0007: With lock ring
0009: With adhesive lock ring

With or without connector
Blank: 8-terminal, without connector
A01: 8-terminal, with right-angle connector
A02: 8-termianl, with straight connector
B00: 7-terminal, without connector
B01: 7-terminal, with right-angle connector
B02: 7-terminal, with straight connector

With or without stopper screw
Blank: With stopper screw
E: Without stopper screw

Length of shaft (mm)

	AC09	AC16	AC32
L1:	16	—	14.5
L2:	18	—	16.5
L3:	20	—	18.5
L4:	22	19.5	20.5

Note: When shorter action than the maximum range of switch action is used, stopper screws are used. However, stopper screws are not used if the maximum action range is used when either 15° (symbol Y) or 360°/26 (symbol Z) is specified.

• **M9 nut mounting**

Angle of step	Connector	Lock ring	Type *1 *2 *3		
			Real binary code	Complementary binary code	Real gray code
30°	Without connector	Without lock ring With lock ring With adhesive lock ring	AC09-RX□/□( )■ AC09-RX□/□( )■/0007 AC09-RX□/□( )■/0009	AC09-CX□/□( )■ AC09-CX□/□( )■/0007 AC09-CX□/□( )■/0009	AC09-GX□/□( )■ AC09-GX□/□( )■/0007 AC09-GX□/□( )■/0009
	With right angle connector	Without lock ring With lock ring With adhesive lock ring	AC09-RX□/□( )■01 AC09-RX□/□( )■01/0007 AC09-RX□/□( )■01/0009	AC09-CX□/□( )■01 AC09-CX□/□( )■01/0007 AC09-CX□/□( )■01/0009	AC09-GX□/□( )■01 AC09-GX□/□( )■01/0007 AC09-GX□/□( )■01/0009
	With straight connector	Without lock ring With lock ring With adhesive lock ring	AC09-RX□/□( )■02 AC09-RX□/□( )■02/0007 AC09-RX□/□( )■02/0009	AC09-CX□/□( )■02 AC09-CX□/□( )■02/0007 AC09-CX□/□( )■02/0009	AC09-GX□/□( )■02 AC09-GX□/□( )■02/0007 AC09-GX□/□( )■02/0009
360°/13 (27.69°)	Without connector	Without lock ring With lock ring With adhesive lock ring	AC09-RW□/□( )■ AC09-RW□/□( )■/0007 AC09-RW□/□( )■/0009	AC09-CW□/□( )■ AC09-CW□/□( )■/0007 AC09-CW□/□( )■/0009	
	With right angle connector	Without lock ring With lock ring With adhesive lock ring	AC09-RW□/□( )■01 AC09-RW□/□( )■01/0007 AC09-RW□/□( )■01/0009	AC09-CW□/□( )■01 AC09-CW□/□( )■01/0007 AC09-CW□/□( )■01/0009	
	With straight connector	Without lock ring With lock ring With adhesive lock ring	AC09-RW□/□( )■02 AC09-RW□/□( )■02/0007 AC09-RW□/□( )■02/0009	AC09-CW□/□( )■02 AC09-CW□/□( )■02/0007 AC09-CW□/□( )■02/0009	
15°	Without connector	Without lock ring With lock ring With adhesive lock ring	AC09-RY□/□( )■ AC09-RY□/□( )■/0007 AC09-RY□/□( )■/0009	AC09-CY□/□( )■ AC09-CY□/□( )■/0007 AC09-CY□/□( )■/0009	AC09-GY□/□( )■ AC09-GY□/□( )■/0007 AC09-GY□/□( )■/0009
	With right angle connector	Without lock ring With lock ring With adhesive lock ring	AC09-RY□/□( )■01 AC09-RY□/□( )■01/0007 AC09-RY□/□( )■01/0009	AC09-CY□/□( )■01 AC09-CY□/□( )■01/0007 AC09-CY□/□( )■01/0009	AC09-GY□/□( )■01 AC09-GY□/□( )■01/0007 AC09-GY□/□( )■01/0009
	With straight connector	Without lock ring With lock ring With adhesive lock ring	AC09-RY□/□( )■02 AC09-RY□/□( )■02/0007 AC09-RY□/□( )■02/0009	AC09-CY□/□( )■02 AC09-CY□/□( )■02/0007 AC09-CY□/□( )■02/0009	AC09-GY□/□( )■02 AC09-GY□/□( )■02/0007 AC09-GY□/□( )■02/0009
360°/26 (13.85°)	Without connector	Without lock ring With lock ring With adhesive lock ring	AC09-RZ□/□( )■ AC09-RZ□/□( )■/0007 AC09-RZ□/□( )■/0009	AC09-CZ□/□( )■ AC09-CZ□/□( )■/0007 AC09-CZ□/□( )■/0009	AC09-GZ□/□( )■ AC09-GZ□/□( )■/0007 AC09-GZ□/□( )■/0009
	With right angle connector	Without lock ring With lock ring With adhesive lock ring	AC09-RZ□/□( )■01 AC09-RZ□/□( )■01/0007 AC09-RZ□/□( )■01/0009	AC09-CZ□/□( )■01 AC09-CZ□/□( )■01/0007 AC09-CZ□/□( )■01/0009	AC09-GZ□/□( )■01 AC09-GZ□/□( )■01/0007 AC09-GZ□/□( )■01/0009
	With straight connector	Without lock ring With lock ring With adhesive lock ring	AC09-RZ□/□( )■02 AC09-RZ□/□( )■02/0007 AC09-RZ□/□( )■02/0009	AC09-CZ□/□( )■02 AC09-CZ□/□( )■02/0007 AC09-CZ□/□( )■02/0009	AC09-GZ□/□( )■02 AC09-GZ□/□( )■02/0007 AC09-GZ□/□( )■02/0009

Notes:
*1 Replace the □□ marks by the Start and End positions

Step angle	30°	360°/13	15°	360°/26
Start and End positions	0 to 11	0 to 12	0 to 23	0 to 25

*2 Replace the ( ) mark by the shaft length code
L1: 16mm L2: 18mm L3: 20mm L4: 22mm

*3 Replace the ■ mark by the connector
Blank: 8-terminal, without connector
A01: 8-terminal, with right angle connector
A02: 8-terminal, with straight connector
B00: 7-terminal, without connector
B01: 7-terminal, with right angle connector
B02: 7-terminal, with straight connector

• M16 adapter mounting

Angle of step	Connector	Type*1 *2		
		Real binary code	Complementary binary code	Real gray code
30°	Without connector With right angle connector With straight connector	AC16-RX□/□L4■ AC16-RX□/□L4■01 AC16-RX□/□L4■02	AC16-CX□/□L4■ AC16-CX□/□L4■01 AC16-CX□/□L4■02	AC16-GX□/□L4■ AC16-GX□/□L4■01 AC16-GX□/□L4■02
360°/13 (27.69°)	Without connector With right angle connector With straight connector	AC16-RW□/□L4■ AC16-RW□/□L4■01 AC16-RW□/□L4■02	AC16-CW□/□L4■ AC16-CW□/□L4■01 AC16-CW□/□L4■02	
15°	Without connector With right angle connector With straight connector	AC16-RY□/□L4■ AC16-RY□/□L4■01 AC16-RY□/□L4■02	AC16-CY□/□L4■ AC16-CY□/□L4■01 AC16-CY□/□L4■02	AC16-GY□/□L4■ AC16-GY□/□L4■01 AC16-GY□/□L4■02
360°/26 (13.85°)	Without connector With right angle connector With straight connector	AC16-RZ□/□L4■ AC16-RZ□/□L4■01 AC16-RZ□/□L4■02	AC16-CZ□/□L4■ AC16-CZ□/□L4■01 AC16-CZ□/□L4■02	AC16-GZ□/□L4■ AC16-GZ□/□L4■01 AC16-GZ□/□L4■02

Notes:
*1 Replace the □□ marks by the Start and End positions

Step angle	30°	360°/13	15°	360°/26
Start and End positions	0 to 11	0 to 12	0 to 23	0 to 25

*2 Replace the ■ mark by the connector
Blank: 8-terminal, without connector
A01: 8-terminal, with right angle connector
A02: 8-terminal, with straight connector
B00: 7-terminal, without connector
B01: 7-terminal, with right angle connector
B02: 7-terminal, with straight connector

• Adaptor mounting (32mm mounting pitch)

Angle of step	Connector	Type*1 *2 *3		
		Real binary code	Complementary binary code	Real gray code
30°	Without connector With right angle connector With straight connector	AC32-RX□/□( )■ AC32-RX□/□( )■01 AC32-RX□/□( )■02	AC32-CX□/□( )■ AC32-CX□/□( )■01 AC32-CX□/□( )■02	AC32-GX□/□( )■ AC32-GX□/□( )■01 AC32-GX□/□( )■02
360°/13 (27.69°)	Without connector With right angle connector With straight connector	AC32-RW□/□( )■ AC32-RW□/□( )■01 AC32-RW□/□( )■02	AC32-CW□/□( )■ AC32-CW□/□( )■01 AC32-CW□/□( )■02	
15°	Without connector With right angle connector With straight connector	AC32-RY□/□( )■ AC32-RY□/□( )■01 AC32-RY□/□( )■02	AC32-CY□/□( )■ AC32-CY□/□( )■01 AC32-CY□/□( )■02	AC32-GY□/□( )■ AC32-GY□/□( )■01 AC32-GY□/□( )■02
360°/26 (13.85°)	Without connector With right angle connector With straight connector	AC32-RZ□/□( )■ AC32-RZ□/□( )■01 AC32-RZ□/□( )■02	AC32-CZ□/□( )■ AC32-CZ□/□( )■01 AC32-CZ□/□( )■02	AC32-GZ□/□( )■ AC32-GZ□/□( )■01 AC32-GZ□/□( )■02

Notes:
*1 Replace the □□ marks by the Start and End positions

Step angle	30°	360°/13	15°	360°/26
Start and End positions	0 to 11	0 to 12	0 to 23	0 to 25

*2 Replace the ( ) mark by the shaft length
L1: 14.5mm L2: 16.5mm L3: 18.5mm L4: 20.5mm

*3 Replace the ■ mark by the connector
Blank: 8-terminal, without connector
A01: 8-terminal, with right angle connector
A02: 8-terminal, with straight connector
B00: 7-terminal, without connector
B01: 7-terminal, with right angle connector
B02: 7-terminal, with straight connector

■ 24-position

R: Real binary code

Terminal No.	Bit No.	Setting position 0	1	2	3	4	5	6	7	8	9	10	11	12	13	14	15	16	17	18	19	20	21	22	23
A	1		●		●		●		●		●		●		●		●		●		●		●		●
F	2			●	●			●	●			●	●			●	●			●	●			●	●
B	4					●	●	●	●					●	●	●	●					●	●	●	●
E	8									●	●	●	●	●	●	●	●								
C	16																	●	●	●	●	●	●	●	●
G	INH	●	●	●	●	●	●	●	●	●	●	●	●	●	●	●	●	●	●	●	●	●	●	●	●
D	C																								

C: Complementary binary code

Terminal No.	Bit No.	Setting position 0	1	2	3	4	5	6	7	8	9	10	11	12	13	14	15	16	17	18	19	20	21	22	23
A	1	●		●		●		●		●		●		●		●		●		●		●		●	
F	2	●	●			●	●			●	●			●	●			●	●			●	●		
B	4	●	●	●	●					●	●	●	●					●	●	●	●				
E	8	●	●	●	●	●	●	●	●									●	●	●	●	●	●	●	●
C	16	●	●	●	●	●	●	●	●	●	●	●	●	●	●	●	●								
G	INH	●	●	●	●	●	●	●	●	●	●	●	●	●	●	●	●	●	●	●	●	●	●	●	●
D	C																								

G: Real gray code

Terminal No.	Bit No.	Setting position 0	1	2	3	4	5	6	7	8	9	10	11	12	13	14	15	16	17	18	19	20	21	22	23
A	a		●	●			●	●			●	●			●	●			●	●			●	●	
F	b			●	●	●	●					●	●	●	●					●	●	●	●		
B	c					●	●	●	●	●	●	●	●									●	●	●	●
E	d									●	●	●	●	●	●	●	●	●	●	●	●	●	●	●	●
C	e																	●	●	●	●	●	●	●	●
G	P		●		●		●		●		●		●		●		●		●		●		●		●
D	C																								

■ 12-position

R: Real binary code

Terminal No.	Bit No.	Setting position 0	1	2	3	4	5	6	7	8	9	10	11
A	1		●		●		●		●		●		●
F	2			●	●			●	●			●	●
B	4					●	●	●	●				
E	8									●	●	●	●
C	P		●	●		●			●	●			●
G	INH	●	●	●	●	●	●	●	●	●	●	●	●
D	C												

C: Complementary binary code

Terminal No.	Bit No.	Setting position 0	1	2	3	4	5	6	7	8	9	10	11
A	1	●		●		●		●		●		●	
F	2	●	●			●	●			●	●		
B	4	●	●	●	●					●	●	●	●
E	8	●	●	●	●	●	●	●	●				
C	P		●	●		●			●	●			●
G	INH	●	●	●	●	●	●	●	●	●	●	●	●
D	C												

G: Real gray code

Terminal No.	Bit No.	Setting position 0	1	2	3	4	5	6	7	8	9	10	11
A	a		●	●			●	●			●	●	
F	b			●	●	●	●					●	●
B	c					●	●	●	●	●	●	●	●
E	d									●	●	●	●
C	P		●		●		●		●		●		●
G													
D	C												

■ 26-position

R: Real binary code

Terminal No.	Bit No.	Setting position 0	1	2	3	4	5	6	7	8	9	10	11	12	13	14	15	16	17	18	19	20	21	22	23	24	25
A	1		●		●		●		●		●		●		●		●		●		●		●		●		●
F	2			●	●			●	●			●	●			●	●			●	●			●	●		
B	4					●	●	●	●					●	●	●	●					●	●	●	●		
E	8									●	●	●	●	●	●	●	●									●	●
C	16																	●	●	●	●	●	●	●	●	●	●
G	INH	●	●	●	●	●	●	●	●	●	●	●	●	●	●	●	●	●	●	●	●	●	●	●	●	●	●
D	C																										

C: Complementary binary code

Terminal No.	Bit No.	Setting position 0	1	2	3	4	5	6	7	8	9	10	11	12	13	14	15	16	17	18	19	20	21	22	23	24	25
A	1	●		●		●		●		●		●		●		●		●		●		●		●		●	
F	2	●	●			●	●			●	●			●	●			●	●			●	●			●	●
B	4	●	●	●	●					●	●	●	●					●	●	●	●					●	●
E	8	●	●	●	●	●	●	●	●									●	●	●	●	●	●	●	●		
C	16	●	●	●	●	●	●	●	●	●	●	●	●	●	●	●	●										
G	INH	●	●	●	●	●	●	●	●	●	●	●	●	●	●	●	●	●	●	●	●	●	●	●	●	●	●
D	C																										

G: Real gray code

Terminal No.	Bit No.	Setting position 0	1	2	3	4	5	6	7	8	9	10	11	12	13	14	15	16	17	18	19	20	21	22	23	24	25
A	a		●	●			●	●			●	●			●	●			●	●			●	●			●
F	b			●	●	●	●					●	●	●	●					●	●	●	●				
B	c					●	●	●	●	●	●	●	●									●	●	●	●	●	●
E	d									●	●	●	●	●	●	●	●	●	●	●	●	●	●	●	●		
C	e																	●	●	●	●	●	●	●	●	●	●
G	P		●		●		●		●		●		●		●		●		●		●		●		●		●
D	C																										

■ 13-position

R: Real binary code

Terminal No.	Bit No.	Setting position 0	1	2	3	4	5	6	7	8	9	10	11	12
A	1		●		●		●		●		●		●	
F	2			●	●			●	●			●	●	
B	4					●	●	●	●					●
E	8									●	●	●	●	●
C	P		●	●		●			●	●			●	
G	INH	●	●	●	●	●	●	●	●	●	●	●	●	●
D	C													

C: Complementary binary code

Terminal No.	Bit No.	Setting position 0	1	2	3	4	5	6	7	8	9	10	11	12
A	1	●		●		●		●		●		●		●
F	2	●	●			●	●			●	●			●
B	4	●	●	●	●					●	●	●	●	
E	8	●	●	●	●	●	●	●	●					
C	P		●	●		●			●	●			●	
G	INH	●	●	●	●	●	●	●	●	●	●	●	●	●
D	C													

INH : Inhibit terminal
P : Parity check terminal
C : Common terminal
● : Turned ON

■ Accessories

Lead wire with connector (8-terminal)

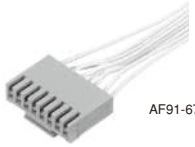

AF91-675

Length of lead wire (m)	Type	Mass (g)
0.5	**ACX011-805**	11
1.0 (Standard)	**ACX011-810**	19
2.0	**ACX011-820**	33

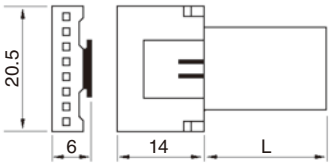

L: 0.5, 1.0, 2.0m

Lock ring

AF91-710

	Type	Mass (g)
Lock ring (inserted)	**ACX001**	2
Lock ring (sealed)	**ACX001A**	5

ACX001

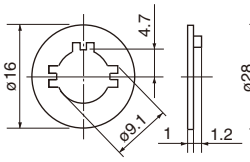

ACX001A

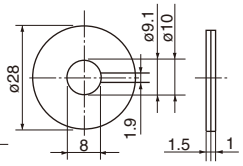

C1

■ Dimensions, mm

AC09

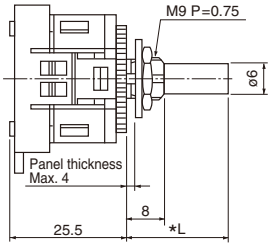

8-terminal

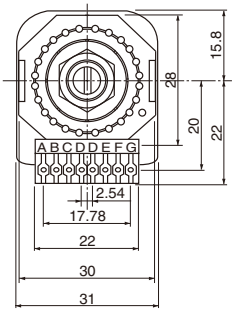

Shaft length *	L1	L2	L3	L4
	16	18	20	22
Mass (g)				
Without connector	41	42	43	44
With connector	42	43	44	45

Panel cutting

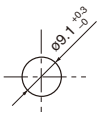

AC09 (with connector)

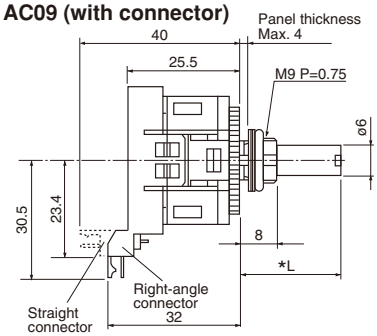

8-terminal

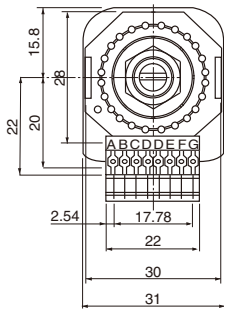

Panel cutting

In case of using lock ring
(AC09-□/0007)

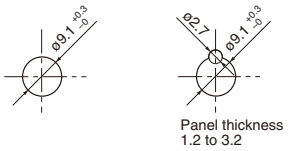

AC16

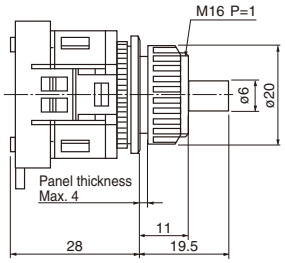

Mass: 47g

8-terminal

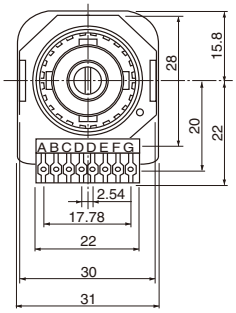

Panel cutting

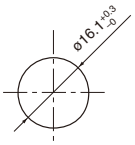

AC32

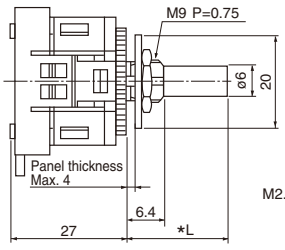

8-terminal

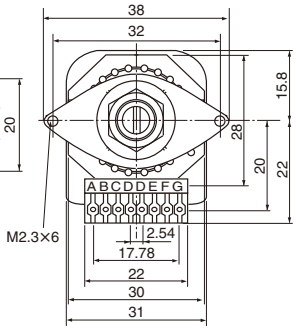

Shaft length *	L1	L2	L3	L4
	14.5	16.5	18.5	20.5
Mass (g)	47	48	49	50

Panel cutting

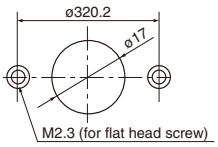

■ Installation

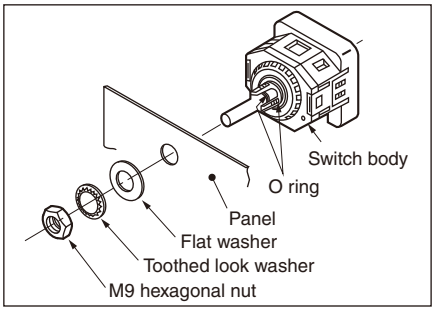

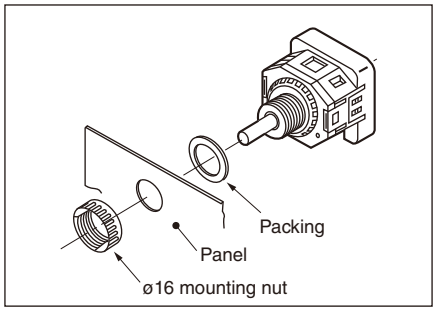

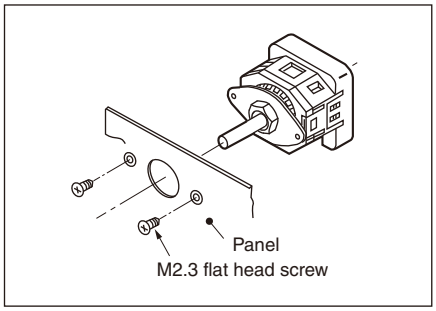

AC09
Pass the switch body through the hole from the back of the panel, and secure it by tightening the hexagonal nut with a flat washer and a toothed lock washer.
The recommended tightening torque for the hexagonal nut is 1.5 to 2N·m.
Insert the lock ring (ACX001) between the panel and the flat washer, and the adhesive lock ring (ACX001A) between the switch body and the panel.

AC16
Pass the switch body with a bezel through the hole from the back of the panel, and secure it with a ϕ16 mounting nut. The recommended tightening torque for the nut is 0.6 to 1N·m.

AC32
Pass the switch body through the hole from the back of the panel, and secure it with two flat head screws from the face of the panel. The recommended tightening torque for the flat head screws is 0.3 to 0.5N·m.

■ Notes on use

1. Connecting wires

Note the following points when soldering:

- The power of the soldering iron must not be over 30W.
- Use solder with resin flux core.
- Complete soldering within 5 seconds if using a 30W soldering iron, or within 10 seconds if using a 20W soldering iron.

2. Note on the case linkage

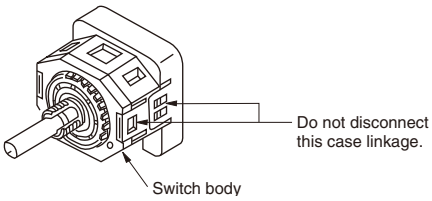

3.Number of stopper screws shipped

● AC09 and AC32

- Step angle: 30° (symbol X)
  Positions 0/11 (0 to 11): one screw. User-selectable start and stop positions: two screws (one for start position, one for end position).
- Step angle: 15° (symbol Y)
  Positions 0/22 (0 to 22): one screw. User-selectable start and stop positions: two screws (one for start position, one for end position).
- Step angle: 360°/26 (symbol Z)
  Positions 0/24 (0 to 24): one screw. User-selectable start and stop positions: two screws (one for start position, one for end position).

● AC16
Customers can specify the stopper screw positions. The switch is then shipped with stopper screws already in the specified positions.

4. Stopper screw positions

Insert stopper screws into the switch body holes marked with letters, as shown in the insertion example on the right. These tables below show that the start position stopper screw is inserted in the hole on the left of the position setting and the end positions stopper screw is inserted in the hole on the right.

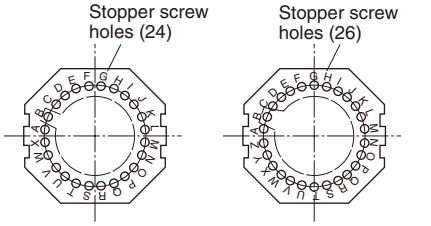

If step angle X (30°) or Y (15°) is specified.

If step angle W (360°/13) or Z (360°/26) is specified.

5. Installing a stopper screw

The maximum tightening torque for a stopper screw is 0.1N·m. Screw the stopper screw into position until it hits the body frame rib. Do not overtighten the screw.

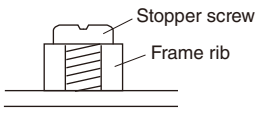

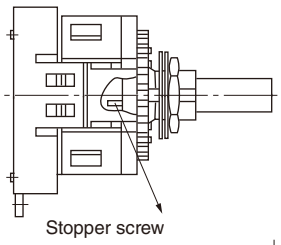

Insertion example 1

AC09-C □ 0/7L1 □

① **Step angle**
X: 30°, W: 360°/13,
Y: 15°, Z: 360°/26

② **Start position setting: 0**

③ **End position setting: 7**

④ **With a stopper screw**
Blank: With stopper screw
E: No stopper screw

- **If symbol ① (step angle) is X-----type AC09-CX0/7L1:**
  Insert the start side stopper screw in hole A and the end side screw in hole Q.

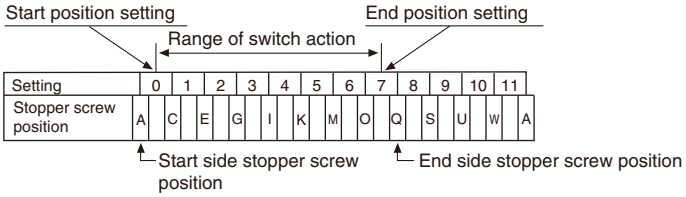

- **If symbol ① (step angle) is W-----type AC09-CW0/7L1:**
  Insert the start side stopper screw in hole A and the end side screw in hole Q.

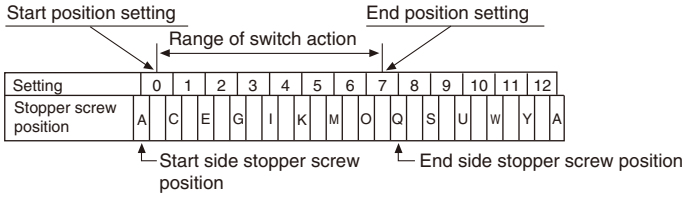

- **If symbol ① (step angle) is Y-----type AC09-CY0/7L1:**
  Insert the start side stopper screw in hole A and the end side screw in hole J.

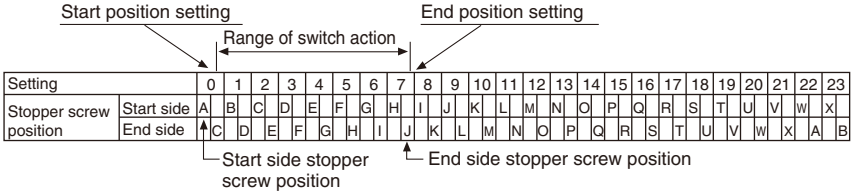

Notes: 1. If the range of action is designated as 0/22 (0 to 22), insert a stopper screw into hole A only.
2. If the range of action is designated as 0/23 (0 to 23), no stopper screws are inserted (symbol ④ is E).

- **If symbol ① (step angle) is Z-----type AC09-CZ0/7L1:**
  Insert the start side stopper screw in hole A and the end side screw in hole J.

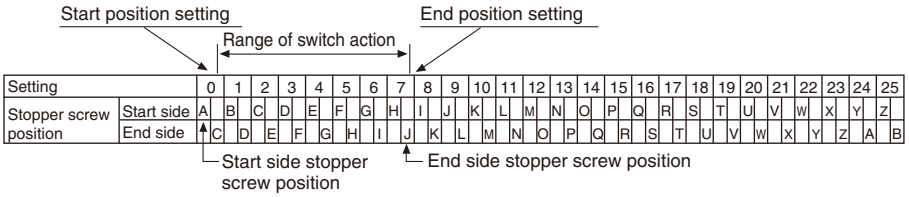

Notes: 1. If the range of action is designated as 0/24 (0 to 24), insert a stopper screw in hole A only.
2. If the range of action is designated as 0/25 (0 to 25), no stopper screws are inserted (symbol ④ is E).

Insertion example 2

AC09-RX2/11

Step angle
Start position setting

End position setting

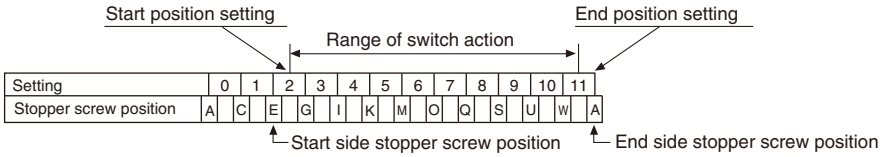

ø22 Control Cam Switch AK22-1

Ideal for Diversified Circuit Configurations

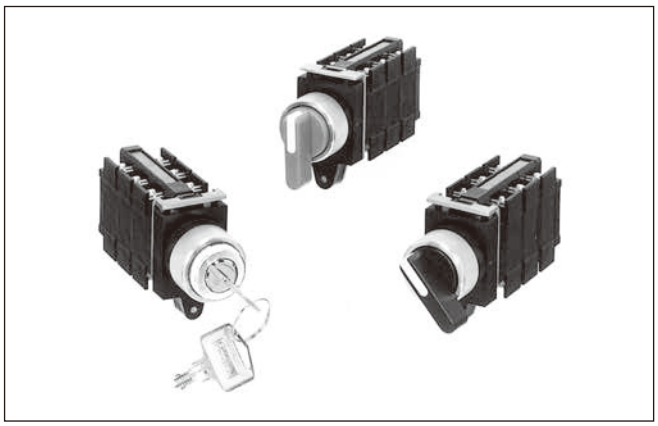

■ Features

- Many contact arrangements possible with adoption of double cam.
- Water jet proof, oil-tight operation mechanism structure.
- High contact reliability achieved with bifurcated contacts.
- Space saving type with 30 mm switch width. (does not include lever type)
- Equipped with indicator allowing contact operation to be verified from outside.
- Separate structure facilitating easy maintenance after panel mounting.
- TÜV, CCC certified products available.

■ Applications

- Use with low-voltage, low-current circuits in electronized control circuits.
- Use with control circuits requiring high contact reliability such as those used in steel plants, cement plants, and industrial plants.

⚠ CAUTION

Do not use 30° notch parts with different potential. Failure to observe this may result in a short-circuit arc.

■ Ratings

Rated insulation voltage [V]	Conventional free air thermal current (rated thermal current) [A]	Rated operational voltage [V]	Rated operational current [A]			
			AC		DC	
			Inductive load	Resistive load	Inductive load	Resistive load
			(AC-15)	(AC-12)	(TC = 100 ms) (DC-13)	(DC-12)
600	10	12	5	7.5	1	5
		24	5	7.5	1	5
		50	3	6	1	2.5
		110	3	6	0.5	1.3
		220	3	6	0.2	0.5
		440	1.3	2.6	0.1	0.2
		550	1	2	0.05	0.1

■ Specifications

Insulation resistance		100 MΩ or higher, measured with 500 V megger tester
Dielectric strength		2,500 VAC for 1 minute
Vibration resistance		Constant vibration durability: vibration frequency of 16.7 Hz, double amplitude of 3 mm
Shock resistance	Shock malfunction	100 m/s^2
	Shock durability	500 m/s^2
Switching frequency		600 times/hour (duty cycle: 40%)
Operational ambient temperature		-20 to 70°C (however, there should be no freezing or dew condensation)
Operational relative humidity		45 to 85% RH (at -5 to 40°C, however, there should be no freezing or dew condensation)
Protective construction (operation part)		IP65 (dust-proof, jet-proof construction): IEC60529 IP65F (dust-proof, jet-proof, oil-tight construction): JIS C 0920
Contact reliability		AC, 5 VDC, 5 mA (However, areas in which products can be used may differ depending on ambient environmental factors and load type.)

■ Durability (life expectancy)

Mechanical			Electrical
Knob type	Maintained	1 million times	100,000 times
	Spring return	250,000 times	
Key shape		250,000 times	
	Key insertion/removal	10,000 times	

■ Conforming standards

JIS C 8201-5-1
: Low-voltage switchgear and control devices
NECA C 4522
: Control cam switches

■ International standard certification

1. TÜV
   File No. R 9551382
   EN 60947-5-1
2. CCC
   (Add “CCC” to end of the type when order)

ø22 Control Cam Switch
AK22-1

■ Types

Knob type	Type, exterior	Reset type	Number of notches	Notch angle See page 7 for handle and key operation positions. N stands for notch.		Contact arrangement (Note 4) Max. number of element rows	Max. number of contacts	Handle color or key type
Lever type	**AK22-1PW** (Photo: AF88-42)	Manual [M]	2-4 2-6 2-8 5-12	90 ° 60 ° 45 ° 30 °	2N: standard, 3N, 4N: specified 2N to 6N: specified 3N to 8N: standard, 2N: specified 9N to 12N: standard 5N to 8N: specified	6	12	Handle color Standard Black: [B] Red: [R] Green: [G]
		Spring [A]	3	45 °	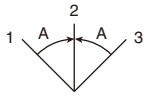	3	6	
		Spring/ manual [C]	3	45 °	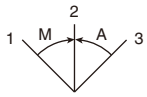 Standard 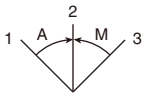 Specified	3	6	
Key type	**AK22-1J** (Photo: AF88-41)	Manual [M]	2-4 2-8	90 ° 45 ° (Note 1)	2N: standard, 3N, 4N: specified 2N: specified 3N to 8N: standard	6	12	Key type A: [A] standard B: [B] C: [C] D: [D] E: [E] F: [F] (Note 2)
		Spring [A]	3	45 °	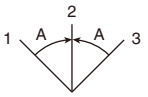	3	6	
		Spring/ manual [C]	3	45 °	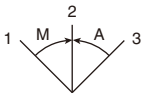 Standard 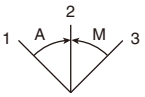 Specified	3	6	

(Note 1) The key operation type cannot be manufactured for 30°, 60° notches.
(Note 2) Key operation type key removal position (maintained) Standard: The key is removed at each notch.
Non-standard: Specify the key removal position (2, 3 notches).
(Note 3) Products with residual contacts cannot be manufactured.
(Note 4) The key is removed at each notch on the key operation type with 4 notches or more.
The key insertion and removal position can be specified on products with 4 notches or less and notch angle of 45°.

■ Ordering information (type number nomenclature)

AK22-1 M 3105 PWB □ □ □ □

Basic type
ϕ22 mounting type

Reset type

Reset type	Symbol
Maintained	M
Spring return	A
Spring/manual return	C

Contact arrangement
Select the contact arrangement suited to the application from the main connection diagrams (pages 48 to 66). All cams may not be available for the contact arrangements in the main connection diagrams, and so we ask that you consult with Fuji Electric. If the desired contact arrangement cannot be found in the diagrams, however, confirm whether the cam can be manufactured, and then enter C (abbreviation of control) and append the separate request form.
(Note) If specifying the notch angle and start position, enter C and append the separate request form for all contact arrangements.

Handle color

Handle color	Symbol	
Black	Lever type	PWB
Red		PWR
Green		PWG

Handle color	Symbol	
Black	Knob type	PB
Red		PR
Green		PG
Key (stainless steel)	J	

Key insertion, removal position (up to 3 notches)

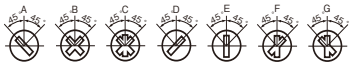

Key type (standard: A)
A , B , C , D , E , F

Special specification

	Symbol
Fully rotating (other than key operation)	E

Standard certified part

	Symbol
CCC certified part	CCC

Fuji Electric FA Components & Systems Co., Ltd.
Information subject to change without notice

■ Handle, key operation positions

The standard handle and key operation positions are as follows.

Reset type	Notch angle	Knob start position				Applicable notch
Maintained (M)	90 °					2N: standard notch 3 N to 4 N: Specified
		2 notches	3 notches	4 notches		
	60 °	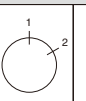	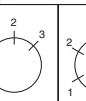			2 N to 6 N: Specified
		2 notches	3 notches	4 notches	5 notches	
		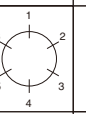				
		6 notches				

(Note) Products with notches allocated on left and right with notch intermediate position as reference cannot be manufactured.

(Note) The start position can also be specified (please inquire for details).

Reset type	Notch angle	Knob start position				Applicable notch
Maintained (M)	45 °		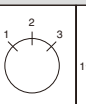	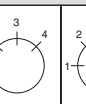		2N: specified 3 N to 8 N: Standard notch
		2 notches	3 notches	4 notches	5 notches	
		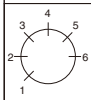	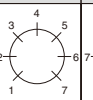	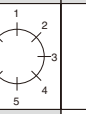		
		6 notches	7 notches	8 notches		
	30 °					5 N to 8 N: Specified
		5 notches	6 notches	7 notches	8 notches	
		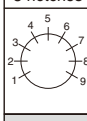	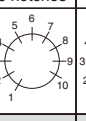	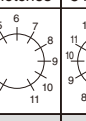		9 N to 12 N: Standard notch
		9 notches	10 notches	11 notches	12 notches	

(Note) 12N is a fully rotating type knob (no stopper).

■ External dimensions [unit: mm]

● AK22-1

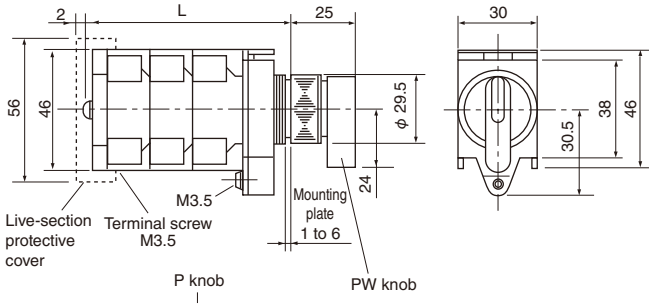

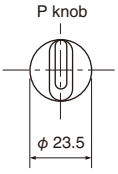

Dimensions table

Number of rows	1	2	3	4	5	6
L	46	62	78	94	110	126

* If equipped with live-section protective cover: +2 mm

● AK22-1J

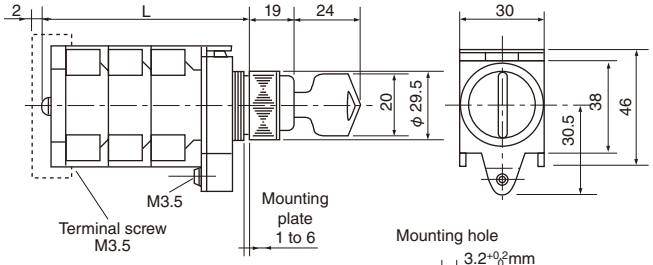

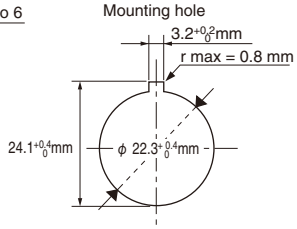

(Note) There is no need to drill a 3.2 mm width hole if not using a key washer or symbol plate.

■ Mounting dimensions [unit: mm]

Min. mounting pitch

These are reference dimensions.

Depending on the workability, operability, and operational voltage, use after checking against the external dimensions.

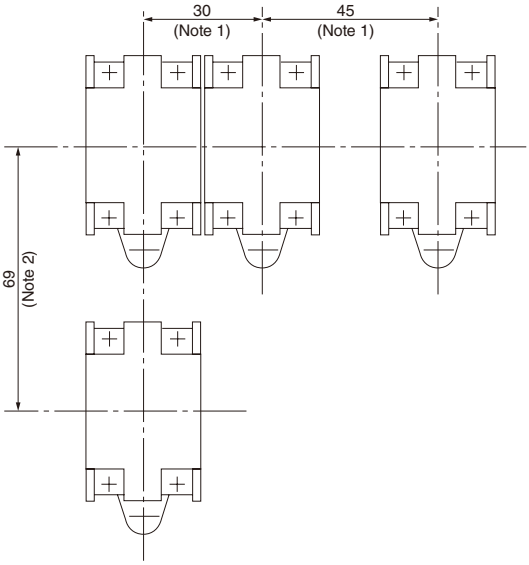

(Note 1) 30 mm for products with P type knob or key.
45 mm for products with symbol plate (□45).
39 mm for products with PW type knob, or P type knob and key.
49 mm for products with PW type knob or PW type knob with 4 notches or more.

(Note 2)

Number of element rows	1 to 2	3	4	5	6
Top, bottom pitch	69	89	108	135	161

The level (top, bottom) with most element rows should be the standard.

ø22 Control Cam Switch
AK22-1

■ Parts

Name, exterior	Type	External dimensions [unit: mm]
Symbol plate (Photo No. AF88-45)		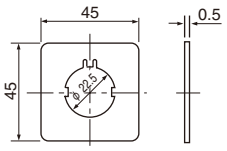
PW handle (lever) (Photo No. AF88-43)		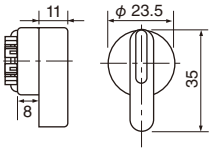
P handle (knob) (Photo No. AF88-73)		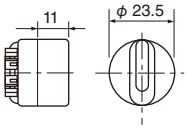
Wrench (Photo No. SI-1030)		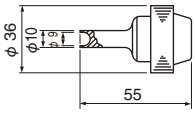
Packing (Photo No. SI-299)		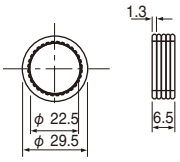
Key washer (Photo: No. SP214)		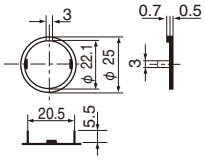
Tightening ring (Photo No. AF88-44)		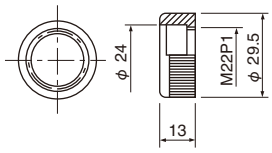
Live-section protective cover 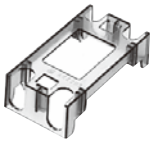 (Photo No. AF94-245)		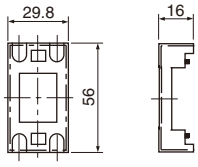
J shape (cylinder key)	AR9C022-□ □: A to F	

Type	Color
AKX201	Aluminum
AKX202	Black

Type	Color
AHX780-B	Black
AHX780-R	Red
AHX780-G	Green

* The indication chip (white arrow) should be ordered separately.
The type is AHX782-W.

Type	Color
AHX779-B	Black
AHX779-R	Red
AHX779-G	Green

* The indication chip (white arrow) should be ordered separately.
The type is AHX782-W.

Type	–
AHX702	–

Type	Thickness
AHX730	1.3 x 5

Type	–
AHX715	–

Type	Material	Color
AHX744-A	Aluminum	Aluminum
AHX744-B	Aluminum	Black

Type	–
AKX203	–

* This is for the reverse side.

Fuji Electric FA Components & Systems Co., Ltd.
Information subject to change without notice

Cam-type control selector switches

■ Description

FUJI cam-type control switches are recommended for use on switchboards, control panels and switchgear because of their reliability in service. The main type is RC310 with operational current ratings of 10A.
Simplified and economical circuits can be designed around the RC310, since it can handle loads of up to 10A at 220VAC without the need of contactors. Typical examples of complex circuits based on the attractive features of these economical cam-type selector switches are given on pages C1-265 to C1-268.
FUJI is prepared to manufacture other versions to suit your particular applications, and switches with up to 12 selector positions can be made to order.
RC310 switches are normally supplied with H-type handles. Alternative handle shapes available include the pistol-grip P-type, cane-handle shaped S-type and rosette shaped R-type.
Switches with a 2-12 position maintained type, 3-position center spring-return type and center spring-return type with locking device are also available.

■ Ordering information

Specify the following *(See page C1-268):*

1. Type number
2. Mounting method
3. Operation
4. Selector position and notch angles
5. No. of contact blocks
6. Contact arrangement
7. Handle
8. Handle colors

Example

Cam switch,
rated current 10A RC310-1
Flush mounting x
Maintained operation ..... M
Contact arrangement 3201
(3-position, 2 contact blocks,
H type handle ..... H
Black color handle..... B
Type number RC310x-1M3201HB

Note: "C" in the type No. nomenclature must be filled with numbers appearing in the table of "The Contact Arrangement". *(page C1-269)*
When requiring special arrangements not appearing in the list clearly specify the arrangement required. Note that "C" in the type nomenclature must not be removed in this case.
RC310x-1MCHB

Type	Flush mounting x-type	Semi-flush mounting	Enclosed g-type
RC310-1	SG-740 **RC310x-1**	SG-743 **RC310-1**	AF-191 **RC310g-1**

■ Ratings

Type	Rated thermal current (A)	Breaking capacity (A) Voltage (V)	AC Inductive	DC Resistive	DC Inductive
RC310-1	10	24	10	10	5
		110	7.5	3	1.3
		220	7.5	0.8	0.45
		440	2.5	0.4	0.2
		550	2	0.3	0.15

■ Technical data

Insulation resistance: Over 100M at 500VDC
Dielectric strength: 2,500VAC. 1 minute
Ambient temperature: –5° to +60°C
Operating cycle: 600 cycles/hour

■ Contact arrangement: *See page C1-265.*

⚠ CAUTION

Do not use 30° notch parts with different potential. Failure to observe this may result in a short-circuit arc.

■ Conforming standards

JIS C 8201-5-1
: Low-voltage switchgear and control devices
NECA C 4522
: Control cam switches

■ International standard certification

1. TÜV
   File No. R 9551382
   EN 60947-5-1
2. CCC
   (Add "CCC" to end of the type when order)

■ Life expectancy (operations)

Type	Mechanical	Electrical
RC310-1	5 million	250,000 at 220VAC 7.5A 500,000 at 220VAC 3A

■ Contact arrangement (typical)

(Viewed from the direction of the handle)

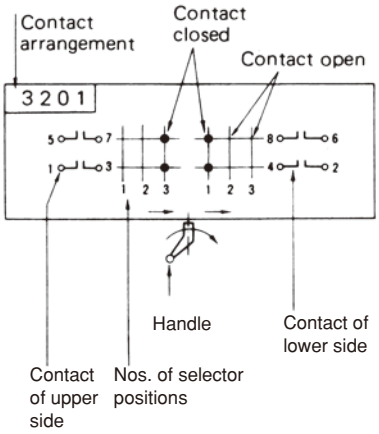

Control selector switches
RC310

■ Type number nomenclature

RC310 series

RC310 □ -1□ □ □ □

- Mounting
  - Blank: Semi-flush mounting
  - x: Flush mounting
  - g: With enclosure
- Operation
- Contact arrangement *See page C1-265*
- Handle
- Handle color

• Handle color B: Black

• Operation

Model	Description	
M	Maintained	
A	Center spring return	
L	Center spring return with locking device (Pull to turn)	

● Available

• Selector position and notch angle

Operation	Notch angle	Position
M	90° 2 position	
	90° * 3, 4 position	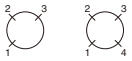
	45° * 3-8 position	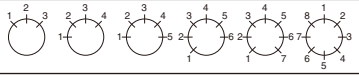
	30° 9-12 position	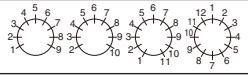
A	45°	
L	45°	(With locking device)

Note: * 3 or 4-position type notch angle is normally 45 degrees.
Specify when ordering other than this.

● Available

• Handle

Type	Standard	Versions						
	H type	R type	W type	S type	P type	K type	D type	G type
RC310-1	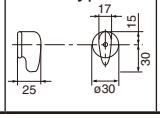	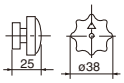	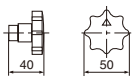	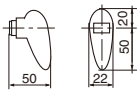	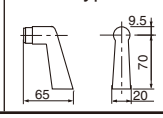	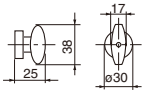	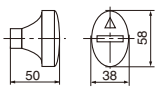	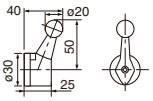

• Ratings

Type	Rated thermal current (A)	Voltage (VAC)	Number of contact blocks	Selector position and notch angle	Flush mounting (x-type) Type	Semi-flush mounting Type	Enclosed (g-type) Type
RC310-1	10	550	1	*See the table above.*	**RC310x-1□■**	**RC310-1□■**	**RC310g-1□■**
			2		**RC310x-1□■**	**RC310-1□■**	**RC310g-1□■**
			3		**RC310x-1□■**	**RC310-1□■**	**RC310g-1□■**
			4		**RC310x-1□■**	**RC310-1□■**	
			5		**RC310x-1□■**	**RC310-1□■**	
			6		**RC310x-1□■**	**RC310-1□■**	–
			7		**RC310x-1□■**	**RC310-1□■**	–
			8		**RC310x-1□■**	**RC310-1□■**	–
			9		**RC310x-1□■**	**RC310-1□■**	–
			10		**RC310x-1□■**	**RC310-1□■**	–

Note: □: Type of operation ■: Contact arrangement – *See page C1-269*

■ Contact arrangement

The following diagrams show the cam-type selector switch contact arrangement. These are only typical examples and other versions can be manufactured to meet your special requirements. Contact FUJI for details.
The figures appearing on the right side indicate the contact arrangement. This information must be given when ordering.

3 2 0 1
- No. of contact arrangements: Indicates the arrangement number.
- No. of contact blocks: Up to 10 blocks can be mounted. (0 indicates 10 blocks)
- No. of selector positions

2-position 1-contact block

2101	2102 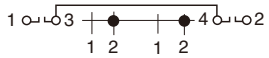	2103 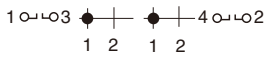	2104
2105 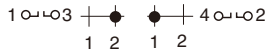	2106 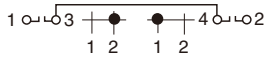	2107 Over rap contact (early make, late break) 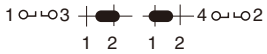	2108 Over rap contact (early make, late break)

2-position 2-contact block

2201 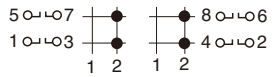	2202 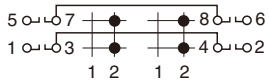	2203 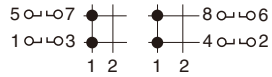	2204 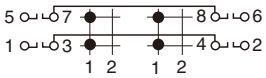
2205 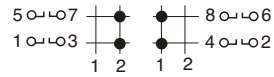	2206 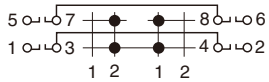	2207 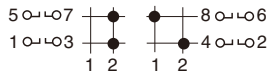	2208 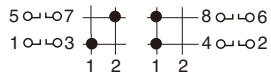

2-position 3-contact block

2301 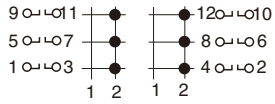	2302 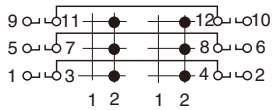	2303 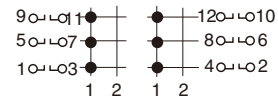	2304 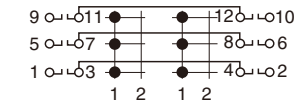
2305 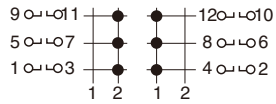	2306 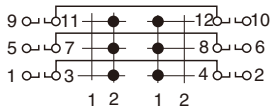	2307 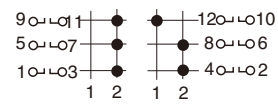	2308 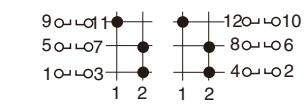

2-position 4-contact block

2401 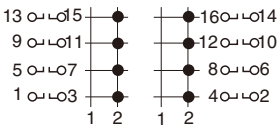	2402 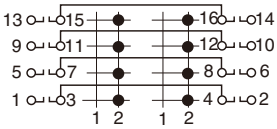	2403 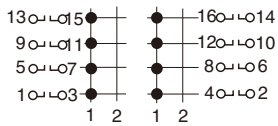	2404 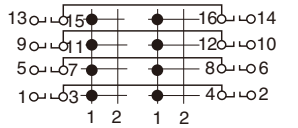
2405 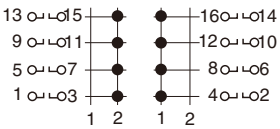	2406 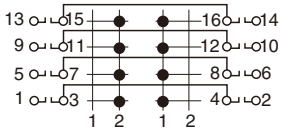	2407 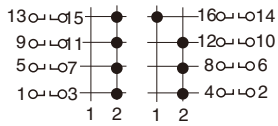	2408 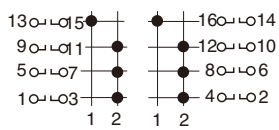

Control selector switches
RC310

■ Contact arrangement
3-position 1-contact block

3101	3102	3103	3104
3105	3106	3107	3108 Notch angle : 90°
3109	3110	3111	3112

3-position 2-contact block

3201	3202	3203	3204
3205	3206	3207	3208
3209	3210	3211	3212

3-position 3-contact block

3301	3302	3303	3304
3305	3306	3307	3308
3309	3310	3311	3312

Fuji Electric FA Components & Systems Co., Ltd.
Information subject to change without notice

■ Contact arrangement

4-position 2-contact block

4201 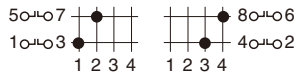	4202 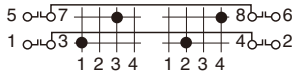	4203 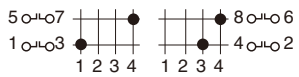	4204 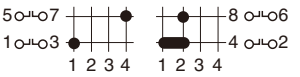
4205 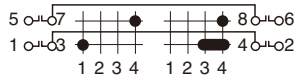	4206 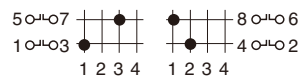	4207 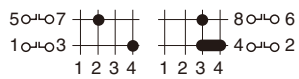	4208 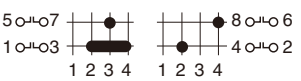
4209 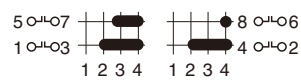	4210 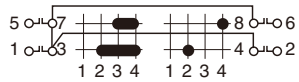	4211 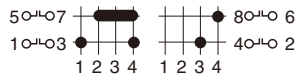	4212 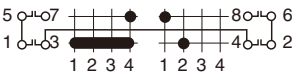

4-position 3-contact block

4301 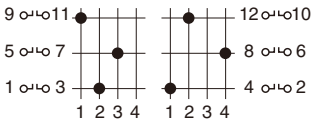	4302 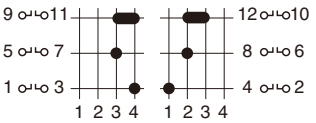	4303 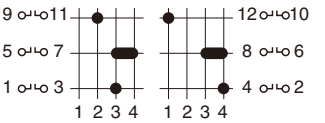	4304 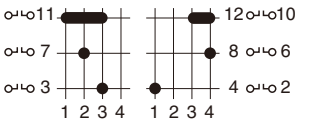
4305 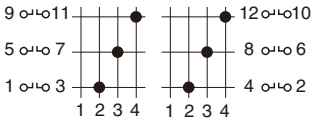	4306 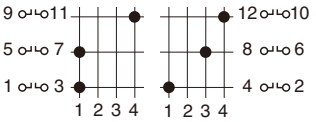	4307 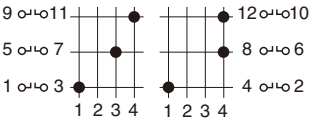	4308 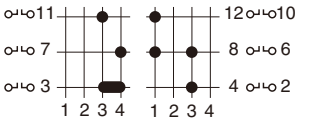
4309 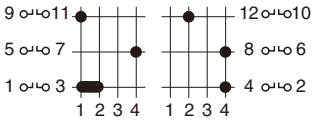	4310 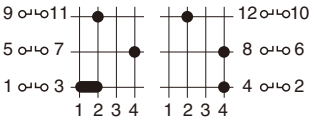	4311 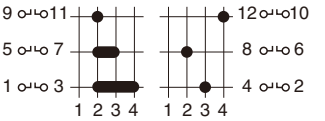	4312 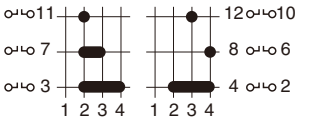

4-position 4-contact block

4401 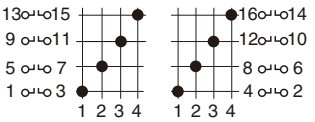	4402 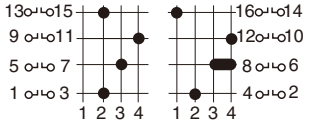	4403 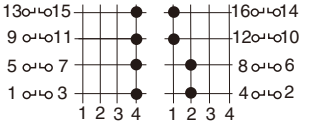	4404 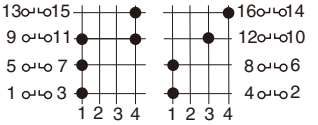
4405 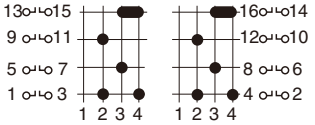	4406 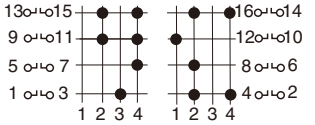	4407 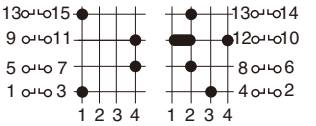	4408 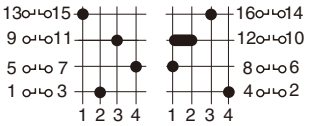
4409 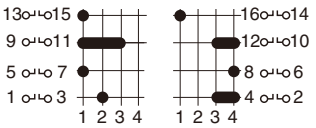	4410 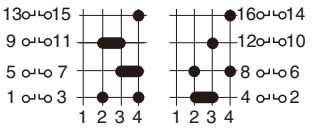	4411 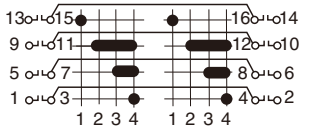	4412 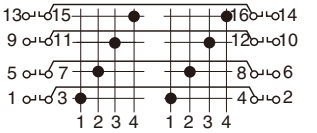

C1

Control selector switches
RC310

■ Contact arrangement
5-position 2-contact block

5201
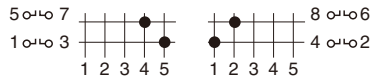

5202
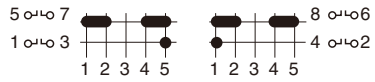

5203
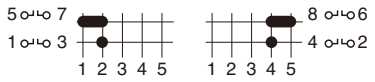

5204
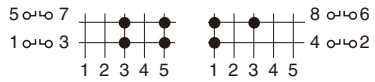

5205
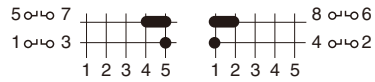

5206
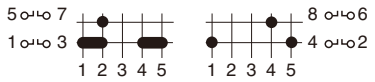

5207
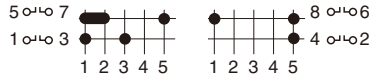

5208
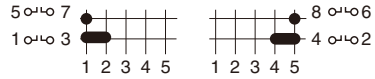

5209
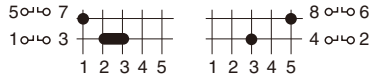

5-position 3-contact block

5301
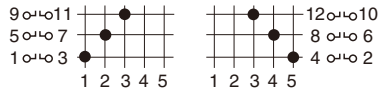

5302
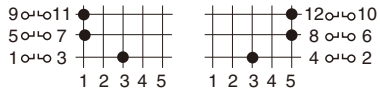

5303
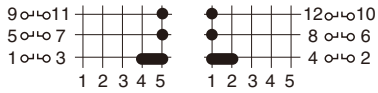

5304
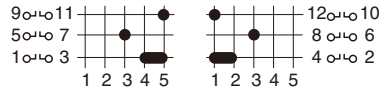

5305
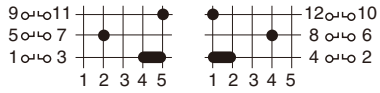

5306
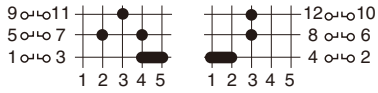

5307
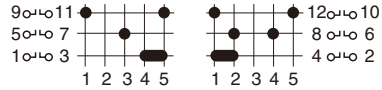

5308
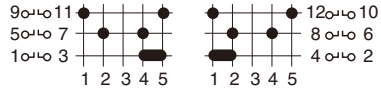

5309
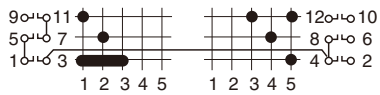

5-position 4-contact block

5401
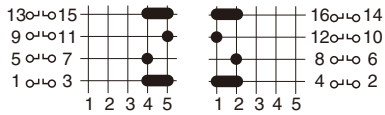

5402
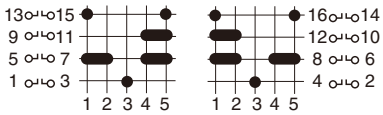

5403
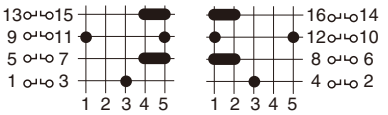

5404
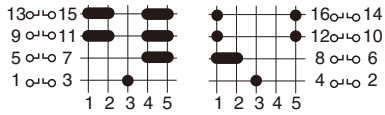

5405
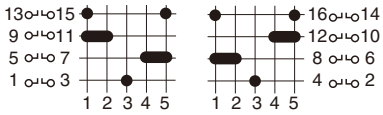

5406
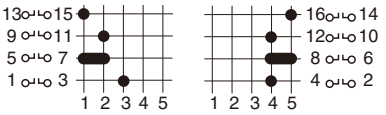

5407
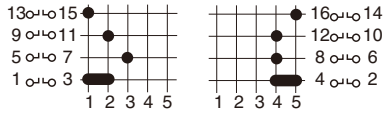

5408
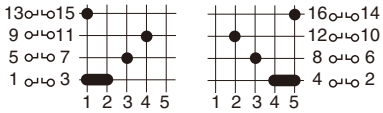

5409
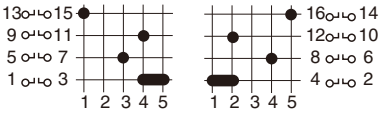

■ Dimensions, mm

Flush mounting
RC310x-1

No. of contact blocks	1	2	3	4	5	6	7	8	9	10
L	39.5	51.5	63.5	75.5	87.5	99.5	111.5	123.5	135.5	147.5

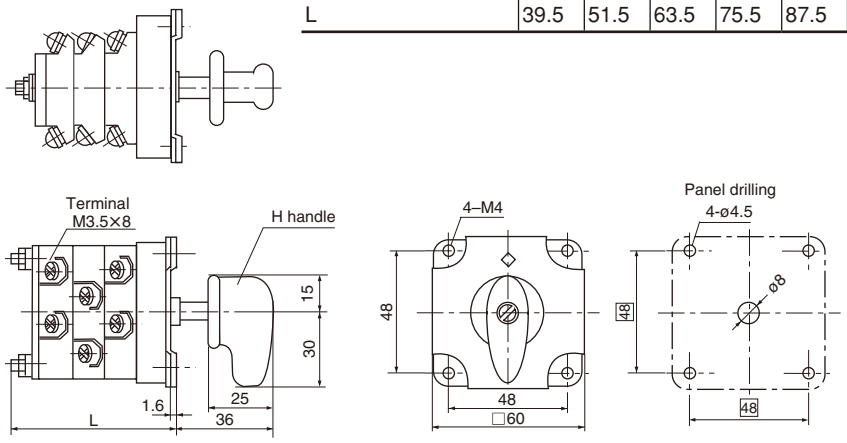

Semi-flush mounting
RC310-1

No. of contact blocks	1	2	3	4	5	6	7	8	9	10
L	39.5	51.5	63.5	75.5	87.5	99.5	111.5	123.5	135.5	147.5

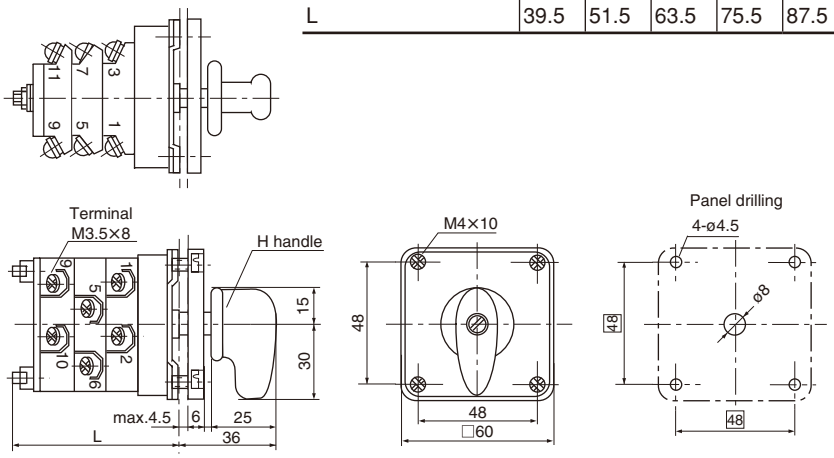

Enclosed (Up to 3-contact block)
RC310g-1

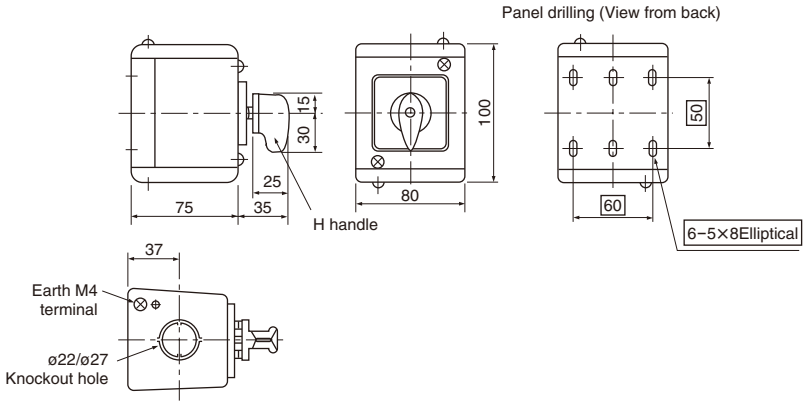

Instrument switches
NS387 and RC310

Voltmeter/Ammeter Changeover Switches

■ Description

These switches are used with voltmeters or ammeters in secondary PT or CT circuits. Normally, 3-phase line voltage or phase current is measured with 3 meters provided, which requires considerable switchboard or console space. Space can be saved by using NS387 and RC310 instrument switches, since the phase current or line voltage can be read with a single meter and either VS or AS (Voltmeter or Ammeter switch). FUJI AS's are precisely and ruggedly constructed, and open circuits do not occur at the time of switch-over, so eliminating the possibility of abnormal voltage trouble. NS387 is a blade-type switch and RC310 is a cam-type. Both are compact in size and use highly dependable silver contacts. FUJI can also supply DC voltmeter type switches in addition to these for AC use.

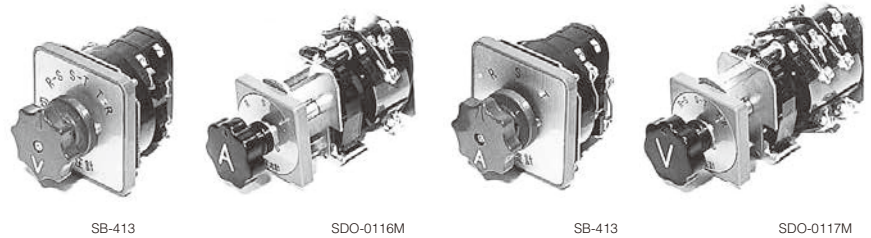

SB-413 **RC310-1V0** | SDO-0116M **NS387/2M** | SB-413 **RC310-1A20** | SDO-0117M **NS387/4V**

■ Ordering information

Specify the following:
1. Type number

C1

Series	Application	Type	Ordering code	No. of contact block	Legend plate *	Handle angle	With or without Off position	Mass (kg)
NS387	AC Voltmeter	**NS387/4V**	AC38V4N	4	R-S · S-T · T-R	2 x 45°	Without	0.5
	AC Voltmeter	**NS387/4V0**	AC38V4F	4	OFF · R-S · S-T · T-R	3 x 45°	With	0.5
	DC Voltmeter	**NS387/2V**	AC38V2N	2	I · OFF · II	2 x 45°	With	0.43
	AC Ammeter	**NS387/2M**	AC38A2N	2	R · S · T	2 x 45°	Without	0.43
	AC Ammeter	**NS387/2M0**	AC38A2F	3	OFF · R · S · T	3 x 45°	With	0.47
	AC Ammeter	**NS387/3M**	AC38A3N	3	R · S · T	2 x 45°	Without	0.47
	AC Ammeter	**NS387/4M**	AC38A43F	4	OFF · R · S · T	3 x 45°	With	0.5
RC310	AC Voltmeter	**RC310-1V**	AK2R1-V32	2	R-S · S-T · T-R	2 x 45°	Without	0.22
	AC Voltmeter	**RC310-1V0**	AK2R1-V42	2	OFF · R-S · S-T · T-R	3 x 45°	With	0.22
	AC Ammeter	**RC310-1A2**	AK2R1-A32	2	R · S · T	2 x 45°	Without	0.22
	AC Ammeter	**RC310-1A20**	AK2R1-A42	2	OFF · R · S · T	3 x 45°	With	0.22
	AC Ammeter	**RC310-1A3**	AK2R1-A33	3	R · S · T	2 x 45°	Without	0.25
	AC Ammeter	**RC310-1A30**	AK2R1-A43	3	OFF · R · S · T	3 x 45°	With	0.25

Note: * For standard type legend plate. Other types can be manufactured by request.

Ratings

Series	Rated thermal current (A)	Making and breaking capacity AC (inductive) Voltage (V)	Make (A)	Break (A)	DC (inductive) Voltage (V)	Make (A)	Break (A)
NS387	15	110	30	3	24	60	60
		220	30	3	110	15	15
		440	20	2	220	5	5
		550	20	2	440	2.5	2.5
RC310	10	110	37.5	7.5	24	37.5	7.5
		220	37.5	7.5	110	37.5	1.3
		440	37.5	2.5	220	37.5	0.45
		550	37.5	1.5	440	37.5	0.15

Handle color (standard)

NS387: Black
RC310: Black

Special spanner (for NS387)

Use this spanner for installation or replacement.

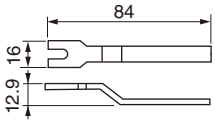

■ Dimensions, mm

NS387

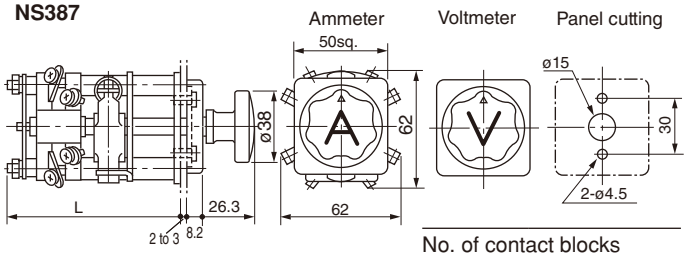

No. of contact blocks	2	3	4
L	90	98	106

RC310

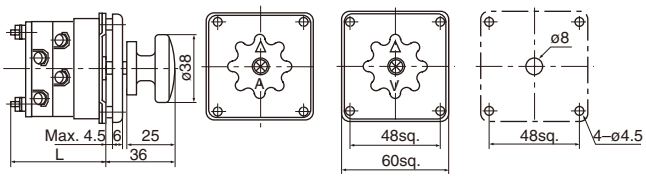

Note: Do not remove the wires connected.

No. of contact blocks	2	3
L	51.5	63.5

Fuji Electric FA Components & Systems Co., Ltd.
Information subject to change without notice

■ Wiring diagrams

Voltmeter changeover switches

• NS387 series

NS387/4V

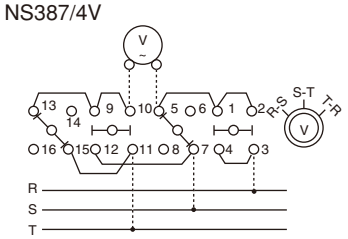

NS387/2V

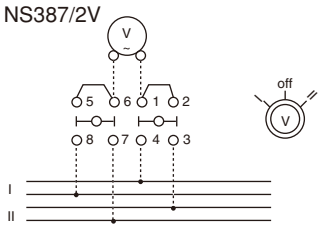

NS387/4V0

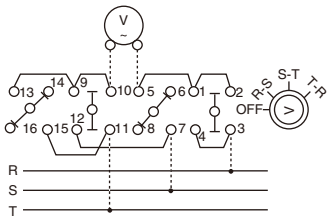

• RC310 series

RC310-1V

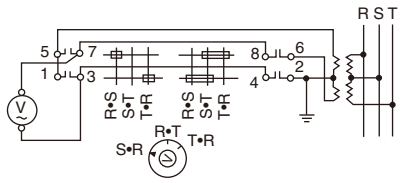

RC310-1V0

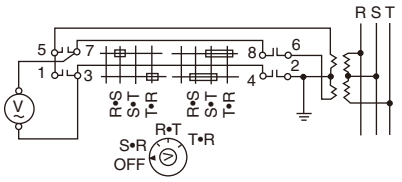

Ammeter changeover switches

• NS387 series

NS387/2M

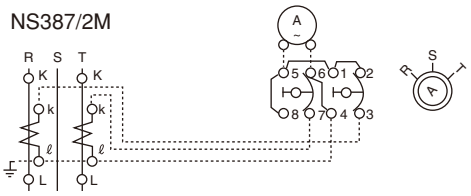

NS387/2M0

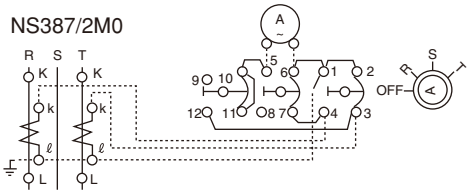

NS387/3M

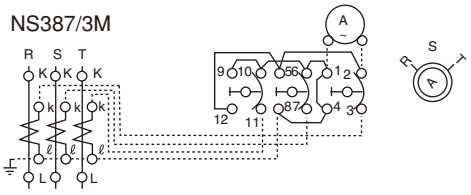

NS387/4M

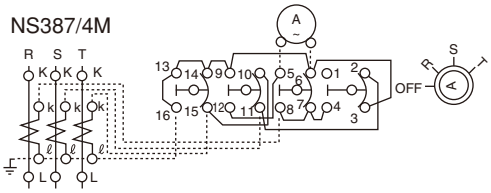

• RC310 series

RC310-1A2

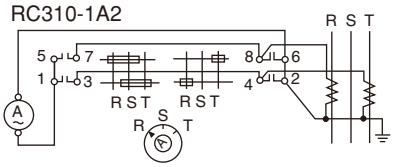

RC310-1A20

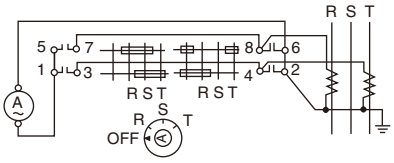

RC310-1A3

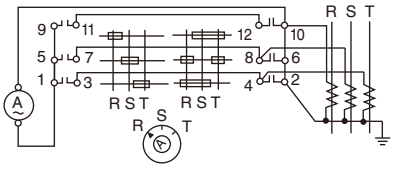

RC310-1A30

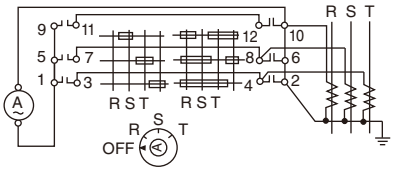

General Information

■ Description

FUJI can supply a variety of terminal blocks for switchboard or switchgear use. FUJI terminal blocks and end barriers are strongly constructed from a phenol resin and have adequate creepage distance and excellent insulation characteristics. Good connections are assured by convenient screw terminals and solderless box lugs. All terminal blocks are designed to carry their rated amperage without danger of overheating.

FUJI terminal blocks are available in a variety of types, some of which are illustrated on this page.

AYBN type is simple to assemble and is designed to speed up installation. It is available in up to 12 poles and 600 Amps versions.

AYBS type terminal blocks are made from the highest quality phenol resin and resists tracking. Current ratings are available up to 115 Amps and 12 poles. The customer is required to assemble the channel-mounted type himself. The modular construction allows the number of blocks in a channel to be increased or decreased very easily.

In addition we can also supply the **LT4D type** which is provided with an isolating switch, and **SKT-J type** power terminal blocks, which are used in motor circuits, power source and similar circuits.

Testing terminals type **LT5** for CT, VT secondary circuits are also available.

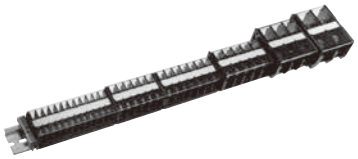

Type LT2E
Rail mounted type terminal blocks
600 volts 22 to 600 Amps
■ **Further information:** *See page C1-287*.

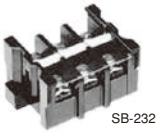
SB-232

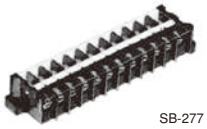
SB-277

Type AYBN
General purpose terminal blocks
600 Volts 15 to 600 Amps
■ **Further information:** *See page C1-281*.

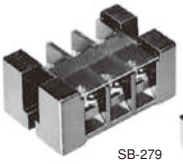
SB-279

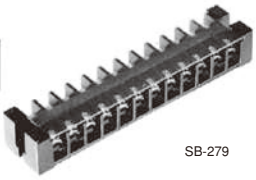
SB-279

Type AYBS
High quality terminal blocks
600 Volts 49 to 115 Amps
■ **Further information:** *See page C1-283*.

Type LT4D
Rail mounted terminal blocks with isolating switch
660 Volts 20 Amps
■ **Further information:** *See page C1-284*.

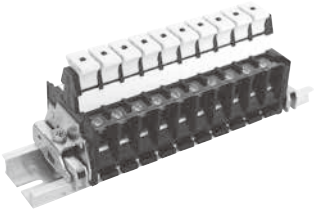

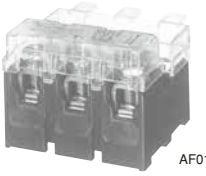
AF01-220

Type SKT-J
Terminal block with pressure solderless box lug type connector on one side and screw type connector on the other.
600 Volts 50 to 200 Amps
■ **Further information:** *See page C1-285*.

Type LT5
Testing terminal and link for VT and CT circuit
250 Volts AC/DC 30 Amps
■ **Further information:** *See page C1-292*.

■ Wire gauge and square

The following table shows the relationship between B.W.G., A.W.G. wire gauge and mm^2 cross-sections. In this catalog wire sizes are quoted in mm^2. Please use this table for reference.

Gauge B.W.G.	A.W.G.	Square mm^2	Gauge B.W.G.	A.W.G.	Square mm^2
	4/0	107.2		9	6.6
4/0		104.2	12		6.0
3/0		91.6		10	5.3
	3/0	85.2	13		4.6
2/0		73.2		11	4.2
	2/0	67.5	14		3.5
0		58.6		12	3.3
	0	53.5	15	13	2.63
1		45.6	16		2.14
	1	42.4		14	2.08
2		40.9	17		1.71
3		34.0		15	1.65
	2	33.6		16	1.32
4		28.7	18		1.22
	3	26.7		17	1.03
5		24.5	19		0.89
	4	21.2		18	0.81
6		20.9		19	0.66
	5	16.8	20		0.62
7		16.4	21	20	0.52
8		13.8		21	0.41
	6	13.3	22		0.40
9		11.1		22	0.32
	7	10.5	23		0.32
10		9.1		23	0.26
	8	8.3	24		0.25
11		7.3		24	0.20

B.W.G. Birminghan Wire Gauge
A.W.G. American Wire Gauge

General purpose terminal blocks 600 Volts

Typical illustration and description	Amps	No. of poles	With spring washer Type	With turtle-shaped washer Type
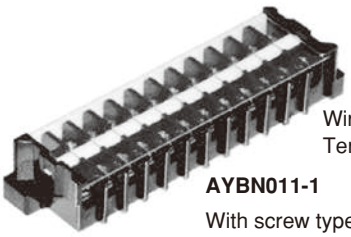 SB-277 Wire size: Max. 2mm² Terminal screw: M3.5 **AYBN011-1** With screw type connectors, marking strip and cover	15	3	**AYBN013-5**	**AYBN013-1**
		4	**AYBN014-5**	**AYBN014-1**
		6	**AYBN016-5**	**AYBN016-1**
		8	**AYBN018-5**	**AYBN018-1**
		10	**AYBN010-5**	**AYBN010-1**
		12	**AYBN011-5**	**AYBN011-1**
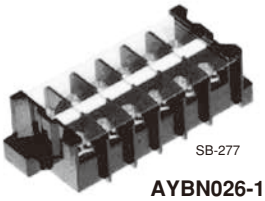 SB-277 Wire size: Max. 5.5mm² Terminal screw: M4 **AYBN026-1** With screw type connectors, marking strip and cover	25	3	**AYBN023-5**	**AYBN023-1**
		4	**AYBN024-5**	**AYBN024-1**
		6	**AYBN026-5**	**AYBN026-1**
		8	**AYBN028-5**	**AYBN028-1**
		10	**AYBN020-5**	**AYBN020-1**
		12	**AYBN021-5**	**AYBN021-1**
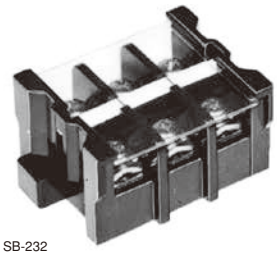 SB-232 Wire size: Max. 14mm² Terminal screw: M5 **AYBN043-1** With screw type connectors, marking strip and cover	40	3	**AYBN043-5**	**AYBN043-1**
		4	**AYBN044-5**	**AYBN044-1**
Wire size: Max. 22mm² Terminal screw: M6	60	3	**AYBN063-5**	**AYBN063-1**
		4	**AYBN064-5**	**AYBN064-1**
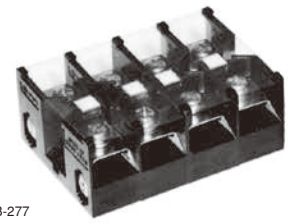 SB-277 Wire size: Max. 60mm² Terminal screw: M8 **AYBN204-5** With screw type connectors, marking strip and cover	150	3	–	**AYBN103-5** *1
		4	–	**AYBN104-5** *1
Wire size: Max. 100mm² Terminal screw: M10	200	3	–	**AYBN203-5** *2
		4	–	**AYBN204-5** *2
Wire size: Max. 200mm² Terminal screw: M12	400	3	–	**AYBN403-5** *2
		4	–	**AYBN404-5** *2
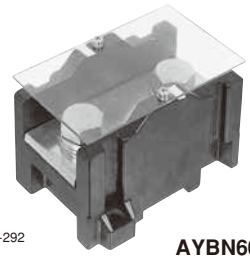 SG-292 **AYBN601-5** Wire size: Max. 325mm² Terminal screw: M16	600	1	–	**AYBN601-5** *2

Notes: *1 Cross recessed pan head screw type.
*2 Hexagonal bolt

Type AYBN

■ Dimensions, mm

15A, 25A Terminal blocks

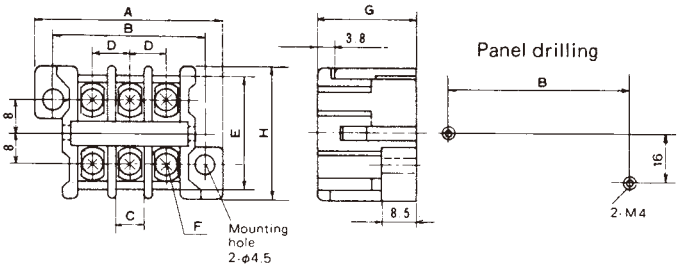

Type	No. of poles	A	B	C	D	E	F	G	H	Mass (g)
AYBN013-1, -5	3	45	37	6.9	9	28	M3.5	23.8	32	20
AYBN014-1, -5	4	54	46	6.9	9	28	M3.5	23.8	32	30
AYBN016-1, -5	6	72	64	6.9	9	28	M3.5	23.8	32	40
AYBN018-1, -5	8	90	82	6.9	9	28	M3.5	23.8	32	50
AYBN010-1, -5	10	108	100	6.9	9	28	M3.5	23.8	32	60
AYBN011-1, -5	12	126	118	6.9	9	28	M3.5	23.8	32	75
AYBN023-1, -5	3	52.5	44.5	9.9	11.5	30	M4	26.8	36	35
AYBN024-1, -5	4	64	56	9.9	11.5	30	M4	26.8	36	40
AYBN026-1, -5	6	87	79	9.9	11.5	30	M4	26.8	36	60
AYBN028-1, -5	8	110	102	9.9	11.5	30	M4	26.8	36	80
AYBN020-1, -5	10	133	125	9.9	11.5	30	M4	26.8	36	95
AYBN021-1, -5	12	156	148	9.9	11.5	30	M4	26.8	36	115

40A, 60A Terminal blocks

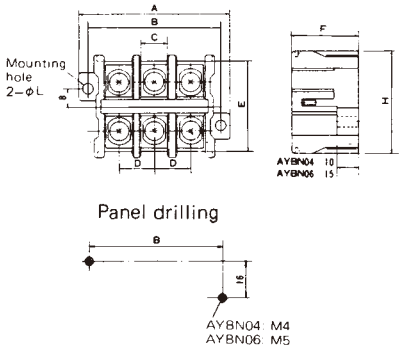

Type	No. of poles	A	B	C	D	E	F	H	L	Mass (g)
AYBN043-1, -5	3	67	59	12.4	16	40	31.8	45	Ø4.5	80
AYBN044-1, -5	4	83	75	12.4	16	40	31.8	45	Ø4.5	110
AYBN063-1, -5	3	90	78	16.9	20	52	39	60	Ø6	160
AYBN064-1, -5	4	113	101	16.9	20	52	39	60	Ø6	210

150A, 200A Terminal blocks

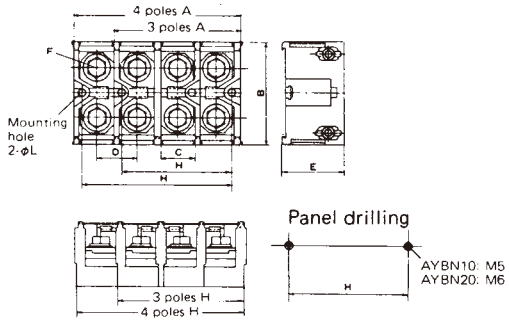

Type	No. of poles	A	B	C	D	E	F	H	L	Mass (g)
AYBN103-5	3	85	79	23	27	51	M8	72	Ø6	390
AYBN104-5	4	112	79	23	27	51	M8	99	Ø6	510
AYBN203-5	3	110	90	29.7	35	63	M10	96	Ø7	740
AYBN204-5	4	145	90	29.7	35	63	M10	131	Ø7	970

400A Terminal blocks

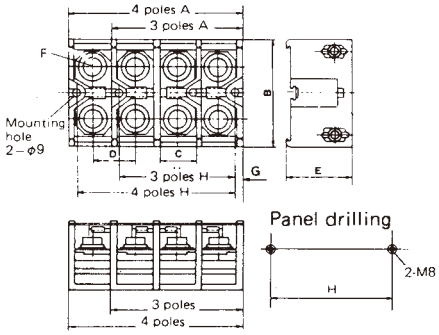

Type	No. of poles	A	B	C	D	E	F	G	H	Mass (g)
AYBN403-5	3	175	120	45	55	82	M12	9.5	156	1670
AYBN404-5	4	230	120	45	55	82	M12	9.5	211	2170

600A Terminal blocks

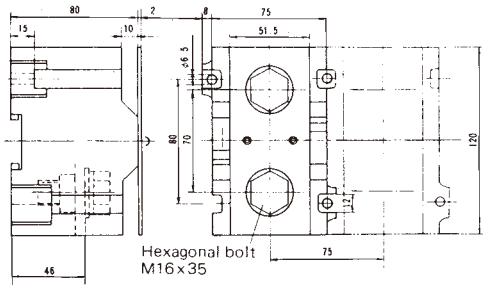

Mass: 1040g

■ Ordering information

Specify the following:

1. Ordering code or type number

■ Technical data

Insulation resistance: Over 100M at 500V DC
Dielectric strength: 2500V AC rms. 1 minute
Ambient temperature: –20° to +40°C

Fuji Electric FA Components & Systems Co., Ltd.
Information subject to change without notice

High quality terminal blocks 600 Volts

Typical illustration and description	Volts	Amps	No. of poles	With spring washer Type	With turtle-shaped washer Type
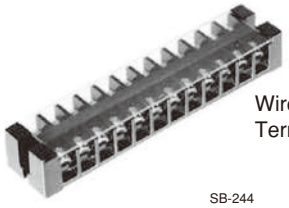 Wire size: Max. 5.5mm^2 Terminal screw: M4 SB-244 **AYBS021-1**	600	49	6 12	**AYBS026-5** **AYBS021-5**	**AYBS026-1** **AYBS021-1**
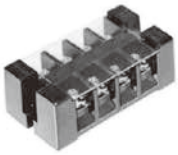 Wire size: Max. 14mm^2 Terminal screw: M5 SB-241 **AYBS044-1**	600	88	3 4 12	**AYBS043-5** **AYBS044-5** **AYBS041-5**	**AYBS043-1** **AYBS044-1** **AYBS041-1**
Wire size: Max. 22mm^2 Terminal screw: M6 SB-239 **AYBS064-1**	600	115	3 4	**AYBS063-5** **AYBS064-5**	**AYBS063-1** **AYBS064-1**

■ Ordering information
Specify the following:
1. Ordering code or type number

■ Technical data
Insulation resistance: Over 100M at 500V DC
Dielectric strength: 2500V AC rms 1 minute
Ambient temperature: –20° to +40°C
–20° to +60°C (at 70% ratings)

■ Dimensions, mm

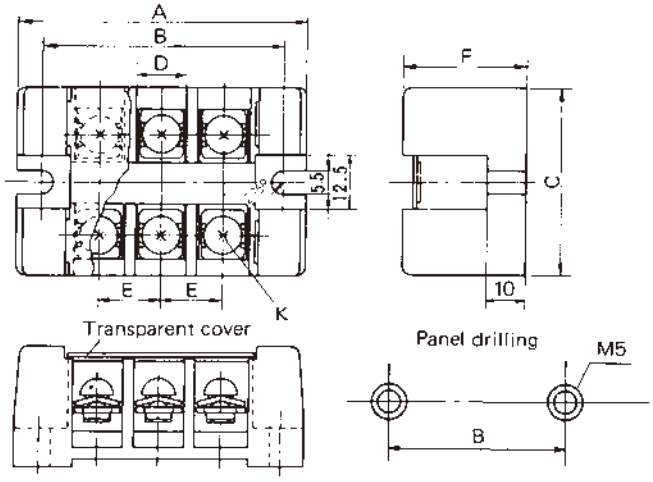

Type	No. of poles	A	B	C	D	E	F	K	Mass (g)
AYBS026-1, -5	6	101	91	40	10	13	28	M4	120(110)*
AYBS021-1, -5	12	179	169	40	10	13	28	M4	220
AYBS043-1, -5	3	72	60.5	46	12.5	15.5	32	M5	110
AYBS044-1, -5	4	88	76	46	12.5	15.5	32	M5	130
AYBS041-1, -5	12	212	200	46	12.5	15.5	32	M5	300
AYBS063-1, -5	3	89	77	60	17	21	35.5	M6	190
AYBS064-1, -5	4	110	98	60	17	21	35.5	M6	240

* For AYBS026-5 type

Type LT4D

Channel mounted type terminal blocks with isolating switch

660 Volts 20 Amps
Wire size: Maximum 5.5mm^2
Terminal screw: M4

These blocks are provided with isolating switches.
When opening the control circuit tentatively for testing or inspection purposes please operate the switch knob. If the leads of an ammeter are connected to both ends of the terminal block and then open the switch the ammeter will then be connected in series and this will allow measurement.
Warning
Do not use this switch for secondary CT circuits.
Incorrect operation could be dangerous.

lustration	Description	Type	*Minimum quantity per order*
	Terminal block section with isolating switch	**LT4D-020Y**	100 pcs
	End barrier	**LT9D-E1**	50 pcs
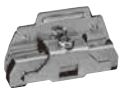	End clamp kit	**LT9E-T2**	50 pcs
	Mounting rail	**LT9E-R1**	1 pcs (1m)
	Marking strip sheet	**LT9D-M1**	1 sheets (900mm)

■ Ordering information

Specify the following:
1. Type number
2. Quantity: *Specify in minimum quantity or multiples of minimum quantity per order.*
   Examples: minimum quantity per order: 20 pcs. To order, 20 pcs, 40 pcs, 60 pcs, ..., 100 pcs, etc. Should be specified.

■ Technical data

Insulation resistance: Over 100M at 500V DC
Dielectric strength: 2500V AC rms. 1 minute
Ambient temperature: –20° to +60°C

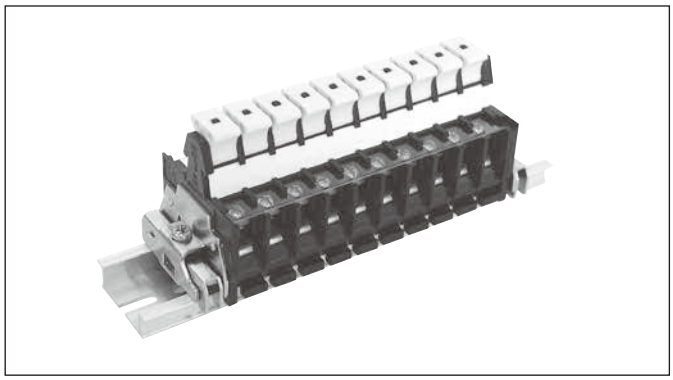

■ Dimensions, mm

• **Terminal block section LT4D**
mass: 50g

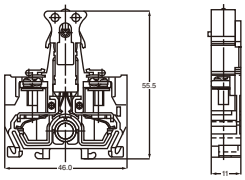

• **End barrier LT9D-E1**
mass: 5g

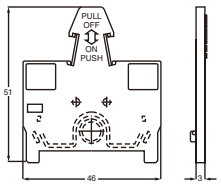

• **End clamp kit LT9E-T2**
mass: 12g

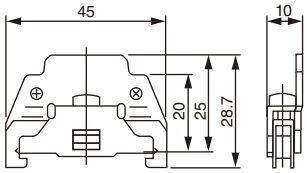

• **Mounting rail LT9E-R1**
mass: 200g

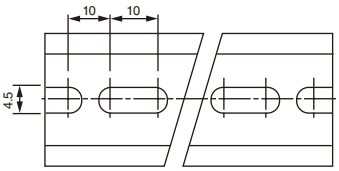

• **Marking strip sheet LT9D-M1**
mass: 2g

thickness :0.5mm

• **Assembled LT4D-020Y-□□**

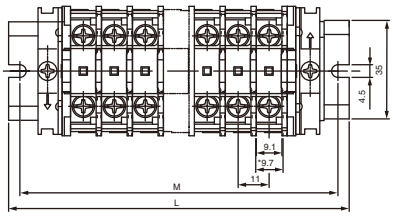

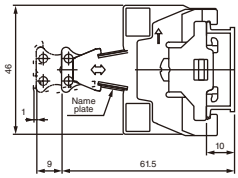

M: Mounting hole pitch
L : Full length

No.of poles	M	L	No.of poles	M	L
8	132	140	22	292	300
10	152	172	24	312	320
12	172	180	30	372	380
			40	492	500
14	192	200			
16	232	240	50	592	600
18	252	260	85	992	1000
	272	280			

Note: 1 to 85 poles can also be assembled except those listed above.

Fuji Electric FA Components & Systems Co., Ltd.
Information subject to change without notice

With transparent cover power terminal blocks

600 Volts 50 to 200 Amps
Wire size: 2 to 100 mm^2

- Transparent terminal cover allows the wiring configuration to be checked externally.
- Slotted hexagon head bolts that can be tightened with screwdrivers or box wrenches are used for the terminals.
- The line side and load side are provided with hinged terminal covers to ensure safety and allow easier maintenance and inspections.

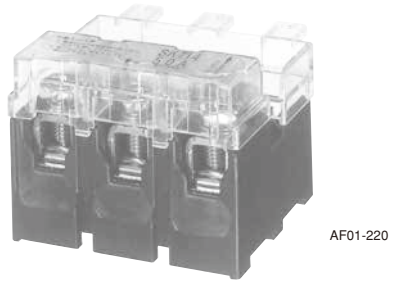

SKT14A-3C-J

■ Types and ratings

• Terminal blocks

Pole	Rated insulation voltage (V AC)	Rated continuous current (A)	Wire size (mm^2)	Type	Mass (g)
3	600	50	2 to 14	**SKT14A-3C-J**	300
		100	2 to 38	**SKT38A-3C-J**	310
		150	14 to 60	**SKT60A-3C-J**	450
		200	30 to 100	**SKT100A-3C-J**	730
3 + 1 (Earth terminal)	600	50	2 to 14	**SKT14A-3CG-J**	440
		100	2 to 38	**SKT38A-3CG-J**	450
		150	14 to 60	**SKT60A-3CG-J**	690
		200	30 to 100	**SKT100A-3CG-J**	1120

• Connectors

Rated voltage (V AC)	Rated continuous current (A)	Wire size (mm^2)	Type	Mass (g)
600	50	2 to 14	**SKT14-S-J**	52
	100	2 to 38	**SKT38-S-J**	55
	150	14 to 60	**SKT60-S-J**	80
	200	30 to 100	**SKT100-S-J**	135

■ Specifications

Insulation resistance	100M or more (500V DC megger)
Withstand voltage	2500V AC 1minute
Ambient temperature	-20 to +55C
Humidity	85%RH or less
Flammability	UL94V-2 (Cover), UL94V-0 (Frame)
Temperature rise	45K or less (JIS C 2811)

■ Ordering information

Specify the following:
1. Type number

■ Tightening torque

Type	Recommended tightening torque (N•m)		Cable pull-out (UL486A) min. force (N)	
	Line side	Load side	Min. cable	Max. cable
SKT14A-3C-J	5.1–6.5	11.5–15.5	222	400
SKT14A-3CG-J	(M6)	(M8)	(14AWG)	(8AWG)
SKT38A-3C-J	5.1–6.5	11.5–15.5	222	445
SKT38A-3CG-J	(M6)	(M8)	(14AWG)	(6AWG)
SKT60A-3C-J	11.5–15.5	11.5–15.5	311	623
SKT60A-3CG-J	(M8)	(M8)	(12AWG)	(4AWG)
SKT100A-3C-J	23–31	23–31	311	801
SKT100A-3CG-J	(M10)	(M10)	(12AWG)	(2AWG)

Type SKT-J

■ Dimensions, mm

• Terminal block

SKT14A-3C-J (Without earth terminal)
SKT14A-3CG-J (With earth terminal)

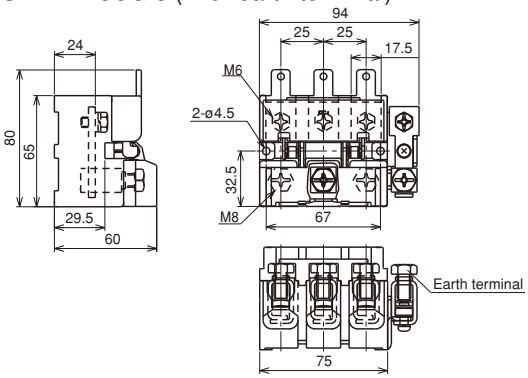

SKT38A-3C-J (Without earth terminal)
SKT38A-3CG-J (With earth terminal)

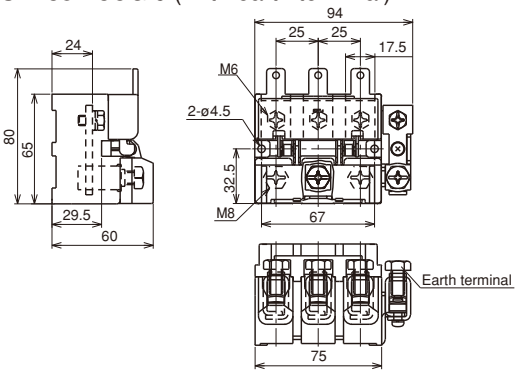

SKT60A-3C-J (Without earth terminal)
SKT60A-3CG-J (With earth terminal)

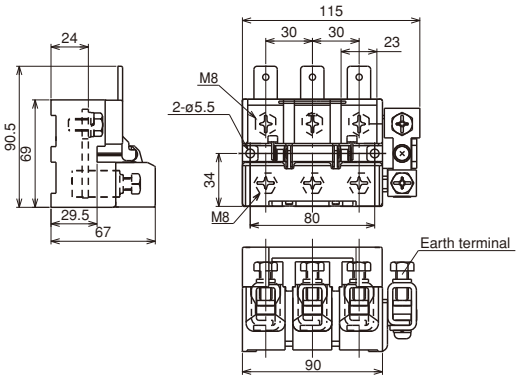

SKT100A-3C-J (Without earth terminal)
SKT100A-3CG-J (With earth terminal)

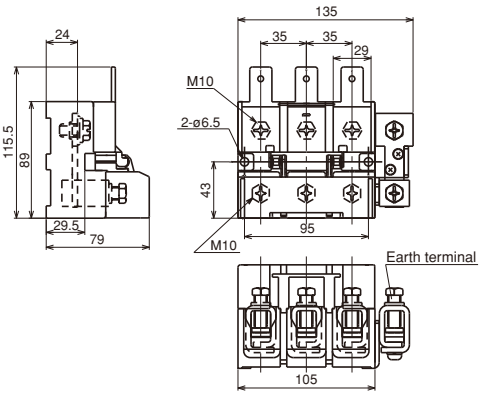

• Connector

SKT14-S-J

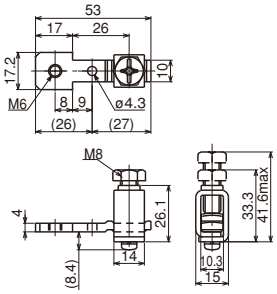

SKT38-S-J

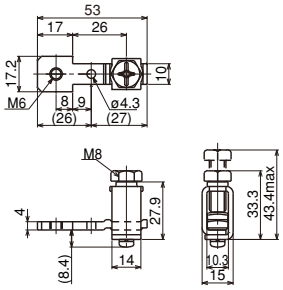

SKT60-S-J

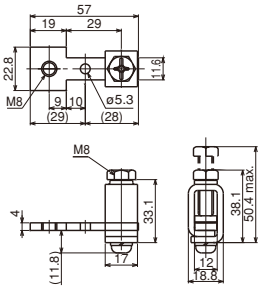

SKT100-S-J

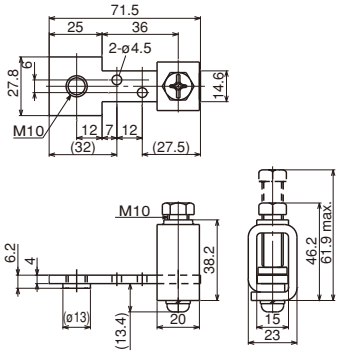

Fuji Electric FA Components & Systems Co., Ltd.
Information subject to change without notice

■ Features

- Any number of poles can be assembled on a 35mm DIN rail.
- A lineup of 10 models supporting screw sizes from M3.5 to M16 and a maximum current of 600A is available.
- Our standard models are approved by UL, CSA, and TÜV.
- The molded material conforms to the UL standard for self-extinguishing materials (UL94V-0).
- Mounting is performed by simply pressing the block down onto the rail (except for models LT2E-200 to 600).

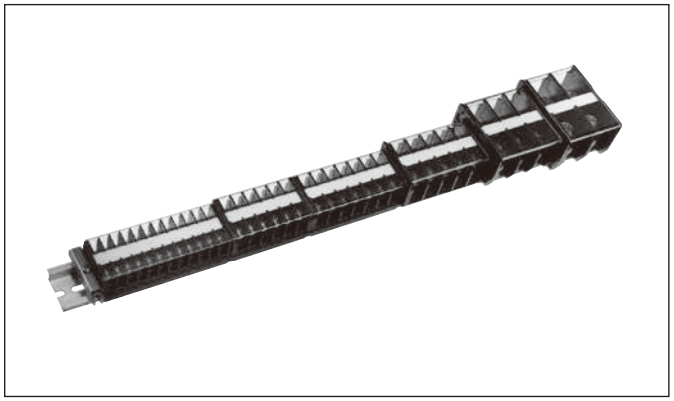

■ Specifications

Rated thermal current (A)	Terminal screw	Applicable wire size and maximum current	Terminal block	End barrier	Cover	Legend plate	End clamp	Rail
22	M3.5	1.25mm²-16A 2mm²-22A	**LT2E-020**	LT9E-E1	LT9E-C1	LT9E-M1	LT9E-T1	LT9E-R1 LT9E-R2
30	M4	1.25mm²-16A 2mm²-22A 3.5mm²-30A	**LT2E-030**	LT9E-E2	LT9E-C2			
40	M4	3.5mm²-30A 5.5mm²-40A	**LT2E-040**	LT9E-E3	LT9E-C2			
75	M5	5.5mm²-40A 8mm²-50A 14mm²-75A	**LT2E-080**	LT9E-E4	LT9E-C3			
95	M6	8mm²-50A 14mm²-75A 22mm²-95A	**LT2E-090**	LT9E-E5	LT9E-C4			
160	M8	22mm²-95A 38mm²-130A 60mm²-160A	**LT2E-150**	LT9E-E6	LT9E-C5			
200	M10	38mm²-130A 60mm²-160A 100mm²-200A	**LT2E-200**	LT9E-E7	LT9E-C6 (Standard provided)	LT9E-M3 (Standard provided)	LT9E-T2	
300	M10	60mm²-160A 100mm²-240A 150mm²-300A	**LT2E-300**	LT9E-E7	LT9E-C8 (Standard provided)			
400	M12	100mm²-240A 150mm²-310A 200mm²-400A	**LT2E-400**	LT9E-E7	LT9E-C10 (Standard provided)			
600	M16	150mm²-310A 200mm²-400A 325mm²-600A	**LT2E-600**	LT9E-E7	LT9E-C12 (Standard provided)			

Type LT2E

■ Performance

Rated insulation voltage	600V
Ambient operating conditions	Temperature -25 to 60˚C (with no icing or condensation) Relative humidity 45% to 85%
Temperature rise	Temperature rise in conducting metal is less than 35K.
Insulation resistance	200M between charged parts, and between charged parts and the metal mounting plate (Measured at 500V DC megger.)
Dielectric strength	2,500V AC (1 min)
Applicable standards	Conforms to JIS C 2811

■ Material

Main body	PPE (modified polyphenylene ether resin) (black) UL94V-0
Conductive plate	C2680R (Ni-plated)
Terminal screws	SWCH (Zn-plated)
Side panel	PPE (modified polyphenylene ether resin) (black) UL94V-0
Cover	PC (translucent polycarbonate resin) UL94V-0
Legend plate	PVC (white)

■ Dimensions, mm

● Terminal blocks

LT2E-020

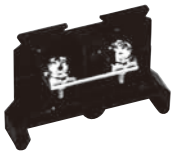

Sold in units of 100

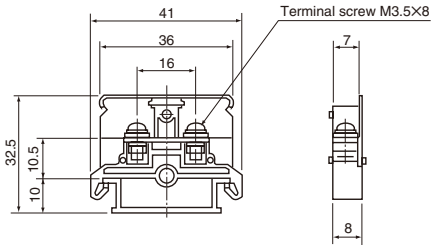

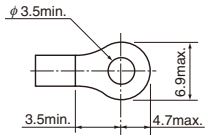

Applicable crimp terminal

LT2E-030

Sold in units of 100

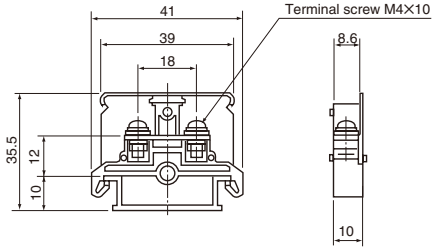

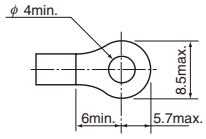

Applicable crimp terminal

LT2E-040

Sold in units of 100

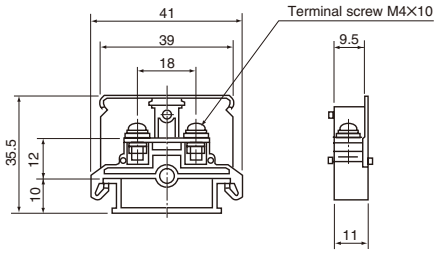

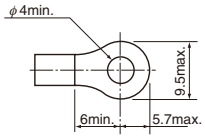

Applicable crimp terminal

LT2E-080

Sold in units of 50

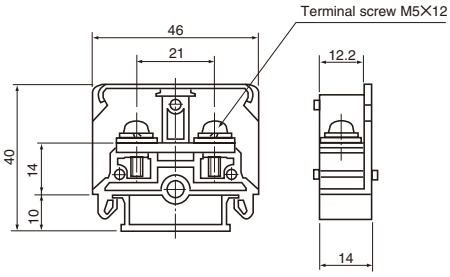

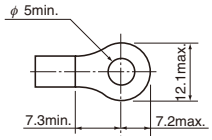

Applicable crimp terminal

Fuji Electric FA Components & Systems Co., Ltd.
Information subject to change without notice

● Terminal blocks

LT2E-090

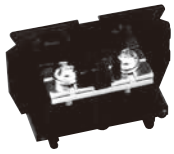

Sold in units of 20

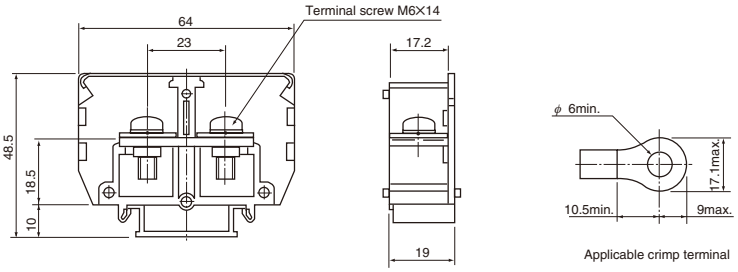

LT2E-150

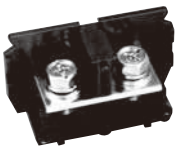

Sold in units of 10

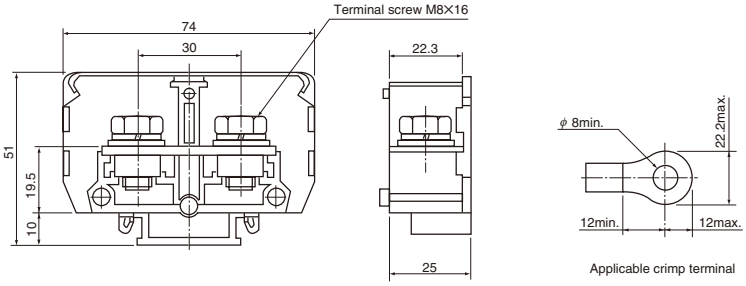

LT2E-200

Sold in units of 12
(Cover, supplied with a legend plate)

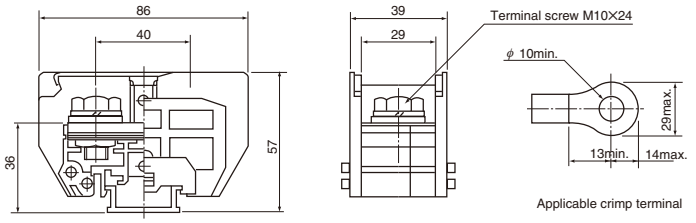

LT2E-300

Sold in units of 8
(Cover, supplied with a legend plate)

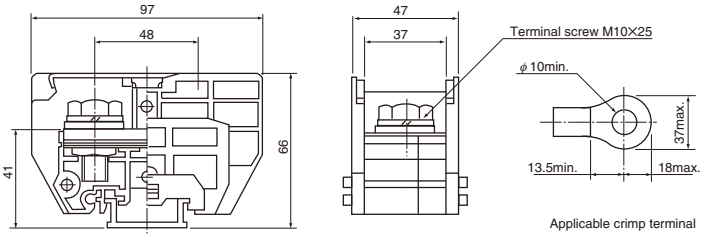

LT2E-400

Sold in units of 5
(Cover, supplied with a legend plate)

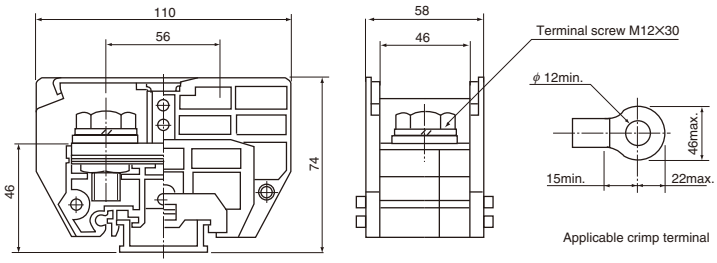

LT2E-600

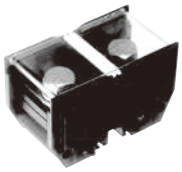

Sold in units of 3
(Cover, supplied with a legend plate)

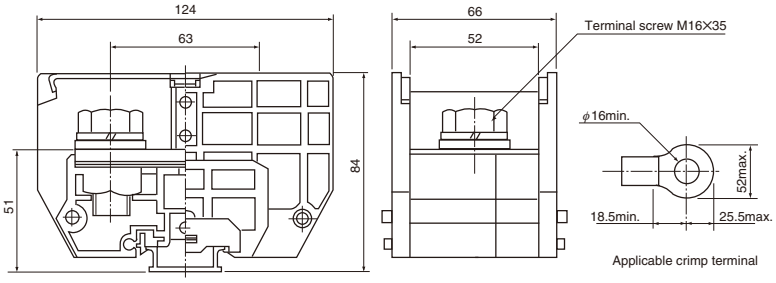

Type LT2E

● End barriers

LT9E-E1

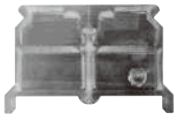

Sold in units of 100.

LT9E-E2

Sold in units of 100.

LT9E-E3

Sold in units of 100.

LT9E-E4

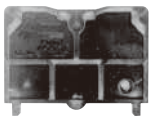

Sold in units of 50.

LT9E-E5

Sold in units of 20.

LT9E-E6

Sold in units of 10.

LT9E-E7

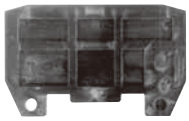

Sold in units of 1.

C1

● Covers

LT9E-C1

Length: 1m
Sold in units of 20.

LT9E-C2

Length: 1m
Sold in units of 20.

LT9E-C3

Length: 1m
Sold in units of 20.

LT9E-C4

Length: 1m
Sold in units of 20.

LT9E-C5

Length: 1m
Sold in units of 20.

LT9E-C6
Standard cover
(Standard provided)

Sold in units of 1.

LT9E-C8
Standard cover
(Standard provided)

Sold in units of 1.

LT9E-C10
Standard cover
(Standard provided)

Sold in units of 1.

LT9E-C12
Standard cover
(Standard provided)

Sold in units of 1.

● Legend plates

LT9E-M1
Material: PVC

Dimensions
(0.5t×10W×1200L)
Sold in units of 50

LT9E-M3
Material: PVC

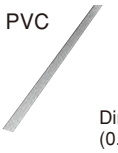

Dimensions
(0.5t×12W×900L)
Sold in units of 50

● End clamps

LT9E-T1

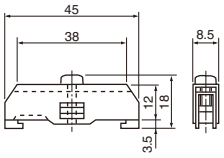

Sold in units of 100.

LT9E-T2

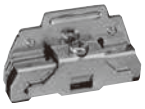

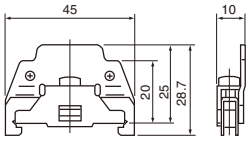

Sold in units of 100.

● Mounting rails

LT9E-R1
LT9E-R2

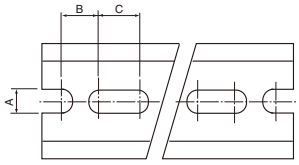

Material: aluminum A6063

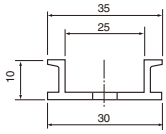

Type	A	B	C	Length	Sold in units
LT9E-R1	4.5	10	10	1000mm	100
LT9E-R2				2000mm	50

■ Application to products satisfying international standards

Dielectric strength: 2,200V AC for 1 min.
Operating temperature range: -25 to 60˚C

Type	Standard		Rated insulation voltage (V)	Rated continuous current (A)	Applicable wire size for stranded wires (AWG)	International standards
LT2E-020	UL	E45457	600	20	20–14	UL approved
	CSA	109308-M-001		20	20–14	CSA approved
	TÜV	R9551146		22	20–14	TÜV approved
LT2E-030	UL	E45457	600	30	18–12	
	CSA	109308-M-001		30	18–12	
	TÜV	R9551147		30	18–12	
LT2E-040	UL	E45457	600	40	18–10	
	CSA	109308-M-001		40	18–10	
	TÜV	R9551148		40	18–10	
LT2E-080	UL	E45457	600	75	10–6	
	CSA	109308-M-001		75	10–6	
	TÜV	J9551159		75	12–6	
LT2E-090	UL	E45457	600	95	8–4	
	CSA	109308-M-001		95	8–4	
	TÜV	J9551160		95	10–4	
LT2E-150	UL	E45457	600	150	4–2/0	
	CSA	109308-M-001		150	4–2/0	
	TÜV	J9551161		160	6–2/0	
LT2E-200	UL	E45457	600	200	2–4/0	
	CSA	109308-M-001		200	2–4/0	
	TÜV	J9551162	660	200	2–250	
LT2E-300	UL	E45457	600	300	2/0–300	
	CSA	109308-M-001		300	2/0–300	
	TÜV	J9551163	660	300	1/0–300	
LT2E-400	UL	E45457	600	400	4/0–350	
	CSA	109308-M-001		400	4/0–350	
	TÜV	J9551164	660	400	3/0–500	
LT2E-600	UL	E45457	600	550	300–600	
	CSA	109308-M-001		550	300–600	
	TÜV	J9551165	660	600	250–600	

Note: The values in the above table are for when strandard wires and crimp terminals are used for connection. Use the terminal block together with the crimp terminals and wires approved for the desired standard.

Type LT5

Testing terminals for VT, CT circuit – For panel mounting

250 Volts AC or DC, 30 Amps
Wire size: Maximum 8 mm^2

These terminals are used in VT and CT secondary circuits.
These are used to test protective relays or meters or for carrying out calibration.

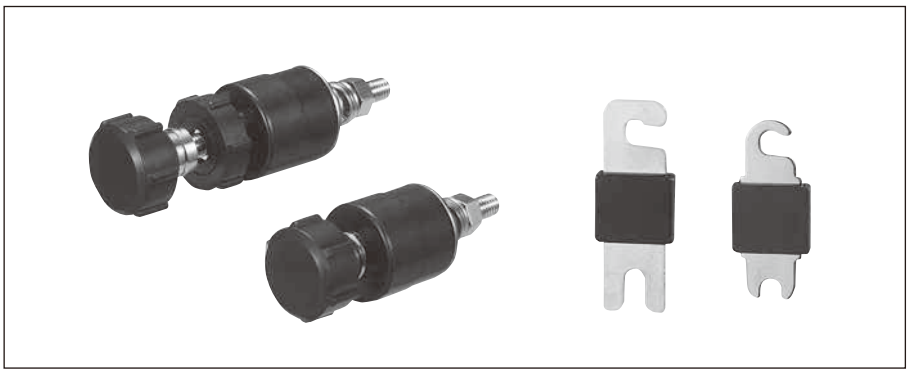

■ Ordering information

Specify the following:
1. Ordering code or type number
2. Quantity: One pack (10 pcs) is minimum.

■ Technical data

Insulation resistance: Over 100MΩ at 500V DC
Dielectric strength: 2000V AC rms. 1 minute
Ambient temperature: –25° to +50°C

Illustration	Description	Etched letters (Standard)	Type
SDO-0095M	VT circuit Black	U V W O –	**LT5S-B2** **LT5S-B3** **LT5S-B4** **LT5S-B1** **LT5S-B**
SB-260	CT circuit Black	R S T O –	**LT5D-B5** **LT5D-B6** **LT5D-B7** **LT5D-B1** **LT5D-B**
Q-482	Link, black		**LT95S-B1**
SDO-0099M	Link, black (small type)		**LT95S-B2**

■ Applications

VT circuit

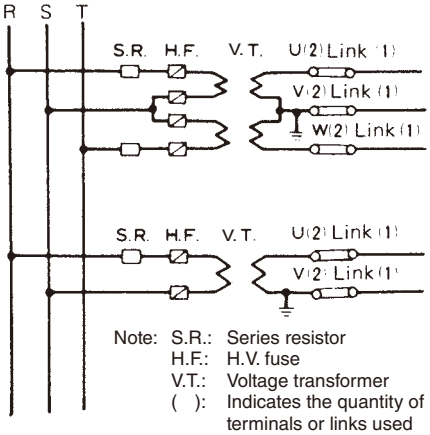

Note: S.R.: Series resistor
H.F.: H.V. fuse
V.T.: Voltage transformer
( ): Indicates the quantity of terminals or links used at this circuit.

CT circuit

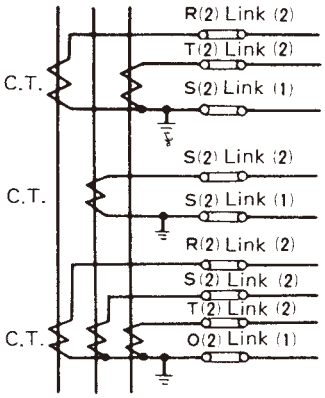

Note: C.T.: Current transformer
( ): Indicates the quantity of terminals or links used at this circuit.

■ Dimensions, mm

LT5S – for VT circuits Mass: 30g

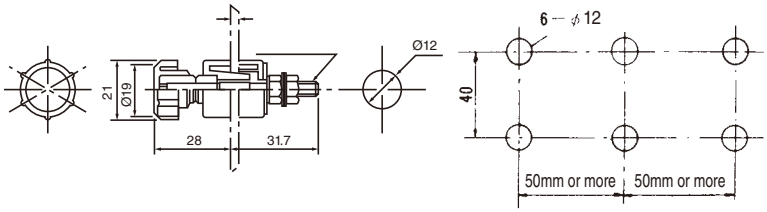

LT5D – for CT circuits Mass: 50g

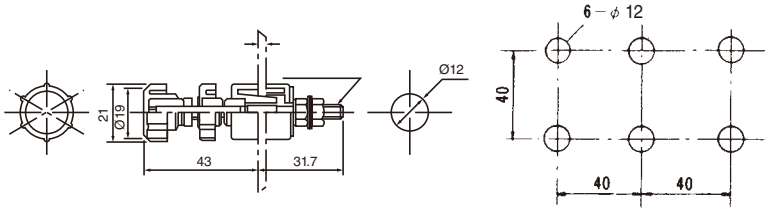

LT95S – Link
Mass: 10g

LT95S – B1

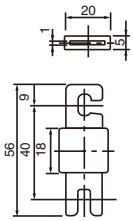

LT95S – B2

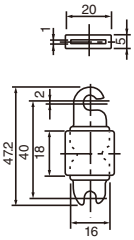

Fuji Electric FA Components & Systems Co., Ltd.
Information subject to change without notice

■ CCC approved

• AR22/DR22 and AD30/DR30 series

Pushbutton switches

Bezel	Operator	Type			
		AR22		AR30	
		Momentary action	Alternate action (Turn-reset for V5R)	Momentary action	Alternate action (Turn-reset for V5R)
Round bezel	Flush round head	AR22F0R	AR22F5R	AR30F0R	AR30F5R
	Extended round head	AR22E0R	AR22E5R	AR30E0R	AR30E5R
	Flush round head (symbol mark type)	AR22FAR	AR22FBR	AR30FAR	AR30FBR
	Extended round head (symbol mark type)	AR22EAR	AR22EBR	AR30EAR	AR30EBR
	Extended with half guard	AR22G0R	AR22G5R	AR30G0R	AR30G5R
	Extended with full guard (24mm dia.)	AR22G3R	AR22G8R	AR30G1R	AR30G6R
	Flush with full guard (24mm dia.)	AR22G2R	–	–	–
	Mushroom head with full guard (40mm dia.)	AR22M3R	–	AR30M3R	AR30M8R
	Mushroom head with full guard (35mm dia. metal nut)	–	–	AR30GSR	–
	Mushroom head (29mm dia.)	AR22M4R	AR22M9R	AR30M4R	–
	Mushroom head (40mm dia.)	AR22M0R	AR22M5R	AR30M0R	AR30M5R
	Giant head	–	–	AR30B0R	–
	Giant head with guard	–	–	AR30B1R	–
	Giant head with full guard	–	–	AR30B2R	–
	Giant head with full guard	–	–	AR30B3R	–
	Push-lock, turn-reset (40mm dia, with white arrow)	–	AR22V5R	–	AR30V5R
Square bezel	Flush square head	AR22F0S	AR22F5S	–	–
	Extended square head	AR22E0S	AR22E5S	–	–
	Flush round head	AR22F0Y	AR22F5Y	–	–
	Extended round head	AR22E0Y	AR22E5Y	–	–
	Mushroom head	AR22M4Y	–	–	–
Certificate No.		2003010305063372		2003010305063384	

Note: Certified contact of AR22 type: Momentary action: within 6 contacts
Alternate action : within 4 contacts
Certified contact of AR30 type: Momentary action: within 8 contacts
Alternate action : within 4 contacts

Ring selection type pushbutton switches

Bezel	Operator	Type	
		AR22	AR30
Round bezel	With selector ring	AR22S1R	AR30S1R
		AR22S2R	AR30S2R
		AR22S3R	AR30S3R
		AR22S6R	AR30S6R
Certificate No.		2003010305063372	2003010305063384

Note: Certified contact: 2NO+2NC (S2R: 2NO is also certified)

Emergency stop pushbutton switches

Bezel	Operator	Type			
		AR22		AR30	
		Soft-touch	Standard	Soft-touch	Standard
Round bezel	Push-lock, turn-reset (29mm dia.)	AR22VSR	AR22V4R	–	–
	Push-lock, turn-reset (40mm dia.)	AR22V0R	AR22V2R	AR30V0R	AR30V2R
	Push-lock, turn-reset (65mm dia.)	–	–	AR30V1R	–
	Key-release push-lock, turn-reset (40mm dia.)	–	AR22V7R	–	–
	Push-look, pull-reset (35mm dia.)	–	AR22Q2R	–	AR30Q2R
	Unibody push-lock, turn-reset (40mm dia.)	AR22VGE	–	–	–
	Push-lock, turn-reset or pull-reset (40mm dia.)	–	AR22VQR	–	–
	Push-lock, turn-reset (65mm dia.)	–	AR22VPR	–	–
	Push-lock, turn-reset (44mm dia.)	–	–	–	AR30VPR
Certificate No.		2003010305063372 (except for AR22VGE, AR22VQR, AR22VPR) 2005010305156646 (for AR22VGE) 2013010305647311 (for AR22VQR, AR22VPR)		2003010305063384 (except for AR30VPR) 202010305647310 (for AR30VPR)	

Notes: • Certified contact: 1NC, 1NO+1NC, 2NC, 3NC, 2NO+2NC, 4NC (except for Q2R, VGE type)
• Certified contact of Q2R, VGE type: 1NC, 1NO+1NC and 2NC only
• Certified button color: red (R) only

Illuminated pushbutton switches

Bezel	Operator	Type			
		AR22		AR30	
		Momentary	Alternate	Momentary	Alternate
Round bezel	Flush round head	AR22F0L	AR22F5L	–	–
	Extended round head	AR22E0L	AR22E5L	AR30E0L	AR30E5L
	Mushroom head (29mm dia.)	AR22M4L	AR22M9L	–	–
	Mushroom head (40mm dia.)	AR22M0L	AR22M5L	–	–
	Extended with transparent full guard (24mm dia.)	AR22G4L	AR22G9L	AR30G4L	AR30G9L
	Extended with full guard (24mm dia. with openings)	AR22G2L	AR22G7L	AR30G2L	AR30G7L
	Extended with full guard (24mm dia.)	AR22G1L	AR22G6L	AR30G3L	AR30G8L
	Push-lock, turn-reset (40mm dia. with white arrow)	–	–	–	AR30V5L
Square bezel	Flush square head	AR22F0M	AR22F5M	–	–
	Extended square head	AR22E0M	AR22E5M	–	–
	Flush round head	AR22F0P	AR22F5P	–	–
	Extended round head	AR22E0P	AR22E5P	–	–
	Mushroom head	AR22M4P	–	–	–
Certificate No.		2003010305063372		2003010305063384	
Specifications		· Contact Without transformer Momentary action: within 5 contacts Alternate action: within 3 contacts With transformer Momentary action: within 3 contacts Alternate action: within 2 contacts		· Contact Without transformer Momentary action: within 6 contacts Alternate action: within 3 contacts With transformer Momentary action: within 4 contacts Alternate action: within 2 contacts	
		· Color of button Green, red, white, yellow, orange, blue · Light source LED lamp, incandescent lamp · Operating voltage of lamp Without transformer LED: 6V AC, 6V DC, 12V AC/DC Incandescent lamp: 5.5V AC/DC, 20V AC/DC LED, incandescent lamp: 15V AC/DC, 24V AC/DC With transformer LED, incandescent lamp: 100-110V AC, 115-127V AC, 200-220V AC, 230-254V AC, 350-380V AC, 400-440V AC, 480V AC, 500-550V AC			

Emergency stop illuminated pushbutton switches

Bezel	Operator	Type			
		AR22		AR30	
		Soft-touch	Standard	Soft-touch	Standard
Round bezel	Push-lock, turn-reset (29mm dia.)	AR22VSL	–	–	–
	Push-lock, turn-reset (40mm dia.)	AR22V0L	AR22V2L	AR30V0L	AR30V2L
	Push-lock, turn-reset (40mm dia. transparent in all colors)	AR22VDL	AR22VAL	–	–
	Unibody push-lock, turn-reset (40mm dia.)	AR22VGF	–	–	–
	Push-lock, turn-reset or pull-reset (40mm dia.)	–	AR22VQL	–	–
	Push-lock, turn-reset (44mm dia.)	–	–	–	AR30VPL
Certificate No.		2003010305063372 (except for AR22VGF, AR22VQL) 2005010305156646 (for AR22VGF) 2013010305647311 (for AR22VQL)		2003010305063384 (except for AR30VPL) 2013010305647310 (for AR30VPL)	

Notes: • Certified contact without transformer: 1NC, 1NO+1NC, 2NC, 3NC (except for VGF type)
• Certified contact with transformer: 1NC, 1NO+1NC, 2NC (except for VGF type)
• Certified contact of VGF type: 1NC, 1NO+1NC and 2NC only,
• Certified lamp voltage of VGF type: LED lamp: 24V AC/DC, neon lamp: 110, 120, 220, 240V AC
• Certified button color: red (R) only

Selector switches

Bezel	Operator	Type			
		AR22		AR30	
		Standard type	Control type	Standard type	Control type
Round bezel	Knob	AR22PR	AR22PCR	AR30PR	AR30PCR
	Lever	AR22WR	AR22WCR	AR30WR	AR30WCR
	Cylindrical knob	AR22RR	AR22RCR	–	–
	Key	AR22JR	AR22JCR	AR30JR	AR30JCR
	Key (long durability)	AR22JAR	–	AR30JAR	–
Square bezel	Knob	AR22PY	AR22PCY	–	–
	Lever	AR22WY	AR22WCY	–	–
	Cylindrical knob	AR22RY	AR22RCY	–	–
	Key	AR22JY	AR22JCY	–	–
Certificate No.		2003010305063372		2003010305063384	

Note: Certified contact of AR22 type: Mainted: within 6 conrtacts
Control type, spring return and spring / manurl return: within 4 contacts
Certified contact of AR30 type: Momentary action: within 8 conrtacts
Control type, spring return and spring / manurl return: within 4 contacts

Illuminated selector switches

Bezel	Operator	Type	
		AR22	AR30
		Standard type	Standard type
Round bezel	Knob	AR22PL	AR30PL
Square bezel	Knob	AR22PP	–
Certificate No.		2003010305063372	2003010305063384

Notes: • Certified contact of AR22 type :
Without transformer
Maintained : within 4 contacts
Spring return and spring / manual return: within 3 contacts
With transformer
Maintained : within 3 contacts
Spring return and spring / manual return: within 2 contacts

• Certified contact of AR30 type :
Without transformer
Maintained : within 6 contacts
Spring return and spring / manual return: within 3 contacts
With transformer
Maintained : within 4 contacts
Spring return and spring / manual return: within 2 contacts

Pilot lights

Bezel	Lens	Type	
		DR22	DR30
Round bezel	Dome	DR22D0L	DR30D0L
	Extended round	DR22E3L	DR30E3L
	Faceted	DR22K0L	DR30K0L
Square bezel	Flush square	DR22F3M	–
	Flush square (Transparent lens)	DR22F4M	DR30F4M
	Flush square (12mm high frame)	DR22F5M	–
	Extended square	DR22E3M	–
	Flush rectangular	DR22E3N	–
	Flush rectangular (Transparent lens)	–	DR30F4N
	Flush square large type (Transparent lens)	–	DR30M4M
	Extended round	DR22E3P	–
Certificate No.		2008010305063383	2003010305063487

Notes: • Certified lamp: both LED and incandescent lamp
• Certified transformer type: standard and short-body
• Except for with resistor/resistor unit

Item with degree of protection IP2X (IP20)

Type	Certificate No.
AR22□ZB	2003010305063372
AR30□ZB	2003010305063384
DR22□ZB	2003010305063383
DR30□ZB	2003010305063487

Notes: • Certified for all types listed on the table in page C1-289 to C1-291 except for unibody push-lock, turn-reset (40mm dia.) types of emergency stop illuminated pushbutton switches and short-body transformer of pilot light.
• The terminal section of standard emergency stop illuminated pushbutton switches has degree of protection, IP2X.

CCC approved

• AR/DR16, AF/DF16 series

Illuminated pushbutton switches

Operator	Type			
	AR16		AF16	
	Momentary	Alternate	Momentary	Alternate
Flush rectangular	AR16F0N	AR16F5N	AF16F0N	AF16F5N
Flush rectangular with guard	AR16G0N	AR16G5N	–	–
Flush square	AR16F0M	AR16F5M	AF16F0M	AF16F5M
Extended round	AR16E0L	AR16E5L	–	–
Flush round	–	–	AF16F0L	AF16F5L
Certificate No.	2013010305590653			
Specifications Certified in the content on the right.	・Certified contact Momentary: SPDT, 2PDT Alternate: SPDT, 2PDT ・Certified button color: Colors within the production range of each model ・Certified lamp: LED lamp ・Certified operating lamp voltage: Color within production range			

Pushbutton switches

Operator	Type			
	AR16		AF16	
	Momentary	Alternate	Momentary	Alternate
Flush rectangular	AR16F0T	AR16F5T	AF16F0T	AF16F5T
Flush rectangular with guard	AR16G0T	AR16G5T	–	–
Flush square	AR16F0S	AR16F5S	AF16F0S	AF16F5S
Extended round	AR16E0R	AR16E5R	–	–
Flush round	–	–	AF16F0R	AF16F5R
Certificate No.	2013010305590653			
Specifications Certified in the content on the right.	・Certified contact Momentary: SPDT, 2PDT Alternate: SPDT, 2PDT ・Certified button color: Colors within the production range of each model			

Selector switches

Operator	Type	
	AR16	AF16
Knob with rectangular bezel	AR16PT	AF16PT
Knob with square bezel	AR16PS	AF16PS
Knob with round bezel	AR16PR	AF16PR
Key with rectangular bezel	AR16JT	AF16JT
Key with square bezel	AR16JS	AF16JS
Key with round bezel	AR16JR	AF16JR
Certificate No.	2013010305590653	
Specifications Certified in the content on the right.	・Certified contact: SPDT, 2PDT ・No. of positions and operator action: No. of positions and operator action within production range of each model ・Color of knob: Colors within the production range of each model ・Types of key: A, B, C, D, E, F ・Key removable position: Position within the production range of each model	

Emergency stop pushbutton switches

Operator	Type
Push-lock (32mm dia)	AR16V0R
Push-lock (40mm dia)	AR16V1R
Certificate No.	2003010305071068
Specifications Certified in the content on the right.	・Certified contact: 1NC, 1NO+1NC, 2NC, 1NO+2NC, 3NC, 1NO+3NC, 4NC ・Certified button color: red (R) only

Emergency stop illuminated pushbutton switches

Operator	Type
Push-lock (32mm dia)	AR16V0L
Push-lock (40mm dia)	AR16V1L
Certificate No.	2003010305071068
Specifications Certified in the content on the right.	・Certified contact: 1NC, 1NO+1NC, 2NC, 1NO+2NC, 3NC, 1NO+3NC, 4NC ・Certified button color: red (R) only ・Certified lamp: LED lamp ・Certified operating lamp voltage: Voltage within production range

• **AH164, 165, 165-2 series**

Pushbutton switches

Operator	Type					
	AH164		AH165		AH165-2	
	Momentary action	Alternate action	Momentary action	Alternate action (Turn-reset for V, V1)	Momentary action	Alternate action (Turn-reset for 2V, 2YV)
Flush round head	–	–	–	–	AH165-2F	AH165-2F5
Extended round head	AH164-E	AH164-E5	AH165-E	AH165-E5	AH165-2E	AH165-2E5
Extended square head	–	–	–	–	AH165-2SE	AH165-2SE5
Extended square concave head	–	–	–	–	AH165-2SCE	AH165-2SCE5
Flush square head	AH164-SF	AH164-SF5	AH165-SF	AH165-SF5	AH165-2SF	AH165-2SF5
Flush rectangular head	AH164-TF	AH164-TF5	AH165-TF	AH165-TF5	–	–
Flush square head with guard	AH164-SGF	AH164-SGF5	AH165-SGF	AH165-SGF5	–	–
Flush rectangular head with guard	AH164-TGF	AH164-TGF5	AH165-TGF	AH165-TGF5	–	–
Mushroom head (round bezel)	–	–	–	–	AH165-2M	–
Mushroom head (square bezel)	–	–	–	–	AH165-2YM	–
Mushroom head	AH164-M	AH164-M5	AH165-M	AH165-M5	–	–
Convex square head	AH164-SM	AH164-SM5	AH165-SM	AH165-SM5	–	–
Convex rectangular head	AH164-TM	AH164-TM5	AH165-TM	AH165-TM5	–	–
Push-locked (round bezel)	–	–	–	AH165-V	–	AH165-2V
Push-locked large type	–	–	–	AH165-V1	–	–
Push-locked (square bezel)	–	–	–	–	–	AH165-2YV
Certificate No.	2003010305071068					

Notes: • Certified contact: 1NO+1NC, 2NO+2NC, 3NO+3NC. AH165-V and -V1: 1NC and 2NC only.
• Certified button color: all in manufactured range of corresponding type. AH165-V and -V1: red (R) only.
• Certified terminal shape: for soldering and tab, and for wrapping. AH165-V and -V1: soldering and tab only.

Ring selection type pushbutton switches

Operator	Type
	AH165-2
With selector ring (round bezel)	AH165-2S2
With selector ring (square bezel)	AH165-2YS2
Certificate No.	2003010305071068

Note: Certified contact: 2NO+2NC

Emergency stop pushbutton switches

Operator	Type
	AH165
Push-lock, turn-reset (ø32)	AH165-V5
Push-lock, turn-reset (ø40)	AH165-V6
Certificate No.	2003010305071068

Notes: • Certified contact: 1NC and 2NC only
• Certified button color: red (R) only
• Certified terminal shape: soldering and tab only

CCC approved

Illuminated pushbutton switches

Operator	Type					
	AH164		AH165		AH165-2	
	Momentary action	Alternate action	Momentary action	Alternate action	Momentary action	Alternate action (Turn-reset for 2VL, 2YVL)
Flush round head	–	–	–	–	AH165-2FL	AH165-2FL5
Extended round head	AH164-L	AH164-L5	AH165-L	AH165-L5	AH165-2EL	AH165-2EL5
Extended square head	–	–	–	–	AH165-2SEL	AH165-2SEL5
Concave square head	–	–	–	–	AH165-2SCL	AH165-2SCL5
Flush square head	AH164-SL	AH164-SL5	AH165-SL	AH165-SL5	AH165-2SFL	AH165-2SFL5
Flush rectangular head	AH164-TL	AH164-TL5	AH165-TL	AH165-TL5	–	–
Flush square head with guard	AH164-SGL	AH164-SGL5	AH165-SGL	AH165-SGL5	–	–
Flush rectangular head with guard	AH164-TGL	AH164-TGL5	AH165-TGL	AH165-TGL5	–	–
Mushroom head (round bezel)	–	–	–	–	AH165-2ML	–
Mushroom head (square bezel)	–	–	–	–	AH165-2YML	–
Push-locked (round bezel)	–	–	–	–	–	AH165-2VL
Push-locked (square bezel)	–	–	–	–	–	AH165-2YVL
Certificate No.	2003010305071068					

Notes: • Certified contact: 1NO+1NC, 2NO+2NC, 3NO+3NC
• Certified terminal shape: for soldering and tab, and for wrapping.
• Certified lamp: LED, incandescent lamp and neon
• Certified operating lamp voltage: 6, 12 and 24V DC (LED)/ 5, 12, 15 and 24V AC/DC (incandescent lamp) / 110, 120, 220 and 240V AC (neon) /110, 220V AC (LED and incandesent lamps with transformer)
• The spot LED type have not been approved.

Selector switches (Standard)

Operator	Type		
	AH164	AH165	AH165-2
Knob (round bezel)	–	–	AH165-2P
Knob (rectangular bezel)	AH164-P	AH165-P	–
Knob (square bezel)	AH164-SP	AH165-SP	AH165-2YP
Key (round bezel)	–	–	AH165-2J
Key (rectangular bezel)	AH164-J	AH165-J	–
Key (square bezel)	AH164-SJ	AH165-SJ	AH165-2YJ
Key, 45-degree notch (rectangular bezel)	AH164-JK	AH165-JK	–
Certificate No.	2003010305071068		

Notes: • Certified contact: 1NO+1NC, 2NO+2NC, 3NO+3NC
• Certified terminal shape: for soldering and tab, and for wrapping

Selector switches (Direct opening action)

Operator	Type
Key (rectangular bezel)	AH165-JM2
Key (round bezel)	AH165-RJM2
Certificate No.	2003010305071068

Notes: • Certified contact: 1NO+1NC, 2NO+2NC
• Certified position quantity: 2-position only.
Certified returning method: maintained only.

Illuminated selector switches

Operator	Type
knob (round bezel)	AH165-2PL
Certificate No.	2003010305071068

Notes: • Certified contact: 1NO+1NC, 2NO+2NC
• Certified operating lamp voltage: 6, 12 and 24V DC (LED)/ 5, 12, 15 and 24V AC/DC (incandescent lamp)

Pilot lights

Lens	Type		
	AH164	AH165	AH165-2
Flush round	–	–	AH165-2Z
Extended round	AH164-Z	AH165-Z	AH165-2ZE
Extended square	–	–	AH165-2SZE
Flush square	AH164-ZS	AH165-ZS	AH165-2SZ
Flush rectangular	AH164-ZT	AH165-ZT	–
Certificate No.	2003010305071044		

Notes: • Certified lamp: LED, incandescent lamp and neon
• Certified operating lamp voltage: 110, 120, 220 and 240V AC (neon) /110, 220V AC (LED and incandesent lamps with transformer)
• The spot LED type have not been approved.

Industrial Relays
Industrial Control Relays
Time Delay Relays

Page

Industrial Relays

SH series
- General information C2-1
- Optional units C2-2
- Standard type C2-3
- DC-operated type C2-6
- UL and CSA approved C2-8
- TÜV and CCC approved C2-9
- Off-delay release type C2-10
- Mechanical latch type C2-11
- With extra pick-up operating coil C2-13
- With quick terminals C2-14

Industrial Control Relays

Card relays RB104,105 ..... C2-15
Relays-and-terminal module C2-16
Miniature control relays HH52, HH53, HH54 ..... C2-25
Miniature power relays HH62, HH63, HH64 ..... C2-37
General purpose relays HH22, HH23, HH24 ..... C2-41

Annunciator Relay Units

RV, JH13PN-Flicker relays C2-46

Time Delay Relays

General information C2-49
Ordering code system C2-50
Selection guide C2-51
Super Timers
- MS4S series C2-52
- ST7P, 7B C2-60

MINIMUM ORDERS

Orders amounting to **less than ¥10,000** net per order will be charged as ¥10,000 net per order plus freight and other charges.

WEIGHTS AND DIMENSIONS

Weights and dimensions appearing in this catalog are the best information available at the time of going to press. FUJI ELECTRIC FA has a policy of continuous product improvement, and design changes may make this information out of date.
Please confirm such details before planning actual construction.

INFORMATION IN THIS CATALOG IS SUBJECT TO CHANGE WITHOUT NOTICE.

Bifurcated contacts with excellent electrical conductivity/SH-4, SH-5

■ Description

SH series industrial relays are designed to increase contact reliability and make them easy to use.
The relays' highly reliable, bifurcated contacts allow them to be used in low-level circuits of 5V, 3mA.
Various optional function units such as auxiliary contact blocks, coil surge suppression units can be added to the relays, allowing fast and field modification.

KKD06-067
SH-4/4-pole

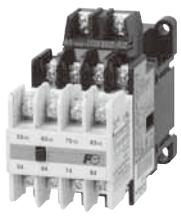
KKD06-038
SH-4/8-pole

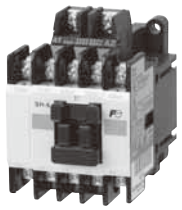
KKD06-039
SH-5/5-pole

■ Types and ratings

Type	SH-4					SH-5
Pole (No.of contacts)	4		8			5
Contact arrangement	4NO, 3NO+1NC, 2NO+2NC		8NO, 7NO+1NC, 6NO+2NC 5NO+3NC, 4NO+4NC			5NO, 4NO+1NC, 3NO+2NC 2NO+3NC, 1NO+4NC, 5NC
Thermal current (A)	10		10			10
Rated operational current (A)	Volts	AC-15 (ind.)	AC-12 (res.)	Volts	DC-13 (ind.)	DC-12 (res.)
	110V AC	6	10	24V DC	3	5
	220V AC	3	8	48V DC	1.5	3
	440V AC	1.5	5	110V DC	0.55	2.5
	550V AC	1.2	5	220V DC	0.27	1
Standard operating coil voltage	100V 50Hz/100–110V 60Hz, 200V 50Hz/200–220V 60Hz, 380V–400V 50Hz/400–440V 60Hz					
Mechanical durability Electrical durability (AC-15)	10 million operations 500,000 operations (at operational current)					
Operating cycles per hour	1,800					
Ambient temperature	-5 to +50°C					

■ Ordering code system

S H 04 A A-1 22
① ② ③④ ⑤ ⑥ ⑦ ⑧⑨

① Product category

Description	Code
Industrial relay	S

② Series category

Description	Code
SH series	H

③④ Frame size

Frame size	Code	
	3	4
SH-4	0	4
SH-5	0	5

⑤ Version

Description	Code
Standard	A

⑥ Coil/contact specification

Description	Code
Standard	
AC operated	A
DC operated	G
With extra pick-up coil	U
Mechanical latch	
AC operated	V
DC operated	D
With single-button contact	H

⑦ Coil voltage

Coil voltage	Code
24V 50Hz/24-26V 60Hz	E
48V 50Hz/48-52V 60Hz	F
100V 50Hz/100-110V 60Hz	1
100-110V 50Hz/110-120V 60Hz	H
110-120V 50Hz/120-130V 60Hz	K
200V 50Hz/200-220V 60Hz	2
200-220V 50Hz/220-240V 60Hz	M
220-240V 50Hz/240-260V 60Hz	P
346-380V 50Hz/380-420V 60Hz	S
380-400V 50Hz/400-440V 60Hz	4
415-440V 50Hz/440-480V 60Hz	T
480-500V 50Hz/500-550V 60Hz	5
24V DC	E
48V DC	F
100V DC	1
110V DC	H
200V DC	2
220V DC	M

⑧⑨ Contact arrangement

Contact arrangement	Code	
	⑧	⑨
4NO	4	0
3NO+1NC	3	1
2NO+2NC	2	2
8NO	8	0
7NO+1NC	7	1
6NO+2NC	6	2
5NO+3NC	5	3
4NO+4NC	4	4
5NO	5	0
4NO+1NC	4	1
3NO+2NC	3	2
2NO+3NC	2	3
1NO+4NC	1	4
5NC	0	5

Industrial Relays
SH series General information

■ Optional units

● Front mounting

Auxiliary contact block
2 or 4-pole
Highly reliable bifurcated contact can be used in low-level circuit of 5V, 3mA.

Terminal cover
The relay can easily be fitted with terminal covers for finger safety.

● Top mounting

Coil drive unit
This unit controls ON-OFF operation for industrial relay with output from electronic equipment.

Coil surge suppression unit
This unit absorbs coil surge voltage due to relay ON-OFF operations.

● Side mounting

Auxiliary contact block
2-pole (1NO+1NC)

● Separate mounting

Off-delay release unit
This industrial relay can be held in closed position even when the instantaneous power failure occurs.

Easy modular system

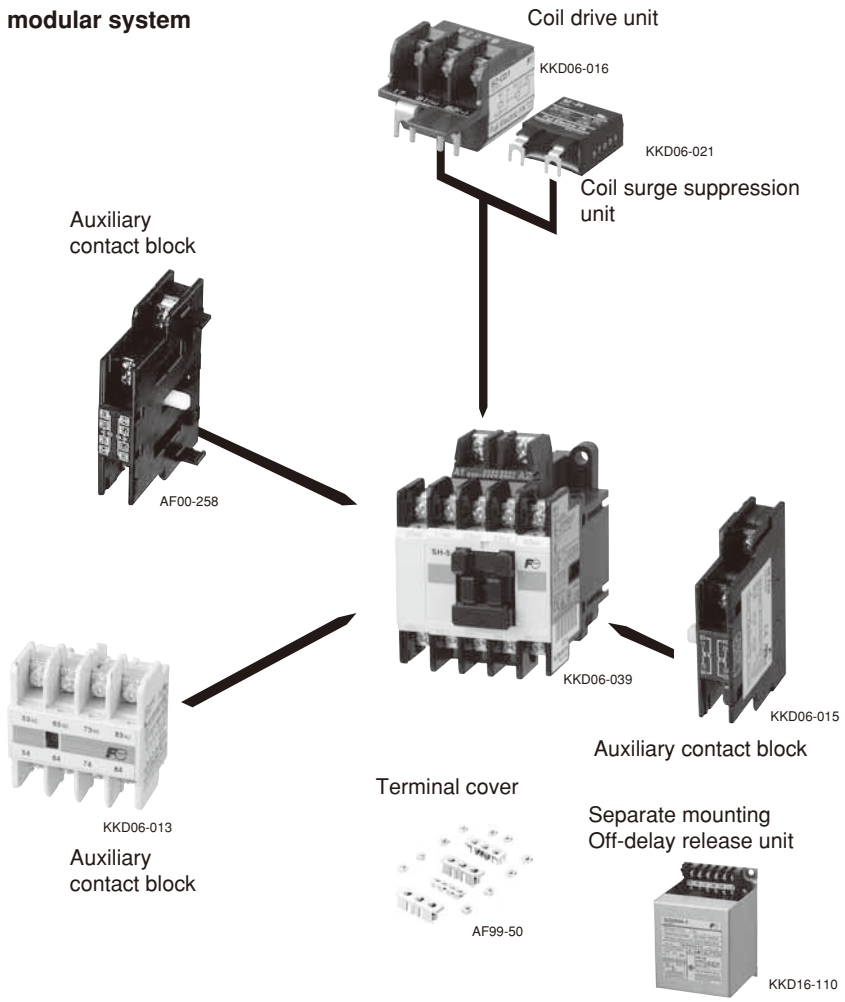

Description		Type	Ordering code
Auxiliary contact block	For SH-4, SH-5		
	Front mounting (Bifurcated)		
	4NO	**SZ-A40**	SZ1A40
	3NO+1NC	**SZ-A31**	SZ1A31
	2NO+2NC	**SZ-A22**	SZ1A22
	2NO	**SZ-A20**	SZ1A20
	1NO+1NC	**SZ-A11**	SZ1A11
	2NC	**SZ-A02**	SZ1A02
	1NO+1NC *	**SZ-A111**	SZ1A111
	2NO+2NC *	**SZ-A222**	SZ1A222
	Front mountig (Single button)		
	4NO	**SZ-A40H**	SZ1A40H
	3NO+1NC	**SZ-A31H**	SZ1A31H
	2NO+2NC	**SZ-A22H**	SZ1A22H
	Side mounting (Bifurcated)		
	1NO+1NC	**SZ-AS1**	SZ1AS1
	Side mounting (Single button)		
	1NO+1NC	**SZ-AS1H**	SZ1AS1H

Description		Type	Ordering code
Terminal cover	For SH-4, SH-4H	**SZ-T1**	SZ1T1
	For SH-5, SH-5H	**SZ-T2**	SZ1T2
	For front mounting contact block		
	4-pole	**SZ-T5**	SZ1T5
	2-pole	**SZ-T6**	SZ1T6
	For side mounting contact block		
	1-pole	**SZ-T7**	SZ1T7
Coil drive unit	24V DC Relay contact	**SZ-CD1**	SZ1CD1
	Solid-state contact	**SZ-03/CD2-24**	SZ103CD224
Coil surge suppression unit	Varistor 24-48V AC/DC	**SZ-Z1**	SZ1Z1
	100-250V AC/DC	**SZ-Z2**	SZ1Z2
	380-440V AC/DC	**SZ-Z3**	SZ1Z3
	24-48V AC/DC with LED	**SZ-Z6**	SZ1Z6
	100-250V AC/DC with LED	**SZ-Z7**	SZ1Z7
	C-R 24-48V AC/DC	**SZ-Z4**	SZ1Z4
	100-250V AC/DC	**SZ-Z5**	SZ1Z5
	24-48V AC/DC with LED	**SZ-Z8**	SZ1Z8
	100-250V AC/DC with LED	**SZ-Z9**	SZ1Z9
Off-delay release unit	100V AC 50/60Hz	**SZ1DE20-1**	SZ1DE20-1
	110V AC 50/60Hz	**SZ1DE20-H**	SZ1DE20-H
	200V AC 50/60Hz	**SZ1DE20-2**	SZ1DE20-2
	220V AC 50/60Hz	**SZ1DE20-M**	SZ1DE20-M
	Up to 240V AC available		
Live section cover	For SH-4, SH-4H	**SZ-JC1**	SZ1JC1
	For SH-5, SH-5H	**SZ-JC2**	SZ1JC2

Note: * Overlapping contact

Standard type industrial relays

■ Description

They are compact and highly efficient and have a long service life, and are suited for industrial electrical control applications. Typical applications include machine tools, process lines, conveyors and automatic and semi-automatic equipment.
The maximum contact ratings are 550 volts AC and 220 volts DC. Operating coils with rating of up to 600 volts AC are available.

KKD06-067
SH-4/4-pole

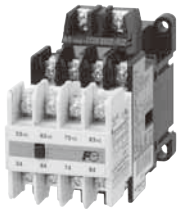
KKD06-038
SH-4/8-pole

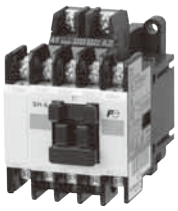
KKD06-039
SH-5/5-pole

■ Features

- Mounting compatible with conventional SRC50 series industrial relays
- Employing of bifurcated contact to increase high contact reliability in low-level circuit use (5V, 3mA) and single button auxiliary contact applicable for large current circuit use.
- Variety of optional function units available
  Auxiliary contact block (2 or 4-pole)
  Off-delay release unit
  Coil surge suppression unit
  Operation counter
- Snap-on 35mm IEC and DIN rail mounting available
- Meets JIS, IEC, BS, NEMA and VDE Standards
  UL, CSA,TÜV, CCC, BV and LR approved
- Terminal numbers meet IEC

C2

■ Contact ratings

Type	Ordering code *2	Contact	Pole	Rated thermal current (A)	Make and break capacity AC (A)	Rated operational current (A)					
						AC Voltage (V)	Ind. AC-15	Res. AC-12	DC Voltage (V)	Ind. *1 DC-13	Res. DC-12
SH-4	SH04AA-■□	Bifurcated contact	4 8	10	60 30 15 12	110 220 440 550	6 3 1.5 1.2	10 8 5 5	24 48 110 220	3 1.5 0.55 0.27	5 3 2.5 1
SH-5	SH05AA-■□	Bifurcated contact	5	10	60 30 15 12	110 220 440 550	6 3 1.5 1.2	10 8 5 5	24 48 110 220	3 1.5 0.55 0.27	5 3 2.5 1
SH-4H	SH04AH-■□	Single contact	4 8	10	60 60 40 40	110 220 440 550	6 6 4 4	10 10 10 10	24 48 110 220	5 1.5 0.7 0.27	10 5 4 1
SH-5H	SH05AH-■□	Single contact	5	10	60 60 40 40	110 220 440 550	6 6 4 4	10 10 10 10	24 48 110 220	5 1.5 0.7 0.27	10 5 4 1

Notes: *1 Time constant is less than 70ms.
*2 Enter the coil voltage code in the ■mark.
Enter the contact arrangement code in the □ mark.
8-pole type SH-4(H) is a combination of 4-pole type SH-4(H) and add-on auxiliary contact block SZ-A □ (H).

■ Coil voltage

Type	Operating coil voltage *1	Coil voltage code *2	Operating voltage range	Wiring
SH-4 SH-5 SH-4H SH-5H	24V 50Hz/24 to 26V 60Hz 48V 50Hz/48 to 52V 60Hz 100V 50Hz/100 to 110V 60Hz 110 to 120V 50Hz/120 to 130V 60Hz 200V 50Hz/200 to 220V 60Hz 220 to 240V 50Hz/240 to 260V 60Hz 346 to 380V 50Hz/380 to 420V 60Hz 380 to 400V 50Hz/400 to 440V 60Hz 415 to 440V 50Hz/440 to 480V 60Hz 480 to 500V 50Hz/500 to 550V 60Hz	**E** **F** **1** **K** **2** **P** **S** **4** **T** **5**	0.85 to 1.1 times coil rated voltage	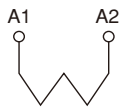

Notes: *1 Other voltages between 24V and 600V AC are available on request.
*2 When ordering, specify the coil voltage code.

Industrial Relays
SH series Standard type

■ Coil characteristics

Type	Pole	Power consumption		Pick-up voltage (V)		Drop-out voltage (V)		Watt loss (W)	
		Inrush (VA)	Sealed (VA)	200V 50Hz	220V 60Hz	200V 50Hz	220V 60Hz	200V 50Hz	220V 60Hz
SH-4, 4H	4	95	9	105–125	116–136	70–98	80–110	2.7	2.8
SH-4, 4H	8	95	9	105–125	116–136	70–98	80–110	2.7	2.8
SH-5, 5H	5	95	9	105–125	116–136	70–98	80–110	2.7	2.8

Note: Coil rating 200V 50Hz/200–220V 60Hz

■ Coil characteristics

Type	Pole	Contact arrangement	Voltage (V)	Frequency (Hz)	Pick-up voltage (V)		Drop-out voltage (V)	
					NO contact ON	NC contact OFF	NO contact OFF	NC contact ON
SH-4, 4H	4	2NO+2NC	200	50	9–20	5–15	5–15	9–20
SH-4, 4H	8	4NO+4NC	200	50	9–20	5–15	5–15	9–20
SH-5, 5H	5	3NO+2NC	200	50	9–20	5–15	5–15	9–20

Note: Coil rating 200V 50Hz/200–220V 60Hz

C2

■ Performance data (AC-15)

Type	Pole	Making current	Breaking current	Operating cycles per hour	Voltage	Life expectancy(operations)	
						Electrical	Mechanical
SH-4, 4H	4	10 Ie	1 Ie	1800	220V/440V	500,000	10 million
SH-4, 4H	8	10 Ie	1 Ie	1800	220V/440V	500,000	10 million
SH-5, 5H	5	10 Ie	1 Ie	1800	220V/440V	500,000	10 million

Note: Ie: Rated operational current (A)

■ Combination of industrial relay and auxiliary contact block

The standard type industrial relays can be used according to the combination with the auxiliary contact blocks shown below.

Industrial relay Bifurcated contacts		Add-on auxiliary contact block Front mounting						Side mounting	
Type	Contact arrangement	**SZ-A40** 4NO	**SZ-A31** 3NO+1NC	**SZ-A22** 2NO+2NC	**SZ-A20** 2NO	**SZ-A11** 1NO+1NC	**SZ-A02** 2NC	**SZ-AS1**x2 2NO+2NC	**SZ-AS1** 1NO+1NC
SH-4	4NO	8NO	7NO+1NC	6NO+2NC	6NO	5NO+1NC	4NO+2NC	6NO+2NC	5NO+1NC
	3NO+1NC	7NO+1NC	6NO+2NC	5NO+3NC	5NO+1NC	4NO+2NC	3NO+3NC	5NO+3NC	4NO+2NC
	2NO+2NC	6NO+2NC	5NO+3NC	4NO+4NC	4NO+2NC	3NO+3NC	2NO+4NC	4NO+4NC	3NO+3NC
	8NO	–	–	–	–	–	–	–	–
	7NO+1NC	–	–	–	–	–	–	–	–
	6NO+2NC	–	–	–	–	–	–	–	–
	5NO+3NC	–	–	–	–	–	–	–	–
	4NO+4NC	–	–	–	–	–	–	–	–
SH-5	5NO	9NO	8NO+1NC	7NO+2NC	7NO	6NO+1NC	5NO+2NC	7NO+2NC	6NO+1NC
	4NO+1NC	8NO+1NC	7NO+2NC	6NO+3NC	6NO+1NC	5NO+2NC	4NO+3NC	6NO+3NC	5NO+2NC
	3NO+2NC	7NO+2NC	6NO+3NC	5NO+4NC	5NO+2NC	4NO+3NC	3NO+4NC	5NO+4NC	4NO+3NC
	2NO+3NC	6NO+3NC	5NO+4NC	–	4NO+3NC	3NO+4NC	–	–	3NO+4NC
	1NO+4NC	5NO+4NC	–	–	3NO+4NC	–	–	–	–
	5NC	4NO+5NC	–	–	2NO+5NC	–	–	–	–

Industrial relay Singl econtact		Add-on auxiliary contact block Front mounting		
Type	Contact arrangement	**SZ-A40H** 4NO	**SZ-A31H** 3NO+1NC	**SZ-A22H** 2NO+2NC
SH-4H	4NO	8NO	7NO+1NC	6NO+2NC
	3NO+1NC	–	–	–
	2NO+2NC	–	5NO+3NC	4NO+4NC
SH-5H	5NO	9NO	8NO+1NC	7NO+2NC
	4NO+1NC	–	–	–
	3NO+2NC	–	6NO+3NC	5NO+4NC
	2NO+3NC	–	–	–
	1NO+4NC	–	–	–
	5NC	4NO+5NC	–	–

Notes:
- Both front mounting and side mounting auxiliary contact blocks cannot be mounted on a relay at a time.
- Any auxiliary contact blocks cannot be mounted on 8-pole type SH-4 and SH-4H relays.
- Side mounting contact blocks (SZ-AS1), with bifurcated contacts, can be mounted on SH-4H and SH-5H.

■ Ordering information

Specify the following:
1. Ordering code

Fuji Electric FA Components & Systems Co., Ltd.
Information subject to change without notice

■ Dimensions, mm

SH-4, 4H/4-pole

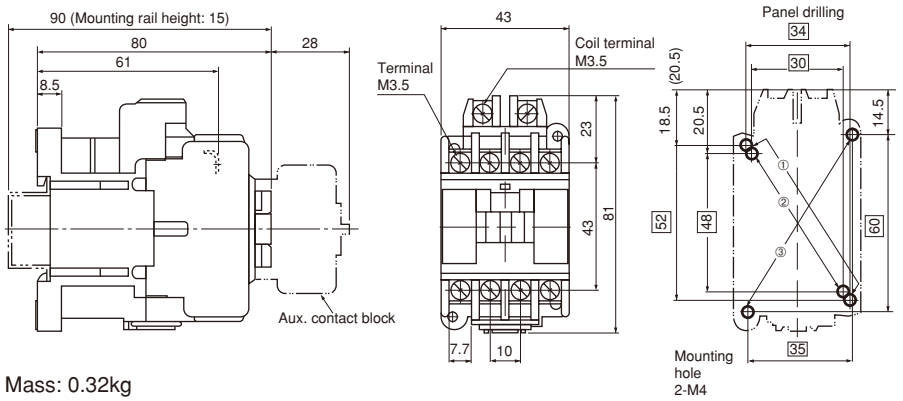

Mass: 0.32kg

■ Contact arrangement

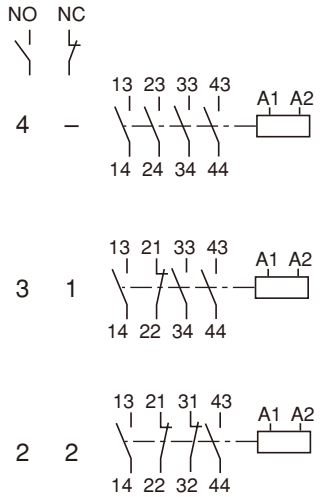

SH-4, 4H/8-pole

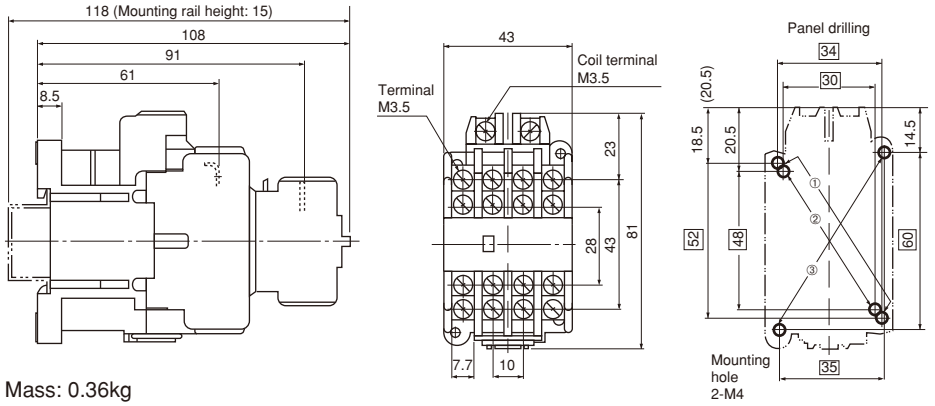

Mass: 0.36kg

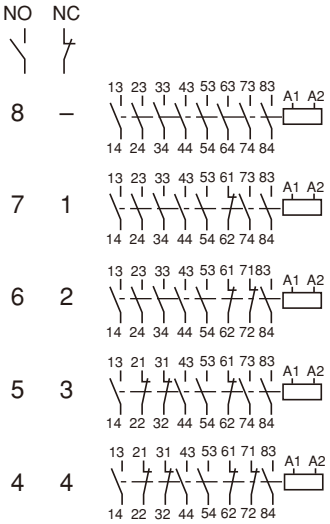

SH-5, 5H/5-pole

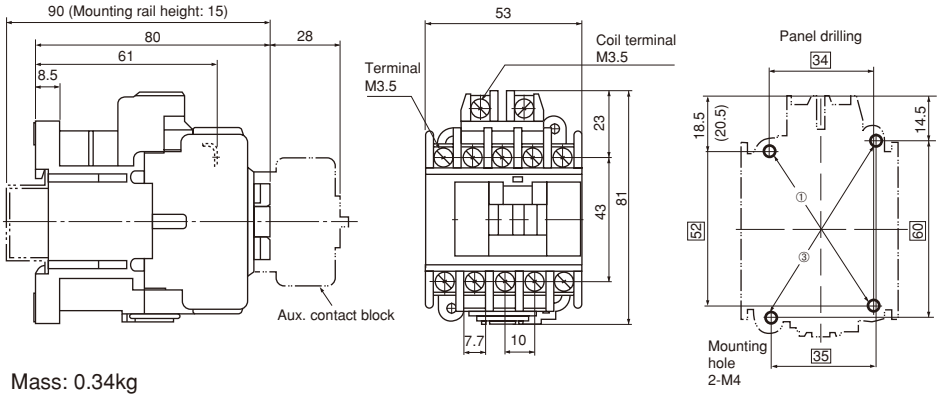

Mass: 0.34kg

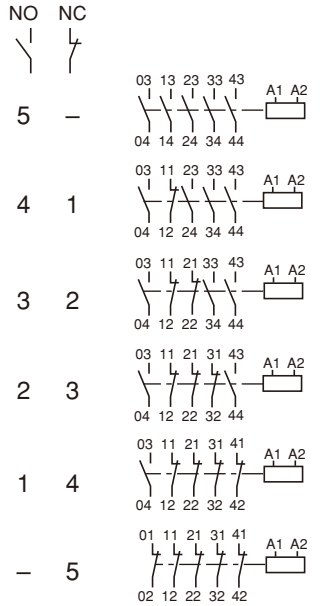

Notes on panel drilling
- Use the two mounting holes on a diagonal line to mount a relay.
- Mounting holes indicated by ① and ② are compatible with those of SRC type.
- Mounting holes indicated by ③ conform to IEC Standards.

Industrial Relays
SH series DC-operated type

DC-operated industrial relays

■ Description

The operating coil is a DC type instead of AC and is energized by a DC power source.
The coil ratings from 24V DC to 220V DC.
The maximum contact ratings are 550V AC or 220V DC.
These relays are typically used where DC is used as a power source on switchboards.
Where AC is used as a power source, sequence control is frequently lost due to the troubles such as power failure or momentary voltage drop.
In the case of DC-control, a battery power supply is frequently used because it is not susceptible to external influences. DC-operated relays are highly suitable for important control applications.

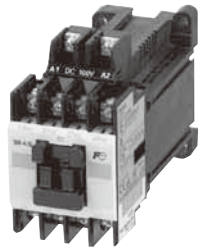

KKD06-232

SH-4/G

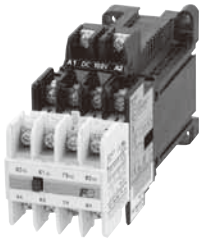

KKD06-231

SH-4/G 8-pole

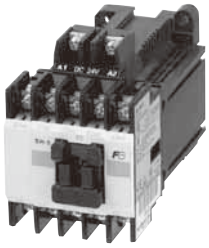

KKD06-233

SH-5/G

■ Features

- Employing of bifurcated contact to increase high contact reliability in low-level circuit use (5V, 3mA)
- Variety of optional function units available
  Auxiliary contact block (2 or 4-pole)
  Coil surge suppression unit
  Operation counter
- Snap-on 35mm IEC and DIN rail mountings available
- Meets JIS, IEC, BS, NEMA and VDE Standards
  UL, CSA, TÜV, CCC and BV approved
- Terminal numbers meet IEC

■ Performance data

Mechanical durability: 10 million operations
Electrical durability: 500,000 operations
(at AC-15 rated operational current)
Operating cycles per hour:1800
Allowable ambient temp.:
-5° to +50°C

■ Contact ratings

Type	Ordering code *2	Pole	Rated thermal current (A)	Make and break capacity AC (A)	Rated operational current (A) AC Voltage (V)	Ind. AC-15	Res. AC-12	DC Voltage (V)	Ind. *1 DC-13	Res. DC-14
SH-4/G	SH04AG-■□	4	10	60	110	6	10	24	3	5
				30	220	3	8	48	1.5	3
				15	440	1.5	5	110	0.55	2.5
				12	550	1.2	5	220	0.27	1
		8	10	60	110	6	10	24	3	5
				30	220	3	8	48	1.5	3
				15	440	1.5	5	110	0.55	2.5
				12	550	1.2	5	220	0.27	1
SH-5/G	SH05AG-■□	5	10	60	110	6	10	24	3	5
				30	220	3	8	48	1.5	3
				15	440	1.5	5	110	0.55	2.5
				12	550	1.2	5	220	0.27	1

Notes: *1 Time constant is less than 70ms.
*2 Enter the coil voltage code in the ■ mark.
Enter the contact arrangement code in the □ mark.

■ Coil ratings

Type	Pole	Contact arrangement	Operating coil voltage (V DC)	Code	Power consumption(W)
SH-4/G	4	4NO, 3NO+1NC, 2NO+2NC	24	**E**	7
	8	8NO, 7NO+1NC, 6NO+2NC 5NO+3NC, 4NO+4NC	48	**F**	
			100	**1**	
			110	**H**	
SH-5/G	5	5NO, 4NO+1NC, 3NO+2NC 2NO+3NC, 1NO+4NC, 5NC	200	**2**	
			220	**M**	

■ Ordering information

Specify the following:
1. Ordering code

■ Combination with auxiliary contact blocks

Same as standard type.
See page C2/4.

■ Operating characteristics

Type	Pole	Contact arrangement	Voltage	Pick-up time (ms.) NO contact ON	NC contact OFF	Drop-out time (ms.) NO contact OFF	NC contact ON
SH-4/G	4	2NO+2NC	100V DC	45–50	35–40	20–25	25–30
	8	4NO+4NC	100V DC	45–50	35–40	20–25	25–30
SH-5/G	5	3NO+2NC	100V DC	45–50	35–40	20–25	25–30

Note: Coil rating 100V DC

■ Dimensions, mm

SH-4/G, 4-pole

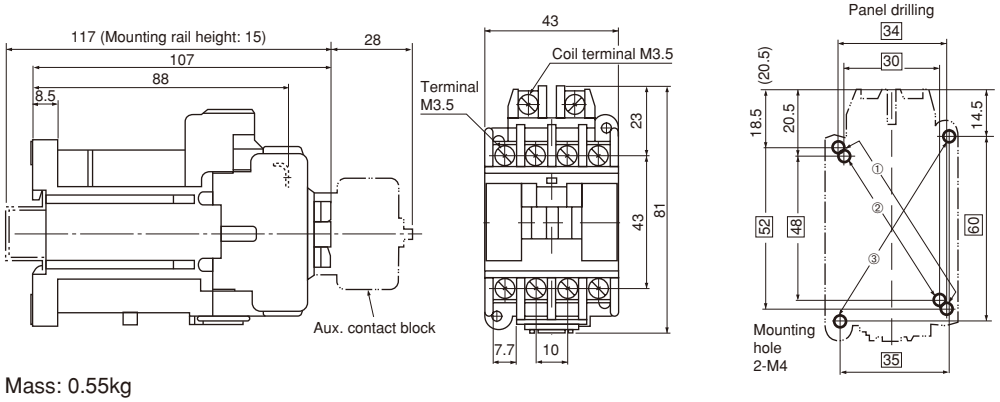

Mass: 0.55kg

■ Contact arrangement

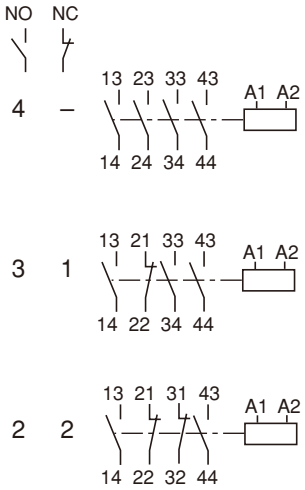

SH-4/G, 8-pole

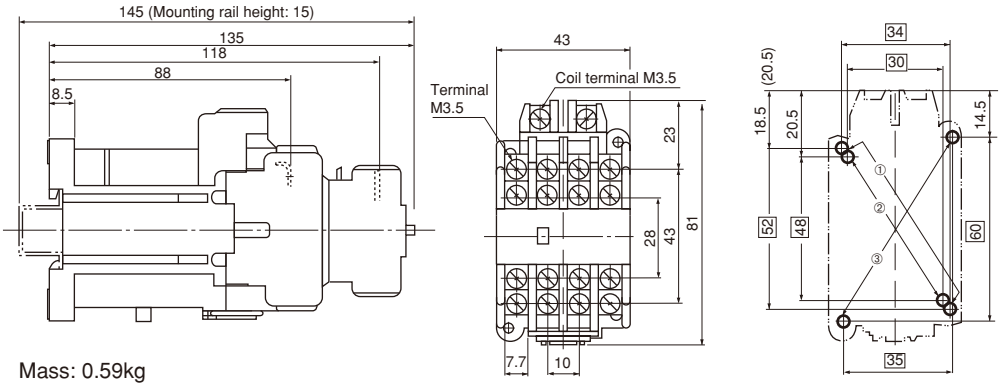

Mass: 0.59kg

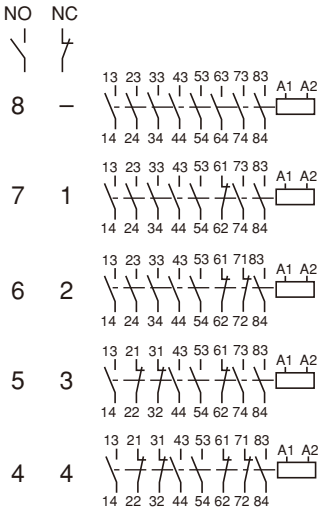

SH-5/G, 5-pole

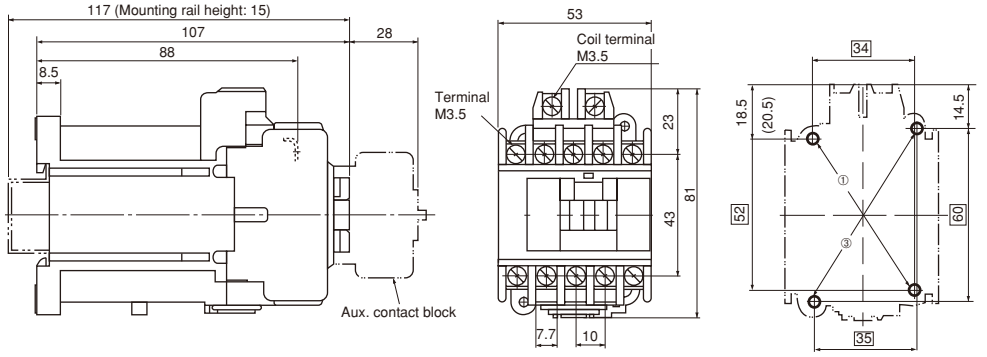

Mass: 0.58kg

Notes on panel drilling
- Use the two mounting holes on a diagonal line to mount a relay.
- Mounting holes indicated by ① and ② are compatible with those of SRC type.
- Mounting holes indicated by ③ conform to IEC Standards.

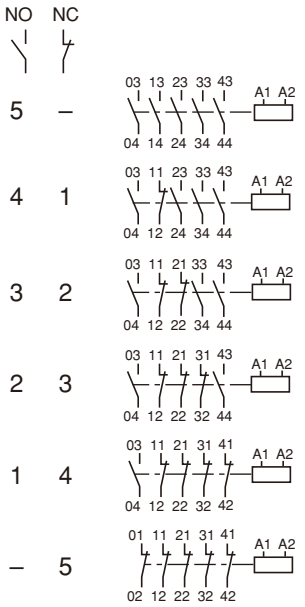

Industrial Relays
SH series UL and CSA approved

UL and CSA appproved

c UL us LISTED
UL file No. E44592
CSA file No. LR20479

■ Types and ratings

● AC operated

Type	Ordering code	Pole	Continuous current (A)	Rated operational current (A) AC Volts	AC Make	AC Break	DC Volts	DC Make	DC Break	Rating code AC	Rating code DC	Contact arrangement	Operating coil
SH-4	SH04AA-■□	4	10	120 240 480 600	60 30 15 12	6 3 1.5 1.2	125 250	0.55 0.27	0.55 0.27	A600	Q300	4NO 3NO+1NC 2NO+2NC	Available for 24V to 600V AC 50/60Hz
		8	10	120 240 480 600	60 30 15 12	6 3 1.5 1.2	125 250	0.55 0.27	0.55 0.27	A600	Q300	8NO, 7NO+1NC 6NO+2NC 5NO+3NC 4NO+4NC	
SH-5	SH05AA-■□	5	10	120 240 480 600	60 30 15 12	6 3 1.5 1.2	125 250	0.55 0.27	0.55 0.27	A600	Q300	5NO, 4NO+1NC 3NO+2NC 2NO+3NC 1NO+4NC, 5NO	

Notes: • SH-4 type with 8-pole is a combination of SH-4 type industrial relay with 4-pole and SZ-A □ (Front mounting) type auxiliary contact block with 4-pole.
• Enter the coil voltage code in the ■ mark. *See page C2-1.*
Enter the contact arrangement code in the □ mark. *See page C2-1.*

● DC operated

Type	Ordering code	Pole	Continuous current (A)	Rated operational current (A) AC Volts	AC Make	AC Break	DC Volts	DC Make	DC Break	Rating code AC	Rating code DC	Contact arrangement	Operating coil
SH-4/G	SH04AG-■□	4	10	120 240 480 600	60 30 15 12	6 3 1.5 1.2	125 250	0.55 0.27	0.55 0.27	A600	Q300	4NO 3NO+1NC 2NO+2NC	Available for 24V to 220V DC
		8	10	120 240 480 600	60 30 15 12	6 3 1.5 1.2	125 250	0.55 0.27	0.55 0.27	A600	Q300	8NO, 7NO+1NC 6NO+2NC 5NO+3NC 4NO+4NC	
SH-5/G	SH05AG-■□	5	10	120 240 480 600	60 30 15 12	6 3 1.5 1.2	125 250	0.55 0.27	0.55 0.27	A600	Q300	5NO, 4NO+1NC 3NO+2NC 2NO+3NC 1NO+4NC, 5NC	

Notes: • SH-4/G type with 8-pole is a combination of SH-4/G type industrial relay with 4-pole and SZ-A□ (Front mounting) type auxiliary contact block with 4-pole.
• Enter the coil voltage code in the ■ mark.
Enter the contact arrangement code in the □ mark.

■ Ordering information

Specify the following:
1. Ordering code

■ Dimentions

Same as standard type industrial relay.
See page C2-5 and C2-7.

■ Combination with auxiliary contact blocks

Same as standard type.
See page C2-4.

TÜV and CCC approved

TÜV license No. R9151523
CCC Certificated No. 2003010309087 168

■ Types and ratings

● AC operated, bifurcated contact

Type	Ordering code	Contact	Pole	Continuous current (A)	Make and break capacity AC (A)	Rated operational current (A) AC Voltage (V)	Ind. AC-15	Res. AC-12	DC Voltage (V)	Ind. *1 DC-13	Res. DC-12
SH-4	SH04AA-■ □	Bifurcated contact	4 8	10	60 30 15 12	110 220 440 550	6 3 1.5 1.2	6 3 1.5 1.2	24 48 110 220	3 1.5 0.55 0.27	5 3 2.5 1
SH-5	SH05AA-■ □	Bifurcated contact	5	10	60 30 15 12	110 220 440 550	6 3 1.5 1.2	6 3 1.5 1.2	24 48 110 220	3 1.5 0.55 0.27	5 3 2.5 1

Notes: *1 Time constant is less than 70ms.
*2 Enter the coil voltage code in the ■ mark.
Enter the contact arrangement code in the □ mark.
• 8-pole type SH-4(H) is a combination of 4-pole type SH-4(H) and add-on auxiliary contact block SZ-A □ (H).

● DC operated

Type	Ordering code *2	Pole	Rated thermal current (A)	Make and break capacity AC (A)	Rated operational current (A) AC Voltage (V)	Ind. AC-15	Res. AC-12	DC Voltage (V)	Ind. *1 DC-13	Res. DC-14
SH-4/G	SH04AgG-■ □	4 8	10	60 30 15 12	110 220 440 550	6 3 1.5 1.2	10 8 5 5	24 48 110 220	3 1.5 0.55 0.27	5 3 2.5 1
SH-5/G	SH05AG-■ □	5	10	60 30 15 12	110 220 440 550	6 3 1.5 1.2	10 8 5 5	24 48 110 220	3 1.5 0.55 0.27	5 3 2.5 1

Notes: *1 Time constant is less than 70ms.
*2 Enter the coil voltage code in the ■ mark.
Enter the contact arrangement code in the □ mark.).

CCC approved

● AC operated, single contact

Type	Certificate No.
SH-4H **SH-5H**	2003010309087168

● With extra pick-up operating coil

Type	Certificate No.
SH-4/U **SH-5/U**	2003010309087168

● Auxiliary contact blocks/optional

Description	Type	Applicable type	Certificate No.
Front mounting, bifurcated	**SZ-A40** **SZ-A31** **SZ-A22** **SZ-A20** **SZ-A11** **SZ-A02**	SH-4, SH-5	Certified according to an applicable industrial type
Front mounting, single button	**SZ-A40H** **SZ-A31H** **SZ-A22H**	SH-4, SH-5	
Side mounting, bifurcated	**SZ-AS1**	SH-4, SH-5	
Side mounting, single button	**SZ-AS1H**	SH-4, SH-5	

■ Ordering information

Specify the following:
1. Ordering code
2. CCC approved

Industrial Relays
SH series Off-delay release type

Off-delay release industrial relays

■ Description

This type of control relay has a capacitor connected in parallel with the operating coil, and the contacts are released with a delay of 1 to 5 seconds after the coil has been de-energized. If a momentary voltage drop or a power failure in AC control power supply of standard type control relay takes place, the operating coils are de-energized. Reclosing of the contacts must be carried out every time. The off-delay release relay is so designed that in the event of a brief power outage the coil will not release the contacts and control sequence is maintained.

■ Operation

The power supply is fed to the rectifier which in turn charges the capacitor.
When a power failure takes place, the discharge current flows into the magnetic coil which holds the relay closed for 1 to 5 seconds. When the switch (SW) is opened the contacts will immediately open without delay.

Off-delay release unit (SZ1DE20)

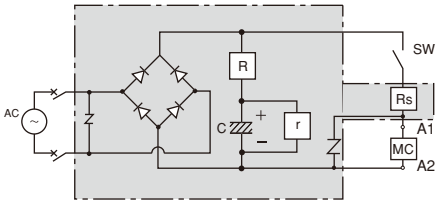

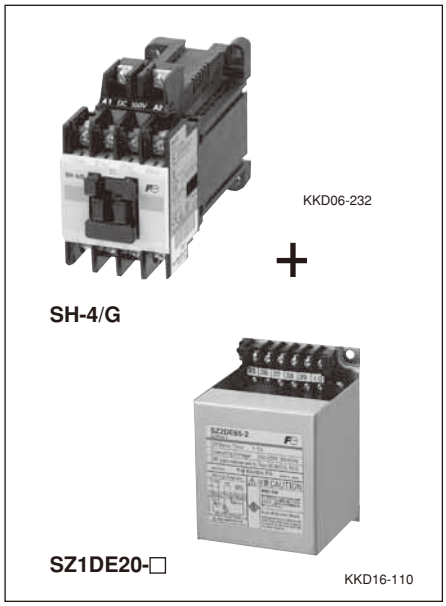

C2

■ Types and ordering codes

Typer Contactor	Off-delay release unit	Ordering code Contactor	Off-delay release unit	Contact arrangement	Rated thermal current (A)	Make and break capacity at AC (A)
SH-4/G	**SZ1DE20-1**	SH04AG-■ □	**SZ1DE20-1**	4NO, 3NO+1NC, 2NO+2NC	10	66
	SZ1DE20-H		**SZ1DE20-H**	8NO, 7NO+1NC, 6NO+2NC		33
	SZ1DE20-2		**SZ1DE20-2**	5NO+3NO, 4NO+4NC		16.5
	SZ1DE20-M		**SZ1DE20-M**			13.2
SH-5/G	**SZ1DE20-1**	SH04AG-■ □	**SZ1DE20-1**	5NO, 4NO+1NC, 3NO+2NC	10	66
	SZ1DE20-H		**SZ1DE20-H**	2NO+3NC, 1NO+4NC, 5NC		33
	SZ1DE20-2		**SZ1DE20-2**			16.5
	SZ1DE20-M		**SZ1DE20-M**			13.2

Notes: • Enter the coil voltage code in the ■ mark.
Enter the contact arrangement code in the □ mark.
• Rated operational current: Same as standard type, *see page C2-6.*

■ Performance data

Type	Hold time	Operating cycles per hour	Capacitor life
SH-4/G+SZ1DE20 SH-5/G+SZ1DE20	1 to 5 sec.	600	100,000 operations

■ Operating voltage and frequency

● Magnetic coil

Type	Voltage	Code
SH-4/G	100V DC	**1**
SH-5/G	110V DC	**H**
	200V DC	**2**
	220V DC	**M**

● OFF-delay release unit

SZ1DE20-1	100V AC 50/60Hz
SZ1DE20-H	110V AC 50/60Hz
SZ1DE20-2	200V AC 50/60Hz
SZ1DE20-M	220V AC 50/60Hz

■ Combination with auxiliary contact blocks

Same as standard type.
See page C2-4.

■ Dimensions, mm

● Off-delay release unit

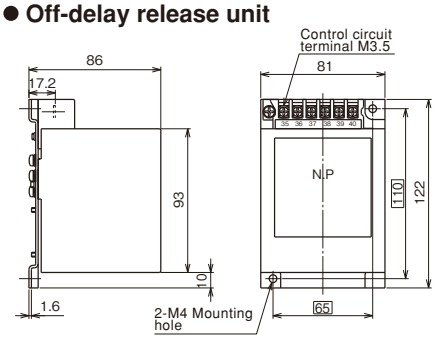

Mass: 0.6kg

● Industrial relay:
See page C2-7, DC-operated industrial relay

■ Wiring diagram

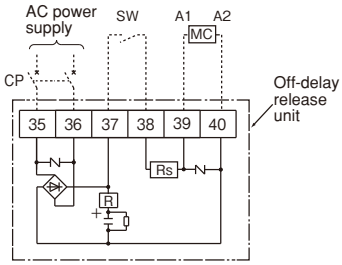

■ Ordering information

Specify the following:
1. Ordering code

Note:
When ordering, make sure that the input voltage (AC) of the OFF-delay release unit is equal to the operating voltage (DC) of the industrial relay.
Example:
SZ1DE20-1+SH-5/G 100V DC
(OFF-delay release unit)+(Relay)

Fuji Electric FA Components & Systems Co., Ltd.
Information subject to change without notice

Mechanical latch industrial relays

■ Description

Mechanical latch relays are used where operating sequence continuity must be maintained regardless of any outside interruptions, such as power failures or momentary voltage drop.
These relays are provided with two coils. One is a closing coil (CC) and the other is a trip coil (TC). An interlocking circuit is provided between the CC coil and TC coil. Since no coil voltage is applied during operation it is extremely economical and also quiet.

■ Operating method

● Closing

When the closing coil is energized the latch mechanism interlocks to latch and the NC contact connected in series with the closing coil opens and the coil is de-energized.

Operating notes
- When carrying out a sequence operating check make sure that the load is disconnected.
- The electrical signal time for closing and tripping should be 0.3 sec. or more.
- Both the closing and tripping coils are short time rating.
  Closing coil: Max. 30 seconds
  Trip coil: Max. 15 seconds
- Since the relay and the latch mechanisms are adjusted at the time of assembly, do not strip nor replace the contacts in the field.
- If current is applied simultaneously to both the closing and tripping circuits, the coils may be heated and damaged. An interlocking circuit is required to prevent this.

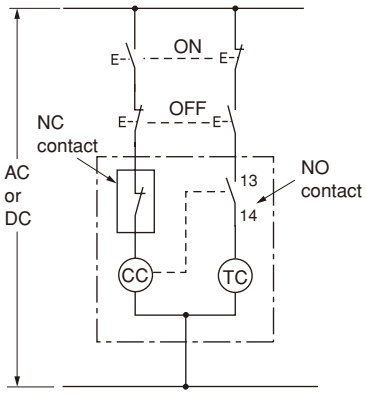

● Tripping

When the trip coil is energized the latch is released and tripping is carried out by means of the back spring. At this time the NO contact connected in series with the tripping coil opens.

■ Performance data

- Mechanical durability: 1 million operations
- Electrical durability: 500,000 operations (at AC-15 rated operational current)
- Operating cycles per hour: 1200
- Allowable ambient temp.: -5°C to +50°C

■ Ordering information

Specify the following:
1. Ordering code

Notes:
1. Mechanical latch units cannot be sold separately.
2. Do not detach mechanical latch units from relays and do not make modifications such as attaching mechanical latch units to other industrial relays.

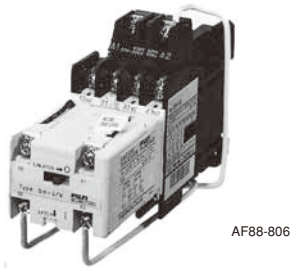
AF88-806
SH-4/V

AF88-808
SH-5/V

■ Manual operating sequence

Closing: Press the button in the direction of the arrow.
Tripping: Push the lever in the direction of the arrow.

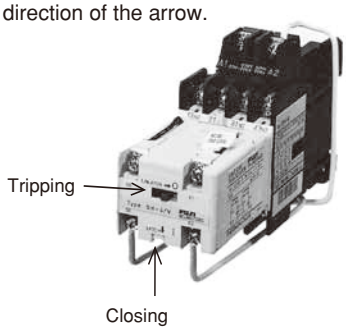

■ Types and ordering code

AC operated Type	Ordering code	DC operated Type	Ordering code	Contact arrangement	Rated thermal current (A)	Make/break capacity AC (A)
SH-4/V	SH04AV-■□	**SH-4/VG**	SH04AD-■□	3NO, 2NO+1NC, 1NO+2NC	10	60 30 15 12
				5NO+2NC, 4NO+3NC 3NO+4NC		
SH-5/V	SH05AV-■□	**SH-5/VG**	SH05AD-■□	4NO, 3NO+1NC, 2NO+2NC	10	60 30 15 12

Notes: • Enter the coil voltage code in the ■ mark.
Enter the contact arrangement code in the □ mark.
• Rated operational current: Same as standard type, *see page C2-3.*

■ Coil ratings

Type	Operating coil Voltage	Code	Power consumption AC operated Closing	AC operated Tripping	DC operated Closing	DC operated Tripping	Minimum energized time	Time rating Closing	Time rating Tripping	Operating voltage range
SH-4/V SH-5/V	100V/100-110V AC 50Hz/60Hz 200V/200-220V AC 50Hz/60Hz	**1** **2**	95VA	150VA	7W	150W	0.3 sec.	30 sec.	15 sec.	0.85 to 1.1 times coil rated voltage
SH-4/VG SH-5/VG	100V DC 110V DC 200V DC 220V DC	**1** **H** **2** **M**								

Note: Coil voltage range from 24V to 220V AC and 24V to 220V DC is available.

Industrial Relays
SH series Mechanical latch type

■ Dimensions, mm

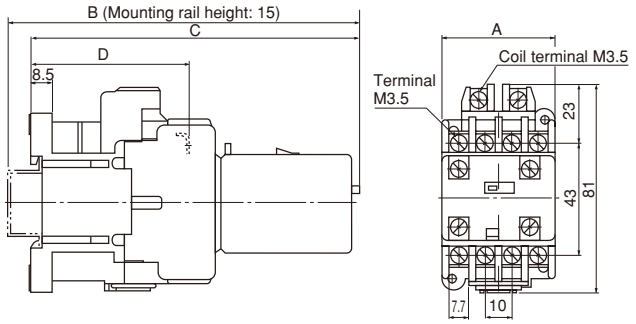

Panel drilling
SH-4/V, VG

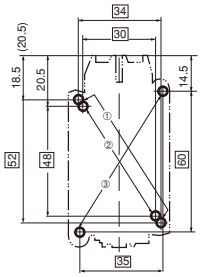

SH-5/V, VG

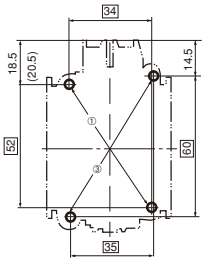

Type	No. of contact	A	B	C	D	Mass (kg)
SH-4/V	3	43	138	128	61	0.42
SH-4/V	7	67	138	128	61	0.47
SH-5/V	4	53	138	128	61	0.44
SH-4/VG	3	43	165	155	88	0.66
SH-4/VG	7	67	165	155	88	0.72
SH-5/VG	4	53	165	155	88	0.69

Note on panel drilling
- Use the two mounting holes on a diagonal line to mount a relay.
- Mounting holes indicated by ① and ② are compatible with those of SRC type.
- Mounting holes indicated by ③ conform to IEC Standards.

■ Wiring diagrams

SH-4/V, SH-4/VG (3-contact)
3NO

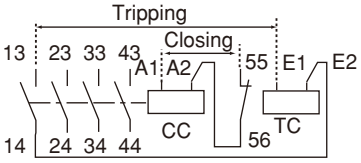

2NO+1NC

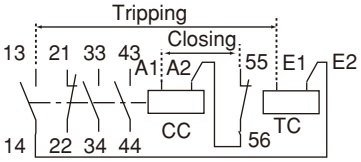

1NO+2NC

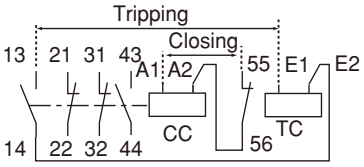

SH-4/V, SH-4/VG (7-contact)
5NO+2NC

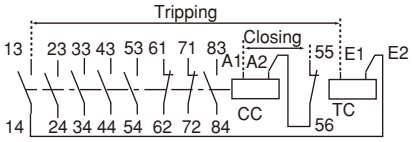

4NO+3NC

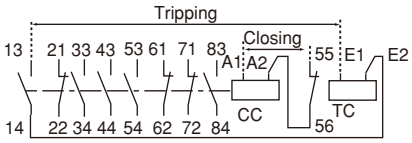

3NO+4NC

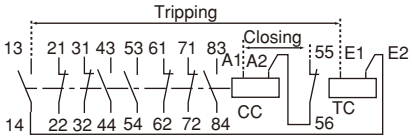

SH-5/V, SH-5/VG
4NO

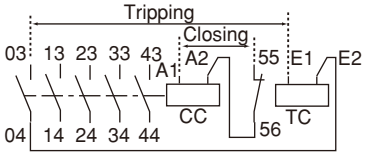

3NO+1NC

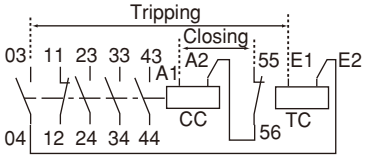

2NO+2NC

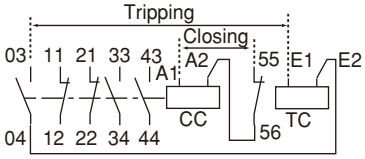

CC: Closing coil
TC: Tripping coil

■ Combination of industrial relay and auxiliary contact block

The mechanical latch industrial relays can be used according to the combination with the side mounting auxiliary contact blocks as shown on the right.

Mechanical latch industrial relay		Auxiliary contact block (Side mounting)	
Type	Contact arragement	**SZ-AS1V**x2 2NO+2NC	**SZ-AS1V** 1NO+1NC
SH-4/V **SH-4/VG**	3NO	5NO+2NC	4NO+1NC
	2NO+1NC	4NO+3NC	3NO+2NC
	1NO+2NC	3NO+4NC	2NO+3NC
	5NO+2NC	–	–
	4NO+3NC	–	–
	3NO+4NC	–	–
SH-5/V **SH-5/VG**	4NO	6NO+2NC	5NO+1NC
	3NO+1NC	5NO+3NC	4NO+2NC
	2NO+2NC	4NO+4NC	3NO+3NC

Fuji Electric FA Components & Systems Co., Ltd.
Information subject to change without notice

Industrial Relays
SH series With extra pick-up operating coil

Industrial relays with extra pick-up operating coil

■ Description

Generally, ordinary control relays are designed to operate within 85 110% of the rated voltage. However, relays with extra pick-up operating coils have a wider operating range of 75 110% of their normal rated voltage. They are used where the control power source is low and occasional voltage drops can be expected. Their performance is dependable in spite of low voltage conditions. Their outer dimensions and performance are similar to the standard type relay. They have a mechanical durability of 2.5 million operations.

■ Ordering information

Specify the following:
1. Ordering code

■ Performance data

- Same as standard type.
  See page C2-4.
- Mechanical durability: 2.5 million operations

■ Dimensions

Same as standard type.
See page C2-5.

■ Combination of contact blocks

Same as standard type.
See page C2-4.

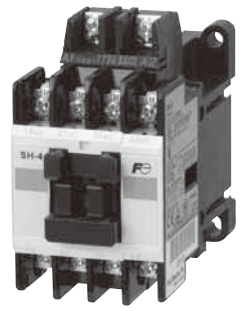

SH-4/U KKD06-067

■ Types and ordering codes

Type	Crdering code	Pole	Contact arrangement	Rated thermal current (A)	Make and break capacity AC (A)	Rated operational current (A) AC Volts (V)	nd. AC-15	Res. AC-12	DC Volts (V)	Ind.* DC-13	Res. DC-12
SH-4/U	SH04AU-■ □	4	4NO, 3NO+1NC	10	60	110	6	10	24	3	5
			2NO+2NC		30	220	3	8	48	1.5	3
					15	440	1.5	5	110	0.55	2.5
					12	550	1.2	5	220	0.27	1
		8	8NO, 7NO+1NC	10	60	110	6	10	24	3	5
			6NO+2NC, 5NO+3NC		30	220	3	8	48	1.5	3
			5NO+3NC		15	440	1.5	5	110	0.55	2.5
			4NO+4NC		12	550	1.2	5	220	0.27	1
SH-5/U	SH05AU-■ □	5	5NO, 4NO+1NC	10	60	110	6	10	24	3	5
			3NO+2NC		30	220	3	8	48	1.5	3
			2NO+3NC		15	440	1.5	5	110	0.55	2.5
			1NO+4NC, 5NC		12	550	1.2	5	220	0.27	1

Notes: 1. * Time constant is less than 70ms.
2. 8-pole type SH-4/U is a combination of 4-pole type SH-4/U and 4-pole auxiliary contact block SZ-A□.
3. Enter the coil voltage code in the ■ mark.
Enter the contact arrangement code in the □ mark.

■ Coil voltage

Type	Operating coil voltage	**Coil voltage code**	Wiring
SH-4/U	100V AC 50Hz/100–110V AC 60Hz	**1**	A1 A2
SH-5/U	110-120V AC 50Hz/120–130V AC 60Hz	**K**	
	200V AC 50Hz/200–220V AC 60Hz	**2**	
	200-240V AC 50Hz/240–260V AC 60Hz	**P**	
	380-400V AC 50Hz/400–440V AC 60Hz	**4**	

Note: The above is the normal voltage. Other voltages between 24V and 550V AC are available on request.

■ Coil characteristics

Type	Pole	Power consumption (VA) Inrush	Sealed	Watt loss (W) 200V 50Hz	200V 60Hz	Pick-up voltage 50Hz	60Hz	Drop-out voltage 50Hz	60Hz	Operating time (ms) Coil ON→ Contact ON	Coil OFF→ Contact O
SH-4/U	4	120	15	4	4	93–115	102–124	58–88	66–96	9–16	6–13
	8	120	15	4	4	93–116	102–126	58–90	66–99	8–15	6–13
SH-5/U	5	120	15	4	4	93–116	102–126	58–90	66–99	9–17	6–13

Note: Coil ratings: 200V 50Hz/200–220V 60Hz
Operating time is based on 200V 50Hz

Industrial Relays
SH series With quick terminals

Industrial relays with newly developed quick terminals

■ Description

The product and terminal structure comply with international safety standards.
It complies with VGB4, DIN57106, and VDE0106 Teil 100 which are recommendation for preventing the exposure of charging current part.
Components such fork crimp terminals, and ring crimp terminals are inserted and secured by tightening the terminal screw. See Figures 1 to 3.

■ Features

- Easy wiring
  Wiring time is at least 50% shorter than the conventional screw type terminal.
- Safety
  The finger protection feature protects the charging current part during maintenance and check (complying with EN60947-4-1, and IEC60947-4-1)

SH-4Y

AF95-244

- Standard
  UL, CSA and TÜV approved

■ Types and ordering codes

Type	Ordering code	Pole	Contact arrangement	Rated thermal current (A)
SH-4Y	SH04ZA- ■40	4	4NO	10
	SH04ZA- ■31	4	3NO+1NC	10
	SH04ZA- ■22	4	2NO+2NC	10
	SH04ZA- ■80	8*	8NO	10
	SH04ZA- ■71	8*	7NO+1NC	10
	SH04ZA- ■62	8*	6NO+2NC	10
	SH04ZA- ■53	8*	5NO+3NC	10
	SH04ZA- ■44	8*	4NO+4NC	10

Note: * 8-pole type SH-4Y is combination of 4-pole type SH-4Y and 4-pole auxiliary contact block SZ-A■
* Enter the coil voltage code in the ■ mark.

Shipping state (Fig. 1)

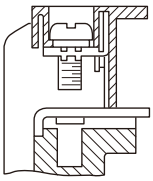

When one crimp terminal is used (Fig. 2)

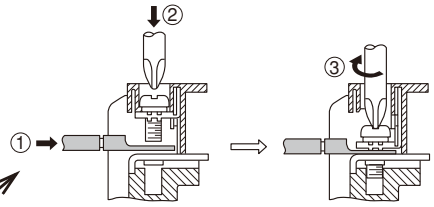

When two crimp terminals are used (Fig. 3)

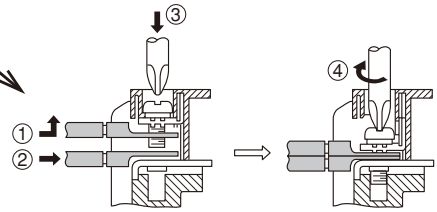

■ Ordering information

Specify the following
1. Ordering code

■ Dimensions, mm

SH-4Y (4-pole)

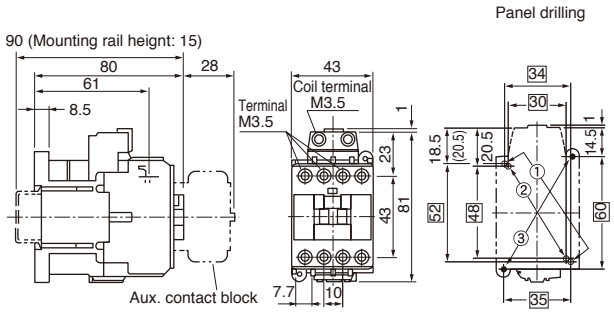

Mass: 0.32kg

SH-4Y (8-pole)

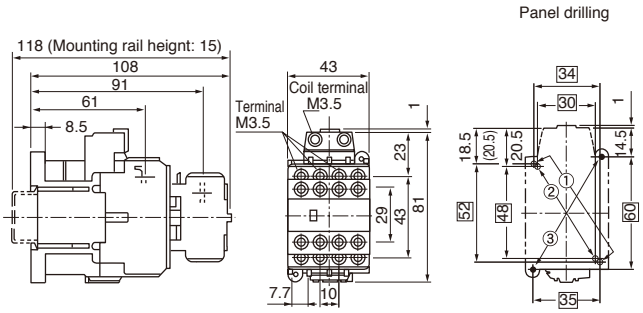

Mass: 0.36kg

■ Contact arrangement

Same as standard type.
See page C2-5.

Notes on panel drilling
- Use the two mounting holes on a diagonal line to mount a relay.
- Mounting holes indicated by ① and ② are compatible with those of SRC type.
- Mounting holes indicated by ③ conform to IEC Standards.

Industrial Control Relays
Card relay RB104,105

DC operated slim type card relays
Rated thermal currrent 5 Amps.

■ Description

The RB104 and 105 relays are designed for printed circuit board use.
These relays are extremely thin (5mm) and so, can be densely mounted on PC boards. As a result, PC board size and cost can be greatly reduced.
Employing of bifurcated contacts ensure high contact reliability, allowing the RB104,105 relays to be used in low-level circuits.
Coil voltages are available in ranges from 4.5V to 24V DC.

■ Features

- Thin, miniature size and light weight
  The mounting space on the PC board can be reduced.
- UL, CSA and TÜV approved
- Low power consumption
  They can be operated by means of non-polarity magnet.
- SIL terminal arrangement
  SIL (Single-side In-Line lead) package allows the relays to be mounted easily on PC board.
- Fluxtight construction
- Immersion cleanable

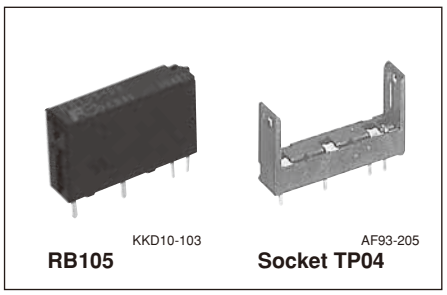

■ Ordering information

Specify the following:
1. Type number

■ Type number nomenenclature

RB 10 4-DE

- **Operating coil voltage**
  DC: 4.5 V DC
  DY: 5V DC
  DA: 6V DC
  DD: 9V DC
  DB: 12V DC
  DE: 24V DC
- **Watt loss**
  4: 120mW
  5: 200mW
- **Contact arrengement**
  10: 1NO
- **Basic type**

■ Types and ratings

Type	Ordering code	Power consumption	Rated voltage	Pick-up voltage	Thermal current	Make and break current (res.load)
RB104	RB104-■	120mW	4.5, 5, 6 ,9,12 24V	70% of rated voltage or less	5A	5A at 250V AC 5A at 30V DC
RB105	RB105-■	200mW				

Note: Enter the coil voltage code in the ■ mark as follow
4.5V DC: DC, 5V DC: DY, 6V DC: DA, 9V DC: DD, 12V DC: DB, 24V DC: DE

■ Approvals

- UL, CSA and TÜV
  UL file No. E44592
  CSA file No. LR20479
  TÜV license No. R9551729

• Ratings

Voltage	Resistive load	Inductive load
120V AC	–	1A
240V AC	5A	–
30V DC	5A	2A (15ms)
120V DC	0.5A	0.2A (15ms)

■ Specifications

Operating time		10ms or less at rated voltage
Release time		5ms or less at rated voltage
Dielectric strength		750V AC rms. 1 min. between open contacts 2,000V AC rms. 1 min. between contact and coil
Stray electrostatic capacity		Approx. 1.4pF between contact and coil
Impulse		4,500V or more 1.2 × 50μs between contact and coil
Insulation resistance		100MΩ at 500V DC megger
Electrical durability	AC	100,000 operations at 220V AC 2A, inductive load 130,000 operations at 220V AC 3A, resistive load
	DC	150,000 operations at 24V DC 1A, inductive load 100,000 operations at 24V DC 5A, resistive load
Mechanical durability		20 million operations
Ambient temperature		-40°C to +70°C(no icing)

■ Dimensions, mm

RB104,105

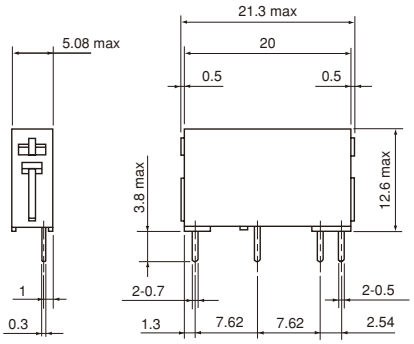

PC board drilling (View from back side)

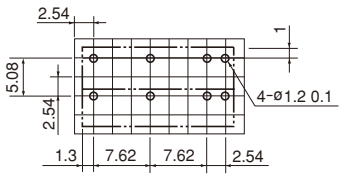

Internal wiring diagram

Mass: 3g

Socket TP04

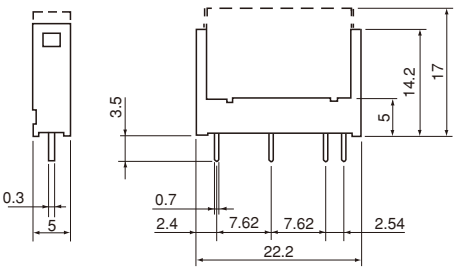

PC board drilling (View from back side)

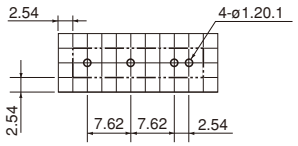

Industrial Control Relays
Relays-and-terminal module RS type

Relays-and-terminal module RS4□, 6N

A very compact, space-saving terminal module containing four or six relays with one NO contact.

■ Features

- The RS series relays-and-terminal module consists of four or six plug-in relays (RB105, 1NO contact or RB011, 1NC contact) and a terminal module with screw terminals. This relays-and-terminal module is ideal for interfacing electronic control devices (such as PLCs or photoelectric sensors) with output devices (such as solenoid valves and magnetic contactors).
- The use of ultra-small, high-sensitive relays has realized a compact size of 34mm wide and 69mm long, including screw terminals (RS4N type).
- Input terminals are located in the upper part and output terminals in the lower part of the module to separate them from each other, thereby making wiring easy.
- The terminal module uses RB105 or RB101 card relays. For replacement, please specify the card relay type and coil voltage.
- Built-in coil-surge suppression diodes and operation indicator LEDs simplify circuit design and maintenance. The module is quickly-mountable on a DIN 35mm rail.
- The RS4N module includes two standard accessory jumper plates, which are convenient for common wiring of terminals.

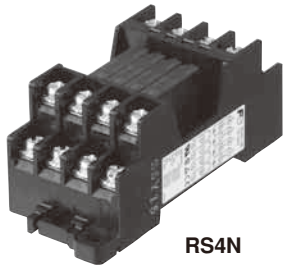

RS4N

KKD06-058

■ Type number nomenclature

RS 4N-DE P

- **Connector side polarity (For RS6N type only)**
  - NPN type (+common): Blank
  - PNP type (-common): P
- **Rated voltage**
  - DC: 4.5V DC
  - DY: 5V DC
  - DA: 6V DC
  - DD: 9V DC
  - DB: 12V DC
  - DE: 24V DC
- **Output contact**
  - 4N: 4NO
  - 41: 3NO+1NC
  - 42: 2NO+2NC
  - 6N: 6NO
- **Relay and terminal**

■ Specifications

Type	RS4N, RS41, RS42, RS6N, RS6NP	
Contact	1NO	1NC
Contact resistanc Contact material	30mΩ or less (before use) Silver alloy (Au-plated)	
Min. operating voltage and current	0.1V DC, 1mA	1V DC, 1mA
Rated thermal current	5A	
Max. make/break current	250V AC, 5A 30V DC, 5A	250V AC, 1A 30V DC, 1A
Operating time Release time Insulation resistance Dielectric strength: Between contact and coil Between contacts of same pole Between contacts of different pole Between coils of different pole	10ms. or less at rated voltage 10ms. or less at rated voltage 100MΩ (at 500V DC megger) 2000V AC 1 minute 750V AC 1 minute 2000V AC 1 minute 500V AC 1 minute	
Vibration: Malfunction durability Mechanical durability Shock: Malfunction durability Mechanical durability	10 to 55Hz, 1mm double amplitude 10 to 55Hz, 1.5mm double amplitude 100m/s^2 1000m/s^2	
Durability: Mechanical Electrical	20 million operations *See page C2-17*	
Ambient temperature	-25 to +55 C (no icing)	

■ Operating coil of card relays

Relay	Coil voltage	Pick-up voltage	Drop-out voltage	Power consumption	Coil resistance
RB105 (1NO)	4.5V DC 5V DC 6V DC 9V DC 12V DC 24V DC	70% or less of rated coil voltage	5% or more of rated coil voltage	200mW	100Ω 125Ω 180Ω 405Ω 720Ω 2880Ω
RB011 (1NC)	4.5V DC 5V DC 6V DC 9V DC 12V DC 24V DC			360mW	56Ω 70Ω 100Ω 225Ω 400Ω 1600Ω

■ Relay remover

To remove a relay from the terminal module, use the type TY3 relay remover sold separately. Pull the relay in a direction perpendicular to the terminal module surface. Incorrectly removing or mounting a relay may damage the relay pins and pin jacks of the module.

TY3(RZ3A)

AF93-206

■ Ordering information

Specify the following:
1. Type number

Information subject to change without notice

■ Electrical durability

● NO output contact

Voltage	Make current (A)	Break current (A)	Operations
220V AC (inductive load)	20 (cos ϕ = 0.7)	2 (cos ϕ = 0.3 0.4)	100,000
220V AC (resistive load)	3 (cos ϕ = 1.0)	3 (cos ϕ = 1.0)	130,000
24V DC (inductive load)	1 (T= 15ms)	1 (T= 15ms)	150,000
24V DC (resistive load)	5 (T= 1ms or less)	5 (T= 1ms or less)	100,000

● NC output contact

Voltage	Make current (A)	Break current (A)	Operations
220V AC (inductive load)	1 (cos ϕ = 1)	1 (cos ϕ = 1)	100,000
24V DC (inductive load)	1 (L/R = 0ms)	1 (L/R = 0ms)	120,000

■ Dimensions, mm

● RS4N, RS41, RS42 (RS4A, RS4D)

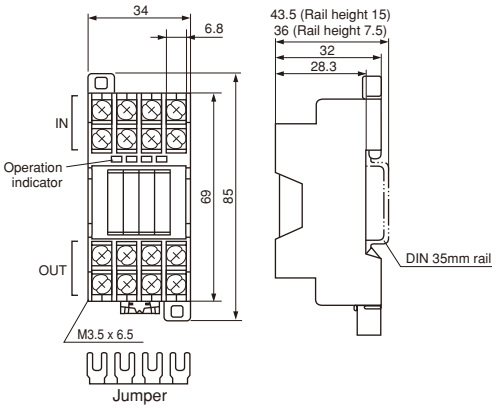

■ Wiring diagrams

● RS4N (4NO)

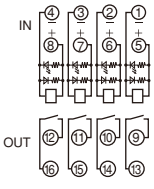

● RS41 (3NO+1NC)

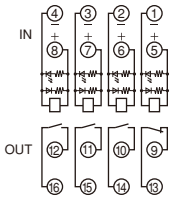

● RS42 (2NO+2NC)

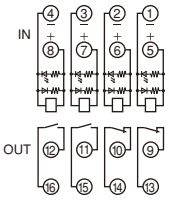

● RS6N, RS6N-P (RS6A, RS6D)

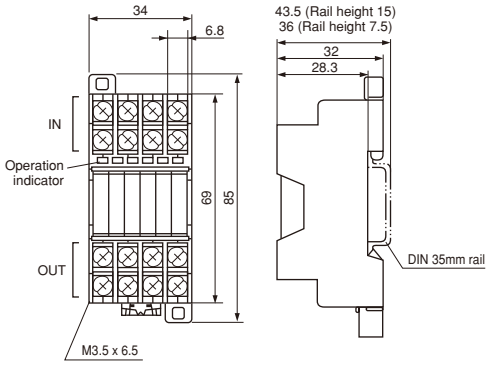

● RS6N (6NO)

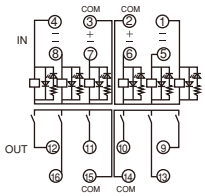

● RS6N-P (6NO)

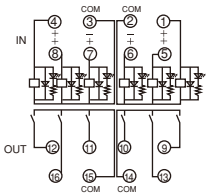

■ Finger protection cover

● RZ4N

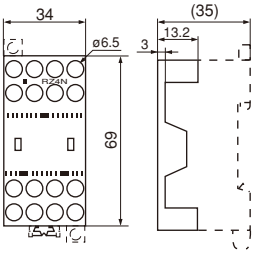

See page C2-23.

Industrial Control Relays
Relays-and-terminal module RS type

Relays-and-terminal module RS16

16-point relays-and-terminal module with the smallest width in its class

■ Features

- Most compact in its class
  Outside dimensions are 110mm (W), 52mm (D), and 37mm (H).
  The width is the smallest in this class.
- Push-to-set (quick-connect) terminals for easy wire connection
  A unique terminal structure enables quick and easy crimp terminal connections without removal of screws. (No more lost screws)
- Clear LEDs indicate relay output status.
  Each relay has an LED to indicate its ON/OFF status.
- A surge suppressing diode is provided for each relay coil.
- Terminal cover with label for marking device Nos.
- Built-in relay remover
- DIN rail quick mount and panel-surface mount using screws

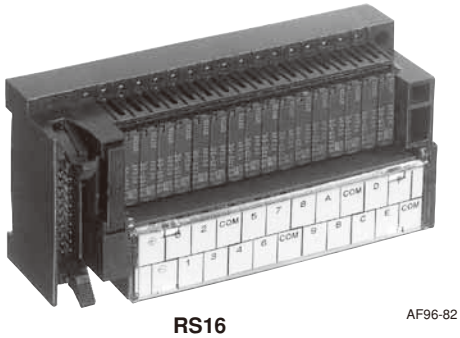

RS16

AF96-82

■ Type number nomenclature

RS 16 E - DE 04 P

Relays and terminal

No. of poles
16: 16-pole

Input/output
E: DC input
Blank: Relay output

Rated voltage
DY: 5V DC
DE: 24V DC

Connector maker
04: Hirose Electric Co., Ltd.

Connector side polarity
Blank: NPN type (+common)
P: PNP type (-common)

■ Ordering information

Specify the following:
1. Type number

■ Types

Type	Input/output	No. of poles	Rated voltage	Connector side polarity
RS16-□04	Output	16(1NO×16)	5V DC 24V DC	NPN type (+common)
RS16-□04P				PNP type (-common)
RS16E-□04	Input			NPN type (+common)

Note: Enter the rated voltage code in the □ mark as follow. 5V DC: DY, 24V DC: DE

■ Ratings

● Operating coil

Rated voltage	Rated operational current (mA)	Coil resistance (Ω)	Pick-up voltage	Drop-out voltage	Power consumption (W)
24V DC	8.3	2,880±10%	70% or less of coil rated voltage	10% or more of coil rated voltage	0.2/1NO contact 3.2/16NO contacts
5V DC	40	125±10%			

Note: An LED flows approx. 1mA. To calculate the power requirements, calculate the total coil and LED currents of all relays installed in the terminal module.

● Contact

Terminal relay type		RS16 (output)	RS16E (input)
Rated current	220V AC (Res. load) 220V AC (Ind. load) 24V DC (Res. load) 24V DC (Ind. load)	2A 2A 2A 2A	– – 1A 1A
Rated thermal current*		2A	1A
Electrical durability (operations) Mechanical durability (operations)		200,000 at 200V AC, 2A 300,000 at 24V DC, 2A 20,000,000	

Note * The contact current rating of the RB105 relay used in this module is 5A. The thermal current rating of this terminal module, however, is 2A or 1A due to limitations of the terminal module (RS16) rating.

Fuji Electric FA Components & Systems Co., Ltd.
Information subject to change without notice

■ Performance data

Operating time		10ms or less
Release time		10ms or less
Vibration	Malfunctions durability	10–55Hz 1mm double amplitude
	Mechanical durability	10–55Hz 1mm double amplitude
Operating ambient temperature		-25–55°C(no icing)
Operating ambient humidity		35-85%RH
Terminal screw size		M3
Tightening torque		0.5–0.7N•m
Mounting		Rail mounting (screw mounting also available)
Applicable crimp terminal		R1.25–3 (Max. 6mm wide)
Applicable wire size		Max. ϕ1.4
LED color	Operation indication Red	Red
	Power source indication	Green
Coil surge suppressor		Diode
Insulation resistance (before use)		100MΩ (500V DC megger)
Dielectric strength	Between contact and coil	2000V AC, 1 minutes
	Between open contacts	750V AC, 1 minutes
	Between contacts of opposite polarity	2000V AC, 1 minutes
Mass		200g

■ Cable types

Type		Cable length	Type (Ordering code)
Cable with applicable crimp terminal (ring)		1,000mm	RS910B1-0104
		2,000mm	RS910B1-0204
		3,000mm	RS910B1-0304
Cable with connectors (1:2)	FUJI ELECTRIC PLC	1,000mm	RS910F2-0104
		2,000mm	RS910F2-0204
		3,000mm	RS910F2-0304
	Mitsubishi electric Corp. PLC	1,000mm	RS910M2-0104
		2,000mm	RS910M2-0204
		3,000mm	RS910M2-0304
	OMRON PLC	1,000mm	RS910T2-0104
		2,000mm	RS910T2-0204
		3,000mm	RS910T2-0304
Cable with connectors (1:1)	Multicore cable	1,000mm	AUX014-201(LP914-201)
		2,000mm	AUX014-202(LP914-202)
		3,000mm	AUX014-203(LP914-203)
	Flat cable	1,000mm	AUX024-201(LP924-201)
		2,000mm	AUX024-202(LP924-202)
		3,000mm	AUX024-203(LP924-203)

Note: The ordering codes of the cables with connectors (1:1) differ from the type.
The ordering codes are in parentheses.

■ Wiring diagrams

● RS16-DE04 (Output, NPN type)

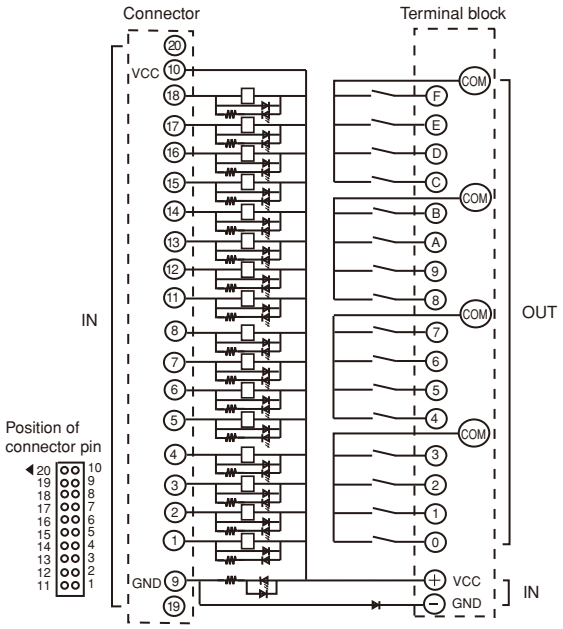

● RS16-DE04P (Output, PNP type)

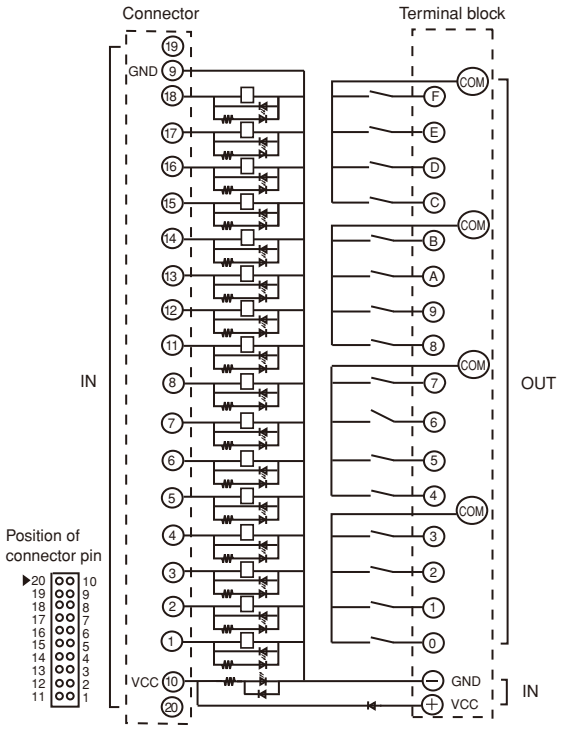

● RS16E-DE04 (Input, NPN type)

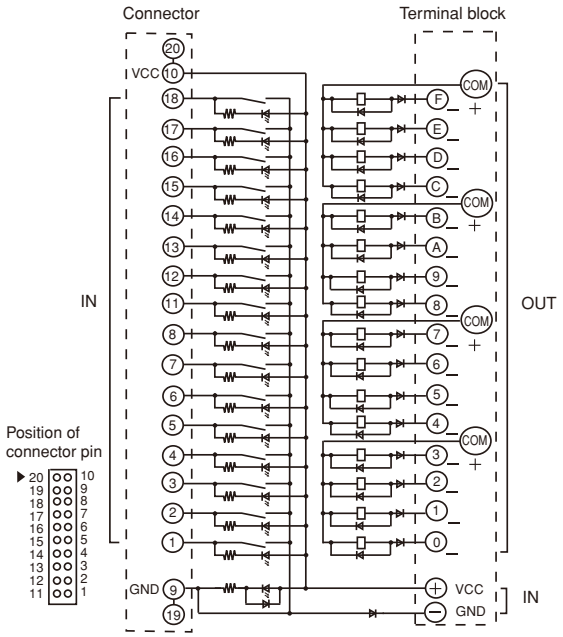

■ How to use a push-to-set terminal (Quick-connect terminal)

Lift the screw head up with a screw driver tip.

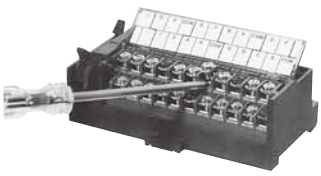

Insert the crimp terminal of the wire into the slot under the screw.

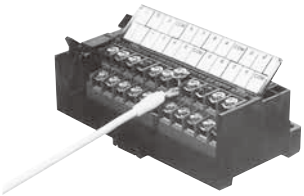

Use a screwdriver to tighten the screw.

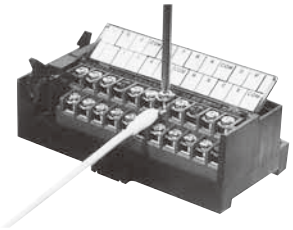

■ Dimensions, mm

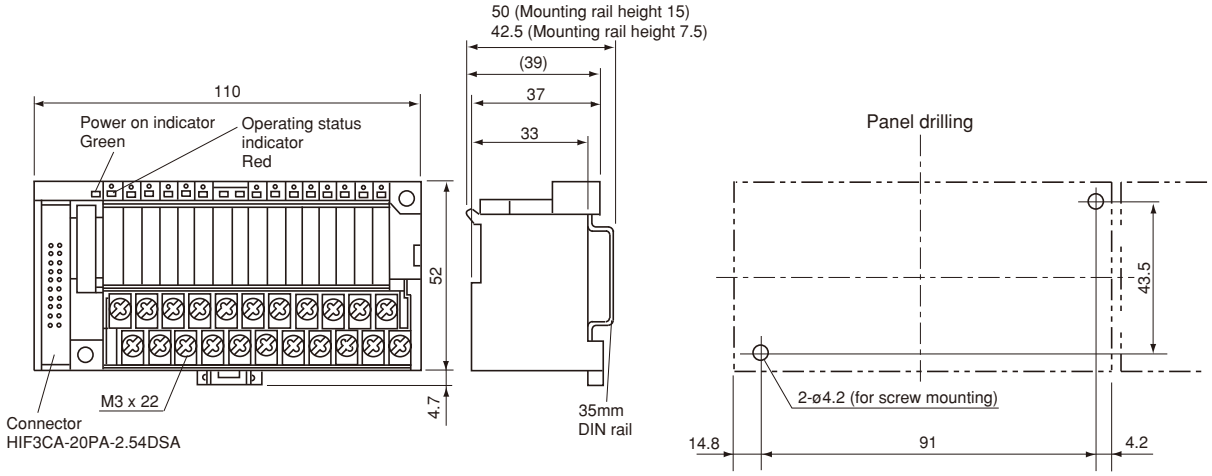

Industrial Control Relays
Relays-and-terminal module RS type

Relays-and-terminal module with SSR output

■ Features

- SSR output (AC and DC)
  Provided with a miniature SSR with the same dimensions as the RB-series miniature card relay resulting in a longer service life and making it ideal for highly frequent switching.
- Slim 34-mm body
  Slim 34-mm design for all models up to 16-pole models allowing significant space savings within the panel.
- Both surface mounting and DIN rail mounting are possible
- Provided with operation indicators
- Easy relay maintenance with special socket (type TP04)
- RZ4N finger protector also available. (Sold separately.)

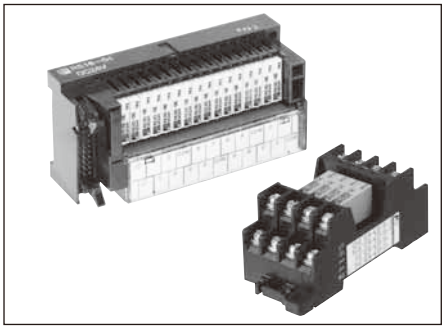

■ Type number nomenclature

RS 4 A - DE

- **Rated voltage**
  DY: 5V DC
  DB: 12V DC
  DE: 24V DC
- **Output**
  A: SSR (AC output)
  D: SSR (DC output)
- **No. of poles**
  4: 4-pole
  6: 6-pole
  16: 16-pole
- **Relays and terminal**

■ Types

Type (Ordering code)	Replace the □ mark by the rated voltage (code)	Output
RS4A-□	5V DC: DY, 12V DC: DB 24V DC: DE	SSR (AC output)
RS4D-□		SSR (DC output)
RS6A-□		SSR (AC output)
RS6D-□		SSR (DC output)
RS16A-□		SSR (AC output)
RS16D-□		SSR (DC output)

■ Ordering information

Specify the following:
1. Type number

■ Specifications

Type		**RS4A, RS6AR**		**RS16A**	**RS4D, RS6D**		**RS16D**
		DC input-AC output			DC input-DC output		
Main circuit (output)	Rated insulation voltage	250V			250V		
	Rated voltage Vn	100–240V AC			24V DC		
	Operating voltage range	70–250V AC			16.8–26.4V DC		
	Rated frequency	50/60Hz			–		
	Rated thermal current	0.3A		0.15A	0.3A		0.15A
	Leakage current at OFF state (max)	1mA or less			0.1mA or less		
	Minimum load current	20mA			1mA		
	Voltage drop at ON state (max)	1.6V or less			1V or less		
	Zero-cross function	–			–		
	Surge-on current	15A (20ms, 1 shot)			3A (10ms, 1 shot)		
Control circuit (input)	Isolation method	Phototriac			Phototriac		
	Rated voltage Vn	5V DC	12V DC	24V DC	5V DC	12V DC	24V DC
	Operating voltage range	3.5–5.5V DC	8.4–13.2V DC	16.8-26.4V DC	3.5–5.5V DC	8.4–13.2V DC	16.8-26.4V DC
	Pick-up voltage	70%Vn or less			70%Vn or less		
	Drop-out voltage	10%Vn or more			10%Vn or more		
	Input impedance	Approx.390Ω	Approx.1kΩ	Approx.2.7kΩ	Approx.390Ω	Approx.1kΩ	Approx.2.7kΩ
General specification	Ambient temperature (operate)	-25 – +55°C (no icing)			-25 – +55°C (no icing)		
	Ambient temperature (storage)	-25 – +80°C (no condensation)			-25 – +80°C (no condensation)		
	Relative humidity	35 – 85%RH			35 – 85%RH		
	Dielectric strength	Between input and output terminals 2000V AC 1 min.			Between input and output terminals 2000V AC 1 min.		
	Insulation resistance	Over 100MΩ at 500V DC megger			Over 100MΩ at 500V DC megger		
	Operating time	1ms or less			1ms or less		
	Release time	1/2 cycle +1ms or less			1ms or less		
	Vibration resistance	10 – 55Hz, 1.5mm double amplitude		1mm	10 – 55Hz, 1.5mm double amplitude		1mm
	Shock resistance	100m/s²			100m/s²		
	Mass	Approx. 64g		Approx. 200g	Approx. 64g		Approx. 200g

Fuji Electric FA Components & Systems Co., Ltd.
Information subject to change without notice

■ Dimensions, mm

● **RS4A, 4D**
Same as RS4N
See page C2-17

● **RS6A, 6D**
Same as RS6N
See page C2-17

● **RS16A, 16D**
Same as RS16
See page C2-21

■ Wiring diagrams

● **RS4A**

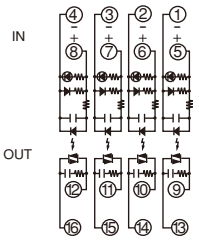

● **RS6A**

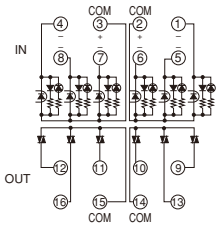

● **RS4D**

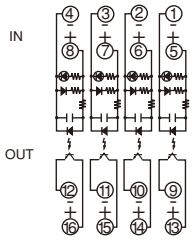

● **RS6D**

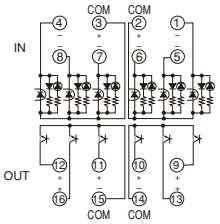

● **RS16A**

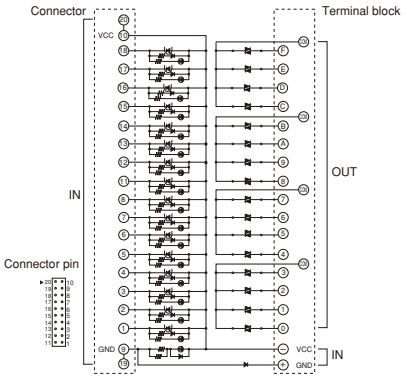

● **RS16D**

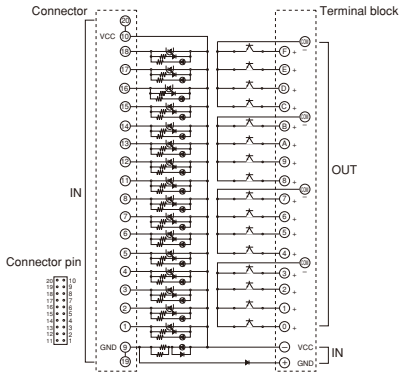

RZ finger protection cover for RS series relays-and-terminal module

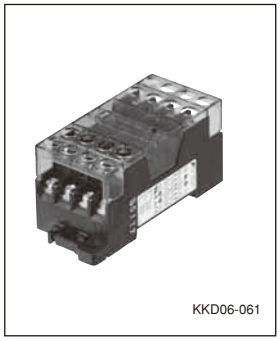

■ Features

- Ensures safety and prevent dust
  This cover prevent persons from touching, by mistake, live conductor parts of the terminal module and receiving an electric shock. The cover also protect relays from dust.
- Hold the relay remover
  The cover surface has two holes to hold the type TY3 relay remover. When the remover is not being used, it can be attached to the cover so that it is not lost.
- The cover is quick-mount
  The cover can be quickly mounted on or removed from the TP04 socket used with RS series relays-and-terminal module.
- The cover can be mounted at any time
  The cover can be mounted on or removed from the socket at any time before or after wiring the terminals.
- Crimp terminal is also available
  It is possible to use a crimp terminal as well as terminal jumper for wiring.

■ Type

Type	Used with
RZ4N	RS4N, 4-pole relays-and-terminal module RS6N, 6-pole relays-and-terminal module

■ Dimensions, mm

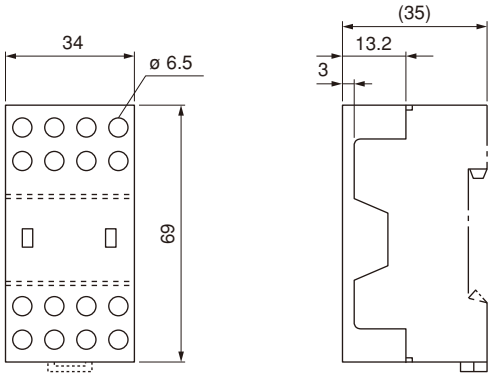

Mass: Approx. 3.2g

Industrial Control Relays
Relays-and-terminal module RS type

■ Notes on use

● Mounting direction

This product can be mounted in any direction. However, to mount the product in a direction which each relay is horizontal, it is recommended that the product will be mounted so that the cable connector is positioned at the bottom. This position ensures the optimal vibration resistance of the relay. Use optional end clamps (TS-XT) as needed to prevent the relays-and-terminal module from failing off and to ensure correct positioning of the relays.

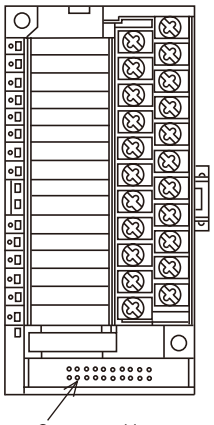

● Installing and removing a relay

Installing a relay: While holding the relay perpendicular to the socket, insert the relay into the socket as shown below. Incorrect insertion may bend the relay terminals or damage the socket.
Removing a relay: Use the accessory remover to remove the relay from the socket.

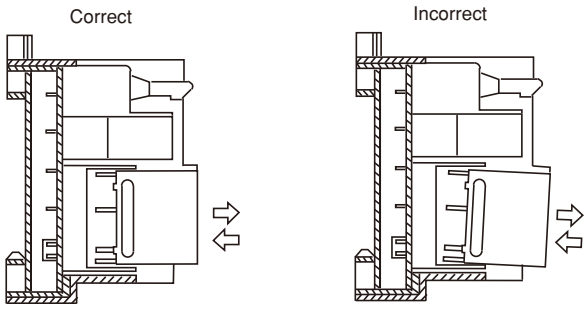

● Component relay

This product uses the RB105 series of card relays as components. When replacing a relay, use a relay of the same type with the same voltage rating as that of the original.

● Make spaces between nearby devices

When mounting this product on a panel, be sure there is adequate space between the product and nearby devices and cable ducts, as shown in the figure at right.
This space enables operation of the connector-ejecting levers.

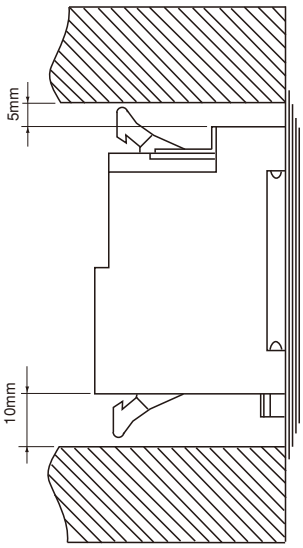

● Applicable cable connectors

Use Fuji Electric's connectors for cable connections (optional). Use of any other connector may damage the module connector or cause faulty connections.

Miniature control relays

■ Description

The HH52, 53 and 54 are a series of miniature general purpose relays specially designed for users demanding small size, sturdy construction and high electrical capacity. Mechanisms are furnished in polycarbonate dust-proof enclosures and are recommended for a multitude of electrical control applications for their reliability and compact size. Continuous duty coils, either AC or DC are available for voltages up to 240V AC or 120V DC. Contacts can be supplied in 2PDT, 3PDT, 4PDT arrangements. Continuous current ratings are 3, 5 and 7 Amps. Many terminal types are available for solder, plug-in or printed circuit board mounting.

■ Features

- 3, 5 and 7 Amp. contacts
- 2PDT, 3PDT and 4PDT
- Reliable operation, long service life
- High dielectric strength
- Solder, PC board, wire wrap and screw terminal socket
- AC or DC coils
- Barriered contacts for opposite polarity available
- Dust proof enclosures
- Approved by UL, CSA and TÜV
  UL recognized File No:
  E42419, E90265 (Socket)
  CSA: LR 20479
  TÜV:
  License No. R9251339 (HH52)
  R9251340 (HH53)
  R9251341 (HH54)
  T9251612 (TP58, 511, 514)
  T9251425 (RZ, FX)

■ General information

● Contacts

Miniature relays can be supplied with contacts that meet most electrical and mechanical contact requirements. The standard HH52, 53 and 54 series are of the single contact type as illustrated.
The HH52W (2PDT) and HH54W (4PDT) relays are supplied with bifurcated contacts. These bifurcated contacts are with good conducting characteristics and are recommended where limited control power is available.
The dielectric strength is 1000 volts rms 50/60Hz (between open contacts) which makes them more than adequate for power circuit use.

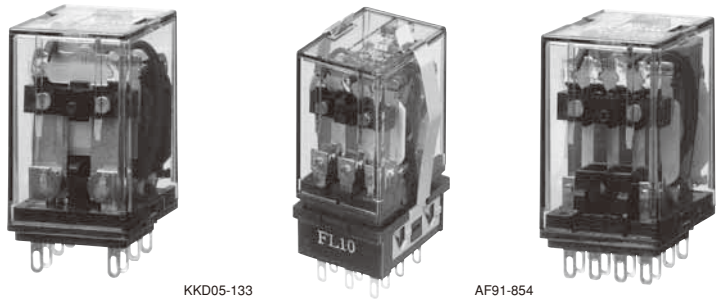

KKD05-133 AF91-854 KKD05-132

HH52P **HH53P** **HH54P**

Contact arrangement are as follows:

Type	Contact arrangement	Rated thermal current
HH52U	2PDT	7 Amps
HH52, 52W	2PDT	5 Amps
HH53	3PDT	5 Amps
HH54U	4PDT	5 Amps
HH54, 54W	4PDT	3 Amps

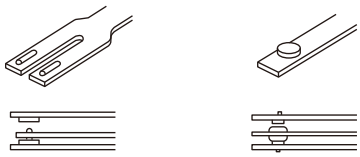

Bifurcated contact **Single contact**

● Coils

Coils are available with nominal voltages within the following ranges.

Coil voltage	Power consumption
6 to 120V DC	Approx. 0.9W
6 to 240V AC (50/60Hz)	Approx. 1.0VA (60Hz)

Special purpose relays can be supplied with diode for surge suppression, for operating display devices such as LED's, and magnetically held type.

● Enclosures

All miniature relays are enclosed in sturdy heat-resistant polycarbonate covers providing protection against dust and dirt.

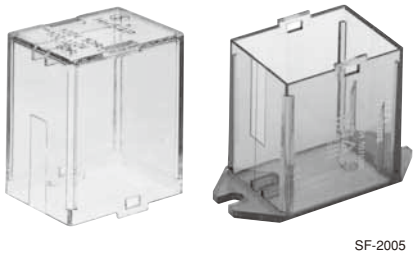

SF-2005

Standard **Flange mounting**

● Terminals

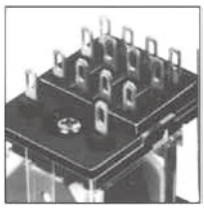

Plug-in type terminal

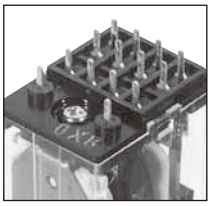

SF-2006

PC board type terminal

● Sockets

There is almost infinite choise of sockets. They can be adapted to all types of wiring including solder type, standard screw terminals, wire wrap and printed circuit. Sockets for rail mounting use are also available.

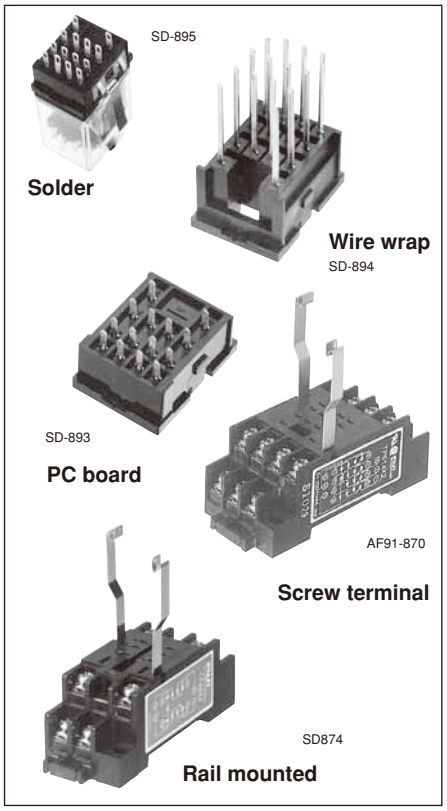

SD-895
Solder
Wire wrap
SD-894
SD-893
PC board
AF91-870
Screw terminal
SD874
Rail mounted

Industrial Control Relays
Miniature control relays HH52, 53, 54

■ Versions

Operating status indicator
All relays can be supplied on request with a visual indicating signal-a light emitting diode (LED).
LED's are fitted to relays with nominal operating voltages up to 240 volts.
The LED emits highly visible red light for AC and green light for DC when power is applied to the relay coil, an extremely useful signal when trouble shooting either equipment or a system.

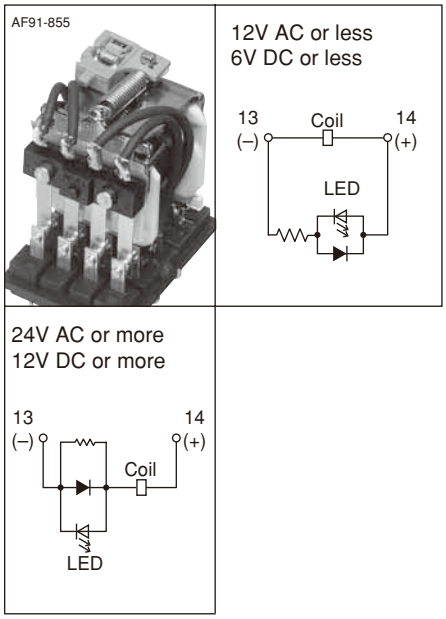

Surge suppression

We can also supply relays with a diode (or CR) for surge suppression. The highly efficient diode (or CR) is connected in parallel with the coil in order to suppress the surge generated within the coil.
Consequently this coil can be used in electric circuits which include highly sensitive relays or transistors, etc.
without interfering with their operation, so increasing the dependability of the equipment.

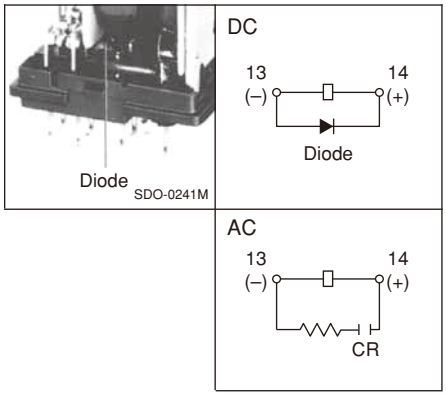

With operation indicator and surge suppression device

This type has a built-in operation indicator and suge suppressor.

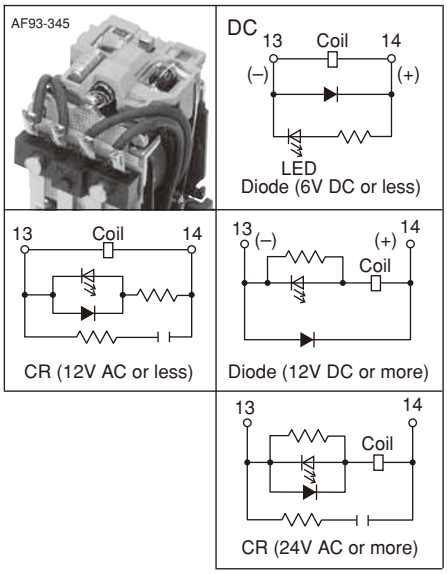

With extra pick-up operating coil

This type is recommended for use in poor power supply environments.

Pick-up voltage:	65% of rated voltage (at 20°C)
Drop-out voltage:	10% of rated voltage (at 20°C)
Mechanical durability:	10 million operations

Other specifications are the same as those of the basic model.

High capacity type

This type is suitable for switching a load like solenoid . The current rating of the contacts is 7A for HH52PU and 5A for HH54PU. Other specifications are the same as those of the basic model.

With Au-plated Ag contact

Type HH □-J has gold-plated contacts. (Note: Models with bifurcated contacts and 4PDT high-capacity models are provided with gold-plated contacts as standard, even if their type number has no J.)

Dual coil magnetically held

One coil firmly holds the contacts in one position, the second coil releases them. This relay has a good memory stability because it will maintain the ON condition during loss of power. It operates on a momentary pulse to either coil. The relay saves space as well as power, since a single unit occupies half the space of a mechanically interlocking latching relay of the same rating.
Voltages: 6V-110V AC, 6V-48V DC

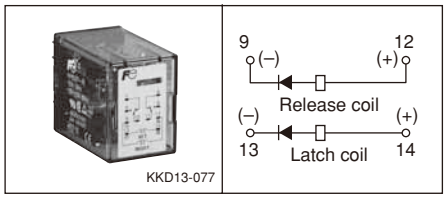

■ Ordering code system

● Relay

R M 2C P W R F-AH
① ② ③④ ⑤ ⑥ ⑦ ⑧ ⑨⑩

① Product category

Code	Description
R	Control relay

② Series category

Code	Description
M	Miniature control relay (HH52 to HH54)
P	
C	Miniature power relay (HH62 to HH64)
	General purpose relay (HH22 to HH24)

③④ Contact arrangement

Code ③	Code ④	Contact arrangement
2	C	2PDT
3	C	3PDT
4	C	4PDT
3	M	1NO+1NC+SPDT
4	M	2NO+1NC+SPDT
4	2	2PDT with extra pick-up coil

⑤ Mounting

Code	Mounting
P	Plug-in mounting
B	PC board mounting
S	Flange mounting

⑥ Contact form

Code	Form
Blank	Single
W	Bifurcated
U	High capacity (HH52, 54)
J	Single (Au-plated)

⑦ Version

Code	Description
Blank	Standard
R	Magnetically held

⑧ Accessory

Code	Description
Blank	Not provided
F	With surge suppression diode (DC)
G	With LED indicator and surge suppression diode (DC)
L	With LED indicator
C	With surge suppression (CR)
A	With LED indicator and surge suppression CR (AC)

⑨⑩ Operating coil

Code ⑨	Code ⑩	Coil voltage
A	A	6V AC 50/60Hz
A	B	12V AC 50/60Hz
A	E	24V AC 50/60Hz
A	F	48V AC 50/60Hz
A	1	100–110V AC 50/60Hz
A	H	110–120V AC 50/60Hz
A	2	200–220V AC 50/60Hz
A	M	220–240V AC 50/60Hz
D	A	6V DC
D	B	12V DC
D	E	24V DC
D	F	48V DC
D	1	100–110V DC

● Socket

R X 58 X2 - CR ZT
① ② ③④ ⑤⑥ ⑦⑧ ⑨⑩

① Product category

Code	Description
R	Control relay

② Series category

Code	Description
X	Socket

③④ Application

Code ③	Code ④	Type
5	8	TP58 (For HH52P)
5	1	TP511 (For HH53P)
5	4	TP514 (For HH54P)
6	8	TP68 (For HH62P)
6	1	TP611 (For HH63P)
6	4	TP614 (For HH64P)
8	G	8GB (For HH22P)
3	8	TP38 (For HH22P)
1	G	11GB (For HH23P)
3	1	TP311 (For HH23P)

⑤⑥ Mounting and wiring

Code ⑤	Code ⑥	Description
Blank		Soldering
B	1	PC board
R	2	Wire wrap
		Surface mounting screw terminal (M3.5)
S	0	For HH22, 23, 24
		Rail mounting screw terminal (M3.5)
X	0	For HH22, 23, 24
X	2	For HH52, 53, 54, HH62, 63, 64
		Rail mounting screw terminal (M3)
X	1	For HH52, 53, 54

⑦⑧ Socket with surge suppression device

Code ⑦	Code ⑧	Description
C	R	Provided with CR circuit
C	1	Provided with 100V Z-trap (diode)
C	2	Provided with 200V Z-trap (diode)

⑨⑩ Approvals

Code ⑨	Code ⑩	Standards
Z	U	UL
Z	S	UL/CSA
Z	T	TÜV
Z	L	Lloyd

Industrial Control Relays
Miniature control relays HH52, 53, 54

■ Versions

Relay

Classification		Contact form and arrangement		Mounting Plug-in Type	Ordering code	PC board Type	Ordering code	Flange Type	Ordering code
Standard	Without LED	Single	2PDT	**HH52P**	RM2CP-■	**HH52B**	RM2CB-■	**HH52S**	RM2CS-■
			3PDT	**HH53P**	RM3CP-■	**HH53B**	RM3CB-■	**HH53S**	RM3CS-■
			4PDT	**HH54P**	RM4CP-■	**HH54B**	RM4CB-■	**HH54S**	RM4CS-■
		Bifurcated	2PDT	**HH52PW**	RM2CPW-■	**HH52BW**	RM2CBW-■	**HH52SW**	RM2CSW-■
			4PDT	**HH54PW**	RM4CPW-■	**HH54BW**	RM4CBW-■	**HH54SW**	RM4CSW-■
	With LED	Single	2PDT	**HH52P-L**	RM2CPL-■	**HH52B-L**	RM2CBL-■		
			3PDT	**HH53P-L**	RM3CPL-■	**HH53B-L**	RM3CBL-■		
			4PDT	**HH54P-L**	RM4CPL-■	**HH54B-L**	RM4CBL-■		
		Bifurcated	2PDT	**HH52PW-L**	RM2CPWL-■	**HH52BW-L**	RM2CBWL-■		
			4PDT	**HH54PW-L**	RM4CPWL-■	**HH54BW-L**	RM4CBWL-■		
	With surge suppression diode	Single	2PDT	**HH52P-F**	RM2CPF-■	**HH52B-F**	RM2CBF-■	**HH52S-F**	RM2CSF-■
			3PDT	**HH53P-F**	RM3CPF-■	**HH53B-F**	RM3CBF-■	**HH53S-F**	RM3CSF-■
			4PDT	**HH54P-F**	RM4CPF-■	**HH54B-F**	RM4CBF-■	**HH54S-F**	RM4CSF-■
		Bifurcated	2PDT	**HH52PW-F**	RM2CPWF-■	**HH52BW-F**	RM2CBWF-■	**HH52SW-F**	RM2CSWF-■
			4PDT	**HH54PW-F**	RM4CPWF-■	**HH54BW-F**	RM4CBWF-■	**HH54SW-F**	RM4CSWF-■
	With surge suppression diode and LED	Single	2PDT	**HH52P-FL**	RM2CPG-■	**HH52B-FL**	RM2CBG-■		
			3PDT	**HH53P-FL**	RM3CPG-■	**HH53B-FL**	RM3CBG-■		
			4PDT	**HH54P-FL**	RM4CPG-■	**HH54B-FL**	RM4CBG-■		
		Bifurcated	2PDT	**HH52PW-FL**	RM2CPWG-■	**HH52BW-FL**	RM2CBWG-■		
			4PDT	**HH54PW-FL**	RM4CPWG-■	**HH54BW-FL**	RM4CBWG-■		
	With surge suppression CR	Single	2PDT	**HH52P-CR**	RM2CPC-■	**HH52B-CR**	RM2CBC-■	**HH52S-CR**	RM2CSC-■
			3PDT	**HH53P-CR**	RM3CPC-■	**HH53B-CR**	RM3CBC-■	**HH53S-CR**	RM3CSC-■
			4PDT	**HH54P-CR**	RM4CPC-■	**HH54B-CR**	RM4CBC-■	**HH54S-CR**	RM4CSC-■
		Bifurcated	2PDT	**HH52PW-CR**	RM2CPWC-■	**HH52BW-CR**	RM2CBWC-■	**HH52SW-CR**	RM2CSWC-■
			4PDT	**HH54PW-CR**	RM4CPWC-■	**HH54BW-CR**	RM4CBWC-■	**HH54SW-CR**	RM4CSWC-■
	With surge suppression CR and LED	Single	2PDT	**HH52P-CRL**	RM2CPA-■	**HH52B-CRL**	RM2CBA-■		
			3PDT	**HH53P-CRL**	RM3CPA-■	**HH53B-CRL**	RM3CBA-■		
			4PDT	**HH54P-CRL**	RM4CPA-■	**HH54B-CRL**	RM4CBA-■		
		Bifurcated	2PDT	**HH52PW-CRL**	RM2CPWA-■	**HH52BW-CRL**	RM2CBWA-■		
			4PDT	**HH54PW-CRL**	RM4CPWA-■	**HH54BW-CRL**	RM4CBWA-■		
	Magnetically held	Single	2PDT	**HH52P-R**	RM2CPR-■	**HH52B-R**	RM2CBR-■	**HH52S--R**	RM2CSR-■
		Bifurcated	2PDT	**HH52PW-R**	RM2CPWR-■	**HH52BW-R**	RM2CBWR-■	**HH52SW-R**	RM2CSWR-■
High capacity	Without LED	Single	2PDT	**HH52PU**	RM2CPU-■	**HH52BU**	RM2CBU-■	**HH52SU**	RM2CSU-■
			4PDT	**HH54PU**	RM4CPU-■	**HH54BU**	RM4CBU-■	**HH54SU**	RM4CSU-■
	With LED	Single	2PDT	**HH52PU-L**	RM2CPUL-■	**HH52BU-L**	RM2CBUL-■		
			4PDT	**HH54PU-L**	RM4CPUL-■	**HH54BU-L**	RM4CBUL-■		
	With surge suppression diode	Single	2PDT	**HH52PU-F**	RM2CPUF-■	**HH52BU-F**	RM2CBUF-■	**HH52SU-F**	RM2CSUF-■
			4PDT	**HH54PU-F**	RM4CPUF-■	**HH54BU-F**	RM4CBUF-■	**HH54SU-F**	RM4CSUF-■
	With surge suppression diode and LED	Single	2PDT	**HH52PU-FL**	RM2CPUG-■	**HH52BU-FL**	RM2CBUG-■		
			4PDT	**HH54PU-FL**	RM4CPUG-■	**HH54BU-FL**	RM4CBUG-■		
	With surge suppression CR	Single	2PDT	**HH52PU-CR**	RM2CPUC-■	**HH52BU-CR**	RM2CBUC-■	**HH52SU-CR**	RM2CSUC-■
			4PDT	**HH54PU-CR**	RM4CPUC-■	**HH54BU-CR**	RM4CBUC-■	**HH54SU-CR**	RM4CSUC-■
	With surge suppression CR and LED	Single	2PDT	**HH52PU-CRL**	RM2CPUA-■	**HH52BU-CRL**	RM2CBUA-■		
			4PDT	**HH54PU-CRL**	RM4CPUA-■	**HH54BU-CRL**	RM4CBUA-■		

Notes:
1. UL, CSA, and TÜV approved.
2. Bifurcated contacts are all gold-plated silver contacts.
3. Enter the coil voltage code in the ■ mark.
4. For types with single contact other than high-capacity types, types with gold-plated silver contact are available on request. To order these types, add J to the ordering code. Refer to the ordering code system.
   Example: RM2CPJ-■ (with gold-plated silver contact)
   RM2CP-■ (with silver contact: standard)

Classification		Contact form and arrangement	Mounting Plug-in Type	Ordering code	PC board Type	Ordering code	Flange Type	Ordering code
With extra pick-up coil	Without LED	Single 2PDT	**HH54-2P**	RM42P-■	**HH54-2B**	RM42B-■	**HH54-2S**	RM42S-■
		Bifurcated 2PDT	**HH54-2PW**	RM42PW-■	**HH54-2BW**	RM42BW-■	**HH54-2SW**	RM42SW-■
	With LED	Single 2PDT	**HH54-2P-L**	RM42PL-■	**HH54-2B-L**	RM42BL-■		
		Bifurcated 2PDT	**HH54-2PW-L**	RM42PWL-■	**HH54-2BW-L**	RM42BWL-■		
	With surge suppression diode	Single 2PDT	**HH54-2P-F**	RM42PF-■	**HH54-2B-F**	RM42BF-■	**HH54-2S-F**	RM42SF-■
		Bifurcated 2PDT	**HH54-2PW-F**	RM42PWF-■	**HH54-2BW-F**	RM42BWF-■	**HH54-2SW-F**	RM42SWF-■
	With surge suppression diode and LED	Single 2PDT	**HH54-2P-FL**	RM42PG-■	**HH54-2B-FL**	RM42BG-■		
		Bifurcated 2PDT	**HH54-2PW-FL**	RM42PWG-■	**HH54-2BW-FL**	RM42BWG-■		
	With surge suppression CR	Single 2PDT	**HH54-2P-CR**	RM42PC-■	**HH54-2B-CR**	RM42BC-■	**HH54-2S-CR**	RM42SC-■
		Bifurcated 2PDT	**HH54-2PW-CR**	RM42PWC-■	**HH54-2BW-CR**	RM42BWC-■	**HH54-2SW-CR**	RM42SWC-■
	With surge suppression CR and LED	Single 2PDT	**HH54-2P-CRL**	RM42PA-■	**HH54-2B-CRL**	RM42BA-■		
		Bifurcated 2PDT	**HH54-2PW-CRL**	RM42PWA-■	**HH54-2BW-CRL**	RM42BWA-■		

Notes:
- Bifurcated contacts are all gold-plated silver contacts.
- Enter the coil voltage code in the ■ mark.
- For types with single contact other than high-capacity types, types with gold-plated silver contact are available on request. To order these types, add J to the ordering code. Refer to the ordering code system.

Example: RM2CPJ-■ (with gold-plated silver contact)
RM2CP-■ (with silver contact: standard)

Industrial Control Relays
Miniature control relays HH52, 53, 54

■ Sockets

Description	Standard *			With surge suppression device							Used with
				CR circuit		100V Z-trap		200V Z-trap			
	Type	Ordering code	Mass (g)	Type	Ordering code	Type	Ordering code	Type	Ordering code	Mass (g)	
Soldering	**TP58**	RX58	9	–	–	–	–	–	–		HH52P
	TP511	RX51	10	–	–	–	–	–	–		HH53P
	TP514	RX54	10	–	–	–	–	–	–		HH54P
PC board	**TP58B**	RX58B1	9	–	–	–	–	–	–		HH52P
	TP511B	RX51B1	9.5	–	–	–	–	–	–		HH53P
	TP514B	RX54B1	9.5	–	–	–	–	–	–		HH54P
Wire wrap	**TP58R2**	RX58R2	10.5	–	–	–	–	–	–		HH52P
	TP511R2	RX51R2	11.5	–	–	–	–	–	–		HH53P
	TP514R2	RX54R2	12.5	–	–	–	–	–	–		HH54P
Rail mounting screw terminal M3.5	**TP58X2**	RX58X2	49	TP58X2-CR	RX58X2-CR	TP58X2-Z/100	RX58X2-C1	TP58X2-Z/200	RX58X2-C2	49	HH52P
	TP511X2	RX51X2	50	TP511X2-CR	RX51X2-CR	TP511X2-Z/100	RX51X2-C1	TP511X2-Z/200	RX51X2-C2	50	HH53P
	TP514X2	RX54X2	62	TP514X2-CR	RX54X2-CR	TP514X2-Z/100	RX54X2-C1	TP514X2-Z/200	RX54X2-C2	62	HH54P
Rail mounting screw terminal M3.0	**TP58X1**	RX58X1	32	TP58X1-CR	RX58X1-CR	–	–	–	–	32	HH52P
	–	–	–	–	–	–	–	–	–	–	–
	TP514X1	RX54X1	49	TP514X1-CR	RX54X1-CR	–	–	–	–	49	HH54P

Note: *UL, CSA and TÜV approved

C2

■ Mounting plates and rails

Type	Ordering code	Socket capacity* (Max.)
TX01	RZ01	1 pc.
TX16	RZ16	16 pcs.
TX19	RZ19	19 pcs.
TX18C	RZ18C	18 pcs.
TX36C1	RZ36C1	36 pcs.

Mounting plate

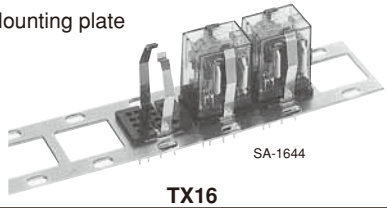

TX16

Mounting rail 900mm

TH35-7.5AL	RR7A
TH35-15AL	RR15A

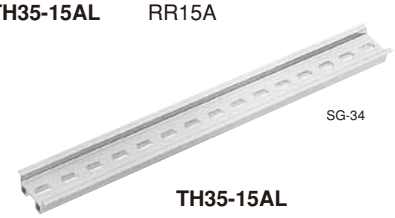

TH35-15AL

Minimum ordering quantity: 10 pcs. (1 pack)

Notes: Plates will accept both soldering terminal and wire wrap terminal sockets.
* No. of relays to be mounted directly.

■ Type number nomenclature

Relays

HH54P□- □□AC110V50Hz

Basic type

Contact arrangement
2: 2PDT
3: 3PDT
4: 4PDT
4-2: 2PDT
(with extra pick-up coil)

Mounting method
P: Plug-in
B: Printed circuit board
S: Flange

Contact form
Blank: Single
W: Bifurcated
U: High capacity

Coil voltage

Versions
Blank: Standard
F: With surge suppression device (DC)
CR: With surge suppression divice (AC)
R: Magnetically held
L: With indicator (LED)
FL: With surge suppression device and indicator (DC)
CRL: With surge suppression device and indicator (AC)

Contact material
Blank: Ag
J: Au-plated Ag

Sockets

TP514□

Basic type

No. of blades
8: 8-blade (For 2PDT contacts)
11: 11-blade (For 3PDT contacts)
14: 14-blade (For 4PDT contacts)

Mounting and wiring
Blank: For soldering
B: For printed circuit board
R2: For wire wrap
X2: For rail mounting (M3.5)
X1: For rail mounting (M3)

■ Ordering information

Specify the following:
1. Ordering code or type number
2. Coil voltage
3. Socket type number

Fuji Electric FA Components & Systems Co., Ltd.
Information subject to change without notice

■ Specifications

Basic type		HH52 HH53	HH54	HH52U	HH54U	HH52W	HH54W
Contact form		Single				Bifurcated	
Rated thermal current (A)		5	3	7	5	5	3
Rated insulation voltage		250V					
Pick-up voltage (at 20°C)	AC DC	80% of rated voltage 75% of rated voltage					
Drop-out voltage (at 20°C)	AC DC	30% of rated voltage 10% of rated voltage					
Max. power supply voltage		110% of rated voltage					
Operating temperature		-55 to +70°C, no icing (-25 to +60°C for with operating indicator)					
Dielectric strength		2000V AC rms, 1 minute between coil and contact 2000V AC rms, 1 minute between poles 1000V AC rms, 1 minute between open contacts 2000V AC rms, 1 minute between socket terminals					
Insulation resistance		100MΩ (500V DC megger)					
Operating time		20ms or less					
Vibration		Mechanical and malfunction durability: 10 to 55HZ, 1mm double amplitude					
Shock		Malfunction durability: 200m/s² Mechanical durability: 1000m/s²					
Durability	Mechanical	AC ratings: 50 million operations DC ratings: 100 million operations					
Contact resistance (before use)		50mΩ max.					
Mass		Approx. 33g					

Notes: HH52PW, 54PW, HH54PU: Au-plated Ag contact as standard
HH52P, 53P, 54P: Ag contact as standard

■ Coil characteristics

• AC coil

Order voltage code	Rated Voltage (V)	Rated current (mA)		Coil resistance (Ω)	Coil color	Power consumption (VA)	
		50Hz	60Hz			50Hz	60HZ
DC6	6	200	167	10	Clear	1.2	1.0
DC12	12	100	83	46	Clear		
DC24	24	50	42	187	Clear		
DC48	48	25	21	746	Clear		
AC100	100/110	12/12.7	10/10.9	3680	Green	1.2/1.4	1.0/1.2
AC110	110/120	10.9/11.7	9.1/10	4320	Clear		
AC200	200/220	6/6.4	5/5.5	13400	Yellow		
AC220	220/240	5.5/5.8	4.5/5	17200	Clear		

Note: Other voltages up to 240V AC are also available, contact FUJI.

• DC coil

Order voltage code	Voltage (V)	Rated current (mA)	Coil resistance (Ω)	Coil color	Power consumption (W)
DC6	6	150	40	Clear	0.9
DC12	12	75	160	Black	
DC24	24	37	650	White	
DC48	48	18.5	2600	Red	
DC100	100/110	9.1/10	11000	Blue	

Note: Other voltages up to 130V DC are also available on request, contact FUJI.

Industrial Control Relays
Miniature control relays HH52, 53, 54

■ Operating current and electrical durability

Voltage	Make Current (A)	Power factor or time constant	Break Current (A)	Power factor or time constant	Electrical life (× 10^3 operations) HH52U	HH52, HH53	HH54 HH54U	HH52W	HH54W
200V AC Ind. load	10 5 3	Cos ϕ = 0.7	1 0.5 0.3	Cos ϕ = 0.3 to 0.4	1000 2000 3500	400 1000 1700	80 200 330	150 400 660	– – 80
100V AC Ind. load	10 5 3	Cos ϕ = 0.7	1 0.5 0.3	Cos ϕ = 0.3 to 0.4	1500 3300 6000	700 1500 2800	130 280 500	260 560 1000	– 70 120
200V AC Res. load	3 1	Cos ϕ = 1	3 1	Cos ϕ = 1	1200 4000	600 2000	150 500	300 1000	– 130
100V AC Res. load	3 1	Cos ϕ = 1	3 1	Cos ϕ = 1	1700 6000	1000 3400	250 900	500 1800	60 120
24V DC Ind. load	1 0.2	T=15msec.	1 0.2	T=15msec.	1000 8400	500 4000	150 1200	300 2400	– 400
24V DC Res. load	3 1	T=0msec.	3 1	T=0msec.	1000 4500	400 1600	100 400	200 800	– 100

■ Ratings (UL and CSA)

Basic type	Voltage	Single-phase* motor (HP)	Resistive load (A)	Inductive load (A)	Remarks (polarity)
HH52P, 52B 52S **HH53P, 53B 53S**	120V AC 240V AC 30V DC 120V DC	1/6 1/4 – –	5 5 5 0.3	1.5 – 2(15ms) 0.2(15ms)	Same polarity between adjacent contacts for inductive load Opposite polarity for others
HH54P, 54B, 54S	120V AC 240V AC 30V DC 120V DC	1/10 1/4 – –	3 3 3 0.3	1 – 2(15ms) 0.2(15ms)	Same polarity between adjacent contacts for inductive load Opposite polarity for others
HH52PU, 52BU, 52SU	120V AC 240V AC 30V DC 120V DC	1/4 3/4 – –	7 7 7 0.3	1.5 – 2(15ms) 0.2(15ms)	Same polarity between adjacent contacts for inductive load Opposite polarity for others
HH54PU, 54BU, 54SU	120V AC 240V AC 30V DC 120V DC	1/8 1/4 – –	5 5 5 0.3	1 – 2(15ms) 0.2(15ms)	Same polarity between adjacent contacts for inductive load Opposite polarity for others
HH52PW, 52BW, 52SW	120V AC 240V AC 30V DC 120V DC	1/6 1/4 – –	5 5 5 0.3	1.5 – 2(15ms) 0.2(15ms)	Same polarity between adjacent contacts for inductive load Opposite polarity for others
HH54PW, 54BW, 54SW	120V AC 240V AC 30V DC 120V DC	– – – –	3 3 3 0.2	1 – 2(15ms) 0.2(15ms)	Same polarity between adjacent contacts for inductive load Opposite polarity for others

Note: *UL and CSA approvals only.

■ Dimensions, mm/Relays

Plug-in

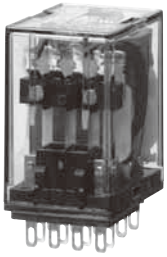

KKD05-132

HH52P

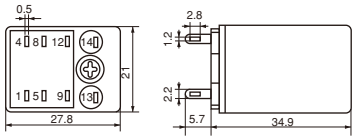

HH53P

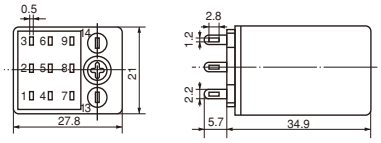

HH54P

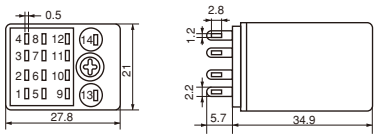

P.C. board

KKD05-134

HH52B, 53B*, 54B*

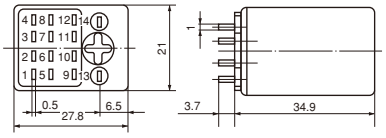

PC board drilling

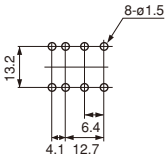

HH52B

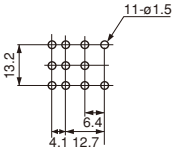

HH53B

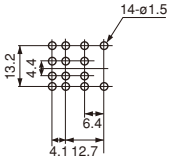

HH54B

* Number of terminals are different from HH52B.

Flange

KKD05-140

HH52S, 53S*, 54S*

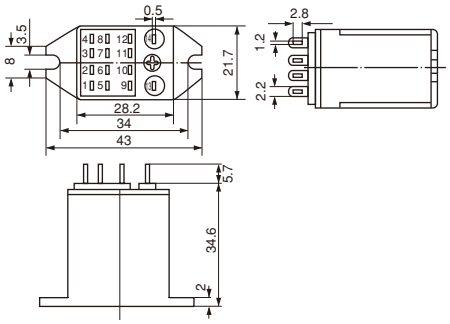

Panel drilling

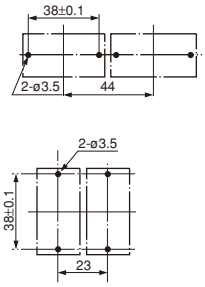

* Number of terminals are different from HH52S.

■ Wiring diagrams

HH52, HH54-2

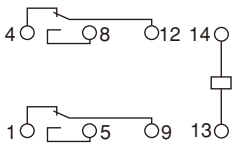

HH53

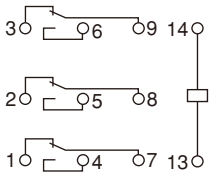

HH54

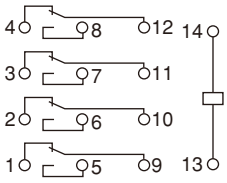

Industrial Control Relays
Miniature control relays HH52, 53, 54

■ Dimensions, mm/Sockets

Soldering

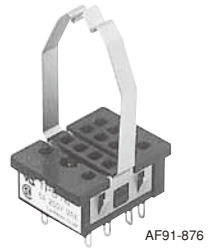

TP511

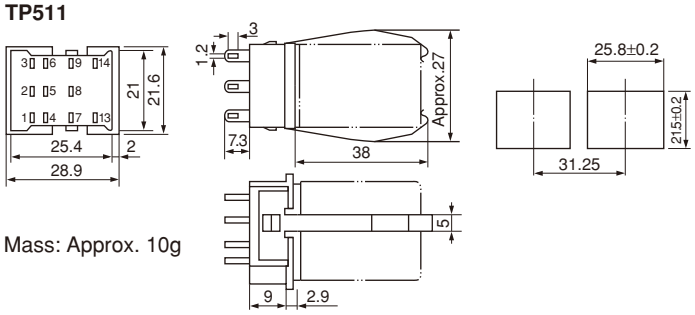

Mass: Approx. 10g

TP58

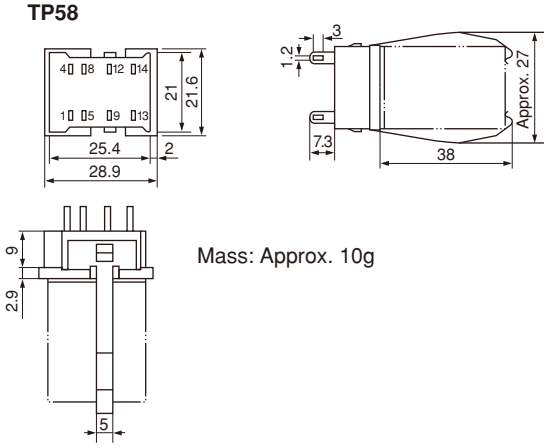

Mass: Approx. 10g

TP514

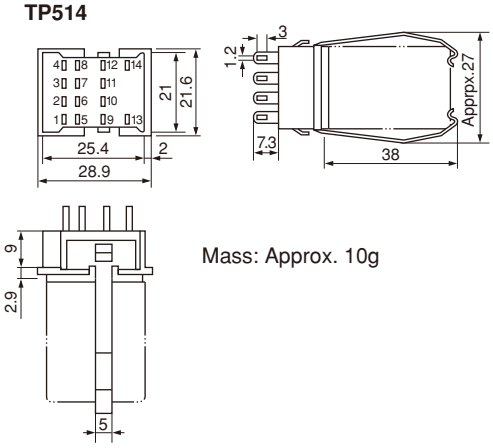

Mass: Approx. 10g

P.C. board

TP58B, TP511B, TP514B

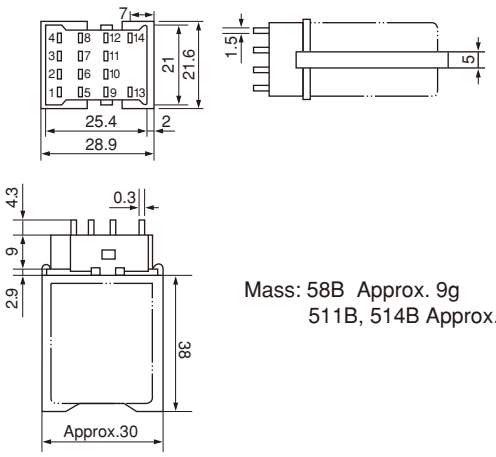

Mass: 58B Approx. 9g
511B, 514B Approx. 9.5g

PC board drilling

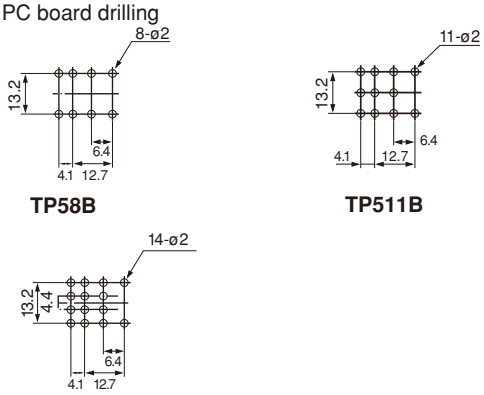

TP58B

TP511B

TP514B

Wire-wrap

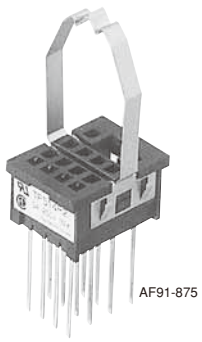

TP58R2

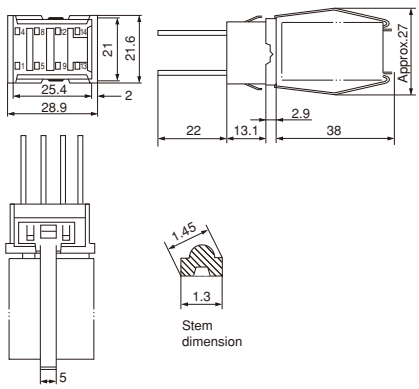

Mass: Approx. 10.5g

TP511R2

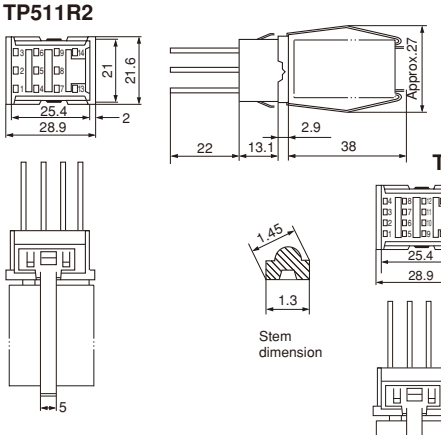

Mass: Approx. 11.5g

Panel cutting

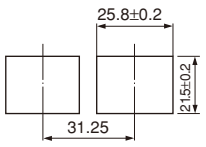

TP514R2

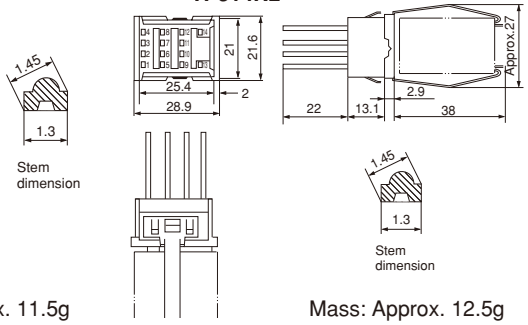

Mass: Approx. 12.5g

Mounting plates

FUJI can supply very convenient mounting plates which can accept either 1, 16, 18, 19, or 36 panel mounting miniature relays.
These mounting plates use plug-in relays with sockets, which are held in position by "snap-in" clips.

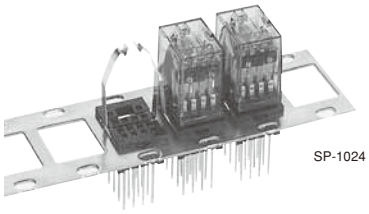
SP-1024

TX01

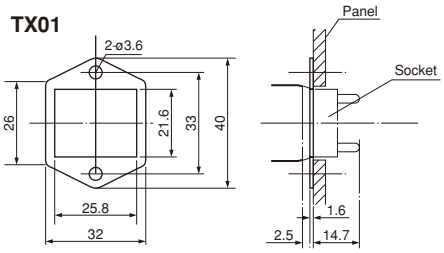

Mass: Approx. 5.8g

Panel cutting

Description	Type TX16	TX19
Hole	16	19
L distance	500	594
ℓ distance	468.7	562.5

TX18C

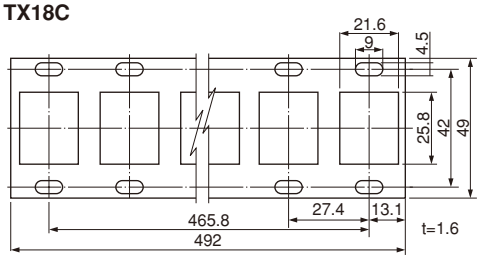

TX16, TX19

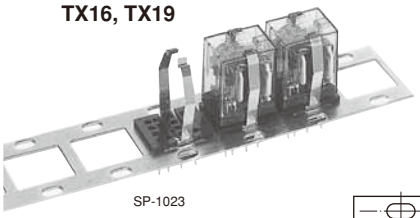
SP-1023

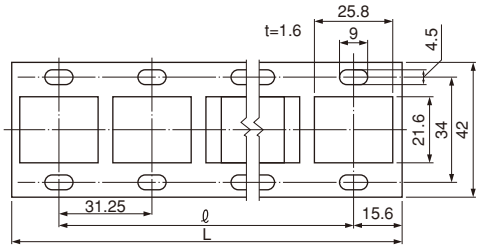

Mass: TX16 Approx. 130g
TX19 Approx. 160g

TX36C1

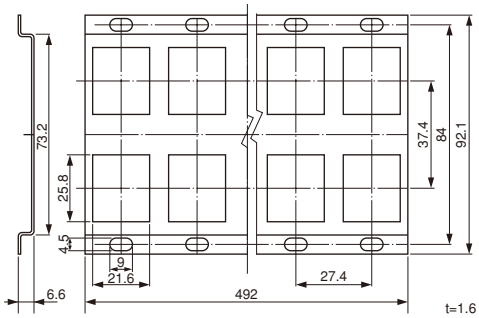

Mass: Approx. 325g

■ Finger protection covers

- Quick-mounting type cover
  The cover can be quickly mounted on or removed from the TP series socket used with HH series control relay, even if sockets are mounted side-by-side.
- Mountable any time
  The cover can be mounted on or removed from the socket at any time before or after wiring the terminals.

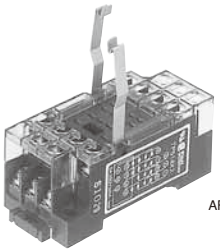
AF91-868

FX14X2

■ Types

Type	Used with
RZ52X1	TP58X1 Socket for HH52P miniature control relay
RZ54X1	TP514X1 Socket for HH54P miniature control relay
FX14X2	TP58X2 socket for HH52P miniature control relay TP514X2 socket for HH54P miniature control relay

■ Dimensions, mm

RZ52X1

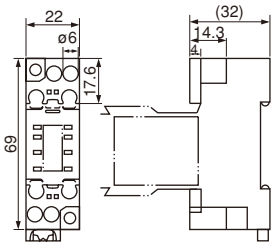

Mass: Approx. 2g

RZ54X1

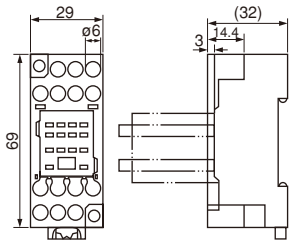

Mass: Approx. 2.5g

FX14X2

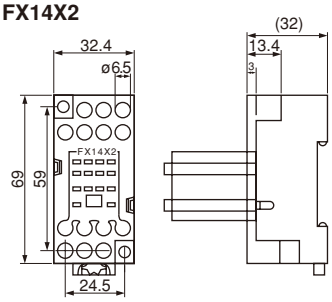

Mass: Approx. 2.7g

Industrial Control Relays
Miniature control relays HH52, 53, 54

■ Dimensions, mm

Sockets for rail mounting

● Screw terminal M3.5

TP58X2 (for HH52P)

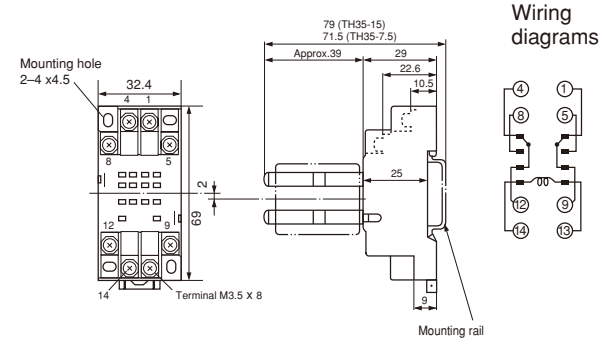

Mass: 49g

TP511X2 (for HH53P)

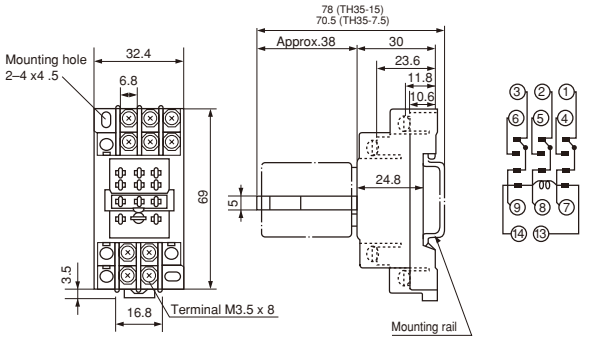

Mass: 50g

TP514X2 (for HH54P)

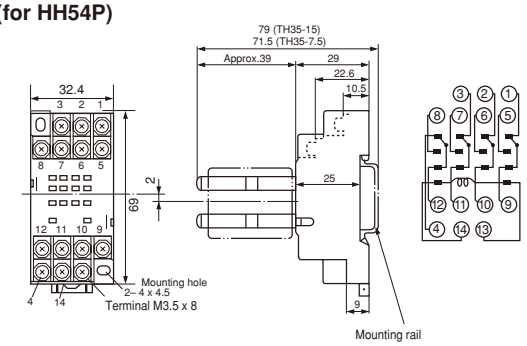

Mass: 62g

● Screw terminal M3

TP58X1 (for HH52P)

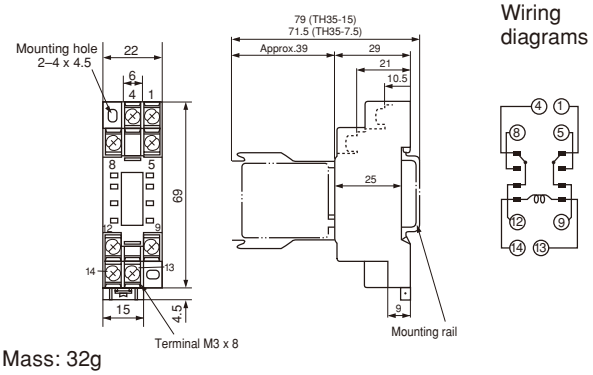

Mass: 32g

TP514X1 (for HH54P)

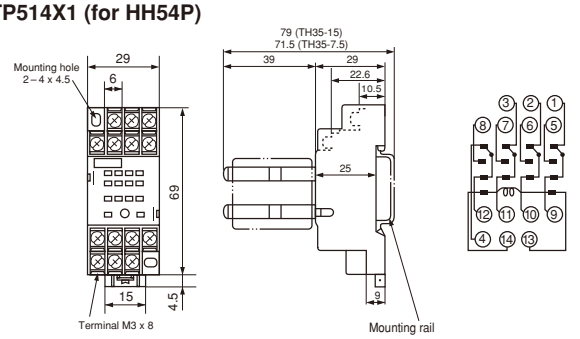

Mass: 49g

● Mounting rails

TH35-7.5AL

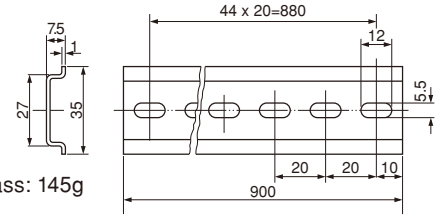

Mass: 145g

TH35-15AL

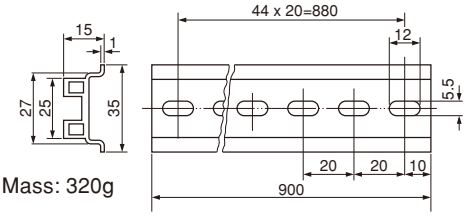

Mass: 320g

Compact, lightweight, and economical power relay with a high contact rating HH62, 63, 64

■ Features

- High contact rating
  Although compact and lightweight, this power relay has a contact rating of 10A. This relay is ideal for many kinds of electrical control equipment.
- High dielectric strength
  Though very compact, this relay has a dielectric strength of 2,000V AC for 1 minute.
- Easy socket mounting
  The input and output terminal arrangement makes the relay easy to mount on a control panel and easy to maintain and checks.
- Easy-to-identify coil voltages
  Different coil voltages are shown by different insulating tape colors. The coil voltages can be seen at a glance.

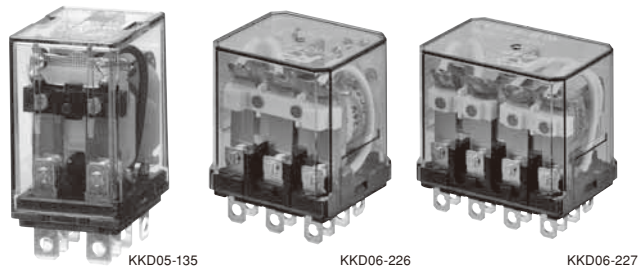

KKD05-135 **HH62P** KKD06-226 **HH63P** KKD06-227 **HH64P**

● **UL recognized, CSA and TÜV approved**

UL file No.
HH62: E42419
HH63: E142976
HH64: E142975

TÜV license No.
HH62: R9251342
TP68: T9150891

CSA file No.
HH62: LR20479
HH63, 64: LR35144

C2

Relays

Classification		Contact form and arrangement		Mounting Plug-in Type	Ordering code	PC board Type	Ordering code	Frange Type	Ordering code
Standard	Without LED	Single	2PDT	**HH62P**	RP2CP-■	**HH62B**	RP2CB-■	**HH62S**	RP2CS-■
			3PDT	**HH63P**	RP3CP-■				
			4PDT	**HH64P**	RP4CP-■				
		Bifurcated	2PDT	**HH62PW**	RP2CPW-■	**HH62BW**	RP2CBW-■	**HH62SW**	RP2CSW-■
	With LED	Single	2PDT	**HH62P-L**	RP2CPL-■	**HH62B-L**	RP2CBL-■		
			3PDT	**HH63P-L**	RP3CPL-■				
			4PDT	**HH64P-L**	RP4CPL-■				
		Bifurcated	2PDT	**HH62PW-L**	RP2CPWL-■	**HH62BW-L**	RP2CBWL-■		
With surge suppress-ion device	Without LED	Single	2PDT	**HH62P-F**	RP2CPF-■	**HH62B-F**	RP2CBF-■	**HH62S-F**	RP2CSF-■
		Single	2PDT	**HH62P-CR**	RP2CPC-■	**HH62B-CR**	RP2CBC-■		
		Bifurcated	2PDT	**HH62PW-F**	RP2CPWF-■	**HH62BW-F**	RP2CBWF-■		
		Bifurcated	2PDT	**HH62PW-CR**	RP2CPWC-■	**HH62BW-CR**	RP2CBWC-■	**HH62SW-F**	RP2CSWF-■
	With LED	Single	2PDT	**HH62P-FL**	RP2CPG-■	**HH62B-FL**	RP2CBG-■		
		Single	2PDT	**HH62P-CRL**	RP2CPA-■	**HH62B-CRL**	RP2CBA-■		
		Bifurcated	2PDT	**HH62PW-FL**	RP2CPWG-■	**HH62B-FL**	RP2CBWG-■		
		Bifurcated	2PDT	**HH62PW-CRL**	RP2CPWA-■	**HH62B-CRL**	RP2CBWA-■		

Notes: • Enter the coil voltage code in the ■ mark. • UL, CSA and TÜV approved.

■ Specifications

Rated insulation voltage		250V
Pick-up voltage (at 20°C)	AC DC	80% of rated voltage HH62: 75% of rated voltage HH63, 64: 80% of rated voltage
Drop-out voltage (at 20°C)	AC DC	30% of rated voltage 10% of rated voltage
Max. power supply voltage		110% of rated voltage
Operating temperature		HH62: -55 to +70°C, no icing (-25 to +50°C for with operating indicator) HH63, 64 : -25 to +40°C, no icing (up to +55°C at 4A or less)
Dielectric strength		2000V AC rms., 1 minute between coil and contact 2000V AC rms., 1 minute between poles 1000V AC rms., 1 minute between open contacts 2000V AC rms., 1 minute between socket terminals
Insulation resistance		100MΩ (500V DC megger)
Operating time		HH62: 20ms or less HH63, 64: 25ms or less
Vibration		Mechanical and malfunction durability: 10 to 55Hz, 1mm double amplitude
Shock		Malfunction durability HH62: 200m/s^2, HH63, 64: 100m/s^2 Mechanical durability 1000m/s^2
Durability	Mechanical Electrical	50 million operations (with bifurcated contact: 20 million operations) See "Electrical durability curve"
Contact resistance Contact material		50mΩ max. before use Silver-alloy

Industrial Control Relays
Miniature power relays HH62, 63, 64

■ Coil characteristics

● AC coil

Type	Rated voltage (V AC)	Coil voltage code	Exciting current (mA) 50Hz	Exciting current (mA) 60Hz	Coil color	Power consumption (VA) 50Hz	Power consumption (VA) 60Hz
HH62	6	AA	200	167	Clear	1.2	1
	12	AB	100	83			
	24	AE	50	42			
	48	AF	25	21			
	100/110	A1	12/12.7	10/10.9	Green	1.2/1.4	1/1.2
	110/120	AH	10.9/11.7	9.1/10	Clear		
	200/220	A2	6/6.4	5/5.5	Yellow		
	220/240	AM	5.5/5.8	4.5/5	Clea		
HH63	100	A1	20	147	Yellow	2	1.7
	200	A2	9.8	8.5	Yellow		
HH64	100	A1	24	20	Yellow	2.5	2
	200	A2	11.8	10	Yellow		

● DC coil

Type	Coil voltage code	Rated voltage (V DC)	Exciting current (mA)	Coil resistance (Ω)	Coil color	Power consumption (W)
HH62	DA	6	150	40	Clear	0.9
	DB	12	75	160	Black	
	DE	24	37	650	White	
	DF	48	18.5	2600	Red	
	D1	100/110	9.1/10	11000	Blue	
HH63	DE	24	60	400	Green	1.5
HH64	DE	24	62	388	Green	1.5

Note: Other voltages up to 240V AC/130V DC are available on request, contact FUJI.

C2

■ Electrical durability

● HH62

AC Voltage

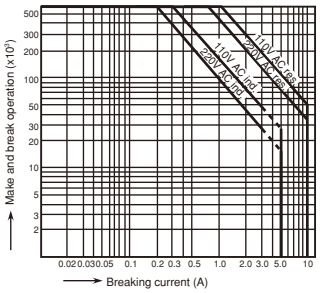

DC Voltage

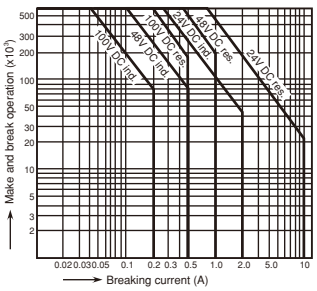

● HH63, 64

AC Voltage

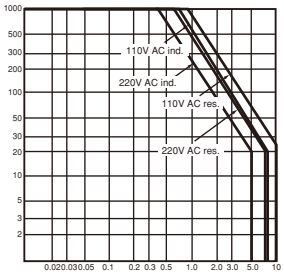

DC Voltage

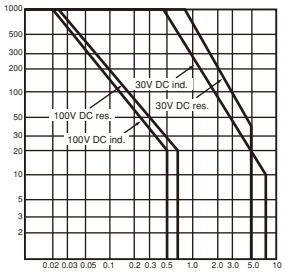

Sockets

Description	Type	Ordering code	Mass (g)	Used with
Soldering	**TP68**	RX68	10	HH62
PC board	**TP68B**	RX68B1	9.5	
Wire wrap	**TP68R**	RX68R2	11	
Rail mounting, screw terminal	**TP68X2**	RX68X2	46	HH62
	TP611X2	RX61X2	60	HH63
	TP614X2	RX64X2	76	HH64
Finger protection cover	**RZ62X2**	RZ62X2	2.4	HH68X2
	RZ64X2	RZ64X2	3.5	HH614X2

Mounting rails, 900mm long

Description	Type	Ordering code	Mass (g)	Socket
7.5mm high, Steel	**TH35-7.5**	RR7F	290	TP68X2, TP611X2 or TP614X2
7.5mm high, Aluminium	**TH35-7.5**	RR7A	145	
15mm high, Aluminium	**TH35-15AL**	RR15A	320	

■ Ordering information

Specify the following:
1. Ordering code or type number
2. Accessory (socket, mounting rail)

■ Type number nomenclature

Relays

HH6 2 P □ - □□ AC110V 50Hz

Coil rated voltage
AC: 6 to 240V AC
DC: 6 to 130V DC

Versions
Blank: Standard
F: With surge suppression device (DC)
L: With indicator (LED)
FL: With surge suppression device and indicator (DC)
CR: With surge suppression device (AC)
CRL: With surge suppressioin device and indicator (AC)

Contact material
Blank: Ag-alloy
J: Au-plated Ag-alloy

Contact form
Blank: Single
W: Bifurcated

Mounting
P: Plug-in
B: Printed circuit board
S: Flange

Contact arrangeament
2: 2PDT 3: 3PDT
4: 4PDT

Basic type

■ Contact ratings (UL, CSA and TÜV)

Basic type	Voltage	Single-phase	Continuous current (A)	Resistive load (A)	Inductive load (A)	Remarks (polarity)
HH62P (HH62PW)	120V AC 240V AC 30V DC 120V DC	1/3 (1/6) 1 (1/4) – –	10 (7) 10 (7) 10 (7) 10 (7)	10 (5) 10 (5) 8 (5) 0.3 (0.3)	1.5 – 2(15ms) 0.2(15ms)	Opposite polarity
HH63P* HH64P*	120V AC 240V AC 30V DC 120V DC	1/6 1/3 – –	10 10 10 10	10 10 8 0.3	1.5 – 2(15ms) 0.2(15ms)	Opposite polarity

Note: *UL and CSA approvals only ( ): HH62PW

■ Dimensions, mm

Relays

HH62P

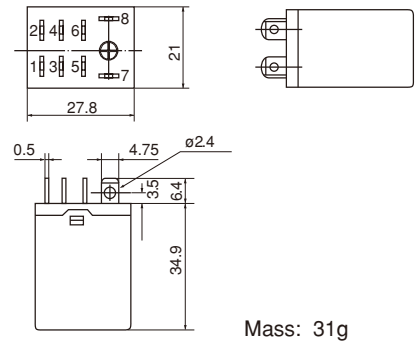

Mass: 31g

HH63P

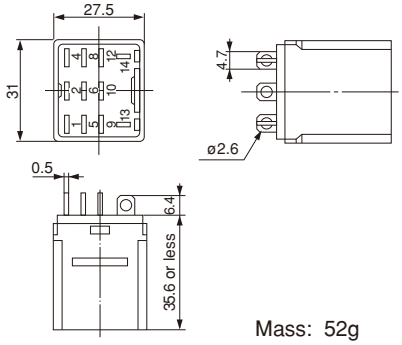

Mass: 52g

HH64P

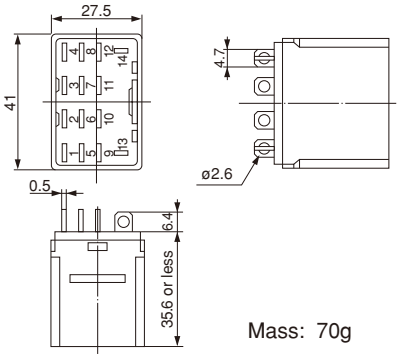

Mass: 70g

HH62B

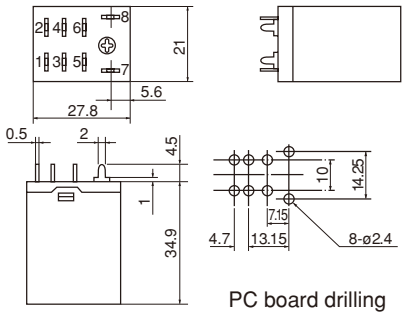

PC board drilling

Mass: 30g

HH62S

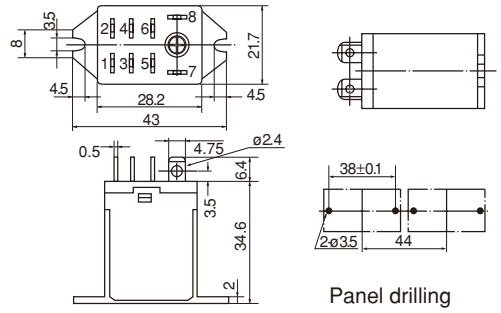

Panel drilling

Mass: 33g

Sockets

TP68 (Soldering)

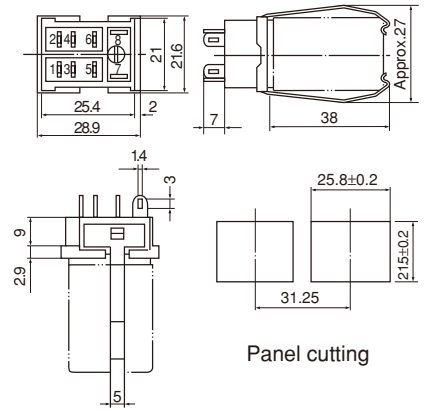

Panel cutting

Mass: 10g

TP68B (PC board)

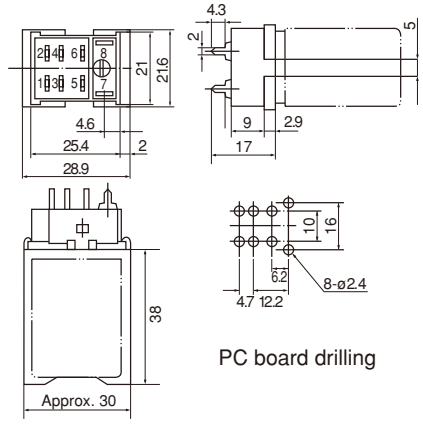

PC board drilling

Mass: 9.5g

TP68R (Wire wrap)

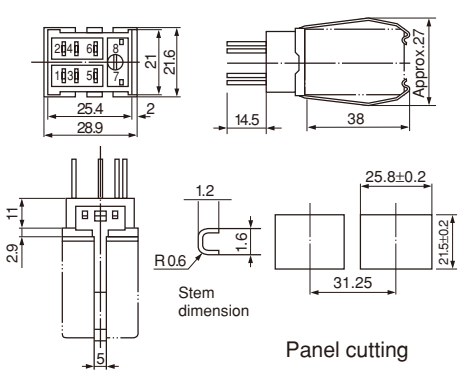

Panel cutting

Mass: 11g

Industrial Control Relays
Miniature power relays HH62, 63, 64

■ Dimensions, mm

Sockets

TP68X2

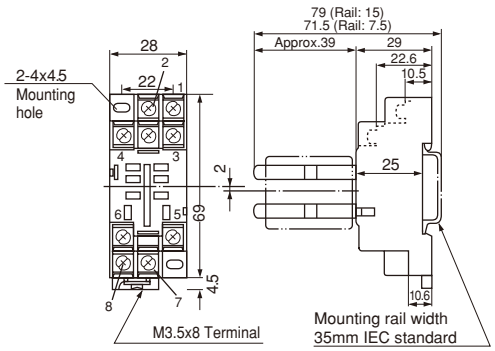

Mass: 46g

TP611X2

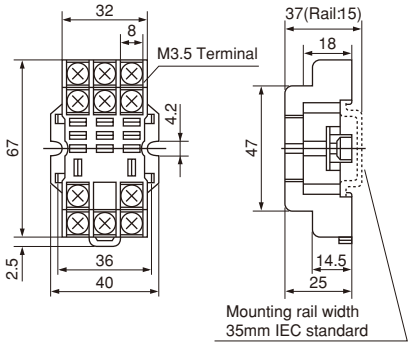

Mass: 60g

TP614X2

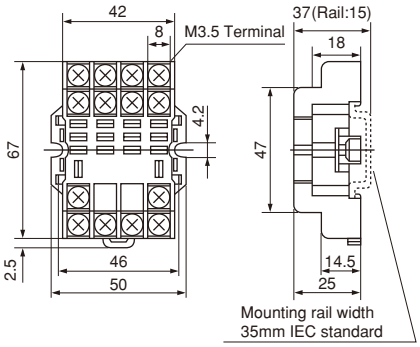

Mass: 76g

Panel drilling

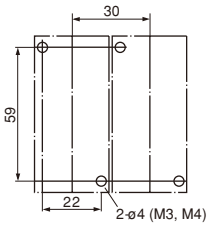

Wiring diagram

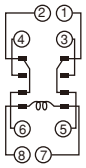

Panel drilling

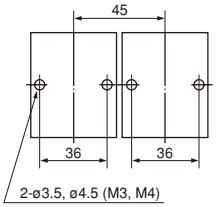

Wiring diagram

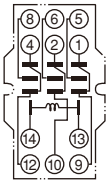

Panel drilling

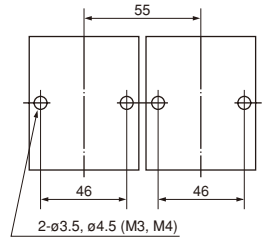

Wiring diagram

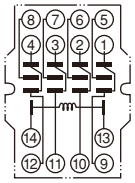

Finger protection covers

RZ62X2

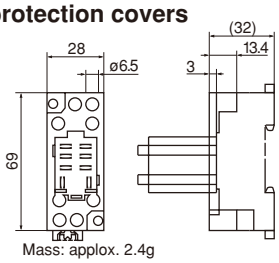

Mass: applox. 2.4g

RZ64X2

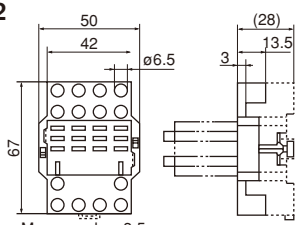

Mass: applox. 3.5g

Type	Used with
RZ62X2	TP68X2 Socket for HH62P power relay
RZ64X2	TP614X2 Socket for HH62P power relay

■ Wiring diagrams

• **HH62 (standard)**

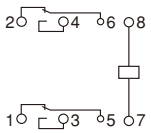

• **HH62-L (with indicator)**
Coil : 6V, 12V AC, 6V DC

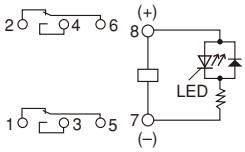

Coil : 24V to 240V AC, 12 to 120V DC

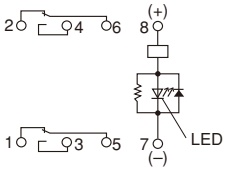

• **HH62□-F (with surge suppressor)**

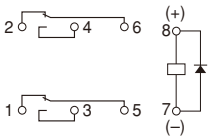

• **HH63P (standard)**

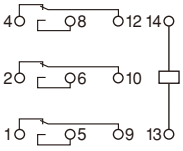

• **HH63P-L (with indicator)**
Coil : 24V DC

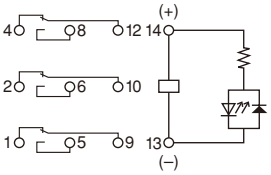

Coil : 100, 200V AC

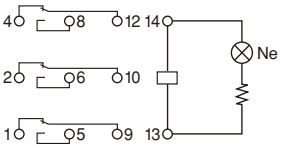

• **HH64P (standard)**

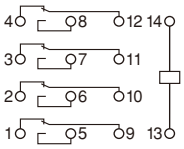

• **HH64P-L (with indicator)**
Coil : 24V DC

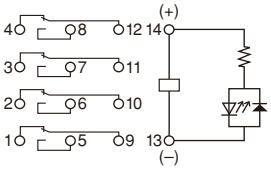

Coil: 100, 200V AC

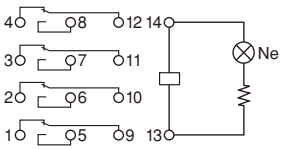

General purpose relays HH22, 23, 24

■ Description

These high quality general purpose relays are suitable for multi-pole switching and, although economically priced, are dependable and sturdily constructed. They are available with coil voltages 24–130V DC and 24–240V AC with continuous current ratings of either 4 or 6 Amps. Standard contact buttons are silver. Contact arrangements are 2PDT, 3PDT and SPDT+2NO+1NC. Relays are enclosed in a polycarbonate dust cover with octal type 8 or 11 pin plugs.

SF 2011 HH22PN (2PDT)
SF 2012 HH23PN (3PDT) with socket
SF 2013 HH24PN (SPDT+2NO+1NC)

■ Versions

Operating status indicator

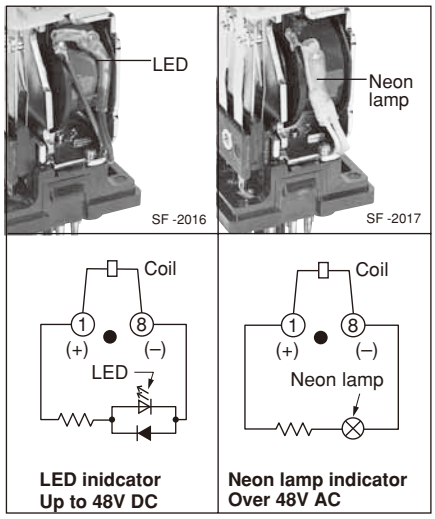

LED inidcator Up to 48V DC | **Neon lamp indicator Over 48V AC**

These relays can be supplied with a visual operating indicator which greatly simplifies troubleshooting in all types of electrical control equipment.

Dual coil magnetically held

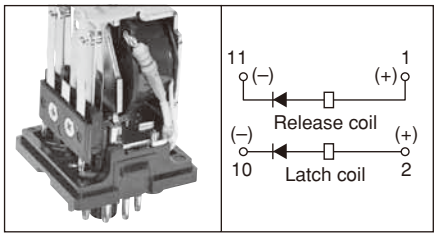

A momentary pulse to one of two coils results in the contacts being firmly held in one of two positions without further flow of current.
This gives this class of relays a good memory stability since it will retain a permanent latch position despite a loss of power.
Coil ratings are 24–220V AC and 24–110V DC.

Surge suppression

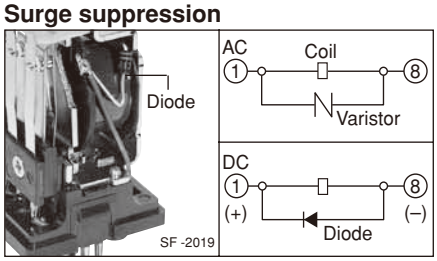

We can supply the relays with surge suppression device.
These relays can be applied for AC and DC operation.

Arc-barrier

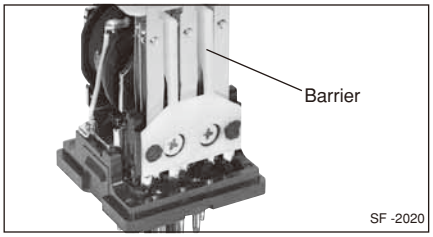

The HH23PN-B is provided with arc-barriers which gives it protection from excessive loads. It can safely be used on polarized circuits and even small motor loads.

■ Type number nomenclature

H H 2 3 P N - □ J B L AC110V 50Hz

Basic type

Contact arrangement
2 : 2PDT
3 : 3PDT
4 : SPDT+2NO+1NC

Mounting method
P: Plug-in

Contact form
N : Single
W : Bifurcated

Wiring
Blank : Wiring A (Standard)
T : Wiring B
K : Wiring C
(*See page C2-44.*)

Coil voltage
AC: 24 to 240V AC
DC: 24 to 130V DC

Indicators
Blank : Without indicator
L : With indicator (neon-lamp or LED)

Versions
B : With arc-barrier
F : With surge suppression device
BF : With arc barrier and surge suppression device
R : Magnetically held type
RB : Magnetically held type with arc barrier

Contact
Blank : Ag (standard)
J : Au-plated Ag

Note: HH24PN type and relays with bifurcated contacts cannot be provided with arc barrier.

■ Ordering information

Specify the following:
1. Ordering code or type number

Industrial Control Relays
General purpose relays HH22, 23, 24

■ Versions (Plug-in mounting)

Relays

Classification		Contact form and arrangement		Wiring diagram A Type	Ordering code	Wiring diagram B Type	Ordering code	Wiring diagram C Type	Ordering code
Standard	Without LED	Single	2PDT	**HH22PN**	RC2CP-■	**HH22PN-T**	RC2CPT-■	**HH22PN**	
			3PDT	**HH23PN**	RC3CP-■	**HH23PN-T**	RC3CPT-■	**HH23PN**	RC3CPK-■
			2NO+1NC+SPDT	**HH24PN**	RC4MP-■	–		–	
		Bifurcated	2PDT	**HH22PW**	RC2CPW-■	**HH22PW-T**	RC2CPWT-■	**HH22PW**	
			3PDT	**HH23PW**	RC3CPW-■	**HH23PW-T**	RC3CPWT-■	**HH23PW**	RC3CPWK-■
			2NO+1NC+SPDT	**HH24PW**	RC4MPW-■	–		–	
	With LED	Single	2PDT	**HH22PN-L**	RC2CPL-■	**HH22PN-TL**	RC2CPTL-■	**HH22PN**	
			3PDT	**HH23PN-L**	RC3CPL-■	**HH23PN-TL**	RC3CPTL-■	**HH23PN**	RC3CPK-■
			2NO+1NC+SPDT	**HH24PN-L**	RC4MPL-■	–		–	
		Bifurcated	2PDT	**HH22PW-L**	RC2CPWL-■	**HH22PW-TL**	RC2CPWTL-■	**HH22PW**	
			3PDT	**HH23PW-L**	RC3CPWL-■	**HH23PW-TL**	RC3CPWTL-■	**HH23PW**	RC3CPWK-■
			2NO+1NC+SPDT	**HH24PW-L**	RC4MPWL-■	–		–	
With surge suppression device	Without LED	Single	2PDT	**HH22PN-F**	RC2CPF-■	**HH22PN-TF**	RC2CPTF-■	**HH22PN**	
			3PDT	**HH23PN-F**	RC3CPF-■	**HH23PN-TF**	RC3CPTF-■	**HH23PN**	RC3CPK-■
			2NO+1NC+SPDT	**HH24PN-F**	RC4MPF-■	–		–	
		Bifurcated	2PDT	**HH22PW-F**	RC2CPWF-■	**HH22PW-TF**	RC2CPWTF-■	**HH22PW**	
			3PDT	**HH23PW-F**	RC3CPWF-■	**HH23PW-TF**	RC3CPWTF-■	**HH23PW**	RC3CPWK-■
			2NO+1NC+SPDT	**HH24PW-F**	RC4MPWF-■	–		–	
	With LED	Single	2PDT	**HH22PN-FL**	RC2CPG-■	**HH22PN-TFL**	RC2CPTG-■	**HH22PN**	
			3PDT	**HH23PN-FL**	RC3CPG-■	**HH23PN-TFL**	RC3CPTG-■	**HH23PN**	RC3CPK-■
			2NO+1NC+SPDT	**HH24PN-FL**	RC4MPG-■	–		–	
		Bifurcated	2PDT	**HH22PW-FL**	RC2CPWG-■	**HH22PW-TFL**	RC2CPWTG-■	**HH22PW**	
			3PDT	**HH23PW-FL**	RC3CPWG-■	**HH23PW-TFL**	RC3CPWTG-■	**HH23PW**	RC3CPWK-■
			2NO+1NC+SPDT	**HH24PW-FL**	RC4MPWG-■	–		–	
With arc barrier	Without LED	Single	2PDT	**(HH22PN**	RC2CP-■)	**(HH22PN-T**	RC2CPT-■)	**(HH22PN**	
			3PDT	**HH23PN-B**	RC3CPB-■	**HH23PN-TB**	RC3CPBT-■	**HH23PN**	RC3CPBK-■
		Bifurcated	2PDT	**(HH22PW**	RC2CPW-■)	**(HH22PW-T**	RC2CPWT-■)	**(HH22PW**	
	With LED	Single	2PDT	**(HH22PN-L**	RC2CPL-■)	**(HH22PN-TL**	RC2CPTL-■)	**(HH22PN**	
			3PDT	**HH23PN-BL**	RC3CPBL-■	**HH23PN-TBL**	RC3CPBTL-■	**HH23PN**	RC3CPBKL-■
		Bifurcated	2PDT	**(HH22PW-L**	RC2CPWL-■)	**(HH22PW-TL**	RC2CPWTL-■)	**(HH22PW**	
With arc barrier and surge suppression device	Without LED	Single	2PDT	**(HH22PN-F**	RC2CPF-■)	**(HH22PN-TF**	RC2CPTF-■)	**(HH22PN**	
			3PDT	**HH23PN-BF**	RC3CPBF-■	**HH23PN-TBF**	RC3CPBTF-■	**HH23PN**	RC3CPBKF-■
		Bifurcated	2PDT	**(HH22PW-F**	RC2CPWF-■)	**(HH22PW-TF**	RC2CPWTF-■)	**(HH22PW**	
	With LED	Single	2PDT	**(HH22PN-FL**	RC2CPG-■)	**(HH22PN-TFL**	RC2CPTG-■)	**(HH22PN**	
			3PDT	**HH23PN-BFL**	RC3CPBG-■	**HH23PN-TBFL**	RC3CPBTG-■	**HH23PN**	RC3CPBKG-■
		Bifurcated	2PDT	**(HH22PW-FL**	RC2CPWG-■)	**(HH22PW-TFL**	RC2CPWTG-■)	**(HH22PW**	
Magnetically held	Without LED	Single	2PDT	**HH22PN-R**	RC2CPR-■	–		–	
			1NO+1NC+SPDT	**HH23PN-R**	RC3MPR-■	–		–	
		Bifurcated	2PDT	**HH22PW-R**	RC2CPWR-■	–		–	
			1NO+1NC+SPDT	**HH23PW-R**	RC3MPWR-■	–		–	
Magnetically held arc barrier	Without LED	Single	2PDT	**(HH22PN-R**	RC2CPR-■)	–		–	
			1NO+1NC+SPDT	**HH23PN-RB**	RC3MPRB-■	–		–	
		Bifurcated	2PDT	**(HH22PW-R**	RC2CPWR-■)	–		–	

Notes: • Enter the coil voltage code in the ■ mark.
• Although the type in parenthesis denotes a relay having no arc barriers, it has good insulation performance equal to the relay with arc barriers, as it has enough insulation distance between contacts.

Sockets

Description		Type	Ordering code	Used with
Soldering	8-pin	**8GB**	RX8G	HH22P
	11-pin	**11GB**	RX1G	HH23P, 24P
Surface mounting screw terminal	8-pin	**TP38S**	RX38S0	HH22P
	11-pin	**TP311S**	RX38S0	HH23P, 24P
Rail mounting screw terminal	8-pin	**TP38X**	RX38X0	HH22P
	11-pin	**TP311X**	RX31X0	HH23P, 24P
Hold-down Spring		**FX1B**	RZ1B	Front connection
		FX1C	RZ1C	Rear connection

■ Operating current and electrical durability

Voltage	Current (A) Make	Current (A) Break	Electrical durability ($\times 10^3$ operations) HH22PN, 23PN, 24PN HH22PW, 23PW	Electrical durability ($\times 10^3$ operations) HH24PW
200V AC Ind. load	15 *1	3 *2	200	100
	10	1	600	300
	3	0.3	2400	1200
200V AC Res. load	3	3	800	400
	1	1	3000	1500
24V DC Ind. load	1 *3	1 *3	600	300
	0.3	0.3	3000	1500
100V DC Res. load	0.5	0.5	1000	500
	0.1	0.1	5000	4000
24V DC Res. load	3	3	600	300
	0.5	0.5	5000	3000

Note: Power factor: *1 $\cos\phi$=0.7 *2 $\cos\phi$=0.3 to 0.4
Time constant: *3 T=15ms

■ Specifications

Basic type		HH22P	HH23P	HH24P
Rated thermal current (A)		6	6	4
Rated insulation voltage		250V		
Pick-up voltage (at 20°C)	AC DC	80% of rated voltage 75% of rated voltage		
Drop-out voltage (at 20°C)	AC DC	30% of rated voltage 10% of rated voltage		
Max. power supply voltage	AC DC	110% of rated voltage 130% of rated voltage		
Operating temperature		-20 to +40°C, avoid icing		
Dielectric strength		2000V AC rms.,1minute between coil and contact 2000V AC rms.,1minute between poles 1500V AC rms.,1minute between open contacts 2000V AC rms.,1minute between socket terminals		
Insulation resistance		100MΩ (500V DC megger)		
Operating time		20ms or less		
Vibration		Mechanical and malfunction durability: 10 to 55HZ, 0.75mm double amplitude		
Shock		Malfunction durability: 60m/s^2 Mechanical durability: 500m/s^2		
Durability	Mechanical Electrical	50 million operations *See page C2-42*		
Contact resistance Contact material		50mΩ max. before use Silver-alloy		

■ Coil characteristics

• AC coil

Rated voltage (V)	Coil Voltage code	Rated current (mA)		Coil resistance (Ω)	Coil color	Power consumption(VA)	
		50HZ	60HZ			50HZ	60HZ
24	**AF**	137	125	53	Clear	3.3	3
48	**AF**	69	63	230	Clear		
100	**A1**	33	30	900	Green		
200	**A2**	16	15	3960	Yellow		
220	**AM**	15	13	4520	Clear		

Note: Other voltages between 24V and 130V DC are available.

• DC coil

Rated voltage (V)	Coil Voltage code	Rated current (mA)	Coil resistance (Ω)	Coil color	Power consumption (W)
24	**DE**	67	360	White	1.6
48	**DF**	33	1460	Red	
100	**D1**	16	6260	Blue	
110	**DH**	16	7570	Clear	

Note: Other voltages between 24V and 130V DC are available.

■ UL and CSA approved

UL file No. E42419
CSA file No. LR20479

● Relays

Contact		Wiring	Type	Ordering code
2PDT	Single	A	**HH22PN-UL**	RC2CP-■ZU
		C	**HH22PN-K-UL**	RC2CPK-■ZU
	Bifurcated	A	**HH22PW-UL**	RC2CPW-■ZU
		C	**HH22PW-K-UL**	RC2CPWK-■ZU
3PDT	Single	A	**HH23PN-UL**	RC3CP-■ZU
	Single	B	**HH23PN-T-UL**	RC3CPT-■ZU
	Single	C	**HH23PN-K-UL**	RC3CPK-■ZU
	Bifurcated	A	**HH23PW-UL**	RC3CPW-■ZU
	Bifurcated	B	**HH23PW-T-UL**	RC3CPWT-■ZU
	Bifurcated	C	**HH23PW-K-UL**	RC3CPWK-■ZU

Note: Enter the coil voltage code in the ■ mark.

● Ratings

Type	Contact ratings			
	Voltage	Single-phase motor (HP)	Resistive load (A)	Inductive load (A)
HH22P-UL	120V AC	1/4	6	2
HH22P-T-UL	240V AC	1/2	6	–
HH23P-UL	30V DC	–	6	3 (15ms)
HH23P-T-UL	120V DC	–	0.5	0.3 (15ms)
HH23P-K-UL				

Note: ( ) : Time constant

● Socket

Type	Ordering code	Used with
8GB-UL	RX8G-ZU	HH22P

Type	Ordering code	Used with
11GB-UL	RX1G-ZU	HH23P

Industrial Control Relays
General purpose relays HH22, 23, 24

■ Lloyd approved

Type	Ordering code	Voltage	Contact Arrangement	Form	Continuous current (A)	Approved No.
HH22PN	RX2CP-■ZL	6 to 220V AC 50/60HZ 6 to 110V DC	2PDT	Single	6	YKA052811
HH23PN	RX3CP-■ZL		3PDT			
HH24PN	RX4MP-■ZL		2NO+1NC+SPDT		4	
HH22PN-T	RX2CPT-■ZL		2PDT		6	
HH23PN-T	RX3CPT-■ZL		3PDT			
HH22PW	RX2CPW-■ZL		2PDT	Bifurcated	6	
HH23PW	RX3CPW-■ZL		3PDT			
HH24PW	RX4MPW-■ZL		2NO+1NC+SPDT		4	
HH22PW-T	RX2CPWT-■ZL		2PDT		6	
HH23PW-T	RX3CPWT-■ZL		3PDT			

Note: Enter the coil voltage code in the ■ mark.

■ Internal wirings

C2

● Standard

Wiring A

HH22PN
HH22PW

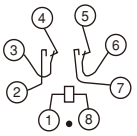

HH23PN
HH23PW

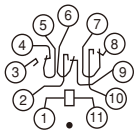

HH24PN
HH24PW

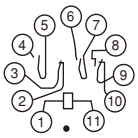

Wiring B

HH22PN-T
HH22PW-T

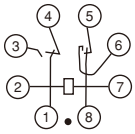

HH23PN-T
HH23PW-T

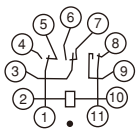

Wiring C

HH23PN-K
HH23PW-K

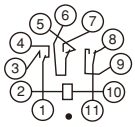

● With operation indicator

HH22PN-L
HH22PW-L

100, 200V

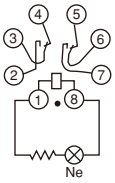

24, 48V*

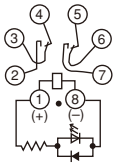

HH22PN-TL
HH22PW-TL

100, 200V

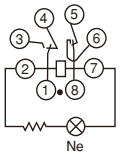

24, 48V*

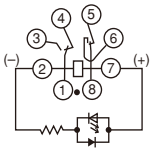

HH23PN-L
HH23PW-L

100, 200V

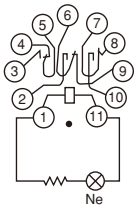

24, 48V*

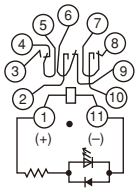

HH23PN-TL
HH23PW-TL

100, 200V

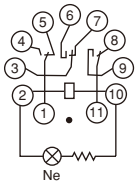

24, 48V*

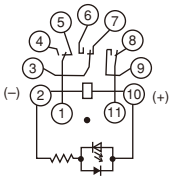

*Be careful that DC coil terminals have polarity

● With surge suppression device (DC coil)

HH22PN-F
HH22PW-F

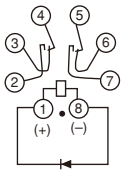

HH22PN-TF
HH22PW-TF

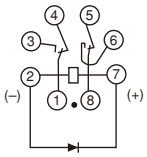

HH23PN-F
HH23PW-F

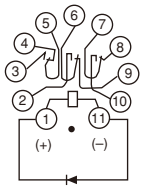

HH23PN-TF
HH23PW-TF

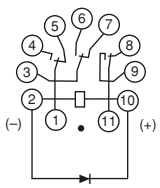

● With surge suppression device (AC coil)

HH22PN-F
HH22PW-F

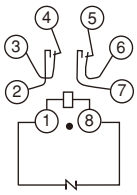

HH22PN-TF
HH22PW-TF

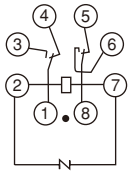

HH23PN-F
HH23PW-F

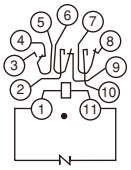

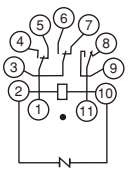

Fuji Electric FA Components & Systems Co., Ltd.
Information subject to change without notice

■ Dimensions, mm

• **Relays**

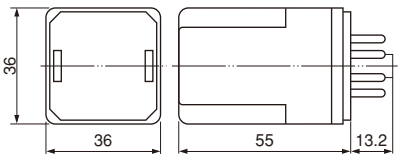

Mass: Approx. 100g

• **Hold-down spring**

FX1B

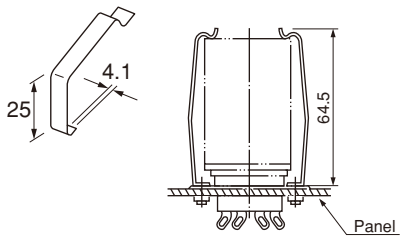

FX1C

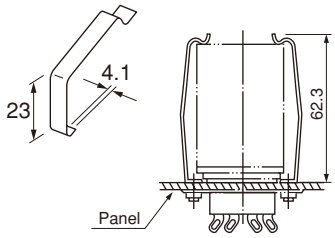

■ Dimensions, mm

• **Sockets**

Soldering/8GB, 11GB

8GB

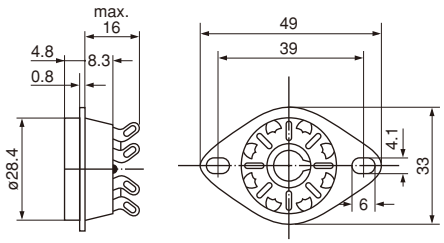

11GB

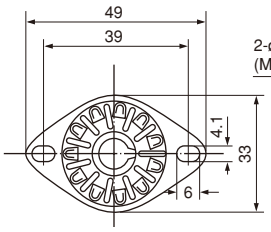

Panel cutting

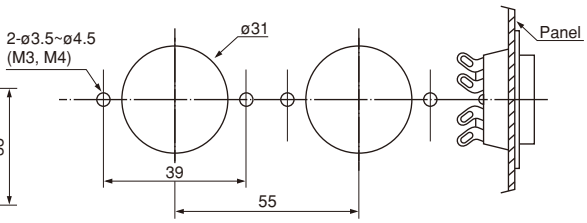

Screw terminal/TP38S, TP311S

TP38S

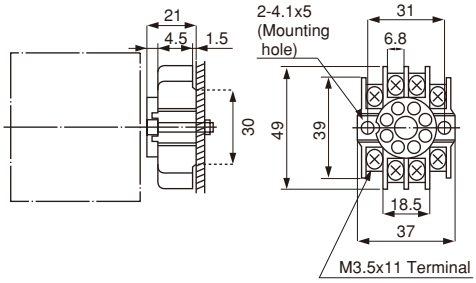

TP311S

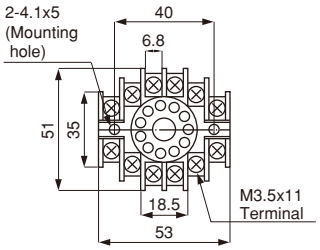

Panel drilling

TP38S

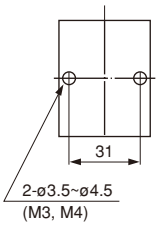

TP311S

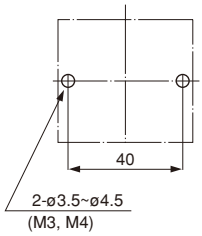

Screw terminal/Rail mounting

TP38X

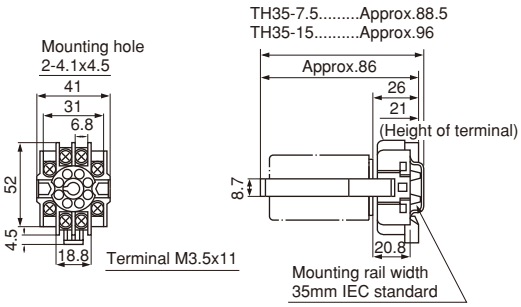

TP311X

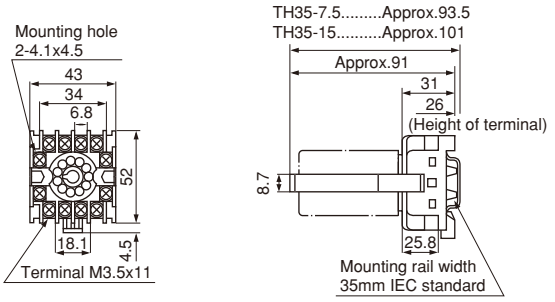

Mass (Approx.)

8-pin		11-pin	
8GB	12.5g	11GB	13g
TP38S	33g	TP311S	46g
TP38X	45g	TP311X	59g

Annunciator Relay Units RV and JH13PN

Plug-in type annunciator relay units RV and JH13PN

KKD06-060
RV4

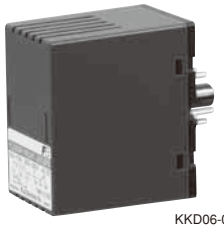
KKD06-055
JH13PN

W-1414
Socket(8GB)

SF-2023
Hold-down spring (FX1B)

■ Description

RV series are plug-in octal base-type relays designed for modular use. They combine the necessary functions for annunciator systems and simplify the connection to bells, buzzers, alarm lights, flicker relays and lamp test pushbuttons, etc. in alarm systems. Alarm systems require many types of annunciators i.e. alarm lights which flash on and off, or which light in the case of trouble, and trouble pilot lamps with a MEMORY. Thus the relay unit varies according to its usage and the type of annunciator used. FUJI can supply a wide range of relay units to meet the needs of clients. A flicker relay JH13PN is now available. Schematic diagrams of alarm circuits can be supplied.

■ Features

- A relay unit is available to match your alarm system and to permit a simplified circuit.
- We can supply 10 different kinds of relay units which meet every situation.
- The compact design allows density mounting and so even if a number of units are installed together the space they occupy is small.
- Low power consumption
- The contact has a rated thermal current of 3 Amps.
- Highly dependable and trouble-free
  Relay units use the highly dependable FUJI miniature relay HH54B.
- Either lock or non-lock systems are available.
- Relay has a dielectric strength of 2000V AC for 1 minute.
- Alarm input contacts can be either normally open or normally closed.
- With surge suppression device
  Surges are suppressed by a surge suppressor. Therefore high sensitive relays or semiconductors can be connected to an annunciator circuit without malfunctions or damage.
- Available for uses input and output circuits in opposite polarity.

■ Specifications

● Annunciator relays

Type		RV1□	RV2□	RV3□	RV4□	RV5□	RV1-Z□	RV2-Z□	RV3-Z□	RV4-Z□	RV5-Z□
Ordering code *		RV1A-□	RV2A-□	RV3A-□	RV4A-□	RV5A-□	RV1Z-□	RV2Z-□	RV3Z-□	RV4Z-□	RV5Z-□
Operating coil rated voltage	Input	24 to 240V AC, 50/60Hz 4 to 110V DC					24 to 110V DC				
	Output	24 to 240V AC, 50/60Hz 4 to 110V DC					24 to 240V AC, 50/60Hz				
Power consumption		AC: Approx. 3.8VA, DC: Approx. 2.4W					AC: Approx. 3.8VA, DC: Approx. 2.4W				
Operating voltage range		85% to 110% of rated voltage					85% to 110% of rated voltage				
Contact rated thermal current Auxiliary contact arrangement		3A –	3A SPDT	3A 1NO	3A 1NC	3A 1NC	3A –	3A SPDT	3A 1NO	3A 1NC	3A 1NC
Mechanical durability		50 million operations									
Operating time at rated voltage		Max. 20msec. (AC coils of RV3 and RV4: Max. 25ms.)									
Release time		AC: Max. 20msec. DC: Max. 50msec.									
Ambient temperature		-10°C to +40°C (no icing)									
Insulation resistance		100MΩ at 500V DC megger									
Dielectric strength		2000V AC rms 1 minute between input and outpu 1000V AC rms 1 minute between each live part									

Note * Enter the operating coil voltage code in the □ mark as follow:
24V AC:AE, 48V AC:AF, 100V AC:A1, 110V AC:AH, 200V AC:A2, 220V AC:AM, 240V AC:AP
24V DC:DE, 48V DC:DF, 100V DC:D1, 110V DC:DH

● Flicker relay

Type (Ordering code)		JH13PN-□ (RF1-□)
Coil	Rated operating voltage	100–110/200–220V AC, DC (selectable) 24, 48V AC/DC
	Operating voltage range	85 to 120% of rated voltage
Output contact arrangement Flickering period		SPDT 600msec.
Contact rated thermal current		6A
Insulation voltage		250V
Mechanical durability		10 million operations
Ambient temperature		-10°C to +40°C (no icing)
Insulation resistance		100MΩ at 500V DC megger
Dielectric strength		2000V AC rms 1 minute between control circuit and contact 1000V AC rms 1 minute between open contacts

Note: Enter the operating coil voltage code in the □ mark as follow:
24V AC/DC:CE, 48V AC/DC:CF, 100/110V AC/DC, 200/220V AC/DC:CH

■ Timing and wiring diagrams/Flicker indication system

Timing diagrams
Instantaneous fault — Continuous fault — Wiring diagrams

RV1, RV1-Z

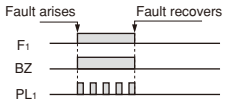

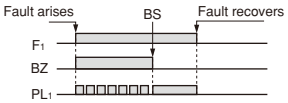

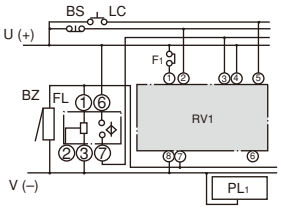

RV2, RV2-Z

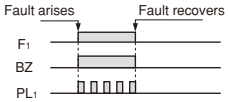

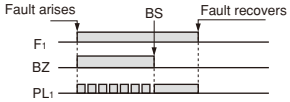

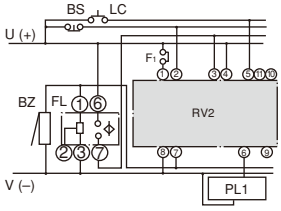

RV3, RV4, RV3-Z, RV4-Z

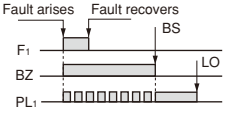

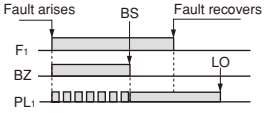

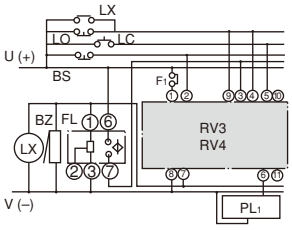

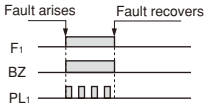

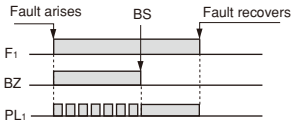

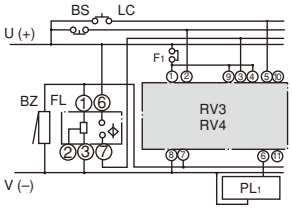

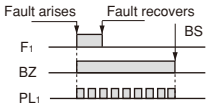

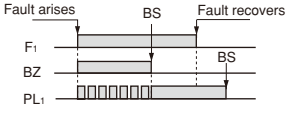

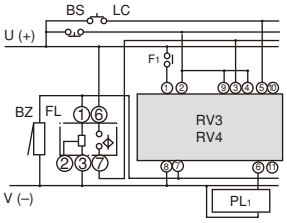

RV5, RV5-Z

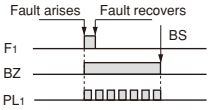

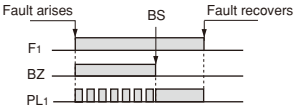

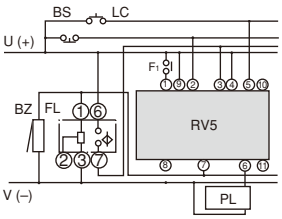

F1: Fault signal input contact
BZ: Buzzer (or bell)
PL: Indicating lamp
FL: Flicker relay
BS: Buzzer stop switch
LO: Lamp off switch
LC: Lamp checking switch
LX: Lock relay

■ Dimensions, mm

● Annunciator relay/RV

RV1, RV1-Z: 8pin
Other types: 11-pin

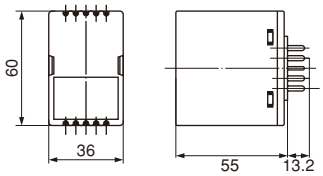

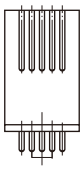

Mass: 110g

Hold-down spring FX1B

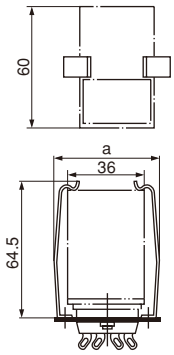

Socket type		a
Soldering terminal	8GB (8-pin) 11GB (11-pin)	47mm
Screw terminal	TP38S (8-pin) TP311S (11-pin)	41mm 47mm

● Flicker relay/JH13PN

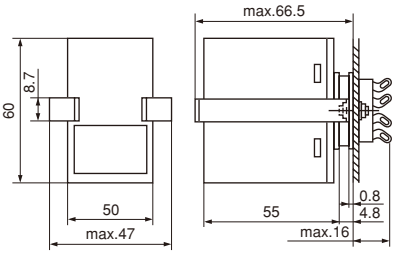

Mass: 94g

■ Ordering information

Specify the following:
1. Type number
2. Type number of sockets and hold-down spring
3. Type number of flicker relay for flickering indication system

C2

Annunciator Relay Units
RV series and JH13PN

■ Wiring diagrams

Type	AC rating (Input/output: AC)	DC rating (Input/output: DC)	Z type (Input: DC, output: AC)
RV1	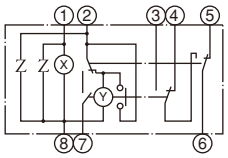	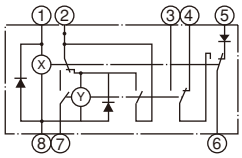	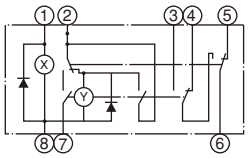
RV2	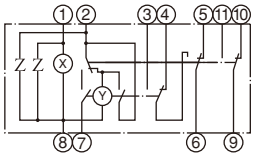	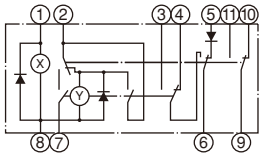	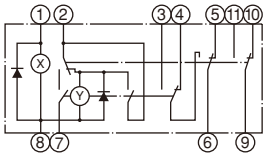
RV3	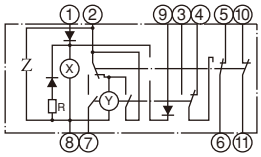	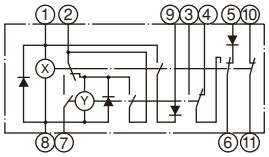	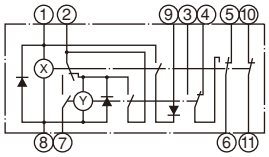
RV4	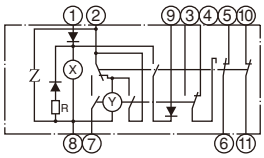	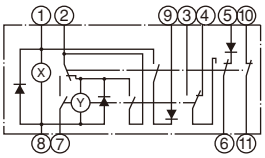	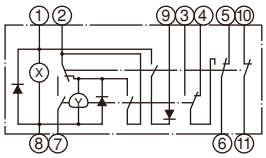
RV5	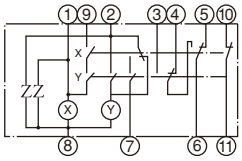	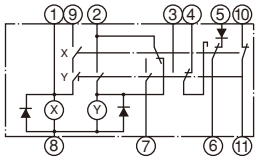	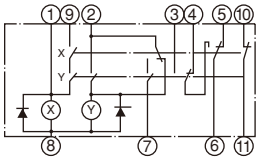

■ Sockets

Annunciator relay Type	Flicker relay Type	Applicable socke	Type	Mass(Approx)
RV1, RV1-Z	JH13PN	Rear connection soldering terminal (for 8-pin)	**8GB**	12.5g
		Front connection screw terminal (for 8-pin)	**TP38S**	33g
		Rail mounting screw terminal (for 8-pin)	**TP38X**	45g
RV2, RV2-Z RV3, RV3-Z RV4, RV4-Z RV5, RV5-Z		Rear connection soldering terminal (for 11-pin)	**11GB**	12g
		Front connection screw terminal (for 11-pin)	**TP311S**	46g
		Rail mounting screw terminal (for 11-pin)	**TP311X**	59g
Hold-down spring/Front connection			**FX1B**	3g
Hold-down spring/Rear connection			**FX1C**	3g

■ Dimensions of sockets: *See page C2-45.*

Time delay relays

FUJI time delay relays feature top performance and dependability.
These compact industrial time delay relays are specifically designed for process control, machine tools, safety device control, and other applications in which space is at a premium and reliability essential.
FUJI manufactures a wide variety of highly versatile time delay relays, which include Super Timers and digital timers that meet diverse needs in industry.

KKD05-126

■ Super Timers

● MS4S/Multimode and compact body
The MS4S is a timer with four operation modes. The on-delay, flicker, one-shot or signal off-delay operation modes can be selected.
See page C2-52 for further information.

KKD13-029

● ST7P/Miniature size
The ST7P is a highly efficient miniaturized on-delay timer.
The maximum timing interval is 12 hours.
See page C2-60 for further information.

Time Delay Relays
Ordering code system

■ Ordering code system

● Super Timer MS4S series

M S 4 S M-AP 1T
① ② ③ ④ ⑤⑥ ⑦⑧

① Product category

Code	Description
M	Timer, counter

② Series category

Code	Description
S	Super timer

③ Timer size

Code	Description
4S	DIN 48mm square

④ Version

Code	Operation
M	Multimode operation
A	On-delay operation
C	On-delay operation with instantaneous contact
F	Off-delay operation
Y	For star-delta starting
R	Repeat operation

⑤⑥ Input voltage

Code ⑤	Code ⑥	Input voltage
A	P	100–240V AC
C	E	24V AC/DC
D	L	48–127V DC

⑦⑧ Timing range

Code ⑦	Code ⑧	Timing range
1	T	0.6 – 12s (MS4SF)
1	N	0.6 – 12min (MS4SF)

C2

● Super Timer ST7P series

M S 7 P 2-AP 1T
① ②③④ ⑤⑥⑦ ⑧⑨

① Product category

Code	Description
M	Timer, counter

② Series category

Code	Description
S	Super timer

③ Timer size

Code	Description
7	Miniature type

④ Mounting

Code	Description
P	Plug-in
B	Printed circuit board

⑤ Output contact

Code	Contact arrangement
2	Timed, 2PDT
4	Timed, 4PDT
Blank	Timed, SPDT (ST7PF only)

⑥⑦ Input voltage

Code ⑥	Code ⑦	Input volyage
A	2	200-230V AC
A	1	100-120V AC
A	P	240V AC
A	E	24V AC
D	1	100-110V DC
D	F	48V DC
D	E	24V DC
D	B	12V DC

⑧⑨ Timing range

Code ⑧	Code ⑨	Timing range
P	5	0.06 – 0.5s(MS7P□,7B□)
1	S	0.1 – 1s(MS7P□,7B□)
3	S	0.3 – 3s(MS7P□,7B□)
5	S	0.4 – 5s(MS7P□,7B□)
1	T	1 – 10s(MS7P□,7B□)
3	T	2 – 30s(MS7P□,7B□)
6	T	4 – 60s(MS7P□,7B□)
3	M	0.25 – 3min(MS7P□,7B□)
1	N	1 – 10min(MS7P□,7B□)
3	N	2 – 30min(MS7P□,7B□)
6	N	4 – 60min(MS7P□,7B□)
2	H	0.2 – 2h(MS7P□,7B□)
6	H	0.5 – 6h(MS7P□,7B□)
1	J	1 – 12h(MS7P□,7B□)
2	J	2 – 24h(MS7P□,7B□)

● Socket (For MS4S)

Mounting	Terminal	Type	Ordering code
Surface	Screw	TP411X	MX41X2
Surface	Screw	TP48X	MX48X2
Flush	Screw	TP411SBA	MX41N1A
Flush	Screw	TP48SB	MX48N1
Flush	Soldering	ATX1NS	MX48NS
Flush	Soldering	ATX2NS	MX41NS

● Socket (For ST7P)

Mounting	Terminal	Type	Ordering code
Surface	Soldering	TP88	MX58
Surface	Soldering	TP814	MX54
Surface	Wire wrap	TP88R2	MX58R2
Surface	Wire wrap	TP814R2	MX54R2
Surface	P. C. board	TP88B	MX58B
Surface	P. C. board	TP814B	MX54B
Surface	Screw	TP88X2	MX58X2
Surface	Screw	TP814X2	MX54X2
Surface	Screw	TP88X1	MX58X1
Surface	Screw	TP814X1	MX54X1

● Accessory

Description	Type	Ordering code
Hold-down spring	FX3	MZ24
Adaptor	TX4	MZ34

■ Types

Description	Operation	Contact arrangement		Timer body	Required socket		
		Timed	Instant.	Type	Surface mounting Type	Flush mounting Type	Rail mounting Type
Super Timer Multi-range, compact body	Multi-mode • On-delay • Flicker • One-shot • Signal off-delay	2PDT	–	**MS4SM**	TP411X 11GB + FX3 (Hold-down spring)	TP411SBA+TX4 (Adaptor) ATX2NS+TX4 (Adaptor)	TP411X
	On-delay	2PDT SPDT	– SPDT	**MS4SA** **MS4SC**	TP48X 8GB + FX3 (Hold-down spring)	TP48SB+TX4 (Adaptor) ATX1NS+TX4 (Adaptor)	TP48X
	Off-delay	2PDT SPDT	–	**MS4SF** **MS4SF-R**			
	Star-delta	2NO	1NO	**MS4SY**			
	On-off repetitive operation	2PDT	–	**MS4SR**			
Super Timer Miniature size	On-delay	2PDT	–	**ST7P-2**	TP88 TP88R2 TOP88B	–	TP88X2 TP88X1
	On-delay	4PDT	–	**ST7P-4**	TP814 TP814R2 TP814B	–	TP814X2 TP814X1

Time Delay Relays
Super Timers MS4S

Direct-reading time-scale and compact body MS4S Super Timer

MS4S series Super Timers feature an easy setting and direct-reading system of four time-scale.
MS4SM timer is multimode operation type and MS4SA and MS4SC timers are on-delay operation type.

■ Features

- Time-scale indication window and time-scale selector
  By turning a time-scale selector, the timing-scales appear in the indication windows one set a time. Although this is a multimode timer, the optional times such as 56 or 27 minutes can be easily set with the direct-reading time-scale.

- Compact timer with instantaneous contact
  On-delay timers with instantaneous contact, as well as multimode and on-delay timers, are compact.
  The front to back length of the timers is only 66.5mm.

- Operation mode indication window and operation mode selector
  Four operation modes are provided (MS4SM type only).
  By turning the operation mode selector, the on-delay, flicker, one-shot, or signal off-delay operation mode can be selected. The present mode is shown in the operation mode indication window with the marks PO, FL, OS or SF.

- LED power ON and output indicator
  The power-source lamp (Green) is lit when power is on and flickers during timer operation.
  The output lamp (Red) is lit when the timed NO contact is on.

- Wide range of AC supply voltage
  Supply voltages of 100 to 240V AC are commonly available (ordering code: AP type only).

- Instantaneous operation function with 0 indication
  When the timer dial is set at 0, output is given instantaneously, allowing sequence checks to be performed easily.

- Time unit indication window and time unit selector
  By turning the time selector, time units of 0.1 sec., sec., min, and hours. can be selected and made to appear in the indication window.

- Improvement of resistance to waveform distortion
  The resistance to distortion of secondary voltage waveform of the power supply caused by inverters and uninterruptible power supplies (UPS) is improved.

MS4SM KKD05-126

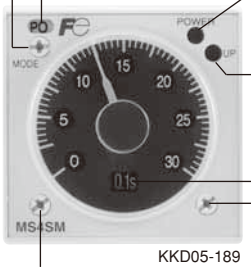

KKD05-189

- UL, c UL us and TÜV approved

■ Timing range/16 ranges

Time-scale	Time unit indication window			
	0.1s	sec	min	hrs
0 1 2 3 4 5 6	0.05 – 0.6s	0.05 – 6s	0.5 – 6min	0.5 – 6h
0 2 4 6 8 10 12	0.1 – 1.2s	1 – 12s	1 – 12min	1 – 12h
0 5 10 15 20 25 30	0.25 – 3s	2.5 – 30s	2.5 – 30min	2.5 – 30h
0 10 20 30 40 50 60	0.5 – 6s	5 – 60s	5 – 60min	5 – 60h

■ Type number nomenclature

MS 4 S M - AP 1T R N

Super Timer

DIN 48mm square size

Compact type

Operation mode
- M: Multimode
- A: On-delay Timed contact 2PDT
- C: On-delay Timed contact SPDT, Inst. contact SPDT
- F: Off-delay
- Y: Star-delta
- R: Repeat timer

Input voltage code
- AP: 100 - 240V AC
- CE: 24V AC/DC
- DL: 48 - 127V DC

Timing range code
- 1T: 0.6-12s (MS4SF, R)
- 1N: 0.6-12min (MS4SF, R)

Contact arrangement
- R: With reset

Operation type (MS4SR only)
- N: ON start
- Blank: OFF start

■ Ordering information

Specify the following
1. Ordering code or type number of body and socket.

Fuji Electric FA Components & Systems Co., Ltd.
Information subject to change without notice

■ Specifications (MS4SM, MS4SA, MS4SC)

Type	Ordering code	Input voltage	Operation	contact	Timing range	Socket *
MS4SM	MS4SM-AP MS4SM-CE MS4SM-DL	100 – 240V AC 24V AC/DC 48 – 127V DC	On-delay Flicker One-shot Signal off-delay	Timed: 2PDT 5A	Total 16 ranges 0.05 – 0.6s 0.1 – 1.2s 0.25 – 3s 0.05 – 6s 0.5 – 6 (s, min, h) 1 – 12 (s, min, h) 2.5 – 30 (s, min, h) 5 – 60 (s, min, h)	Surface mounting: TP411X 11GB(RX1G)+FX3(MZ24) Flush mounting: TP411SBA ATX2NS(MX41NS)
MS4SA	MS4SA-AP MS4SA-CE MS4SA-DL	100 – 240V AC 24V AC/DC 48 – 127V DC	On-delay	Timed: 2PDT 5A		Surface mounting: TP48X(MX48X2) 8GB(RX8G)+FX3(MZ24) Flush mounting: TP48SB(MX48N1) ATX1NS(MX48NS)
MS4SC	MS4SC-AP MS4SC-CE MS4SC-DL	100 – 240V AC 24V AC/DC 48 – 127V DC	On-delay	Timed: SPDT Instant: SPDT 5A		

* ( ): Ordering code

■ Technical data (MS4SM, MS4SA, MS4SC)

Repeat accuracy	±0.3% at max. setting time
Reset time	0.1s or less
Operating voltage range	0.85 to 1.1 times rated input voltage
Operating temperature range	-10 to +55°C (No icing)
Humidity	35 to 85% (No condensation)
Contact ratings	5A at 250V AC resistive load
Power consumption	Approx. 10VA at AC, pprox. 1W at DC,
Insulation resistance	100MΩ at 500 DC megger
Dielectric strength	2000V AC 1min. between current carrying part and non-current carrying part 2000V AC 1min. between output contact and control circuit 1000V AC 1min. between open contacts
Vibration	Malfunction durability: 10 to 55Hz, 0.5mm double amplitude Mechanical durability: 10 to 55Hz, 0.75mm double amplitude
Shock	Malfunction durability: 100m/s^2 Mechanical durability: 500m/s^2
Durability	Mechanical: 20 million operations Electrical: 00000 operations at 240V AC 5A resistive load
Mass	Approx. 100g

■ Standards

UL file No.: E44592
TÜV License No.: R50007315 (MS4SM)
R50006667 (MS4SA, MS4SC)

■ Timing and wiring diagrams

MS4SM

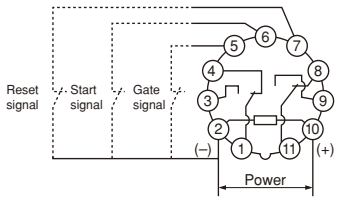

1. On-delay PO

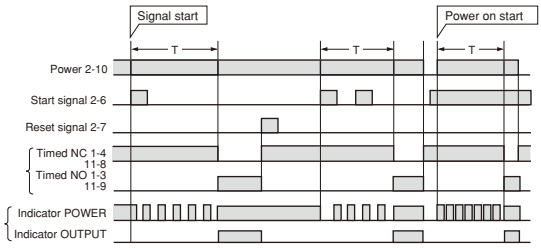

- Turn the mode selector until PO is displayed.
- When power is on, applying the start signal turns the timed NO (Normally open) contact on after the set time has elapsed.
- For the power-on start, the start signal pins (2 and 6) must be connected in advance.

2. Flicker FL

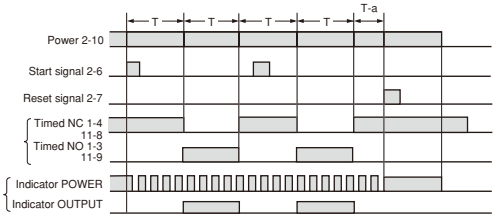

- Turn the mode selector until FL is displayed.
- When power is on, applying the start signal turns the timed contact on and off repeatedly at the set time intervals.

3. One-shot OS

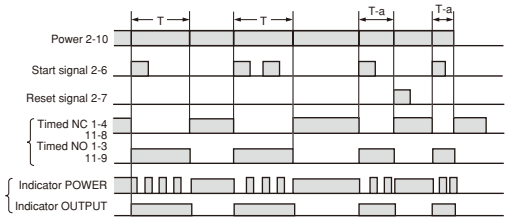

- Turn the mode selector until OS is displayed.
- When power is on, applying the start signal instantly turns the timed NO contact on and turns it off after the set time has elapsed.

4. Signal off-delay SF

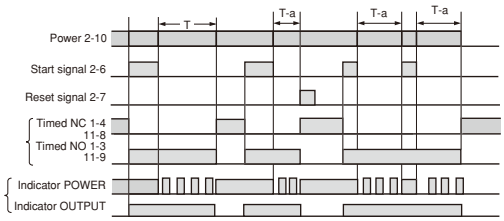

- Turn the mode selector until SF is displayed.
- When power is on, applying the start signal instantly turns the timed NO contact on. Removing the start signal turns the contact off after the set time has elapsed.

MS4SA

● **On-delay**

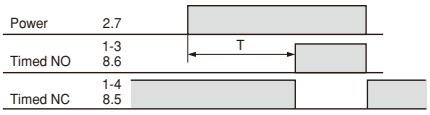

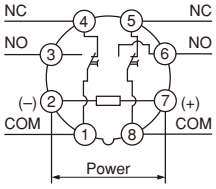

- When power is applied, the timed NO contacts make after the set time has elapsed.
- When power is removed, the contacts reset.

MS4SC

● **On-delay**

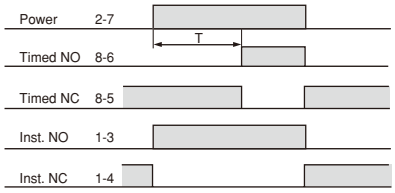

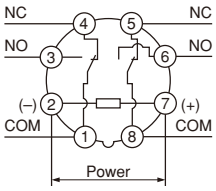

- Timed contact
  When power is applied, the NO contact makes after the set time has elapsed. When power is removed, the contacts reset.
- Instantaneous contact
  When power is applied, the NO contact makes instantly.
  When power is removed, the contacts reset.

Notes:
- T=Set time. T-a=Time period within the set time
- The gate signal is used to interrupt the elapsing of timing operation.

■ Specifications (MS4SF, MS4SF-R, MS4SY)

Type	Ordering Code	Input voltage	Operation	Contact	Timing range	
MS4SF	MS4SF-AP■ MS4SF-CE■ MS4SF-DL■	100-240V AC 24V AC/DC 48-127V DC	OFF-delay	Timed: 2PDT 5A	0.05-0.6 (s, min) 0.1-1.2 (s, min) 0.5-6 (s, min) 1-12 (s, min)	
				Timed: SPDT with inst. reset: SPDT		
	MS4SF-AP■R MS4SF-CE■R MS4SP-DL■R	100-240V AC 24V AC/DC 48-127V DC				
MS4SY	MS4SY-AP	100-240V AC	Star-delta	Timed 1 NO (star output) Timed 1 NO (delta output) + Instant 1NO	Star starting time 0.5-6s, 1-12s, 5-60s, 10-120s	Star-delta chengeover time 0.05s, 0.1s, 0.25s, 0.5s

Note: Enter the timing range code in the ■ mark, *see page C2-50*.

■ Technical data

Type		MS4SF	MS4SF-R	MS4SY
Repeat accuracy		±0.3% at max. setting time		
Reset time		–		0.5s or less
Operating voltage range Operating temperature range Humidity		0.85 to 1.1 times rated input voltage -10 to +55°C(No icing) 35 to 85% RH (No condensation)		
Contact ratings		3A at 250V AC resistive load	5A at 250V AC resistive load	
Power consumption Insulation resistance Dielectric strength Vibration Shock		Approx. 1VA at AC, Approx. 1W at DC 100MΩ at 500V DC megger 2000V AC 1min. between current carrying part and non-current currying part 2000V AC 1min. between output contact and control circuit 1000V AC 1min. between open contacts Malfunction durability: 10 to 55Hz, 0.5mm double amplitude Mechanical durability: 10 to 55Hz, 0.75mm double amplitude Malfunction durability: 100m/s^2 Mechanical durability: 500m/s^2		
Durability	Mechanical	10 million operations		20 million operations
	Electrical	100000 operations at 250V AC 3A res. load	80000 operations at 250V AC 5A res. load	
Mass		Approx. 100g		

■ Standards

UL file No. : E44592

■ Timing and wiring diagrams

● MS4SF type off-delay timer

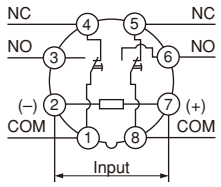

MS4SF-R type off-delay timer

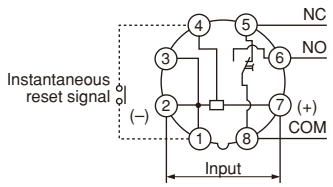

MS4SY type star-delta timer

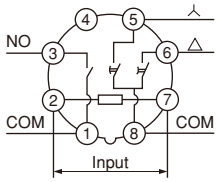

Note: Do not use terminal ③ of the MS4SF-R as a relay terminal because it is connected to terminals ① and ② in the timer.

● MS4SF type

Operation	Operation pattern	Remarks
Off-delay (Timed 2PDT contacts)	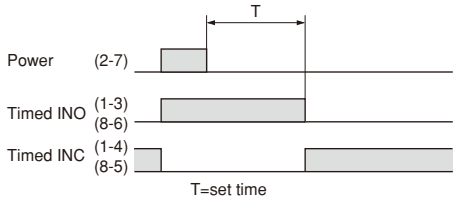	• When power is on, timed NO contact on. • When power is off, timed NO contact off after the set time has elapsed.

● MS4SF-R type

Operation	Operation pattern	Remarks
Off-delay (Timed SPDT contact)	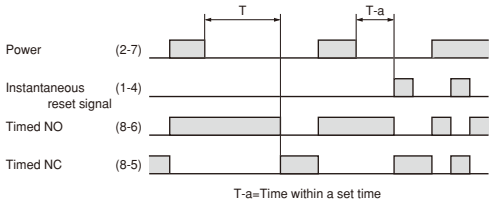	• When power is on, timed NO contact on. • When power is off, timed NO contact off after the set time has elapsed. • When the instantaneous reset signal is on, timed NO contact immediately off.

Notes: • T-a indicates some time within a set time.
• Each signal can be input by shorting the terminals.
• For the MS4SF-R, apply the instantaneous reset signal for 100 ms or longer.

● MS4SY type

Operation	Operation pattern	Remarks
⅄-Δ (with instantaneous contact 1NO)	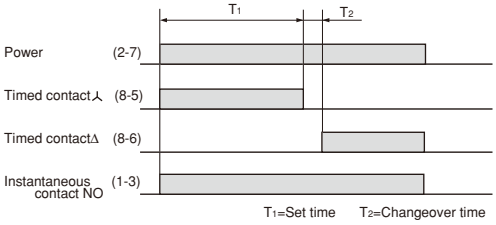	• Timed contact Timed contact ⅄ on when the power is on, and off after a set time. Timed contact Δ on after a changeover time has elapsed and opens when the power turns off. • Instantaneous contact When the power is turned on, instantaneous NO contact on. It opens when the power turns off.

■ Specifications (MS4SR)

Type	Ordering code	Input voltage	Operation mode		Contact	Timing range
MS4SR	MS4SR-AP	100-240V AC	Off-start	On-off repetitive operation	Timed: 2PDT 5A	0.5-6 (×0.1s, s, min, h) 1-12 (×0.1s, s, min, h) 2.5-30 (×0.1s, s, min, h) 5-60 (×0.1s, s, min, h)
	MS4SR-APN	100-240V AC	On-start			

■ Technical data (MS4SR)

Repeat accuracy	±0.3%±0.01s at max. setting time
Reset time	0.1s or less
Operating voltage range	0.85 to 1.1 times rated input voltage
Operating temperature range	-10 to +55°C(No icing)
Humidity	35 to 85% RH (No condensation)
Contact ratings	5A at 250V AC resistive load
Power consumption	Approx. 10VA at AC, Approx. 1W at DC
Insulation resistance	100MΩ at 500V DC megger
Dielectric strength	2000V AC 1min. between current carrying part and non-current currying part 2000V AC 1min. between output contact and control circuit 1000V AC 1min. between open contacts
Vibration	Malfunction durability: 10 to 55Hz, 0.5mm double amplitude Mechanical durability: 10 to 55Hz, 0.75 mm double amplitude
Shock	Malfunction durability: 100m/s^2 Mechanical durability: 500m/s^2
Durability	Mechanical: 20 million operations Electrical: 100000 operations at 250V AC 5A resistive load
Mass	Approx. 100g

■ Wiring diagram

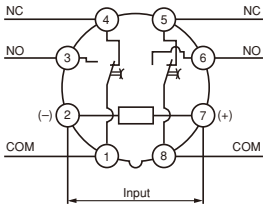

■ Operation pattern

MS4SR

Operation	Operation pattern	Remarks
Repeat (Off-start)	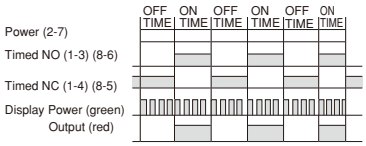	• When power is on, timed contacts on and off every set time interval. • The contacts reset when the power is removed.

MS4SR

Operation	Operation pattern	Remarks
Repeat (On-start)	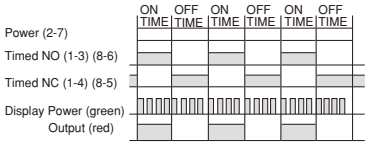	• When powe is on, timed contacts on and off every set time interval. • The contacts reset when the power is removed.

Time Delay Relays
Super Timers MS4S

■ Dimensions, mm

● Bodies

MS4SM

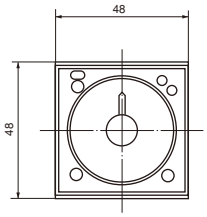

MS4SA, C, F, Y

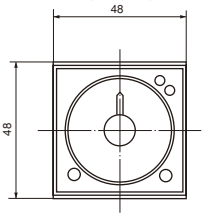

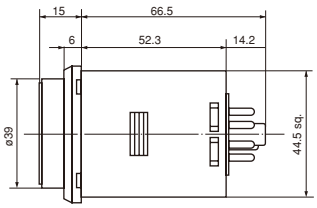

Mass : Approx. 100g

MS4SR

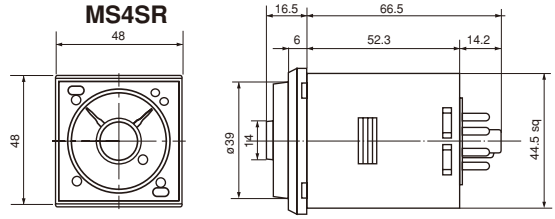

● Sockets for surface mounting

TP411X (11-pin) for MS4SM

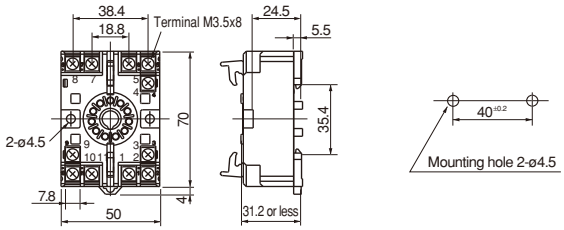

Mass : Approx. 70g

TP48X (8-pin) for MS4SM

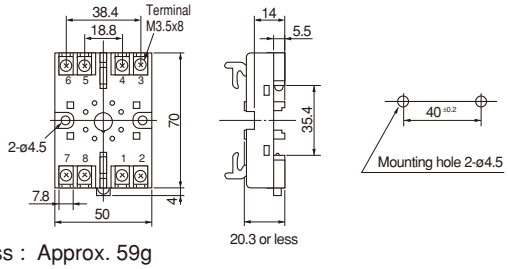

Mass : Approx. 59g

8GB, 11GB (Soldering sockets)

8GB

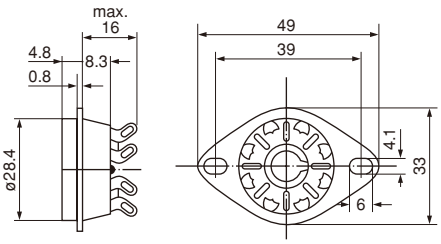

Mass : Approx. 13g

11GB

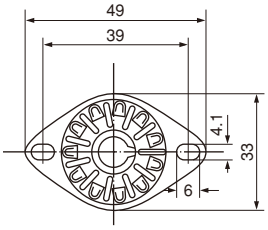

Approx. 13g

Where mounted from back side of mounting plate

Panel cutting

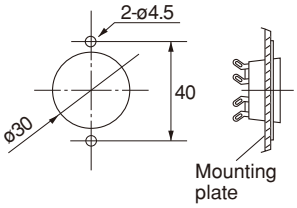

Hold-down spring/FX3

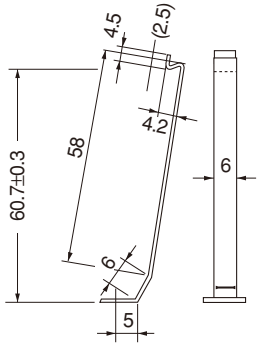

Note: Where ordering the 8GB and 11GB types of surface mounting socket, specify hold-down spring FX3 separately.

Mounting rails

TH35-7.5AL
Aluminum

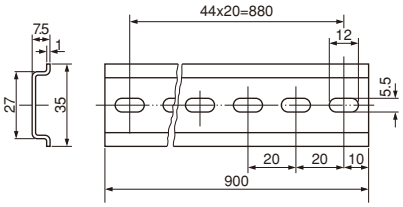

Mass : 145g

TH35-15AL
Aluminum

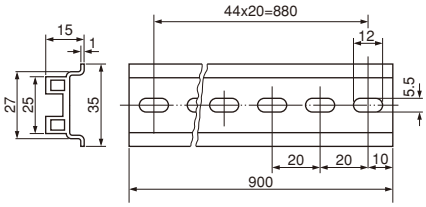

Mass : 320g

■ Dimensions, mm

● Sockets for flush mounting

TX4

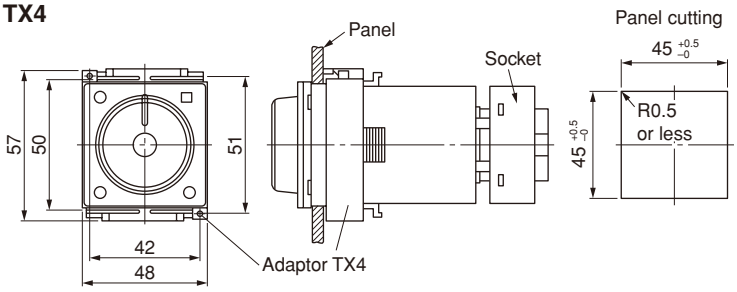

Mass : Approx. 15g

For flush mounting, an adaptor TX4 (sold separately) is required to fix the timer to the panel.
The illustration shows a timer being fixed to a panel, using the adapter TX4.

● Accessories (supplied)

TX4 adaptor

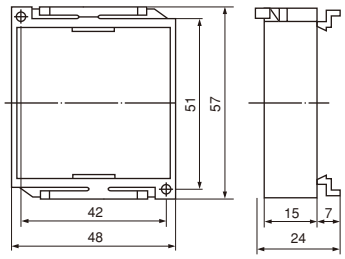

TP411SBA (11-pin) for MS4SM

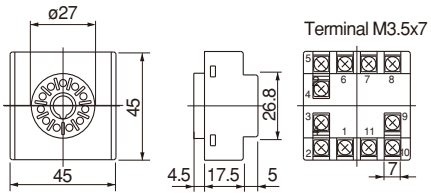

Mass : Approx. 43g

TP48SB (8-pin) for MS4SA, MS4SC

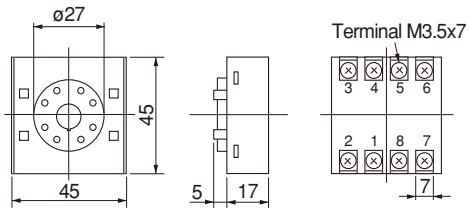

Mass : Approx. 38g

ATX2NS (Soldering socket)

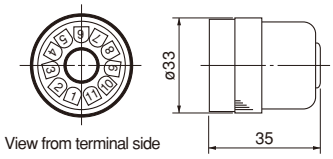

Mass : Approx. 20g

ATX1NS (Soldering socket)

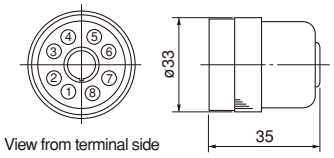

Mass : Approx. 18g

■ Notes on use

Refer to the instruction manual.

Time Delay Relays
Super Timers ST7P, 7B

Miniature size Super Timer ST7P series

The ST7P and ST7B series are compact and highly accurate Super Timers. The ST7P and ST7B are on-delay operation types.

■ Features

- These Super Timers are highly accurate. Their repeat accuracy is less than ±1% at maximum setting time.
- Timing range
  ST7P and ST7B are the single timing range types; 0.06 sec. to 24 hours.
- The large setting dial makes time setting easy.
- The LED indicators make it easy to check timer operation.
- The ST7P has been approved by the UL, c UL us and TÜV.

■ Standards

UL file No. Body: E44592
Socket: E90265
TÜV License No.: R50004818

ST7□-2

KKD05-145

■ Specifications

Single timing range types

Type	Ordering code	Contact	Operation	Timing range *(Refer to Page C2-50)*			Input voltage	Socket
ST7P-2	MS7P2-■ □	Timed: 2PDT	On-delay	0.06-0.5s	4-60s	0.5-6h	200-230V AC 50/60Hz	Screw
				0.1-1s	0.25-3min	1-12h	100-120V AC 50/60Hz	Soldering
ST7P-4	MS7P4-■ □	Timed: 4PDT		0.3-3s	1-10min	2-24h	240V AC 50/60Hz	Wire wrap
				0.4-5s	2-30min		100-110V DC	PC board
ST7B-2	MS7B2-■ □	Timed: 2PDT		1-10s	4-60min		24V DC	
				2-30s	0.2-2h		12V DC	
ST7B-4	MS7B4-■ □	Timed: 4PDT						

Notes: Enter the input voltage code in the ■ mark and timing range code in the □ mark. * Other voltages are available on request, contact FUJI.

■ Technical data

Repeat accuracy	±1% at max. setting time
Reset time	0.1s or less
Max. operating cycle	1800 cycles/h
Operating temperature range	-10°C to 50°C
Mechanical durability	50 million operations
Electrical durability	500000 operations at 220V AC 3A resistive load (ST7P-2, 7B-2) 100000 operations at 220V AC 3A resistive load (ST7P-4, 7B-4)
Operating voltage range	0.85 to 1.1 times input voltage
Contact ratings	3A at 220V AC resistive load
Power consumption	1.2VA at 100V AC, 1.5VA at 200V AC, 1.1W at 24V DC
Dielectric strength	2000V AC rms. 1min. between current carrying part and non current carrying part 1500V AC rms. 1min. between output contacts and control circuit 1000V AC rms. 1min. between open contacts
Insulation resistance	100MΩ at 500V DC megger
Vibration	Mechanical durability: 10 to 55Hz, 0.75mm double amplitude Malfunction durability: 10 to 55Hz, 0.5mm double amplitude
Shock	Mechanical durability: 1000m/s^2 Malfunction durability: 50m/s^2

Fuji Electric FA Components & Systems Co., Ltd.
Information subject to change without notice

■ Timing diagrams

ST7P-2, 7B-2

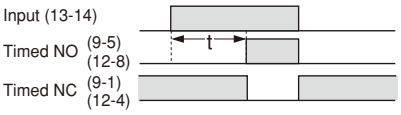

ST7P-4, 7B-4

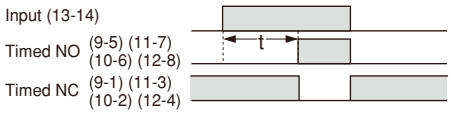

■ Wiring diagrams

ST7P-2, 7B-2

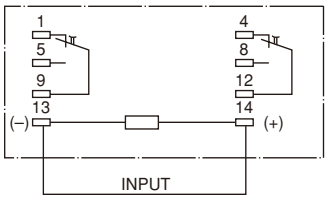

■ Dimensions, mm

● Bodies

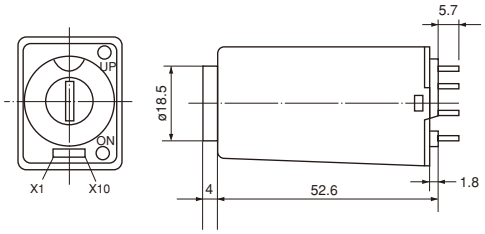

Mass: 45g

ST7□-2

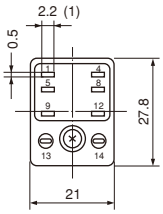

( ): For ST7B

ST7□-4

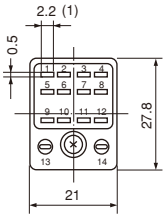

ST7P-4, 7B-4

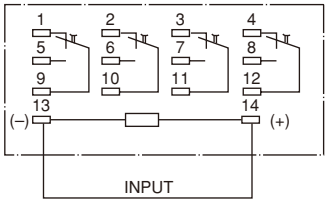

● Sockets/Screw terminal and rail mounting

TP88X1 (M3)

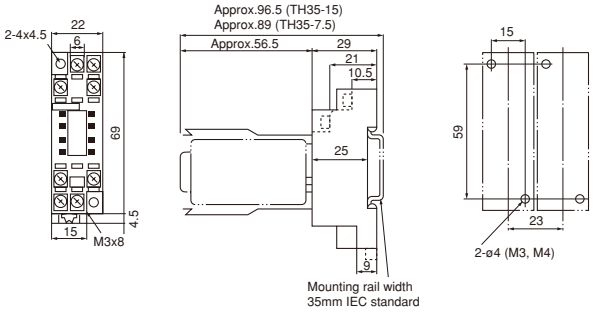

TP814X1 (M3)

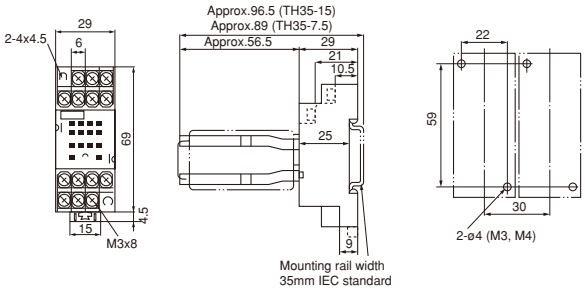

TP88X2 (M3.5)

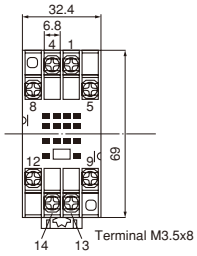

TP814X2 (M3.5)

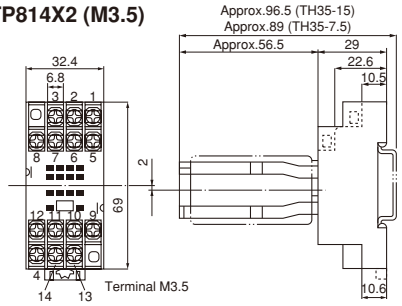

Panel drilling

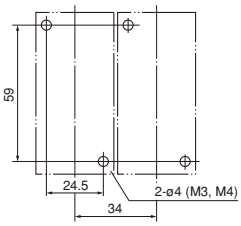

■ Socket's terminal arrangement

TP88X1, TP88X2

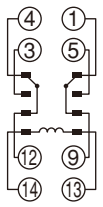

TP814X1,TP814X2

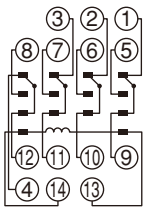

Time Delay Relays
Super Timers ST7P, 7B

■ Dimensions, mm

● Sockets/soldering

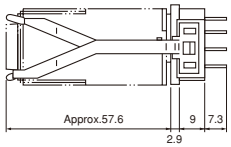

TP88

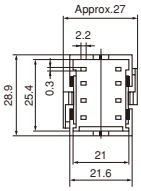

TP814

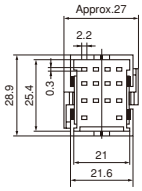

Terminal

Panel cutting
TP88, 814
TP88R2, 814R2

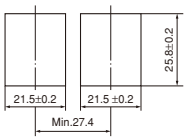

● Sockets/Wire wrap

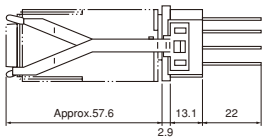

TP88R2

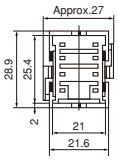

TP814R2

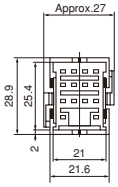

Terminal

● Sockets/PC board

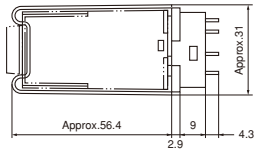

TP88B

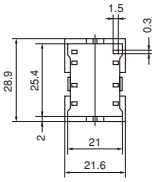

TP814B

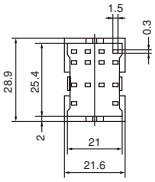

PC board drilling

TP88B

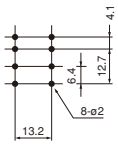

TP814B

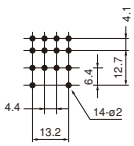

Sockets

Terminal	For ST7P-2, ST7B-2			For ST7P-4, ST7B-4			Finger protection cover	
	Type	Ordering code	Mass (g)	Type	Ordering code	Mass (g)	Type	Ordering code
Screw terminal, rail mounting	**TP88X1(M3)**	MX58X1	35	**TR814X1(M3)**	MX54X1	54	RZ52X1	RZ52X1
Screw terminal, rail mounting	**TP88X2(M3.5)**	MX58X2	47	**TP814X2(M3.5)**	MX54X2	51	RZ54X1	RZ54X1
Soldering	**TP88**	MX58	9	**TP814**	MX54	10	FX14X2	RZ54X2
Wire wrap	**TP88R2**	MX58R2	11	**TP814R2**	MX54R2	13		
PC board	**TP88B**	MX58B1	9	**TP814B**	MX54B	10		

● **Mounting rails:** *See page C2-58.*

■ Type number nomenclature

ST 7 P - 2 AC100V 5S

Super Timer — ST

Size — 7

Mounting — P
P: Plug-in (using sockets)
B: PC board

Contact — 2
2: Timed 2PDT contact (8 terminals)
4: Timed 4PDT contact (11 terminals)

Input voltage — AC100V
● **ST7P, 7B**
AC200V:200-230V AC
AC100V:100-120V AC
AC240V:240V AC
DC100V:100-110V DC
DC24V: 24V DC
DC12V: 12V DC

Timing range — 5S
● **ST7P-□, 7B□**

0.5S:	0.06-0.5s	3M:	0.25-3min
1S:	0.1-1s	10M:	1-10min
3S:	0.3-3s	30M:	2-30min
5S:	0.4-5s	60M:	4-60min
10S:	1-10s	2H:	0.2-2h
30S:	2-30s	6H:	0.5-6h
60S:	4-60s	12H:	1-12h

■ Ordering information

Specify the following:
1. Ordering code or type number of body (add a suffix of the timing range) and socket. (Socket is sold separately.)

Limit Switches, Proximity Switches, Photoelectric Switches

C

Page

Limit Switches

General information C3-1
AL-S C3-2
K244 ..... C3-11
Standard type C3-13
Reversing roller type C3-16
HK244, WK244 ..... C3-18

Proximity Switches

General information C3-20
Inductive proximity switches
PE-U12D, PE-U25NT C3-23
PE1-C, PE1-Y C3-24
PE-B C3-28
PE-X15D C3-31
PE-T C3-32
PE2-C C3-34
PE-X3D C3-38
PE-G4D C3-39
PE2-LA10D C3-40
Magnetically operated reed switches
PM1U C3-42
AES C3-44
AER C3-45

Photoelectric Switches

General information C3-46
PH1C C3-48
PH8AU C3-53

MINIMUM ORDERS

Orders amounting to **less than ¥10,000** net per order will be charged as ¥10,000 net per order plus freight and other charges.

WEIGHTS AND DIMENSIONS

Weights and dimensions appearing in this catalog are the best information available at the time of going to press. FUJI ELECTRIC FA has a policy of continuous product improvement, and design changes may make this information out of date.
Please confirm such details before planning actual construction.

INFORMATION IN THIS CATALOG IS SUBJECT TO CHANGE WITHOUT NOTICE.

Limit switches, AL-S and K244 series

■ Description

FUJI AL and K244 series limit switches have wide application in such industrial equipment as machine tools, printing machines, and transfer machines. These switches feature a sturdy aluminum die-cast housing that is highly resistant to oil, water, and dust, and long mechanical life — 10 million operations minimum.

AL series

AL-S series limit switches feature a forced contact opening mechanism. Under abnormal conditions, the mechanism forces the contacts open to prevent pitting and fusing.
Gold-plated silver contacts with scrubbing action have high reliability.

KKD17-100

AL-SK

KKD14-019

K244-xP-2

KKD14-024

K244-gR-2

K244 series

The K244 series is provided with four kinds of contact operating action: standard normal stroke, snap action, make-before-break, and extended stroke.
WK244 of the K244 series has bifurcated contacts, while HK244 features a scrubbing action mechanism. These limit switches can be used in low-level circuits of 3V, 5mA.

■ Selection guide

Basic type	**AL-S** Compact type	**K244** Standard	**HK244** For low-level circuit	**WK244** For low-level circuit
Rated voltage (max.)	550V AC, 250V DC*1	550V AC/DC		
Rated thermal current	10A (5A*1)	10A		
Operating cycles per hour	7,200	3,000		
Expected life (operations) Mechanical Electrical	10 millions 100,000 (at 125V AC, 5A res. load for snap action type)	10 millions 1 million*2 (at 220V AC, 10A res. load)	10 millions 400,000 (at 220V AC, 10A res. load)	10 millions 500,000 (at 220V AC, 2.5A res. load)
Contact arrangement	1NO+1NC	1NO+1NC, 2NO+2NC		
Contact	Single button	Single button		Bifurcated
Degree of protection (IEC)	IP67	–		
Features	Forced contact opening mechanism as standard Highly reliable gold-plated silver contacts	A wide variety of contact operating action Sealed types for oily and wet environments		
Page	*C3-2*	*C3-11*	*C3-18*	*C3-18*

*1: For snap action type
*2: 400,000 for snap action type

Limit Switches
AL-S

Forced contact opening limit switches, AL-S series

■ Description
The AL-S series limit switches feature a forced contact opening mechanism. This mechanism prevents contact welding and subsequent malfunctioning. These series therefore result in extremely dependable system controls.

■ Features
- The forced contact opening mechanism is provided so as to overcome contact problems.
- Gold-plated contacts and a self cleaning action ensure contact reliability.
- Sealed construction
  Double oil seals prevent moving parts and contacts from being contaminated by exterior oil, grime and grease, an advantage in dirty industrial locations.
- Contact mechanical design
  Contact operating mechanisms can be selected according to the application-snap, overlap and normal actions
- Conform to IEC Standard

AL-SP2
KKD17-099

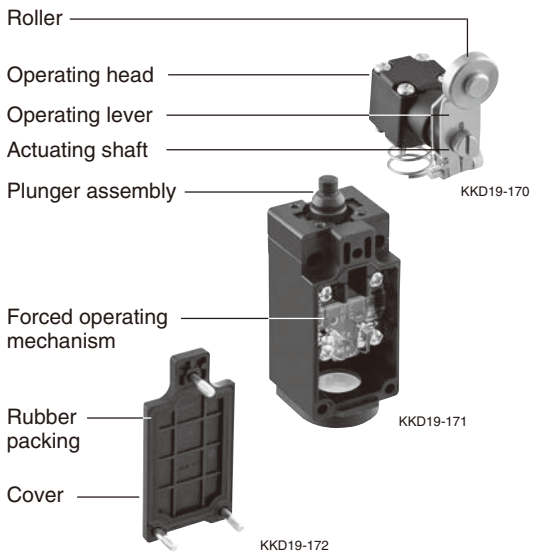

■ Forced contact opening mechanism
This mechanism does not operate under normal conditions. However, when the switch plunger overtravels under abnormal conditions the mehcanism comes into operation and forcibily opens the NC contacts thus preventing contact welding.
This action improves the dependability of electrical systems.

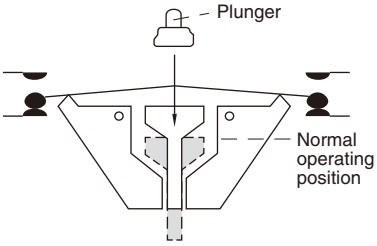

Switching is carried out at the normal operating position

Normal operating condition

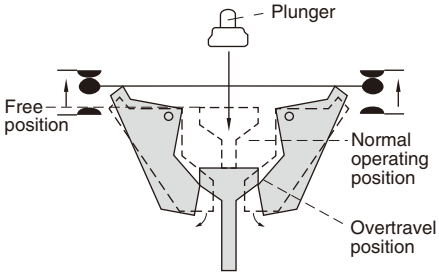

The mechanism operates to open the contacts when the plunger overtravels

Abnormal condition

■ Contact ratings

Contact action	Thermal current (A)	Make and break current * AC Voltage (V)	AC Resistive (A)	AC Inductive (A)	DC Voltage (V)	DC Resistive (A)	DC Inductive (A)
Snap	5	125	5	3	30 or less	5	3
		250	3	2	125	0.4	0.05
		500	1	0.6	250	0.2	0.03
Normal Overlap	10	24	10	10	24	7	7
		110	10	10	110	1.5	0.9
		220	10	10	220	0.63	0.28
		440	5	5	440	0.28	0.14
		550	3	3	550	0.22	0.1

*: When NO and NC contacts are wired in the same potential.

■ Technical data
Insulation resistance:
Over 100MΩ at 500V DC
Life expectancy
Mechanical: Over 10 million operations
Electrical: Snap action type
100,000 operations at
125V AC 5A res. load
Normal action type
100,000 operations at
110V AC 10A res. load
Allowable ambient temperature:
–10°C to +80°C
Degree of protection: IEC IP67

■ Changing direction of operating head

The operating head direction can be changed through 90° after having removed the screw. Care must be taken because the contact action changes according to the direction of the plunger assembly. Check for correct assembly after each step has been completed. Limit switches with adjustable head direction are AL-SN1, AL-SN2 and AL-SN3. In the case of AL-P2 and AL-SP2, the head direction of a top push roller plunger type can be shifted 90° in either direction.

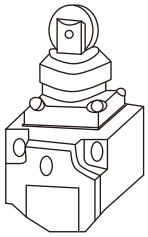

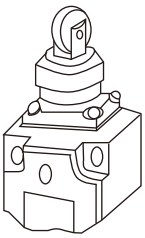

■ Adjustment of operating lever

Loosen the locking screw, turn over the lever and then retighten at the required position.
Type: AL-SN1, AL-SN2, AL-SN3

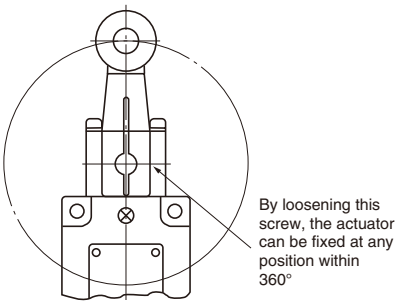

■ Adjustment of lever length

Loosen the adjustment screw, adjust the length and retighten.

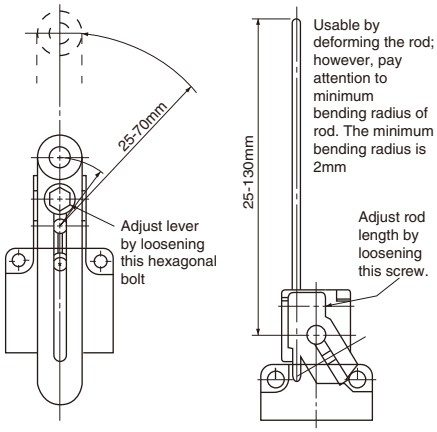

AL-SN2 **AL-SN3**

■ Roller installable on inner side

AL-SN1 **AL-SN2, SN5**

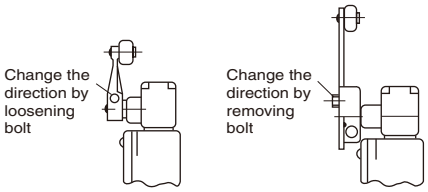

■ Cable connection

Refer to the wiring diagram for connection.
When connecting to conduit remove the plastic packing piece.

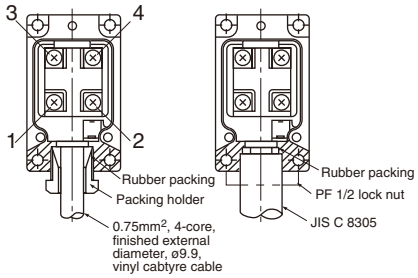

Contact: 1-2 Normally closed
3-4 Normally open

■ Dimensions:

See pages C3-10.

■ Ordering information

Specify the following:
1. Type number or ordering code

Limit Switches
AL-S

■ Type number nomenclature

AL–S N1 1

Contact action
1 : Snap action
2 : Normal action
3 : Overlap action

Type of actuator
N1 : Roller lever
N2 : Adjustable length roller lever
N3 : Adjustable length rod lever
N5 : Adjustable length roller lever (Rubber roller)
P1 : Top push rod plunger
P2 : Top push roller plunger
S1 : Wobble head coil spring rod

AL-S : Compact type

■ Ordering code

PL 1 A – 1

Contact action
1 : Snap action
2 : Normal action
3 : Overlap action

Type of actuator
A : Roller lever
B : Adjustable length roller lever
C : Adjustable length rod lever
D : Top push rod plunger
E : Top push roller plunger
H : Wobble head coil spring rod
R : Adjustable length roller lever (Rubber roller)

Series
2 : Compact type

Limit switch

■ Operating and definitions (for snap action type)

● Rotary actuation

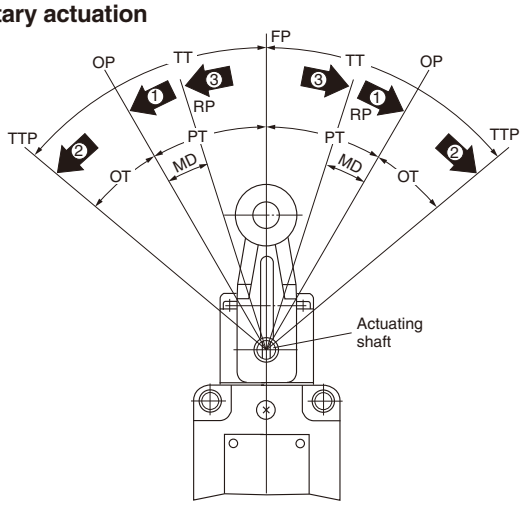

FP: Free Position
This is the position where there is no load on the actuator.
OP: Operating Position
This is the position where the actuator travels from the free position to NO contact closes.
TTP: Total Travel Position
This is the furthest position where the actuator can travel to after passing the OP without damage to the limit switch.
RP: Release Position
This is the position where the contact resets after the actuator has travelled from OP.
PT: Preoperating Travel
This indicates the travelling angle or distance from FP to OP.
OT: Overtravel
This indicates the travelling angle or distance from OP to TTP.

● Plunger actuation

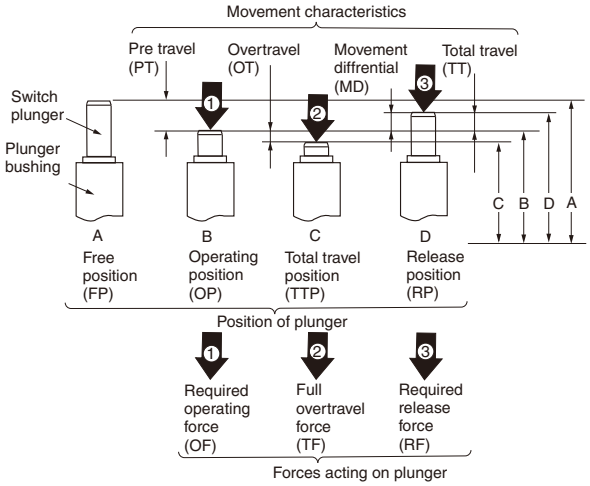

TT: Total Travel
This indicates the travelling angle or distance from FP to TTP.
MD: Movement Differential (Travel to Reset)
This indicates the travelling angle or distance from OP to the position where the contact resets.
OF: Required Operating Force ①
This indicates the minimum operating force which is required for the contact to close.
RF: Required Resetting Force ③
This indicates the force required for the contact to reset.
TF: Full Overtravel Force ②
This indicates the force required for the actuator to travel from FP to TTP.

■ Actuating slider face angle and approach speed

● Compact type

Type		AL-SN1		AL-SN2, SN5		AL-SN3	AL-SK1	AL-SK2	AL-SS1	AL-SP1	AL-SP2
Slider angle (degree)		30	45	30	45	—	30	45	—	—	30
Slider approach speed	Maximum (meter/second)	0.5	0.2	0.2	0.1	0.2	υ_1: 0.6 υ_2: 0.2	0.5 —	0.2	0.2	0.3
	Minimum (millimeter/second)	0.1	0.1	0.2	0.2	0.2	υ_1: 0.1 υ_2: 0.1	0.1 —	0.2	0.1	0.1

AL-SN1

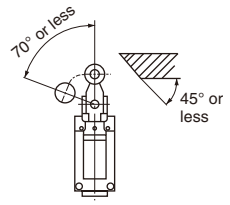

AL-SN2, SN5

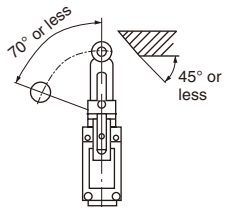

AL-SN3

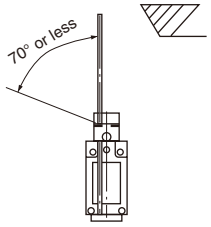

AL-SK1

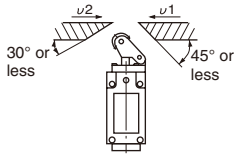

AL-SK2

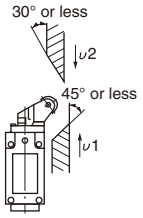

AL-SS1

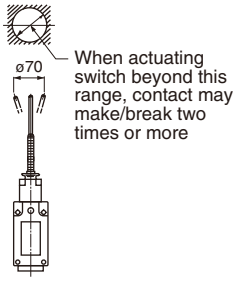

AL-SP1

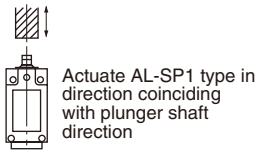

AL-SP2

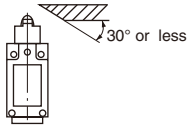

■ AL-S series/Compact-size

Description

KKD17-098

Top push rod plunger
- Operated by a vertical rod plunger.
- Momentary action

Type	Ordering code
AL-SP11	PL2D-1
AL-SP12	PL2D-2
AL-SP13	PL2D-3

KKD17-099

Top push roller plunger
- This is a limit switch where the roller is attached to the plunger.
- The direction of the roller can be shifted 90°
- Momentary action

Type	Ordering code
AL-SP21	PL2E-1
AL-SP22	PL2E-2
AL-SP23	PL2E-3

KKD17-100

Top roller lever plunger
- This limit switch is used to detect objects which travel horizontally from left to right or right to left while turning.
- Used in packing and other conveyors.

Type	Ordering code
AL-SK11	PL2P-1
AL-SK12	PL2P-2
AL-SK13	PL2P-3

KKD17-101

Reversing top roller lever plunger
- This type is designed to detect the movements in the vertical direction.

Type	Ordering code
AL-SK21	PL2Q-1
AL-SK22	PL2Q-2
AL-SK23	PL2Q-3

KKD17-105

Adjustable length rubber roller lever (ø40)
- The lever length can be adjusted between 30mm and 76mm
- Spring return
- The graduated scales on the lever facilitate adjustment

Type	Ordering code
AL-SN51	PL2C-1

Description

KKD17-102

Roller lever
- The angle from the free position to the maximum travel position is 70°
- Spring return

Type	Ordering code
AL-SN11	PL2A-1

KKD17-103

Adjustable length roller lever
- The lever length can be adjusted between 25mm and 76mm.
- Spring return
- The graduated scales on the lever facilitate adjustment

Type	Ordering code
AL-SN21	PL2B-1

KKD17-104

Adjustable length rod lever
- The ø3.2mm stainless steel rod can be extended up to 130mm max.
- Spring return
- The rod can be used by bending. (Radial 2mm min.)

Type	Ordering code
AL-SN31	PL2C-1

KKD18-001

Wobble head coil spring rod
- The length of rod is 113mm from the head.
- Can be operated from any direction.
- Require little torque

Type	Ordering code
AL-SS11	PL2H-1

■ Operating characteristics

Compact type (Snap action)

Type	AL-SP11	AL-SP21	AL-SK11	AL-SK21	AL-SN11 *1	AL-SN21 *1	AL-SN31	AL-SN51 *2	AL-SS11
Required operating force OF (max.)	4.5N	8.5N	4N	4N	7N	7N	7N	7N	1.5N
Required resetting force RF (min.)	2N	4.5N	1.8N	1.8N	0.5N	0.5N	0.5N	0.5N	—
Preoperating travel PT (min.)	2mm	2mm	2.5mm	2.5mm	30°	30°	30°	30°	30mm
Overtravel OT (min.)	4mm	3mm	5mm	5mm	40°	40°	40°	40°	—
Movement differential (Travel to reset) MD (max.)	1mm	1mm	1.8mm	1.8mm	8°	8°	8°	8°	—

Notes: *1 At lever or rod level length 25mm
*2 At lever or rod level length 30mm

Compact type (Normal action, overlap action)

	Normal action			Overlap action		
Type	AL-SP12	AL-SP22	AL-SK□2	AL-SP13	AL-SP23	AL-SK□3
Required operating force OF (max.)	7N	10.5N	6.3N	7N	10.5N	6.3N
Movement to NC contact open	1.5mm	1.5mm	2mm	3mm	3mm	4mm
Movement to NO contact closed	3mm	3mm	4mm	1.5mm	1.5mm	2mm
Total travel TT (min., max.)	6mm	6mm	8mm	6mm	6mm	8mm

Limit Switches
AL-S

■ Accessories

Description	Operating	Type	Ordering code
Standard seal connector	Cable dia. ø7 – ø11 (øD)	**ALX-510**	PL1XW-B
	(for AL-S type)		
Complete type sealed conduit (Metal)	Cable dia. ø6 – ø9 (øD)	**ALX-013**	PL1XW-C
	ø8 – ø11	**ALX-014**	PL1XW-D
	ø12 – ø14	**ALX-015**	PL1XW-E
	(for AL-S type, AL1-S type)		

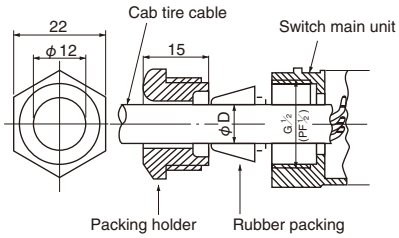

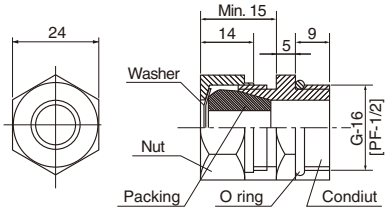

■ Actuators

● For AL-S series

Description	Type
Roller lever	**ALX-501**

SI-316

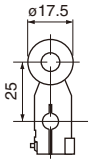

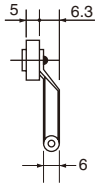

Stainless steel roller

Adjustable length roller lever	**ALX-503**

KKD07-033

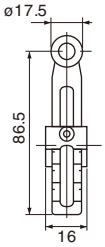

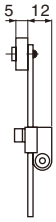

Stainless steel roller

Adjustable length rod lever	**ALX-505**

KKD07-034

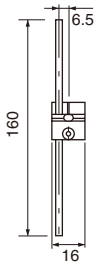

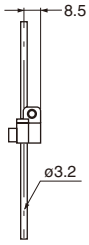

Stainless steel rod

Limit Switches
AL-S

■ Dimensions, mm (AL-S series/Compact size)

Top push rod plunger
AL-SP1

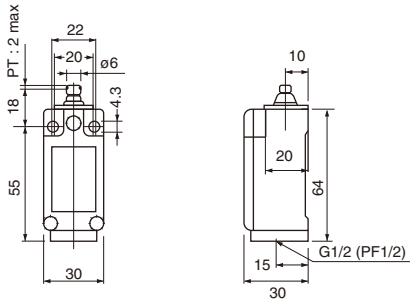

Mass: 55g

Polyamide resin plunger

Top push roller plunger
AL-SP2

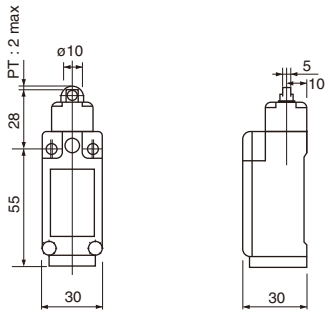

Mass: 60g

Stainless steel roller

Top roller lever plunger
AL-SK1

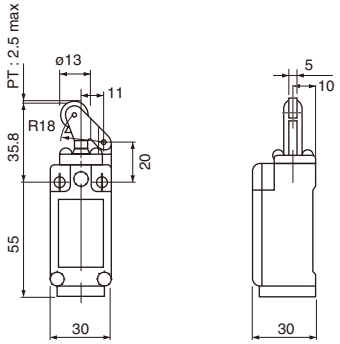

Mass: 65g

Stainless steel roller

C3

Reversing top roller lever plunger
AL-SK2

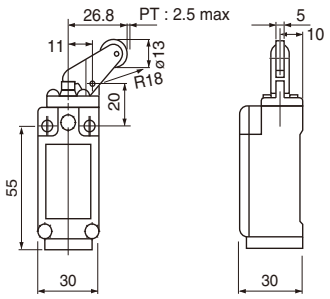

Mass: 65g

Stainless steel roller

Roller lever
AL-SN1

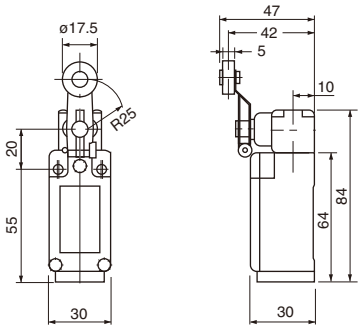

Mass: 100g

Stainless steel roller

Adjustable length roller lever
AL-SN2

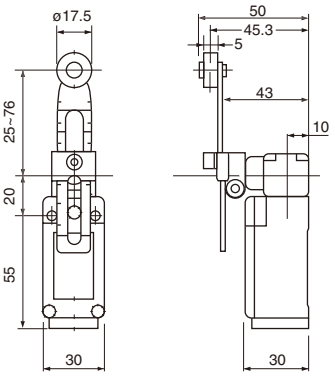

Mass: 120g

Stainless steel roller

Adjustable length rod lever
AL-SN3

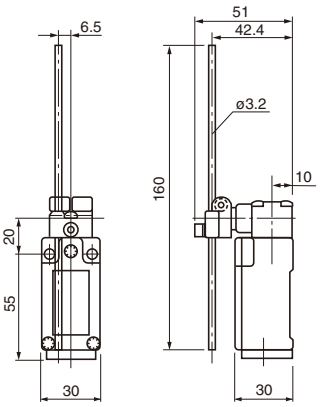

Mass: 105g

Stainless steel rod

Wobble plastic head spring rod
AL-SS1

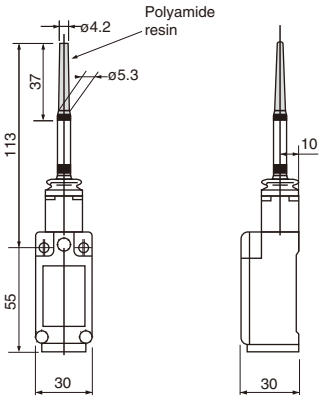

Mass: 80g

Stainless steel coil spring

Adjustable length rubber roller lever
AL-SN51

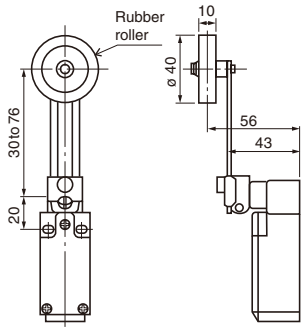

Mass: 130g

Rubber roller

Momentary-contact limit switches K244 series

■ Description

FUJI K244 type limit switches have an excellent performance.
K244 limit switches employ a highly dependable and long lasting double break silver alloy contact system.
These can be expected to perform more than 10 million mechanical operations and a rate of 3,000 operations per hour.
The large variety of operating types such as standard stroke, snap-action type, make-before-break type and extended stroke type, etc. allow you to select a suitable limit switch that fully meets your requirements.
K244 limit switches are widely used for industrial machinery such as machine tools, printing machines, conveyors, automatic machines and door interlocking and similar applications.
The aluminum die-cast housing can also be supplied in an oil and water proof version.

■ Technical data

Insulation resistance:
Over 100MΩ at 500V DC
Dielectric strength:
2500V AC rms 1 minute
Max. operating cycle:
3000 cycles per hour
Life expentancy
Mechanical: 10 million operations
Electrical:
- K244-2, 2U and 2V
  3.3 million operations at 24 to 550V AC 3A
- K244-2S
  1.3 million operations at 24 to 550V AC 3A

■ Ordering information

Specify the following:
1. Type number or ordering code

Example
Limit switch ..... PL
With enclosure 5
Standard contact ..... N
Cast-metal clad enclosure ..... G
With top roller lever plunger ..... R
Contact, normal action 1NO+1NC 22
Ordering code PL5NGR22

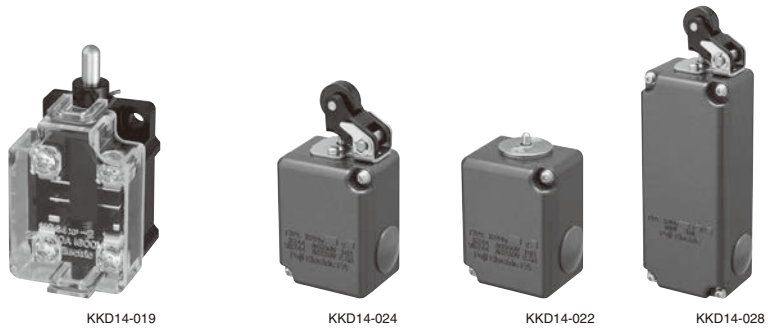

K244xP-2 **K244gR-2** **K244g-2** **K244gR-2/2**

■ Ratings

Type	Thermal current (A)	Making current (A)	Breaking current *1 AC Voltage (V)	AC Current (A)	DC Voltage (V)	DC Current (A) Resistive	DC Current (A) Inductive
K244-2	10	50	24	10	24	10	10
K244-2U			110	10	110	2.2	1.3
K244-2V			220	10	220	0.9	0.4
			440	10	440	0.4	0.2
			550	10	550	0.32*2	0.15*2
K244-2S	10	50	24	10	24	7	7
			110	10	110	1.5	0.9
			220	10	220	0.63	0.28
			440	10	440	0.28	0.14
			550	10	550	0.22*2	0.1*2

Notes: *1 When NO and NC contacts are wired in the same potential.
*2 Value of the breaking current when opposite contacts are not applied with potential.

■ Type number nomenclature

K244 □□ - 2 □

Basic type

Enclosure
xP: With transparent cover
g: Cast-metal clad
go: Cast-metal clad oil-tight
gw: Cast-metal clad water-tight

Actuator
Blank: Top push rod plunger
R: Top roller lever plunger

Contact type
Blank: Standard contact (Normal stroke)
S: Snap action contact
U: Make-before-break contact
V: Extended stroke

Contact arrangement
2: 1NO+1NC
2/2: 2NO+2NC

■ Ordering code

PL 5 N G N – 22

Product category
PL: Limit switch

Enclosure
4: Without enclosure
5: With enclosure

Contact
N: Standard
W: Bifurcated
H: Scrubbing action

Enclosure type
G: Cast-metal clad
L: Cast-metal clad oil-tight
W: Cast-metal clad water-tight

Contact arrangement
22: 1NO+1NC, normal action
21: 1NO+1NC, snap action
23: 1NO+1NC, make-before-break
25: 1NO+1NC, extended stroke
42: 2NO+2NC, normal action
41: 2NO+2NC, snap action
43: 2NO+2NC, make-before-break
45: 2NO+2NC, extended stroke
46: 2NO+2NC, complex

Roller head position
N: Top push rod plunger
R: Top roller lever plunger
W: Reversing, right-hand side roller

■ Actuating slider face angles and approach speeds

Although K244 limit switches have an excellent performance they should not be operated at an extremely high speed or extremely low speeds, since these conditions will cause contact trouble and reduce the mechanical life expectancy of the devices. The slider face angles and approach speeds should be kept within the following recommendations.

● Push rod plunger type

This type of switch obtains the movement from the vertical travel of the rod.

Speed : Max. 1m/sec
Min. 0.015m/sec

Snap-action types can be used at speeds less than the minimum value.

● Roller lever type

The actuating slider face angles and speeds should be within the following range.

The maximum angle of the slider face:
α_1=45° α_2=30°

Snap-action type switches can be used at speeds less than the minimum value.

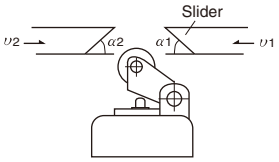

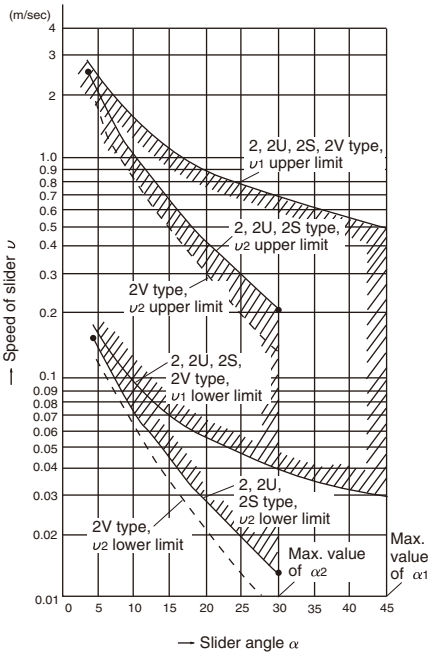

■ Travel operating force curve (Typical example)

The curve indicates forces to operate the contact.

Standard type
K244g-2

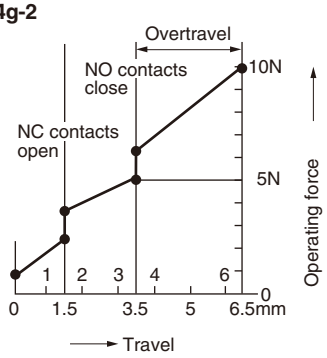

K244gR-2

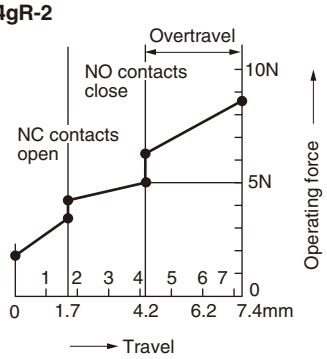

Snap action contact type
K244g-2S

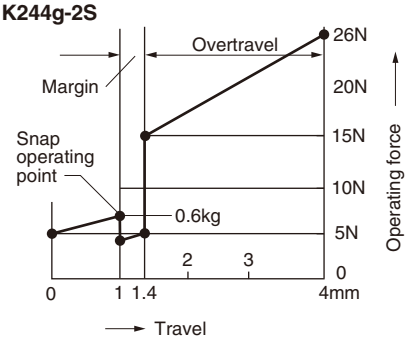

K244gR-2S

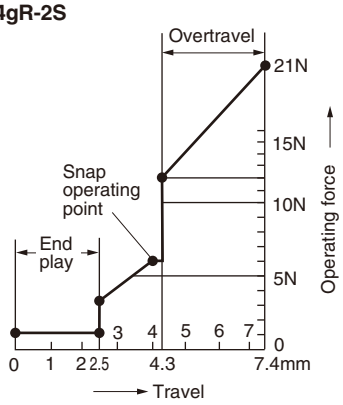

■ Changing direction of operating roller head

Roller head positions can be shifted by 90° in each direction. The head is attached at the standard position when shipped from factory.

Standard **ℓ type**

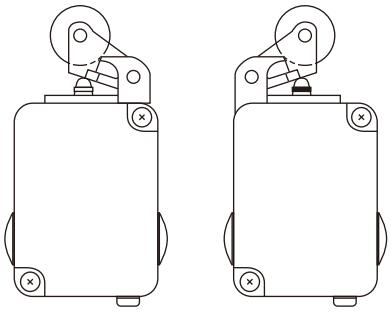

f type

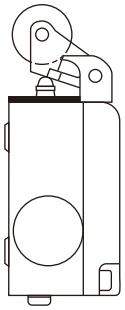

■ Cable connection

Threaded conduit entrances are provided at 3 locations–left, right and lower side of the limit switch housing. Knockout the plug to carry out wiring. Do not remove plugs from holes not requiring wiring.

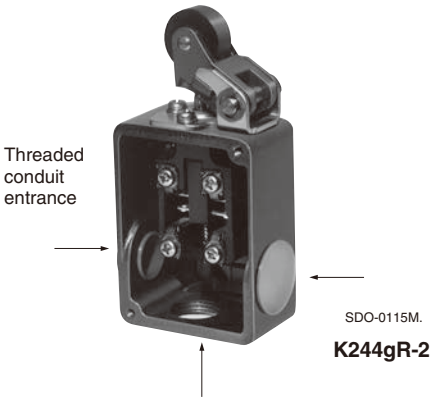

■ K244 series/Standard

Description	Contact arrangement	Terminal No.	Travel ▩ Contact closed □ Contact open	Type	Ordering code	Dimensions, mm
Top push rod plunger with transparent plastic cover	1NO+1NC		S (mm)			
Normal stroke			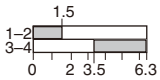	**K244xp-2**	PL4NN-22	
Snap-action			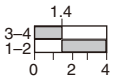	**K244xp-2S**	PL4NN-21	
Make-before-break			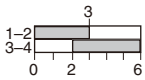	**K244xp-2U**	PL4NN-23	
Extended stroke			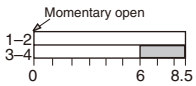	**K244xp-2V**	PL4NN-25	
KKD14-019						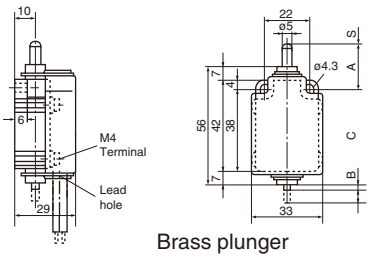 Brass plunger

	-2	-2S	-2U	-2V
A	21	19	21	21
B	1.5	1.5	1.5	1.0
C	6.5	1.4	6	8.5

Mass: 60g

Description	Contact arrangement	Terminal No.	Travel ▩ Contact closed □ Contact open	Type	Ordering code	Dimensions, mm
Top push rod plunger cast-metal clad	1NO+1NC		S (mm)			
Normal stroke			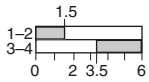	**K244g-2**	PL5NGN-22	
Snap-action			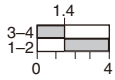	**K244g-2S**	PL5NGN-21	
Make-before-break			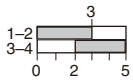	**K244g-2U**	PL5NGN-23	
Extended stroke			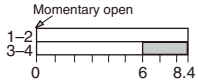	**K244g-2V**	PL5NGN-25	
KKD14-022						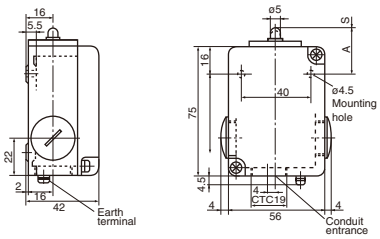 Brass plunger

	-2	-2S	-2U	-2V
A	26	24	26	26

Mass: 200g

Description	Contact arrangement	Terminal No.	Travel ▩ Contact closed □ Contact open	Type	Ordering code	Dimensions, mm
Top push rod plunger oiltight and watertight cast-metal clad	1NO+1NC		S (mm)			
Snap-action				Oiltight **K244go-2S**	PL5NLN-21	
				Watertight **K244gw-2S**	PL5NWN-21	
KKD14-023						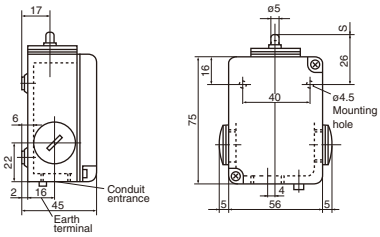 Brass plunger

Mass: 210g

■ Contact action (Typical)

Contact	Standard type (Normal stroke)	Snap action contact	Make-before-break contact	Extended stroke
Contact diagram				
Contact travel ▩ : Contact closed □ : Contact open	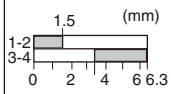		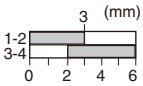	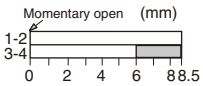

Limit Switches
K244 Standard type

■ K244 series/Standard

Description	Contact arrangement	Terminal No.	Travel ■ Contact closed □ Contact open	Type	Ordering code
Top roller lever plunger cast-metal clad	1NO+1NC		S (mm)		
Normal stroke		1–2, 3–4	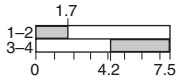 1.7; 0; 4.2; 7.5	**K244gR-2**	PL5NGR-22
Snap-action		3–4, 1–2	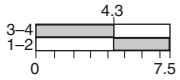 4.3; 0; 7.5	**K244gR-2S**	PL5NGR-21
Make-before-break		1–2, 3–4	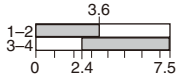 3.6; 0; 2.4; 7.5	**K244gR-2U**	PL5NGR-23
Extended stroke		1–2, 3–4	0.5; 0; 7.5; 10	**K244gR-2V**	PL5NGR-25

KKD14-024

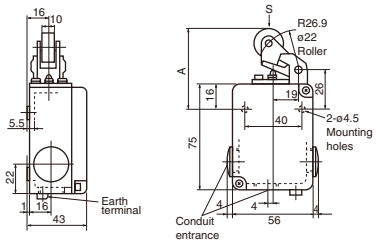

Phenal-formaldehyde roller

	-2	-2S	-2U	-2V
A	55	55	55	57

Mass: 240g

Description	Contact arrangement	Terminal No.	Travel	Type	Ordering code
Top roller lever plunger oiltight and watertight cast-metal clad	1NO+1NC		S (mm)		
Snap-action		3–4, 1–2	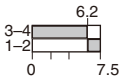 6.2; 0; 7.5	Oiltight **K244goR-2S**	PL5NLR-21
				Watertight **K244gwR-2S**	PL5NWR-21

KKD14-025

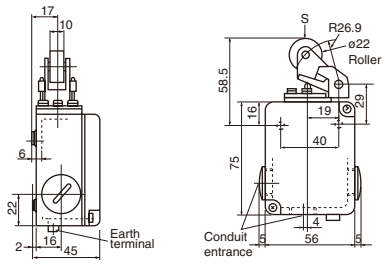

Phenal-formaldehyde roller

Mass: 250g

Description	Contact arrangement	Terminal No.	Travel	Type	Ordering code
Top push rod plunger cast-metal clad	2NO+2NC		S (mm)		
Normal stroke	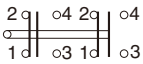	1–2, 3–4	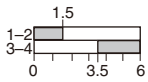 1.5; 0; 3.5; 6	**K244g-2/2**	PL5NGN-42
Snap-action	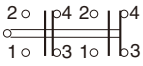	3–4, 1–2	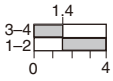 1.4; 0; 4	**K244g-2S/2S**	PL5NGN-41
Make-before-break	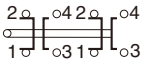	1–2, 3–4	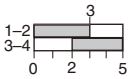 3; 0; 2; 5	**K244g-2U/2U**	PL5NGN-43
Extended stroke	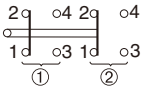	②{1–2, 3–4} ①{1–2, 3–4}	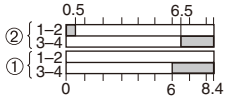 0.5; 6.5; 0; 6; 8.4	**K244g-2V/2V**	PL5NGN-45
Complex (Normal stroke + Make-before-break)	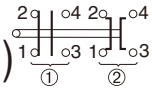	②{1–2, 3–4} ①{1–2, 3–4}	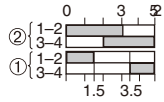 0; 3; 5; 1.5; 3.5	**K244g-2/2U**	PL5NGN-46

KKD14-026

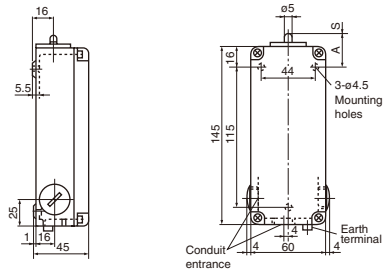

Brass plunger

	2/2	2S/2S	2U/2U	2V/2V	2/2U
A	26	24	26	26	26

Mass: 410g

Description	Contact arrangement	Terminal No.	Travel	Type	Ordering code
Top push rod plunger oiltight and watertight cast-metal clad	2NO+2NC		S (mm)		
Snap-action	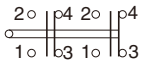	3–4, 1–2	1.4; 0; 2.4	Oiltight **K244go-2S/2S**	PL5NLN-41
				Watertight **K244gw-2S/2S**	PL5NWN-41

KKD14-027

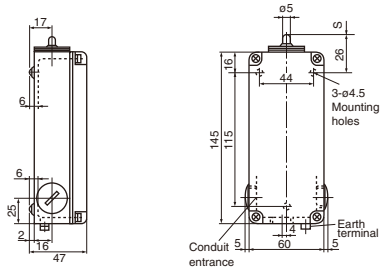

Mass: 420g

Brass plunger

Fuji Electric FA Components & Systems Co., Ltd.
Information subject to change without notice

■ K244 series/Standard

Description	Contact arrangement	Terminal No.	Travel ■ Contact closed □ Contact open	Type	Ordering code	Dimensions, mm
Top roller lever plunger cast-metal clad	2NO+2NC		S (mm)			
KKD14-028	Normal stroke	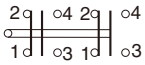	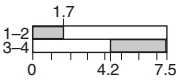	**K244gR-2/2**	PL5NGR-42	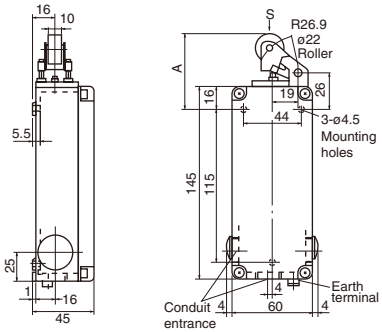
	Snap-action	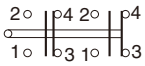	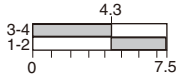	**K244gR-2S/2S**	PL5NGR-41	
	Make-before-break	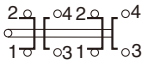	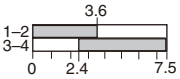	**K244gR-2U/2U**	PL5NGR-43	
	Extended stroke	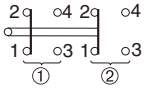	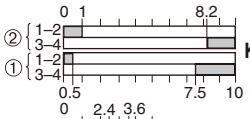	**K244gR-2V/2V**	PL5NGR-45	
	Complex (Normal stroke + Make-before-break)	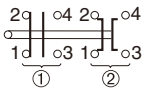	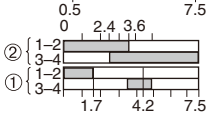	**K244gR-2/2U**	PL5NGR-46	Phenal-formaldehyde roller
						Mass: 440g
Top roller lever plunger oiltight and watertight cast-metal clad	2NO+2NC		S (mm)			
KKD14-029	Snap-action	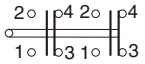	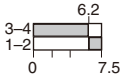	Oiltight **K244goR-2S/2S**	PL5NLR-41	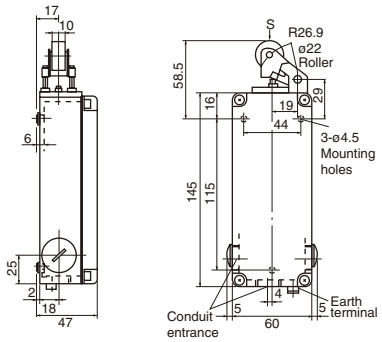
				Watertight **K244gwR-2S/2S**	PL5NWR-41	
						Phenal-formaldehyde roller
						Mass: 450g

	2/2	2S/2S	2U/2U	2V/2V	2/2U
A	55	55	55	57	55

C3

Limit Switches
K244 reversing roller type

Reversing roller lever momentary-contact limit switches, K244g□R

■ Description

These limit switches are designed to detect the movements in the vertical direction. The switch body is identical to the standard type except that one roller is extended from the housing.
The performance is the same as for the standard type.

● **Standard**

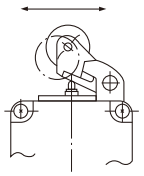

● **Reversing**

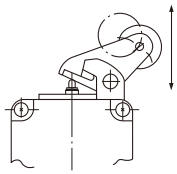

Right side roller

KKD14-030

K244gRA-2

KKD14-032

K244gRA-2/2

■ Ratings

Type	Thermal current (A)	Making current (A)	Breaking current *1 AC Voltage (V)	AC Current (A)	DC Voltage (V)	Current (A) Resistive	Current (A) Inductive
K244gRA-2	10	50	24	10	24	10	10
K244gRA-2U			110	10	110	2.2	1.3
K244gRA-2V			220	10	220	0.9	0.4
			440	10	440	0.4	0.2
			550	10	550	0.32	0.15*2
K244gRA-2S	10	50	24	10	24	7	7
			110	10	110	1.5	0.9
			220	10	220	0.63	0.28
			440	10	440	0.28	0.14
			550	10	550	0.22	0.1*2

Notes: *1 When NO and NC contacts are wired in the same polarity.
*2 Opposite contacts are not permitted to carry potential.

■ Actuating slider face angles and approach speeds

K244 limit switches have an outstanding performance and will have a long service life under normal conditions. They are designed to carry out 3,000 operations per hour but if they are operated at an extremely high speeds or on the contrary at extremely low speeds contact trouble could develop which would reduce the mechanical life expectancy of the devices.
Reversing roller levers are provided with sliders in their vertical direction. The slider face angles and approach speeds should be kept within the range shown by curves. The maximum angle of the actuating slider is α_1=45°, α_2=30° and under. Snap-action types can be used at speeds less than the minimum value given.

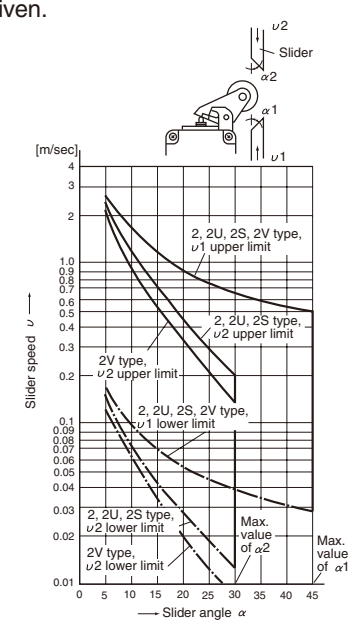

■ Ordering information

Specify the following
1. Type number or ordering code

Example
Limit switch ..... PL
With enclosure 5
Standard contact ..... N
Cast-metal clad enclosure ..... G
With reversing roller plunger ..... W
Contact 1NO+1NC, snap-action ..... -21
Ordering code PL5NGW-21

■ Ordering code: *See page C3-11.*

■ Travel operating force: *See page C3-12.*

■ Cable connection: *See page C3-12.*

■ Changing direction of operating head

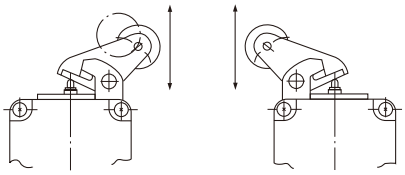

Right side roller **Left side roller**

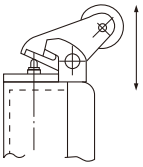

Front-side roller

■ Type number nomenclature

K244 □□□ - 2 □

Basic type

Enclosure
g: Cast-metal clad
go: Cast-metal clad oil-tight
gw: Cast-metal clad water-tight

Actuator
R: Top roller lever plunger
A: Reversing roller

Contact type
Blank: Standard contact (Normal stroke)
S: Snap-action contact
U: Make-before-break contact
V: Extended stroke contact

Contact arrangement
2: 1NO+1NC
2/2: 2NO+2NC

■ Technical data: Same as standard type, *see page C3-11.*

Fuji Electric FA Components & Systems Co., Ltd.
Information subject to change without notice

■ K244 series/Reversing roller

Description	Contact arrangement	Terminal No.	Travel ■ Contact closed □ Contact open	Type	Ordering code
Reversing top roller lever plunger cast-metal clad	1NO+1NC		S (mm)		
Normal stroke			1.8; 1–2, 3–4; 0 2 3.8 6.6	**K244gRA -2**	PL5NGW-22
Snap-action			3.6; 3-4, 1-2; 0 6.2	**K244gRA -2S**	PL5NGW-21
Make-before-break			3; 1–2, 3–4; 0 2 6	**K244gRA -2U**	PL5NGW-23
Extended stroke			Momentary open; 1–2, 3–4; 0 5.7 8.3	**K244gRA -2V**	PL5NGW-25
Reversing top roller lever plunger oiltight and watertight cast-metal clad	1NO+1NC		S (mm)		
Snap-action			4.6; 3–4, 1–2; 0 6.6	Oiltight **K244goRA -2S**	PL5NLW-21
				Watertight **K244gwRA -2S**	PL5NWW-21
Reversing top roller lever plunger cast-metal clad	2NO+2NC		S (mm)		
Normal stroke			1.8; 1–2, 3–4; 0 2 3.8 6.6	**K244gRA -2/2**	PL5NGW-42
Snap-action			3.6; 3-4, 1-2; 0 6.2	**K244gRA -2S/2S**	PL5NGW-41
Make-before-break			3; 1–2, 3–4; 0 2 6	**K244gRA -2U/2U**	PL5NGW-43
Extended stroke			Momentary open; 1–2, 3–4; 0 5.7 8.3	**K244gRA -2V/2V**	PL5NGW-45
Complex (Normal stroke + Make-before-break)			0 2 3 6; 1–2, 3–4 ②; 1–2, 3–4 ①; 1.8 3.8 7.5	**K244gRA -2/2U**	PL5NGW-46
Reversing top roller lever plunger oiltight and watertight cast-metal clad	2NO+2NC		S (mm)		
Snap-action			4.6; 3–4, 1–2; 0 6.6	Oiltight **K244goRA -2S/2S**	PL5NLW-41
				Watertight **K244gwRA -2S/2S**	PL5NWW-41

KKD14-030

KKD14-031

KKD14-032

KKD14-033

Dimensions, mm

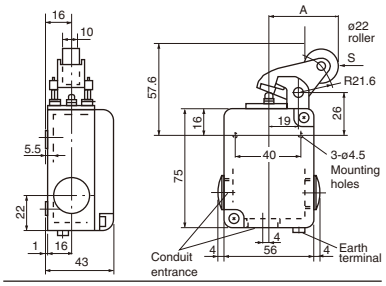

	-2	-2S	-2U	-2V
A	43.6	43.6	43.6	45.8

Mass: 240g Phenal-formaldehyde roller

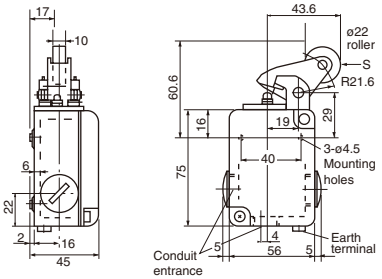

Mass: 250g Phenal-formaldehyde roller

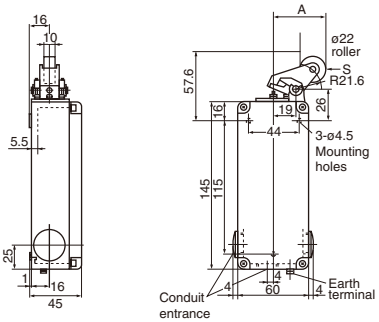

Phenal-formaldehyde roller

	2/2	2S/2S	2U/2U	2V/2V	2/2U
A	43.6	43.6	43.6	45.8	43.6

Mass: 440g

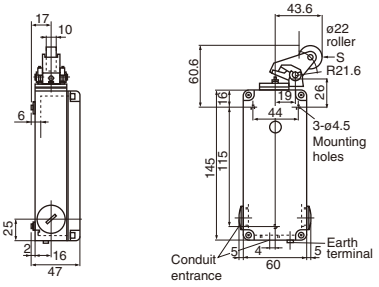

Phenal-formaldehyde roller

Mass: 450g

Limit Switches
HK244, WK244

Momentary-contact limit switches for low voltage circuit HK244 and WK244

■ Description

HK244 and WK244 limit switches have been developed for use in low voltage and low current circuits. They will operate effectively in 3 Volts AC or DC, 5mA circuits although they are recommended that they are used in 48 Volts or 110 Volts circuits for best results.

HK244 limit switches

HK244 limit switches are provided with pure silver contacts. The movable contact carries out a scrubbing action during make/break operation ensuring good connections at all times.
The switch body is molded from a high performance resin, and versions with transparent plastic covers and with aluminum die-cast housing are also available.

WK244 limit switches

The bifurcated contact is made of pure silver and like the HK244 series they are also suitable for use with low voltage circuits. The dimensions and operating strokes are similar to the standard type.

■ Ordering information

Specify the following:
1. Type number or ordering code

Example

Limit switch ..... PL
With enclosure 5
Scrubbing contact ..... H
Cast-metal clad enclosure ..... G
Top roller lever plunger ..... R
Contact 1NO+1NC, normal stroke ..... -22
Ordering code PL5HGR-22

■ Dimensions, mm

Same as standard type limit switch K244 series. *See page C3-13 to C3-15, C3-17.*

■ Ordering code: *See page C3-11.*

KKD14-021
WK244xp-2

KKD14-024
HK244gR-2

KKD14-022
HK244g-2

■ Ratings

HK244

Thermal current (A)	Making current (A)	Breaking current *1 AC Voltage (V)	AC Current (A)	DC Voltage (V)	DC Current (A) Resistive	DC Current (A) Inductive
10	50	24	10	24	7	7
		110	10	110	1.5	0.9
		220	10	220	0.63	0.28
		440	10	440	0.28	0.14
		550	10	550	0.22*2	0.1*2

WK244

Thermal current (A)	Making current (A)	Breaking current *1 AC Voltage (V)	AC Current (A)	DC Voltage (V)	DC Current (A) Resistive	DC Current (A) Inductive
10	12.5	110	2.5	110	1.5	0.2
		220	2.5	220	0.63	–

Notes: *1 When NO and NC contacts are wired in same polarity.
*2 Opposite contacts are not permitted to carry potential.

■ Contacts

HK244

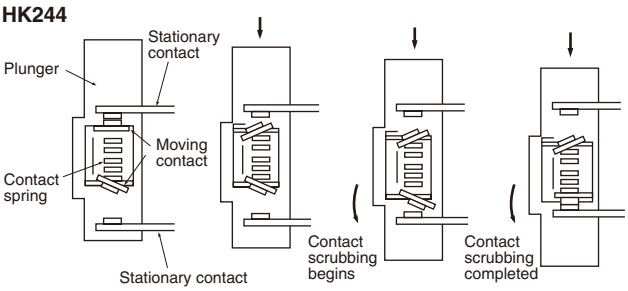

Process of scrubbing contact

WK244

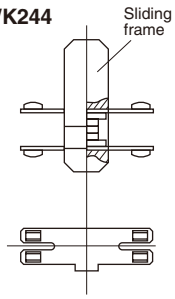

Bifurcated contact

■ Technical data

HK244

Insulation resistance: Over 100MΩ at 500VDC
Dielectric strength: 2500V AC rms 1 minute
Max. operating cycle: 3000 cycles per hour
Life expectancy Mechanical: 10 million operations
Electrical: 1.3 million operations at 24 to 550V AC 3A
Allowable ambient temperature: –5° to +60°C

WK244

Insulation resistance: Over 100MΩ at 500VDC
Dielectric strength: 2500VAC rms 1 minute
Max. operating cycle: 3000 cycles per hour
Life expectancy Mechanical: 10 million operations
Electrical: 1 million operations at 220V AC 1.5A
Allowable ambient temperature: –5° to +60°C

■ HK244 and WK244 series

Description	Contact arrangement	Travel (mm) of HK series (WK series: Same as standard series, pages C3-13 to C3-15)	HK series With scrubbing contact action Type	Ordering code	WK series With bifurcated contact Type	Ordering code	Dimensions (Same as K244)
Top push rod plunger transparent plastic cover	1NO+1NC						
Normal stroke		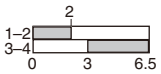	**HK244xp-2**	PL4HGN-22	**WK244xp-2**	PL4WGN-22	*Page C3-13*
Make-before-break		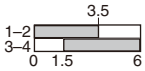	**HK244xp-2U**	PL4HGN-23	**WK244xp-2U**	PL4WGN-23	*Page C3-13*
Top push rod plunger cast-metal clad	1NO+1NC						
Normal stroke		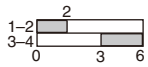	**HK244g-2**	PL5HGN-22	**WK244g-2**	PL5WGN-22	*Page C3-13*
Make-before-break		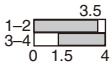	**HK244g-2U**	PL5HGN-23	**WK244g-2U**	PL5WGN-23	*Page C3-13*
Top roller lever plunger cast-metal clad	1NO+1NC						
Normal stroke		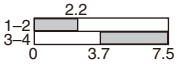	**HK244gR-2**	PL5HGR-22	**WK244gR-2**	PL5WGR-22	*Page C3-14*
Make-before-break		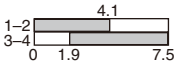	**HK244gR-2U**	PL5HGR-23	**WK244gR-2U**	PL5WGR-23	*Page C3-14*
Reversing top roller lever plunger cast-metal clad	1NO+1NC						
Normal stroke		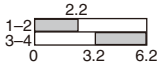	**HK244gRA-2**	PL5HGW-22	**WK244gRA-2**	PL5WGW-22	*Page C3-17*
Make-before-break		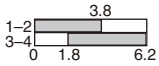	**HK244gRA-2U**	PL5HGW-23	**WK244gRA-2U**	PL5WGW-23	*Page C3-17*
Top push rod plunger cast-metal clad	2NO+2NC						
Normal stroke		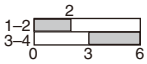	**HK244g-2/2**	PL5HGN-41	**WK244g-2/2**	PL5WGN-41	*Page C3-14*
Make-before-break	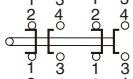	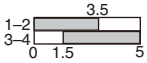	**HK244g-2U/2U**	PL5HGN-43	**WK244g-2U/2U**	PL5WGN-43	*Page C3-14*
Complex (Normal stroke + Make-before-break)	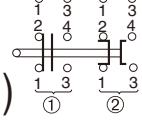	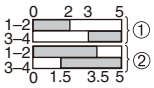	**HK244g-2/2U**	PL5HGN-46	**WK244g-2/2U**	PL5WGN-46	*Page C3-14*
Top roller lever plunger cast-metal clad	2NO+2NC						
Normal stroke	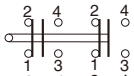	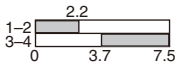	**HK244gR-2/2**	PL5HGR-41	**WK244gR-2/2**	PL5WGR-41	*Page C3-15*
Make-before-break		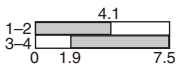	**HK244gR-2U/2U**	PL5HGR-43	**WK244gR-2U/2U**	PL5WGR-43	*Page C3-15*
Complex (Normal stroke + Make-before-break)	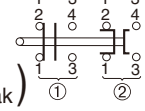	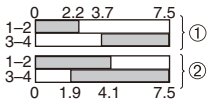	**HK244gR-2/2U**	PL5HGR-46	**WK244gR-2/2U**	PL5WGR-46	*Page C3-15*
Reversing top roller lever plunger cast-metal clad	2NO+2NC						
Normal stroke	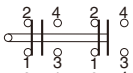	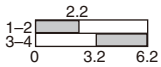	**HK244gRA-2/2**	PL5HGW-41	**WK244gRA-2/2**	PL5WGW-41	*Page C3-17*
Make-before-break		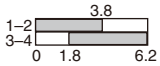	**HK244gRA-2U/2U**	PL5HGW-43	**WK244gRA-2U/2U**	PL5WGW-43	*Page C3-17*
Complex (Normal stroke + Make-before-break)	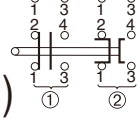	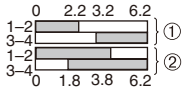	**HK244gRA-2/2U**	PL5HGW-46	**WK244gRA-2/2U**	PL5WGW-46	*Page C3-17*

□ Contact closed
□ Contact open

Proximity Switches
General information

KK02-298A

PE1-C, PE2-C

AF89-193

PE1-Y

KKD19-092, 094

PE-B

KKD17-112

PE-U

KKD19-096

PE-T

KKD19-088

PE-X3D

Proximity switches, PE series

■ Description

These proximity switches have many advantages over conventional limit switches, enabling their use where other switches will not do. FUJI offers two types – inductive and magnetic. Sensors and switching components are completely enclosed for protection against oil mist, metal fillng, dust, and moisture.
Inductive types use a solid-state switching device; magnetic types use a reed switch.

PE series proximity switches
Inductive type

Inductive proximity switches are available in AC or DC versions.
The PE-U series is slot type.
The PE1-C and PE1-Y series are cylindrical. The detecting surface of PE-B series is square. The PE-T series switches are slim types. The PE1B2P is compact square type. The PE-L series has analog outputs with the sensor and amplifier separated. The PE2-C series is cylindrical and with stable operating indicator. The PE-X3D is flat type, and PE-4BS2 series is multiple type.
The PE-G4D is space-saving square type.

■ Features

PE-U series *(See page C3-23)*
- Operating distance: 7mm and 10mm
- Operating voltage range: 10 to 30V DC
- Suitable for detecting of ferromagnetic materials

PE1-C and PE1-Y series *(See page C3-24)*
- Short length achieved with IC
- 6 shielded and 4 non-shielded types
- AC 2-wire, DC 2-wire, and DC 3-wire systems
- Stable operating indicator provided as standard (mounting diameter M12 or more, and NO contact type).

PE-B series *(See page C3-28)*
- 4mm to 50mm operating distance
- Types with operating distance exceeding 20mm conform to the CENELEC Standard.
- Operating voltage range: 80 to 250V AC or 10 to 30V DC

PE-X15D series *(See page C3-31)*
- Square-flat type
- DC supply/3-wire, 12/24V DC
- Operating distance: 15mm

PE-T series *(See page C3-32)*
- Unique “Magnetic Shield Method” permits side-by-side mounting
- Only 12mm thick – achieved with IC
- Built-in reverse polarity and surge voltage protection

PE2-C series *(See page C3-34)*
- 4 shielded and 3 non-shielded types
- Stable operating level indicating lamp facilitates adjustment
- DC 2-wire, DC 3-wire and AC/DC 2-wire operating systems
- 40 to 250V AC/20 to 250V DC (AC/DC 2-wire system)

PE-X3D series *(See page C3-38)*
- Only 7mm thick
- Operating voltage range: 10 to 30V DC

PE-G4D *(See page C3-39)*
- Requires about half the mounting space of PE-B4 type.

PE2-LA10D *(See page C3-40)*
- DC free power supply compatible (12 to 24 V DC)
- In addition to the voltage output type, a current output type not susceptible to transmission line resistance is also available.

X-806
PM-4M

PM1U-25A_L
PM-1U

FA-1446
AES202B-1A

X806
PM-2S

KKD19-098
AER201L-1A

FA-1446
AEQ010-1A

AES, AER and PM type proximity switches (Magnetically-operated reed switches)
In the standard type PM the reed switch element and the sensing magnet are separate elements. The AES type is also a separate type but is a miniaturized version. In the AER type the sensing magnet element and the reed switch are integrated in one housing.

■ Features

- Since these proximity switches make use of a permanent magnet no external power source is required to operate the reed switch.
- The dry reed contact switch is dependable in operation and has an extended service life.
- The unit strongly resists vibration and is both water-and dust-tight (except for AES type).
- Either an AC or DC power source can be used for the reed switch output.
- Compact in design and easy to install anywhere.
- Can be mounted on a steel frame (In this case the effective operating distance is reduced by one-half).

■ For further information

See pages C3-42 to 45.

Inductive type

■ Description

● Standard metal plate (object)
Standard metal plate (object) is a standard sensing target to measure the basic performance. Its shape, size, and material are stipulated. Iron is usually used as material.

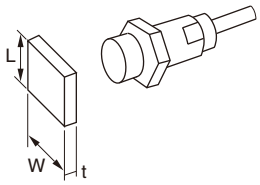

● Operating distance
The operating distance is the distance along the center axis of the head from the sensing head to the point where a metal plate traveling along the path actuates the switch.
Normally the operating distance means this distance in vertical direction.

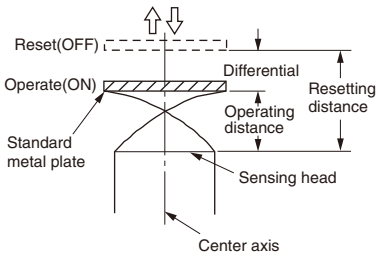

The following curves indicate typical operating distances. Values for aluminum or copper will be less than 1/2 those indicated for iron. In order for an object to be detected, its dimensions must be no smaller than 30 × 30mm, or no larger than 70 × 70mm. Objects smaller or larger will not be detected, regardless of material.

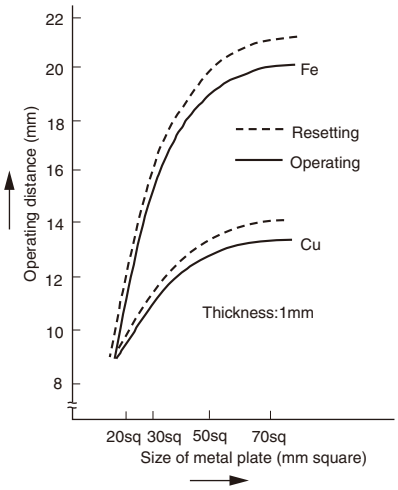

● Differential distance
This is the distance between the actuating point where the switch is actuated and the reset point where the switch resets after the metal plate is withdrawn from the sensing head.

● Response curve
This curve shows the detect-to-reset range with object distance from the head. The switch operates when the object approaching form the left reaches point P on curve 'a', and resets when the trailing edge of the object reaches point Q on curve 'b'.
The switch also resets when the object is withdrawn from point P to R on curve 'd'.

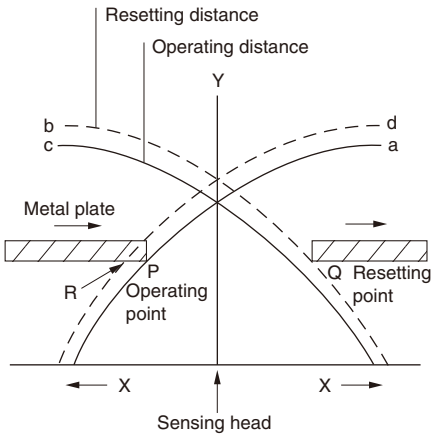

Proximity Switches
General information

Magnetically operated type

■ Operating
These switches comprise a sensor and a reed switch element, which closes when a magnetic object approaches.

■ Reed switch
The constructions of the reed switch and its magnetic element are shown in the diagram. The reed switch is made up of two magnetic reeds in an airtight glass tube. The 2 reeds are magnetized when they come within the magnetic field of the magnetic element. In this case the tips of these 2 reeds have positive and negative charges respectively and are attracted to each other. When the magnetic field is removed the magnetic charge is lost and the reed switch opens.
FUJI's reed switches are designed to operate in the same manner as the snap-action of conventional limit switches.

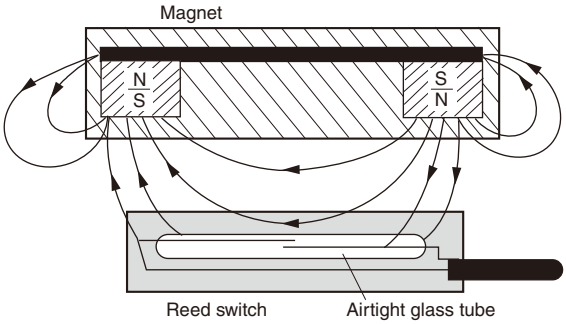

■ Mode of operation
The operation methods of the magnetic type proximity switches are as illustrated.

Separation type

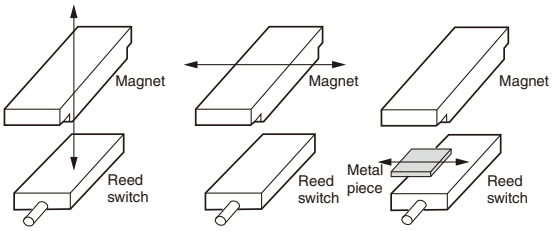

Reed switch is fixed but magnet moves in a vertical direction.

Reed switch is fixed but magnet moves in a horizontal direction.

Both the reed switch and magnet are fixed. And metal object passes between these two.

Integrated type

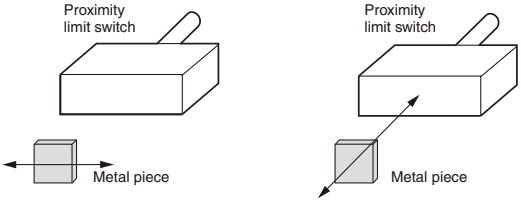

Proximity switch is fixed and the metal object moves in a horizontal direction.

Proximity switch is fixed and the metal piece moves forwards and backwards.

■ Operating characteristics
Short axis
Magnet: Travel
Reed switch: Fixed
The reed switch closes when 'm' the magnet center reaches '●' position. It resets at 'x' position.

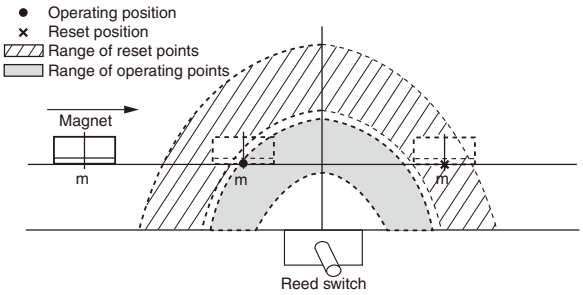

Long axis
Magnet: Travel
Reed switch: Fixed
This method is feasible but if the distance between the magnet and the reed switch is not correct the reed switch may switch 3 times when the magnet carries out only 1 travel.
Try to avoid using this arrangement.

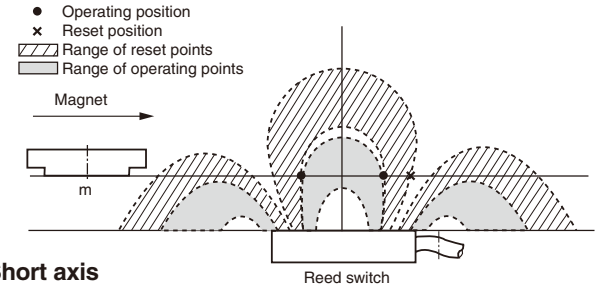

Short axis
Magnet: Fixed
Reed switch: Fixed
(In this case the reed switch operates as an NC contact.)
Reed switch closes when the metal piece is out of 'X' region between the magnet and the reed switch.
When the metal piece passes through the 'X' region the reed switch will open. Thus the reed switch opens as soon as 'c' the tip of the metal piece reaches 'X' region and closes as soon as 'd' the end leaves 'Y' region.

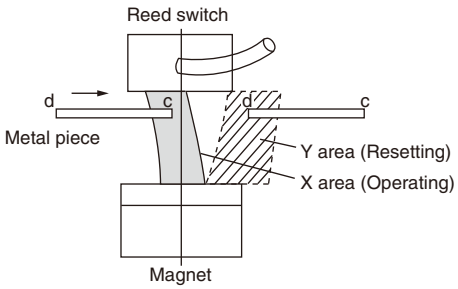

Proximity Switches PE-U12D, PE-U25NT

Inductive proximity switches–Slot type, PE-U

Supply voltage: 12/24V DC
Output: Transistor 50, 100mA max.
Operating distance: 7, 10mm

■ Features

- The slot type detecting surfaces of 12 and 25mm are available.
  Stable detection characteristics can be obtained when a metal plate passes through the slot ON or OFF-center.
- Best suited for detection of magnetic metal plates passing through the slot.
- Provided with built-in reverse polarity and surge voltage protection circuits.
- LED indicator lamps are provided, thus facilitating operational checks.
- Degree of protection meets the requirement of IP67 (IEC), thus permitting operation in unfavorable environments.
- NPN transistor voltage/current outputs are provided, thus permitting a wide range of applications.

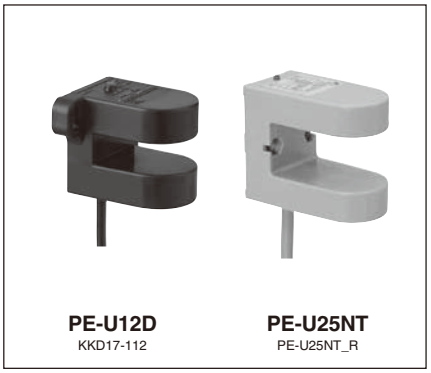

PE-U12D KKD17-112 **PE-U25NT** PE-U25NT_R

■ Specifications

Type (Ordering code)	**PE-U25NT** (PE1U25-ND)	**PE-U12D** (PE1U12-D)
Operating distance	10mm ± 2*	7mm ± 1*
Standard target size (iron)	50 × 50 × 2.3mm	40 × 40 × 1mm
Supply voltage	12/24V DC	
Operating voltage range	10 to 30V DC	
Power consumption	Max. 20mA at 24V DC	Max. 15mA at 24V DC
Output capacity	Max. 100mA	Max. 50mA
Response time or frequency	Max. 3ms. (ON time)	Min. 50Hz
Differential	0.3 to 2mm	Max. 15% of operating distance
Ambient temperature	–25 to +70°C	
Degree of protection	IP67 (IEC)	
Insulation resistance	Over 50MΩ at 500V DC	
Dielectric strength	2000V AC rms. 1minute	1000V AC rms. 1minute
Mass	210g	120g

Note: * This indicates the distance "a" shown in figure at right.

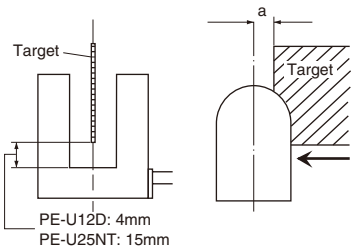

■ Response curve

PE-U12D

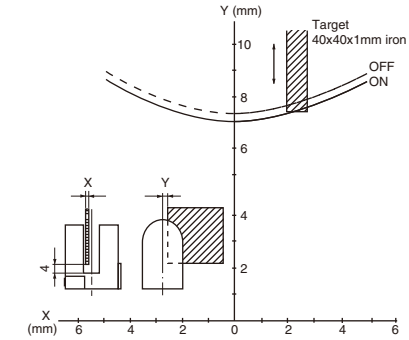

PE-U25NT

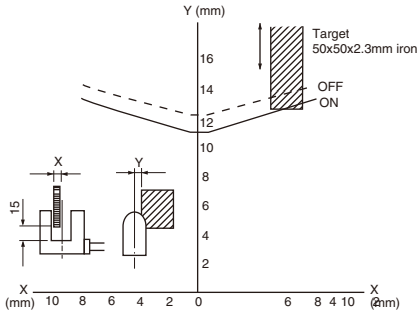

■ Wiring diagrams

PE-U12D

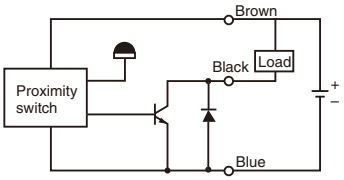

NPN transistor current output, 1NO

PE-U25NT

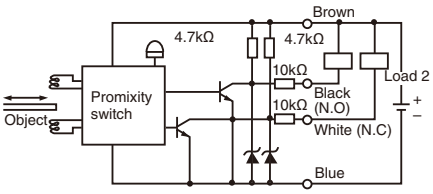

NPN transistor voltage/current output, SPDT

■ Dimensions, mm

PE-U12D

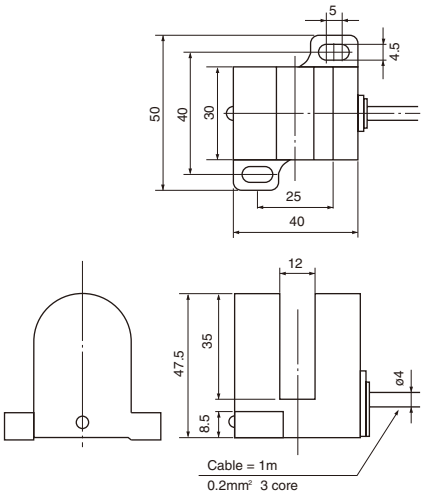

PE-U25NT

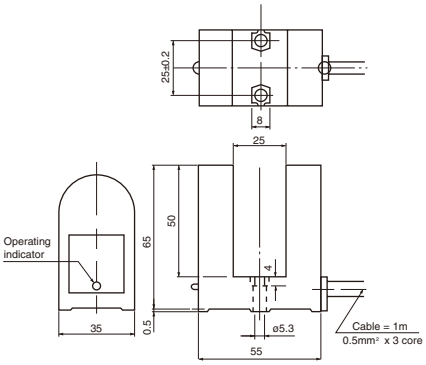

■ Ordering information

Specify the following:
1. Type number or ordering code

Proximity Switches
PE1-C, PE1-Y

Inductive proximity switches–Cylindrical type, PE1-C, PE1-Y

Operating system
DC supply/3-wire and 2-wire system
AC supply/2-wire system
Operating distance: 0.8 to 20mm
This proximity switch has a cylindrical shape. The sensor is fitted to an end of the cylinder and the body is provided with a built-in control circuit.
This type conforms to the requirements of the CENELEC (Europe) Standards and as the dimensions, ratings and performance comply with the requirements of these Standards, this type can be used as replacement units.

■ Features

- Short length because of the use of IC circuit.
- Shielded and non-shielded type are available.
- Red and green LED is provided for a stable operating indication and easy setting, mounting diameter M12 or more and NO contact type only.
- Provided with reverse polarity and surge voltage protection circuits.
- Degree of protection: IEC IP67

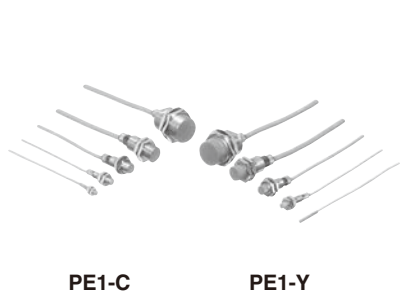

■ Type number nomenclature

PE 1-C S 10 D B

Basic type

Series
C: Cylindrical, screwed
Y: Cylindrical, straight

Shield
Blank: Non-shielded
S: Shielded

Operating distance
0.8 : 0.8mm 2 : 2mm 10 : 10mm
1 : 1mm 5 : 5mm

Contact
Blank: 1NO
B: 1NC

Operating system
D: DC, 3-wire, NPN
Q: DC, 3-wire, PNP
S: DC, 2-wire
A: AC, 2-wire

■ Ordering code

PE1 S 10-D B

Basic type

Series
Y: Cylindrical, straight
C: Cylindrical, non-shielded
S: Cylindrical, shielded

Operating distance
P8: 0.8mm 05: 5.0mm
1P: 1.5mm 10: 10.0mm
02: 2.0mm 20: 20.0mm

Contact
Blank: 1NO
B: 1NC

Operating system
D: DC, 3-wire, NPN
Q: DC, 3-wire, PNP
S: DC, 2-wire
A: AC, 2-wire

■ Specifications

Description	Operating system	Operating distance (mm)	Mounting diameter	Supply voltage (Operating voltage range)	1NO Type	Ordering code	1NC Type	Ordering code
Shielded 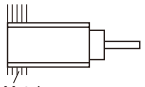 Metal	DC supply 3-wire, NPN transistor output	0.8 0.8 1.5 2 5 10	4mm-dia. M5 M8 M12 M18 M30	12/24V DC (10 to 30V DC)	**PE1-YS08D** **PE1-CS08D** **PE1-CS1R5D** **PE1-CS2D** **PE1-CS5D** **PE1-CS10D**	PE1YP8-D PE1SP8-D PE1S1P-D PE1S02-D PE1S05-D PE1S10-D	**PE1-YS08DB** **PE1-CS08DB** **PE1-CS1R5DB** **PE1-CS2DB** **PE1-CS5DB** **PE1-CS10DB**	PE1YP8-DB PE1SP8-DB PE1S1P-DB PE1S02-DB PE1S05-DB PE1S10-DB
	DC supply 3-wire, PNP transistor output	0.8 0.8 1.5 2 5 10	4mm-dia. M5 M8 M12 M18 M30	12/24V DC (10 to 30V DC)	**PE1-YS08Q** **PE1-CS08Q** **PE1-CS1R5Q** **PE1-CS2Q** **PE1-CS5Q** **PE1-CS10Q**	PE1YP8-Q PE1SP8-Q PE1S1P-Q PE1S02-Q PE1S05-Q PE1S10-Q	**PE1-YS08QB** **PE1-CS08QB** **PE1-CS1R5QB** **PE1-CS2QB** **PE1-CS5QB** **PE1-CS10QB**	PE1YP8-QB PE1SP8-QB PE1S1P-QB PE1S02-QB PE1S05-QB PE1S10-QB
	DC supply 2-wire	2 5 10	M12 M18 M30	12/24V DC (10 to 30V DC)	**PE1-CS2S** **PE1-CS5S** **PE1-CS10S**	PE1S02-S PE1S05-S PE1S10-S	**PE1-CS2SB** **PE1-CS5SB** **PE1-CS10SB**	PE1S02-SB PE1S05-SB PE1S10-SB
	AC supply 2-wire	2 5 10	M12 M18 M30	120/240V AC (45 to 260V AC)	**PE1-CS2A** **PE1-CS5A** **PE1-CS10A**	PE1S02-A PE1S05-A PE1S10-A	**PE1-CS2AB** **PE1-CS5AB** **PE1-CS10AB**	PE1S02-AB PE1S05-AB PE1S10-AB
Non-shielded 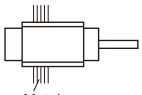 Metal	DC supply 3-wire, NPN transistor output	2 5 10 20	M8 M12 M18 M30	12/24V DC (10 to 30V DC)	**PE1-C2D** **PE1-C5D** **PE1-C10D** **PE1-C20D**	PE1C02-D PE1C05-D PE1C10-D PE1C20-D	**PE1-C2DB** **PE1-C5DB** **PE1-C10DB** **PE1-C20DB**	PE1C02-DB PE1C05-DB PE1C10-DB PE1C20-DB
	DC supply 3-wire, PNP transistor output	2 5 10 20	M8 M12 M18 M30		**PE1-C2Q** **PE1-C5Q** **PE1-C10Q** **PE1-C20Q**	PE1C02-Q PE1C05-Q PE1C10-Q PE1C20-Q	**PE1-C2QB** **PE1-C5QB** **PE1-C10QB** **PE1-C20QB**	PE1C02-QB PE1C05-QB PE1C10-QB PE1C20-QB
	DC supply 2-wire	5 10 20	M12 M18 M30	12/24V DC (10 to 30V DC)	**PE1-C5S** **PE1-C10S** **PE1-C20S**	PE1C05-S PE1C10-S PE1C20-S	**PE1-C5SB** **PE1-C10SB** **PE1-C20SB**	PE1C05-SB PE1C10-SB PE1C20-SB
	AC supply 2-wire	5 10 20	M12 M18 M30	120/240V AC (45 to 260V AC)	**PE1-C5A** **PE1-C10A** **PE1-C20A**	PE1C05-A PE1C10-A PE1C20-A	**PE1-C5AB** **PE1-C10AB** **PE1-C20AB**	PE1C05-AB PE1C10-AB PE1C20-AB

■ Specifications

Type	PE1-YS08D, DB PE1-CS08D, DB	PE1-YS08Q, QB PE1-CS08Q, QB	PE1-CS□D, DB PE1-C□D, DB	PE-CS□Q, QB PE1-C□Q, QB	PE1-CS□S, SB PE1-C□S, SB	PE1-CS□A, AB PE1-C□A, AB
Output	NPN transistor, open collector output	PNP transistor, open collector output	NPN transistor, open collector output	PNP transistor, open collector output	Transistor output	Thyristor output
Current consumption	10mA or less at 24V DC		15mA or less at 24V DC		–	–
Leakage current	–		–		0.8mA or less at 24V DC	1.5mA or less at 200V AC
Ambient temperature	–25 to 70°C		–25 to 80°C		–25 to 80°C	–25 to 80°C
Dielectric strength	250V AC 1 min.		1000V AC 1min.		1000V AC 1 min.	2000V AC 1 min.
Insulation resistance	50MΩ or more at 250V DC megger		50MΩ or more at 500V DC megger			
Degree of protection	IP67 (IEC Standard)					
Vibration	10-55Hz, 1.5mm double amplitude (in X, Y, Z directions, respectively for 2 hours)					
Shock	500m/s²		–			
Protection circuit	Reverse polarity and surge voltage		Reverse polarity, short-circuit and surge voltage			Surge voltage

■ Response frequency

Type	Frequency (Hz)
PE1-CS1R5D, 5DB, 5Q, 5QB	2000
PE1-CS2D, 2DB, 2Q, 2QB	1500
PE1-YS08D, 08DB, 08Q, 08QB PE1-CS08D, 08DB, 08Q, 08QB PE1-CS2S, 2SB	1000
PE1-C2D, 2DB, 2Q, 2QB PE1-C5S, 5SB	800
PE1-CS5D, 5DB, 5Q, 5QB	600
PE1-CS5S, 5SB	500
PE1-CS10D, 10DB, 10Q, 10QB, 10S, 10SB PE1-C5D, 5DB, 5Q, 5QB, 10S, 10SB	400
PE1-C10D, 10DB, 10Q, 10QB	200
PE1-C20D, 20DB, 20Q, 20QB	100
PE1-CS2A, 2AB, 5A, 5AB, 10A, 10AB PE1-C5A, 5AB, 10A, 10AB, 20A, 20AB	25

■ Output capacity

Type	Output
PE1-YS08D, 08DB, 08Q, 08QB PE1-CS08D, 08DB, 08Q, 08QB	Current output*1 100mA max.
PE1-CS1R5D, 5DB, 5Q, 5QB PE1-CS2D, 2DB, 2Q, 2QB PE1-CS5D, 5DB, 5Q, 5QB PE1-CS10D, 10DB, 10Q, 10QB PE1-C2D, 2DB, 2Q, 2QB PE1-C5D, 5DB, 5Q, 5QB PE1-C10D, 10DB, 10Q, 10QB PE1-C20D, 20DB, 20Q, 20QB	Current output*1 200mA max.
PE1-CS2S, 2SB, 5S, 5SB, 10S, 10SB PE1-C5S, 5SB, 10S, 10SB, 20S, 20SB	Current output 3 to 200mA
PE1-CS2A, 2AB, 5A, 5AB, 10A, 10AB PE1-C5A, 5AB, 10A, 10AB, 20A, 20AB	Current output*2 5 to 200mA

*1 Transistor, open collector output
*2 Refer to output capacity derating curve, *see page C3-26*

■ Accessories (optional)

● Mounting brackets

Type	Ordering code	Dimensions, mm				Screw (supplied)	Used with
		A	B	C	D		
PX1-P4	PE1Z0036	13	7.5	6	20	M3 × 10	PE1-YS08
PX1-P8	PE1Z0037	18	10	18	28	M4 × 20	PE1-CS1R5 PE1-C2
PX1-P12	PE1Z0033	24	12.5	20	37	M4 × 25	PE1-CS2 PE1-C5
PX1-P18	PE1Z0034	32	17	30	47	M5 × 32	PE1-CS5 PE1-C10
PX1-P30	PE1Z0035	45	17	50	60	M5 × 50	PE1-CS10 PE1-C20

● Surface protection covers

Type	Ordering code	Dimensions, mm			Used with
		A	B	C	
PX1-C12S	PE1Z0030	ø15	5	0.6	PE1-CS2
PX1-C18S	PE1Z0031	ø22.5	8	1.1	PE1-CS5
PX1-C30S	PE1Z0032	ø35	12	1.6	PE1-CS10

KK02-301A

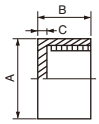

PX1-P4

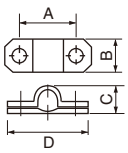

PX1-P8 to P30

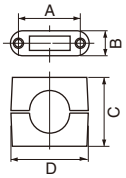

Proximity Switches
PE1-C, PE1-Y

■ Response curve for iron (Typical)

PE1-YS08
PE1-CS08

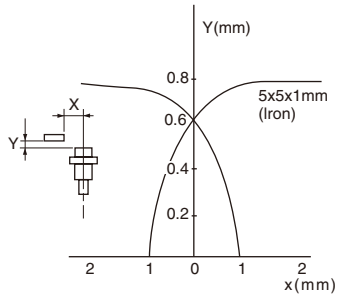

PE1-CS5□
PE1-C10□

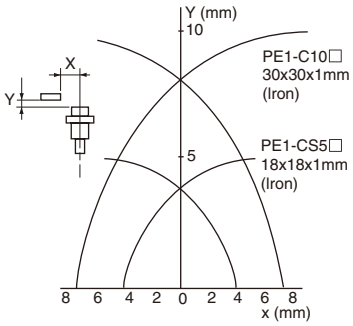

PE1-CS1R5
PE1-C2□

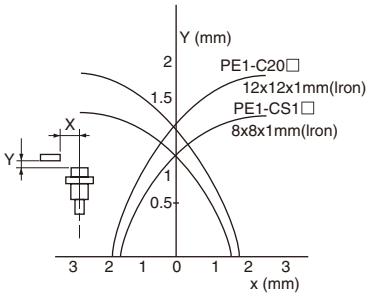

PE1-CS10□
PE1-C20□

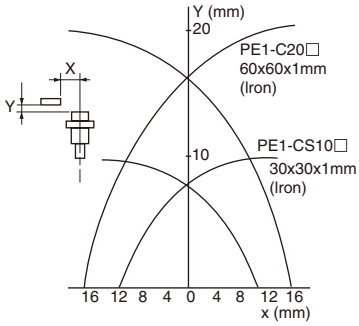

PE1-CS2□
PE1-C5□

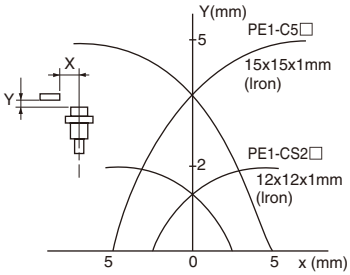

Output capacity derating
PE1-C□A

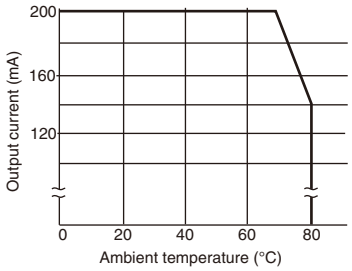

■ Wiring diagrams

● DC supply/3-wire system, NPN transistor output

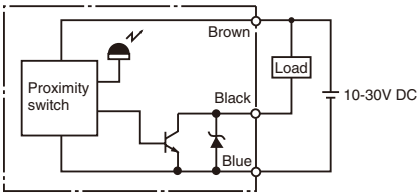

● DC supply/2-wire system
PE1-C□S (1NO, 1NC)

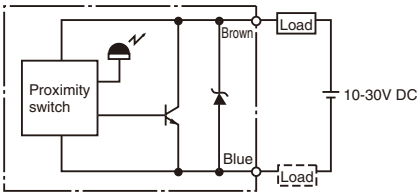

● DC supply/3-wire system, PNP transistor output

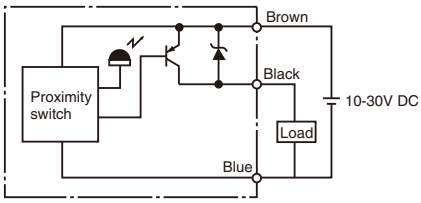

● AC supply/2-wire system
PE1-C□A (1NO, 1NC)

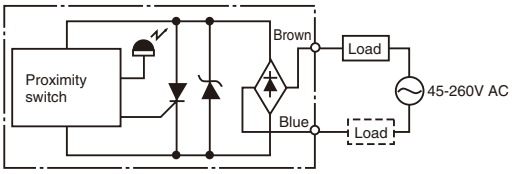

■ Mutual interference

Be sure to space two switches at a distance greater than that shown in the table at right to prevent mutual interference.

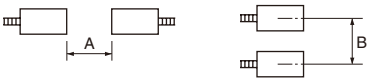

Type	A (mm)	B (mm)
PE1-YS08□	10	5
PE1-CS08□	10	5
PE1-CS1R5□	20	15
PE1-CS2□	30 (15)	20 (12)
PE1-CS5□	50 (25)	30 (18)
PE1-CS10□	100 (50)	70 (35)
PE1-C2□	30	30
PE1-C5□	80 (40)	80 (40)
PE1-C10□	200 (100)	120 (60)
PE1-C20□	300 (150)	200 (100)

Note: The values in parentheses are applicable when using two switches with oscillation frequencies different from each other.

■ Dimensions, mm

● Shielded

PE1-YS08□

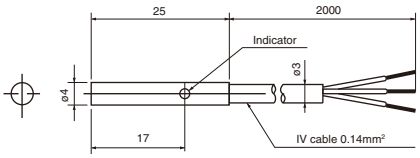

Mass: 30g

PE1-CS08□

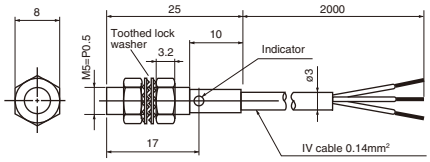

Mass: 30g

PE1-CS1R5□

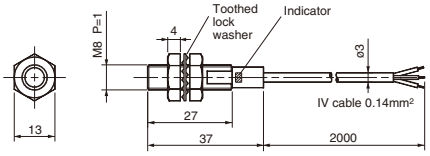

Mass: 40g

PE1-CS2□

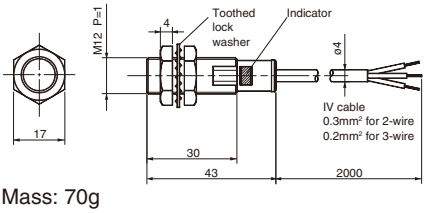

Mass: 70g

PE1-CS2A

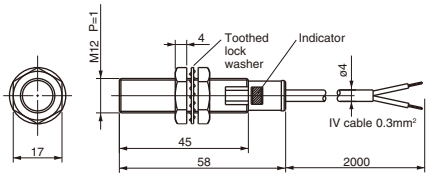

Mass: 100g

PE1-CS5□

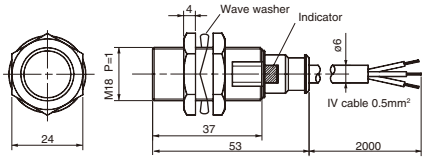

Mass: 160g

PE1-CS5A

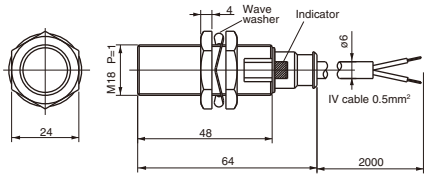

Mass: 170g

PE1-CS10□

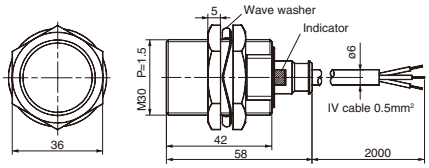

Mass: 280g

PE1-CS10A

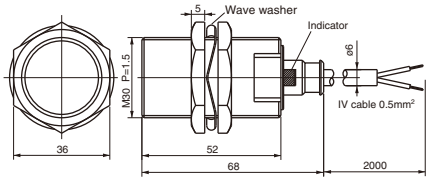

Mass: 340g

● Non-shielded

PE1-C2□

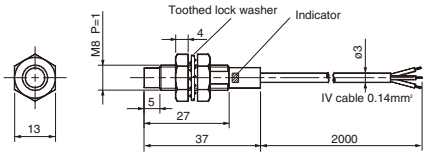

Mass: 40g

PE1-C5□

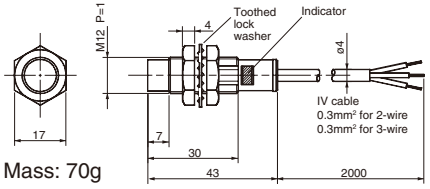

Mass: 70g

PE1-C5A

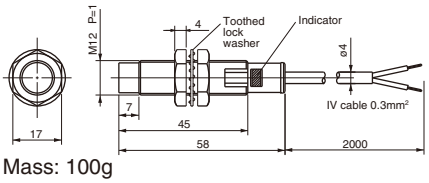

Mass: 100g

PE1-C10□

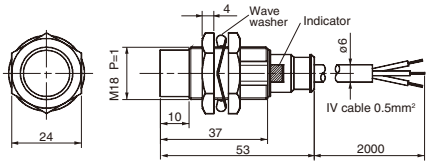

Mass: 160g

PE1-C10A

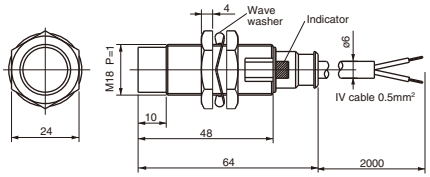

Mass: 170g

PE1-C20□

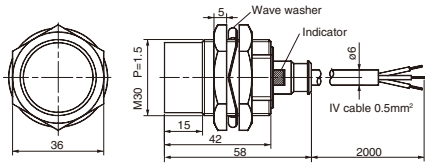

Mass: 280g

PE1-C20A

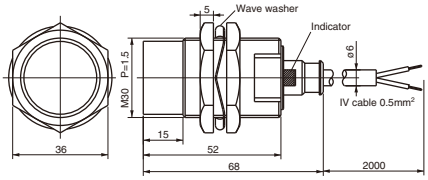

Mass: 340g

Proximity Switches
PE-B

Inductive proximity switches–Square type, PE-B
Supply voltage:
10-30V DC
80-250V AC, 50/60Hz
Operating distance: 4 to 50mm

■ Features
- Operating distance from 4mm to 50mm permits a variety of applications.
- LED's for operating indication lamp are provided for all types thus facilitating operation checks.
- Ones with an operating distance of over 20mm meet the requirements of the CENELEC Standards.
- Wide operating voltage range
  Operating range of supply voltage is from 80 to 250V AC or from 10 to 30V DC.
- Provided with built-in reverse polarity and surge voltage protection circuits.
- PNP output types are also available thus permitting application to machine tools in Europe.

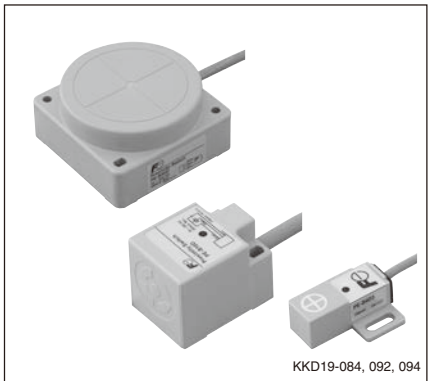
KKD19-084, 092, 094
PE-B

■ Type number nomenclature

PE – B 4 D 3 B

Basic type

Series
B: Square shaped

Operating distance
4: 4mm 20: 20mm
7: 7mm 30: 30mm
10:10mm 50: 50mm
15:15mm

Operating system
D: DC, 3-wire, NPN output
Q: DC, 3-wire, PNP output
A: AC, 2-wire
S: DC, 2-wire

Sensing head direction
Blank: Standard
3: Upper side (PE–B4 only)

Contact
Blank: 1NO
B: 1NC

■ Ordering code

PE1 B 10 – D B 3

Basic type

Series
B: Square shaped

Operating distance
04: 4mm 20: 20mm
07: 7mm 30: 30mm
10: 10mm 50: 50mm
15: 15mm

Operating system
D: DC, 3-wire, NPN output
Q: DC, 3-wire, PNP output
A: AC, 2-wire
S: DC, 3-wire

Contact
Blank: 1NO
B: 1NC

Sensing head direction
Blank: Standard
3: Upper side (PE-B4 only)

■ Versions

Operating system	Target size (mm)	Operating distance (mm)	Output * 1NO Type	Ordering code	1NC Type	Ordering code	Output * 1NO Type	Ordering code	1NC Type	Ordering code
DC supply 3-wire	20 × 20 × 1	4	**PE-B4D**	PE1B04-D	**PE-B4DB**	PE1B04-DB	**PE-B4Q**	PE1B04-Q	**PE-B4QB**	PE1B04-QB
	20 × 20 × 1	4	**PE-B4D3**	PE1B04-D3	**PE-B4D3B**	PE1B04-DB3	**PE-B4Q3**	PE1B04-Q3	**PE-B4Q3B**	PE1B04-QB3
	30 × 30 × 1	7	**PE-B7D**	PE1B07-D	**PE-B7DB**	PE1B07-DB	**PE-B7Q**	PE1B07-Q	**PE-B7QB**	PE1B07-QB
	40 × 40 × 1	10	**PE-B10D**	PE1B10-D	**PE-B10DB**	PE1B10-DB	**PE-B10Q**	PE1B10-Q	**PE-B10QB**	PE1B10-QB
	50 × 50 × 1	15	**PE-B15D**	PE1B15-D	**PE-B15DB**	PE1B15-DB	–	–	–	–
	50 × 50 × 1	20	**PE-B20D**	PE1B20-D	**PE-B20DB**	PE1B20-DB	**PE-B20Q**	PE1B20-Q	**PE-B20QB**	PE1B20-QB
	90 × 90 × 1	30	**PE-B30D**	PE1B30-D	**PE-B30DB**	PE1B30-DB	**PE-B30Q**	PE1B30-Q	**PE-B30QB**	PE1B30-QB
	150 × 150 × 1	50	**PE-B50D**	PE1B50-D	**PE-B50DB**	PE1B50-DB	**PE-B50Q**	PE1B50-Q	**PE-B50QB**	PE1B50-QB
AC supply 2-wire	30 × 30 × 1	7	**PE-B7A**	PE1B07-A	–	–	–	–	–	–
	40 × 40 × 1	10	**PE-B10A**	PE1B10-A	–	–	–	–	–	–
	50 × 50 × 1	20	**PE-B20A**	PE1B20-A	–	–	–	–	–	–
	90 × 90 × 1	30	**PE-B30A**	PE1B30-A	**PE-B30AB**	PE1B30-AB	–	–	–	–
	150 × 150 × 1	50	**PE-B50A**	PE1B50-A	**PE-B50AB**	PE1B50-AB	–	–	–	–
DC supply 2-wire	20 × 20 × 1	4	**PE-B4S**	PE1B04-S	**PE-B4SB**	PE1B04-SB	–	–	–	–
	30 × 30 × 1	7	**PE-B7S**	PE1B07-S	**PE-B7SB**	PE1B07-SB	–	–	–	–
	40 × 40 × 1	10	**PE-B10S**	PE1B10-S	**PE-B10SB**	PE1B10-SB	–	–	–	–
	50 × 50 × 1	20	**PE-B20S**	PE1B20-S	**PE-B20SB**	PE1B20-SB	–	–	–	–
	90 × 90 × 1	30	**PE-B30S**	PE1B30-S	**PE-B30SB**	PE1B30-SB	–	–	–	–
	150 × 150 × 1	50	**PE-B50S**	PE1B50-S	**PE-B50SB**	PE1B50-SB	–	–	–	–

Notes: *PE-B□D: NPN transistor, open collector output
PE-B□Q: PNP transistor, open collector output
PE-B□A: Thyristor output
PE-B□S: Transistor output

■ Ordering information
Specify the following:
1. Type number or ordering code

■ Specifications

Type	PE-B□D, PE-B□DB	PE-B□Q, PE-B□QB	PE-B□S, PE-B□SB	PE-B□A, PE-B□AB
Output	NPN transistor, open collector output	PNP transistor, open collector output	Transistor, output	Thyristor, output
Supply voltage	12/24V DC *1		12/24V DC *1	120/240V AC *2
Output capacity	Max. 200mA at 12/24V DC (PE-B4D□, PE-B4Q□: Max. 50mA at 12/24V DC)		Max. 100mA	10 to 200mA
Current consumption	Max. 15mA at 24V DC		0.8mA or less (Leakage current)	2mA at 200V AC (Leakage current)
Ambient temperature	–25 to +75°C		–25 to +75°C	–25 to +75°C
Dielectric strength	2000V AC, 1 min.		2000V AC, 1 min.	2000V AC, 1 min.
Insulation resistance	Over 50MΩ (500V DC megger)			
Degree of protection	IP67 (IEC)			
Response frequency	See table below			
Vibration	10 to 55Hz, 1.5mm double amplitude (in X, Y and Z direction, respectively for two hours)			
Shock	500m/s²			
Circuit protection	Short-circuit (except PE-B□A and PE-B□AB), reverse polarity, surge voltage			

Notes: *1 Operational voltage range: 10 to 30V DC *2 Operational voltage range: 80 to 250V AC.

■ Response frequency

DC supply

PE-B7D, PE-B7Q, PE-B7S	300Hz
PE-B4D, PE-B4Q, PE-B4S	200Hz
RE-B10D, PE-B10Q, PE-B10S	
PE-B15D, PE-B20D, PE-B20Q, PE-B20S	100Hz
PE-B30D, PE-B30Q, PE-B30S	50Hz
PE-B50D, PE-B50Q, PE-B50S	10Hz

AC supply

PE-B7A, PE-B10A, PE-B20A	20Hz
PE-B30A, PE-B50A	5Hz

■ Response curve for iron (Typical)

PE-B4□
Material: Iron
20 × 20 × 1mm

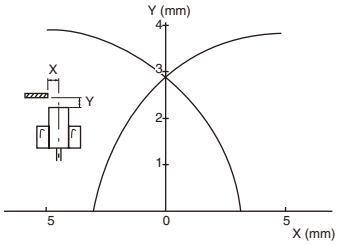

PE-B7□
Material: Iron
30 × 30 × 1mm

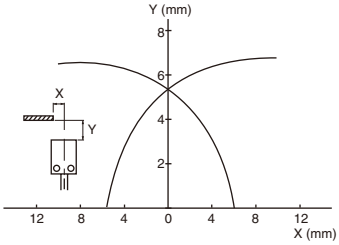

PE-B10□
Material: Iron
40 × 40 × 1mm

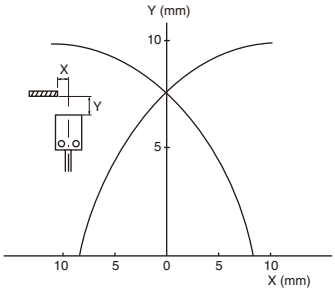

PE-B15□
Material: Iron
50 × 50 × 1mm

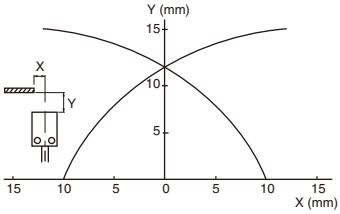

PE-B20□
Material: Iron
50 × 50 × 1mm

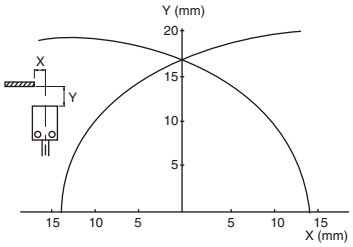

PE-B30□
Material: Iron
90 × 90 × 1mm

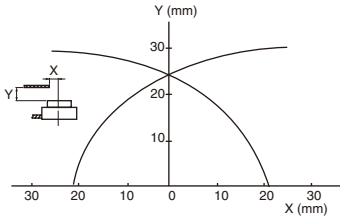

PE-B50□
Material: Iron
150 × 150 × 1mm

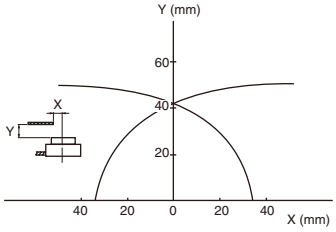

Proximity Switches
PE-B

■ Wiring diagrams

● DC supply/3-wire system

PE-B□D

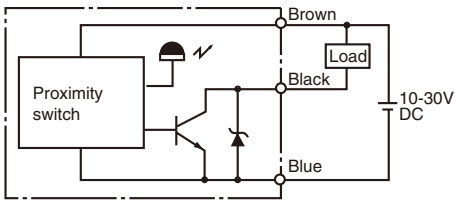

● DC supply/2-wire system

PE-B□S

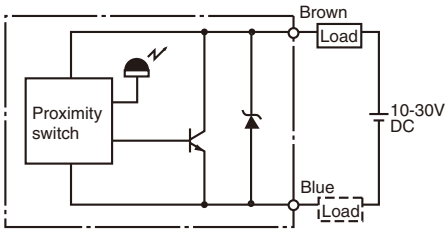

● AC supply/2-wire system

PE-B□A

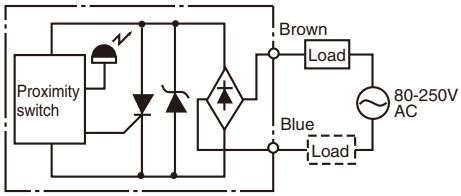

PE-B□Q

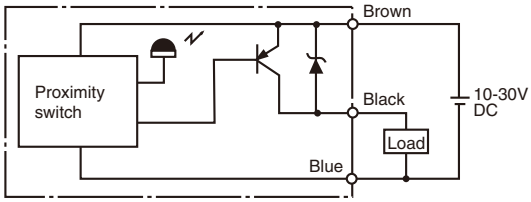

C3

■ Dimensions, mm

PE-B4□, B4□3 PE-B4□B, B4□3B

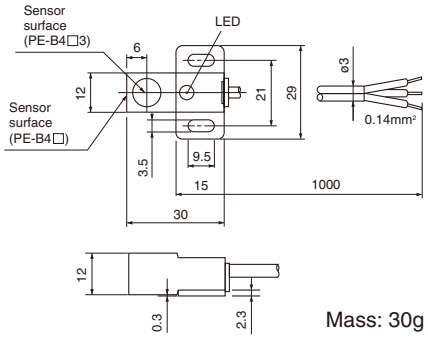

Mass: 30g

PE-B7□, PE-B7□B

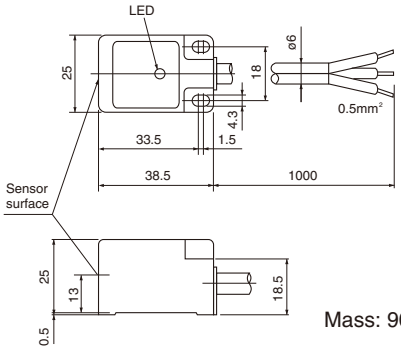

Mass: 90g

PE-B10□, PE-B10□B

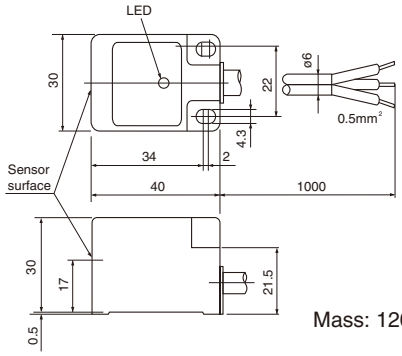

Mass: 120g

PE-B15D, PE-B15DB

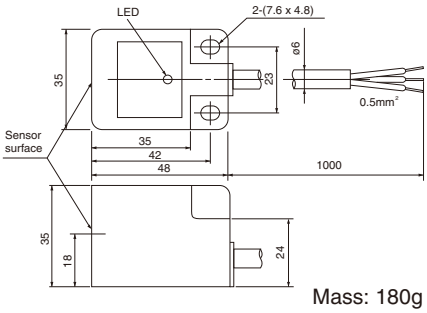

Mass: 180g

PE-B20□, PE-B20□B

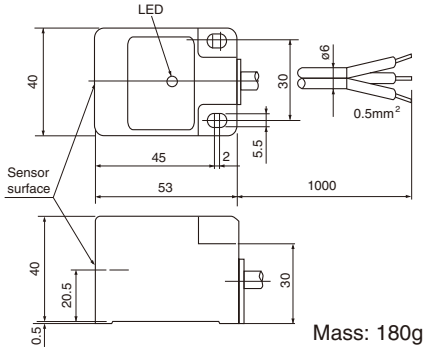

Mass: 180g

PE-B30□, PE-B30□B

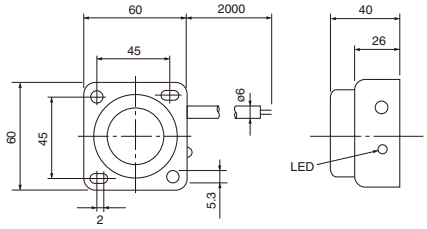

Mass: 330g

PE-B50□, PE-B50□B

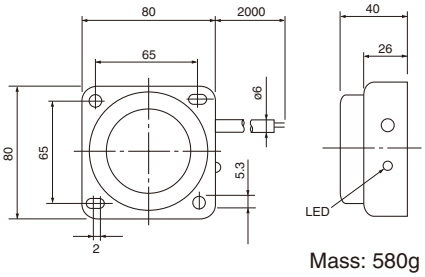

Mass: 580g

■ Mutual interference:

Be sure to space two switches at a distance greater than that shown in the table at right to prevent mutual interference.

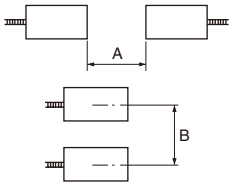

Type	A (mm)	B (mm)
PE-B4□	60 (30)	60 (30)
BE-B7□	80 (40)	80 (40)
PE-B10□	120 (60)	120 (60)
PE-B15□	200 (100)	120 (60)
PE-B20□	200 (100)	200 (100)
PE-B30□	300 (150)	300 (150)
PE-B50□	500 (250)	500 (250)

Note: The values in parentheses are applicable when using two switches with oscillation frequencies different from each other.

Inductive proximity switches– Square flat type, PE-X15D

Operating system:
DC supply/3-wire system
Supply voltage range: 10 to 30V DC
Operating distance: 15mm

■ Features

- Degree of protection meets the requirements of IEC IP66, thus permitting operations in unfavorable environment.
- Only two screws are needed to affix each switch, eliminating the need for exclusive mounting brackets.
- Incorporates surge suppression circuits and protection circuits against reverse polarity and short-circuits.

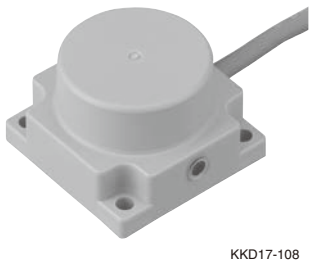

PE-X15D

■ Specifications

Type (Ordering code)	**PE-X15D**
Operating system	DC supply/3-wire
Output	NPN transistor, open collector, 1NO
Operating distance	15mm ±10%
Target size (iron)	50×50×1mm (iron)
Differential distance	Max. ±10% of operating distance
Rated voltage	12/24V DC (10 to 30V DC)
Switching capacity	200mA max.
Current consumption	15mA max. at 24V DC
Residual voltage	1.5V max. at 24V DC, 200mA
Response frequency	100Hz
Variation due to voltage fluctuation	Max. ±1% of operating distance at 12/24V DC when operated within 10 to 30V DC
Variation due to temperature fluctuation	Max. ±10% of operating distance at 20°C within temperature range of –25 to +70°C
Dielectric strength	1000V AC, 1min.
Insulation resistance	50MΩ or more (500V DC)
Degree of protection	IP66 (IEC)
Ambient temperature	–25 to +70°C (avoid icing)
Humidity	35 to 95% RH
Vibration	10–55Hz, 1.5mm double amplitude
Shock	500m/s² (approx. 50G)

■ Response curve for iron

Material: Iron
50×50×1mm

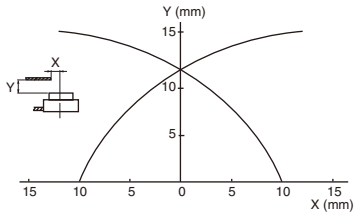

- Influence of surrounding metals:
  When mounting a proximity switch surrounded by metals, be sure to provide a minimum distance as shown below.

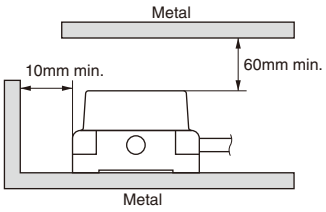

■ Wiring diagrams

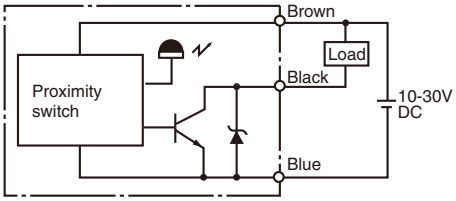

■ Dimensions, mm

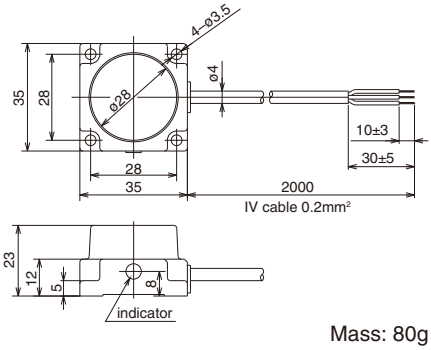

Mass: 80g

Proximity Switches
PE-T

Inductive proximity switches–Slim type, PE-T
Supply voltage: 12/24V DC
120/240V AC
Output capacity: Max. 200mA

■ Features
- Unusual "Magnetic Shield Method" permits to mount these units side by side, touching each other. (Shielded type PE-TS2)
- Only 12mm in thickness because of the use of IC.
- Wide operating voltage range
  Operating range of supply voltage is from 80 to 250V AC or from 10 to 30V DC.
- LED indicators are provided for all types thus facilitating operation checks.
- Provided with built-in reverse polarity and surge voltage protection circuits.
- Water and oil-tight
  Degree of protection meets the requirements of IEC IP67 thus permitting operations in unfavorable environment.

PE-T

■ Ordering information
Specify the following:
1. Type number or ordering code

■ Versions

Description	Operating system	Target size (mm)	Operating distance (mm)	Output 1NO Type	Ordering code	1NC Type	Ordering code
Shielded	DC supply/3-wire	12 × 12 × 1	2	**PE-TS2D** **PE-TS2Q**	PE1T02-D PE1T02-Q	**PE-TS2DB** **PE-TS2QB**	PE1T02-DB PE1T02-QB
	DC supply/2-wire	12 × 12 × 1	2	**PE-TS2S**	PE1T02-S	**PE-TS2SB**	PE1T02-SB
	AC supply/2-wire	12 × 12 × 1	2	**PE-TS2A**	PE1T02-A	—	—
Non-shielded	DC supply/3-wire	20 × 20 × 1	4	**PE-T4D** **PE-T4Q**	PE1N04-D PE1N04-Q	**PE-T4DB** **PE-T4QB**	PE1N04-DB PE1N04-QB
	DC supply/2-wire	20 × 20 × 1	4	**PE-T4S**	PE1N04-S	**PE-T4SB**	PE1N04-SB
	AC supply/2-wire	20 × 20 × 1	4	**PE-T4A**	PE1N04-A	—	—

■ Specifications

Type	**PE-TS2D, PE-T4D**	**PE-TS2Q, PE-T4Q**	**PE-TS2S, PE-T4S**	**PE-TS2A, PE-T4A**
Output	NPN transistor, open collector output	PNP transistor, open collector output	Transistor output	Thyristor output
Supply voltage	12/24V DC*1			120/240V AC*2
Output capacity	Max. 200mA			10 to 200mA
Current consumption	Max. 15mA at 24V DC		Max. 0.8mA (Leakage current)	Max. 2mA at 200V AC (Leakage current)
Ambient temperature	–25 to +70°C	–25 to +70°C	–25 to +70°C	–25 to +70°C
Dielectric strength	2000V AC, 1 min.	2000V AC 1 min.	2000V AC, 1 min.	2000V AC 1 min.
Insulation resistance	Over 50MΩ (500V DC)	Over 50MΩ at 500V DC	Over 50MΩ (at 500V DC)	Over 50MΩ (at 500V DC)
Degree of protection	IP67 (IEC)	IP67 (IEC)	IP67 (IEC)	IP67 (IEC)
Response frequency	See table below			

Notes: *1 Operating voltage range: 10 to 30V DC *2 Operating voltage range: 80 to 250V AC.

■ Response curve for iron
PE-TS2□

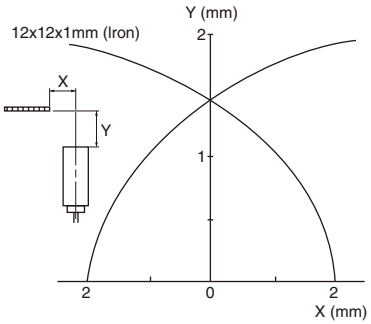

PE-T4□

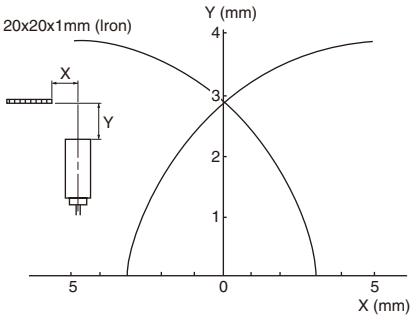

■ Response frequency
DC supply types

PE-TS2D, PE-TS2Q PE-TS2S	800Hz
PE-T4D, PE-T4Q PE-T4S	250Hz

AC supply types

PE-TS2A, PE-T4A	20Hz

■ Type number nomenclature

PE – TS 2 – D B

- **Contact**
  Blank: 1NO
  B: 1NC
- **Operating system**
  D: DC, 3-wire, NPN output
  Q: DC, 3-wire, PNP output
  S: DC, 2-wire
  A: AC, 2-wire
- **Operating distance**
  2: 2mm
  4: 4mm
- **Series**
  TS: Shielded, slim type
  N: Non-shielded, slim type
- **Basic type**

■ Ordering code

PE1 T 02 – D B

- **Contact**
  Blank: 1NO
  B: 1NC
- **Operating system**
  D: DC, 3-wire, NPN output
  Q: DC, 3-wire, PNP output
  S: DC, 2-wire
  A: AC, 2-wire
- **Operating distance**
  02: 2mm
  04: 4mm
- **Series**
  T: Shielded, slim type
  N: Non-shielded, slim type
- **Basic type**

■ Wiring diagrams

● DC supply/3-wire system

PE-T□D

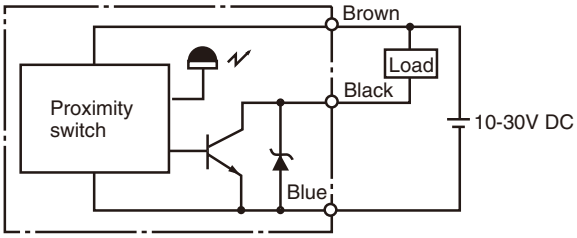

PE-T□Q

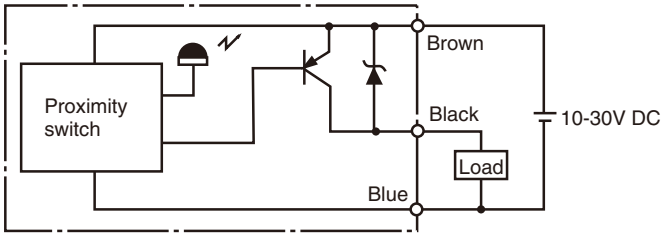

● DC supply/2-wire system

PE-T□S

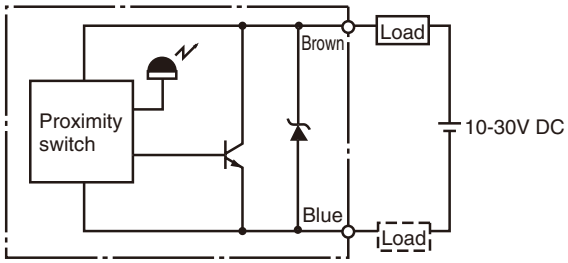

● AC supply/2-wire system

PE-T□A

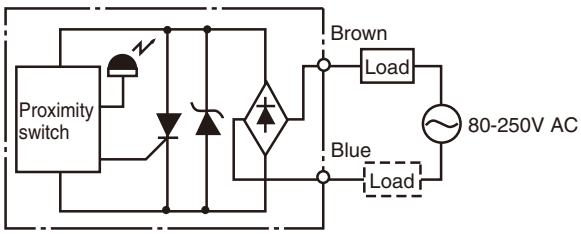

■ Dimensions, mm

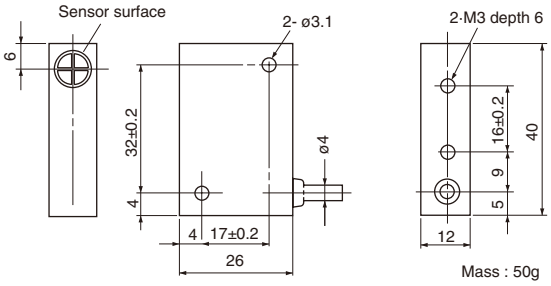

■ Mutual interference:

Be sure to space two switches at a distance greater than that shown in the table below to prevent mutual interference.

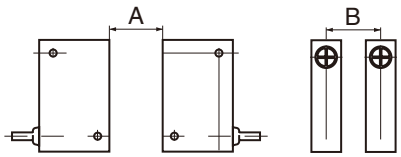

Type	A (mm)	B (mm)
PE-TS2□	24(12)	24(12)
PE-T4□	60(30)	60(30)

Note: The values in parentheses are applicable when using two switches with oscillation frequencies different from each other.

Proximity Switches
PE2-C

Inductive proximity switches– Cylindrical type, PE2-C

The lineup of PE2-C series proximity switches has been augmented by the addition DC 3-wire system switches with NPN and PNP transistor outputs and 2-wire system switches usable for both AC and DC applications.

These new switches are characterized by:
- A stable operating indicator composed of a two-color (red and green) LED that enables easy and reliable setting of detection range
- Smaller dimensions and longer detecting distance due to incorporation of new IC
- Four ways to configure DC 2-wire systems, DC 3-wire systems (which provide NPN and PNP transistor outputs) and two-wire systems usable for both AC and DC applications. This wide choice of configurations makes it possible to choose appropriate switch for the circuit.

The DC 2-wire system
- Reduces wiring cost and labor
- Can be connected to such high impedance load as small relays, PLC, and NC equipment without risk of reset failure due to leakage currents of not exceeding 0.8mA and a residual voltage of 3V.
- Consumes very little current and places no burden on the power supply serving PLC.
  Make a power supply for the sensor unnecessary.
- Enables easy connection on site to load equipment having sink- and source-current input specifications.
- Has protective circuit to protect against short-circuit, reverse polarity, and surges.

The DC 3-wire system:
- Available in 16 types of units, shielded or unshielded, of varying diameter, and providing two types of output
- Also available with PNP output transistors for European machine tool applications.

PE2-C AF91-505

- Has the same external dimensions as the PE1 series which is not equipped with stable operating indicator.

The 2-wire system switch usable for both AC and DC applications:
- Can be operated from sources from 20 to 250V DC and 40 to 250V AC.
- Reduces wiring cost and labor.
- Is unpolarized, eliminating hazard of reverse polarity connection.

C3

■ Specifications

Description	Operating system	Operating distance (mm)	Target size (mm) (iron)	External diameter	Response frequency (Hz)	Supply voltage	Output	Type	Ordering code
Shielded 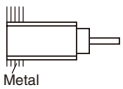 Metal	DC supply/2-wire, current output	2 3 7 10	8×8×1 12×12×1 18×18×1 30×30×1	M8 M12 M18 M30	1500 1000 500 400	12/24V DC Operating voltage range 10 to 30V DC	3 to 100mA 1NO	**PE2-CSN2S** **PE2-CS3S** **PE2-CS7S** **PE2-CS10S**	PE2S02-S PE2S03-S PE2S07-S PE2S10-S
	DC supply/3-wire, NPN transistor output	2 3 7 10	8×8×1 12×12×1 18×18×1 30×30×1	M8 M12 M18 M30	1500 1000 500 400		200mA max. 1NO	**PE2-CS2D** **PE2-CS3D** **PE2-CS7D** **PE2-CS10D**	PE2S02-D PE2S03-D PE2S07-D PE2S10-D
	DC supply/3-wire, PNP transistor output	2 3 7 10	8×8×1 12×12×1 18×18×1 30×30×1	M8 M12 M18 M30	1500 1000 500 400		200mA max. 1NO	**PE2-CS2Q** **PE2-CS3Q** **PE2-CS7Q** **PE2-CS10Q**	PE2S02-Q PE2S03-Q PE2S07-Q PE2S10-Q
	AC/DC supply/2-wire, thyristor output	3	12×12×1	M12	1000 (DC) 25 (AC)	24/48/100/200V DC 48/100/200V AC Operating voltage range 20 to 250V DC 40 to 250V AC	5 to 100mA 1NO	**PE2-CS3W**	PE2S03-W
		7	18×18×1	M18	500 (DC) 25 (AC)			**PE2-CS7W**	PE2S07-W
		10	30×30×1	M30	400 (DC) 25 (AC)			**PE2-CS10W**	PE2S10-W
Non-shielded 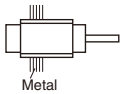 Metal	DC supply/2-wire, current output	4 8 14 24	20×20×1 30×30×1 30×30×1 60×60×1	M8 M12 M18 M30	1000 800 400 100	12/24V DC Operating voltage range 10 to 30V DC	3 to 100mA 1NO	**PE2-C4S** **PE2-C8S** **PE2-C14S** **PE2-C24S**	PE2C04-S PE2C08-S PE2C14-S PE2C20-S
	DC supply/3-wire, NPN transistor output	4 8 14 24	20×20×1 30×30×1 30×30×1 60×60×1	M8 M12 M18 M30	1000 800 400 100		200mA max. 1NO	**PE2-C4D** **PE2-C8D** **PE2-C14D** **PE2-C24D**	PE2C04-D PE2C08-D PE2C14-D PE2C24-D
	DC supply/3-wire, PNP transistor output	4 8 14 24	20×20×1 30×30×1 30×30×1 60×60×1	M8 M12 M18 M30	1000 800 400 100		200mA max. 1NO	**PE2-C4Q** **PE2-C8Q** **PE2-C14Q** **PE2-C24Q**	PE2C04-Q PE2C08-Q PE2C14-Q PE2C24-Q

Fuji Electric FA Components & Systems Co., Ltd.
Information subject to change without notice

■ Specifications

Type	**PE2-C□S** (DC supply/2-wire)	**PE2-C□D** (DC supply/3-wire)	**PE2-C□Q**	**PE2-C□W** (AC/DC supply/2-wire)
Output	Tranisistor output	NPN transistor, open collector output	PNP transistor, open collector output	Thyristor output
Ambient temperature	–25 to 80°C (no icing)			
Differential distance	Max. ±10% of operating distance			
Variation due to temperature fluctuation	Max. ±10% of operating distance at 20°C within a temperature range of –25 to 70°C			
Variation due to voltage fluctuation	Max. ±2% of operating distance at rated voltage when operated within ±15% of power supply voltage			
Current consumption	—	25mA max. (at 24V DC)		—
Leakage current	0.8mA max. (at 24V DC)	—		0.8mA max. (at 24V DC), 1.3mA max. (at 240V AC)
Residual voltage	3V max. (at 100mA)	1.5V max. (at 24V DC, 200mA)		6V max. (DC), 10V max. (AC)
Dielectric strength	1000V AC, 1 minute			
Insulation resistance	50MΩ or more (500V DC megger)			
Degree of protection	IP67 (IEC Standards)			
Vibration	10–55Hz, 1.5mm double amplitude (in X, Y, Z direction respectively for 2 hours)			
Shock	500m/s²			
Circuit protection	Short-circuit, reverse polarity, surge voltage			Surge voltage

□□□

■ Response curve for iron (Typical)

PE2-CS(N)2□
PE2-C4□

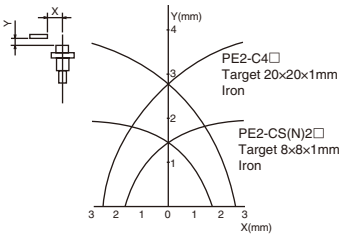

PE2-CS3□
PE2-C8□

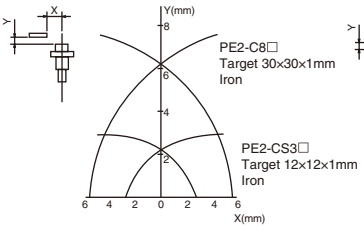

PE2-CS7□
PE2-C14□

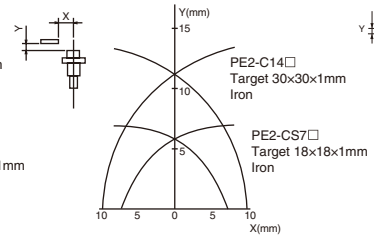

PE2-CS10W
PE2-C24□

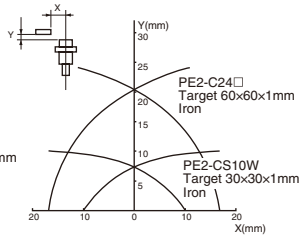

■ Accessories (optional)

● Mounting bracket

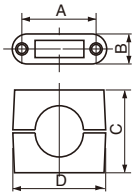

Type (Ordering code)	A (mm)	B (mm)	C (mm)	D (mm)	Screw	Used with
PX1-P8 (PE1Z0037)	18	10	18	28	M4×20	PE2-CS(N)2□ PE2-C4□
PX1-P12 (PE1Z0033)	24	12.5	20	37	M4×25	PE2-CS3□ PE2-C8□
PX1-P18 (PE1Z0034)	32	17	30	47	M5×32	PE2-CS7□ PE2-C14□
PX1-P30 (PE1Z0035)	45	17	50	60	M5×50	PE2-CS10W PE2-C24□

● Sensor surface cover

KK02-301A

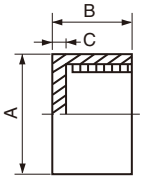

Type (Ordering code)	A (mm)	B (mm)	C (mm)	Used with
PX1-C12S (PE1Z0030)	ϕ15	5	0.6	PE2-CS3□
PX1-C18S (PE1Z0031)	ϕ22.5	8	1.1	PE2-CS7□
PX1-C30S (PE1Z0032)	ϕ35	12	1.6	PE2-CS10W

Proximity Switches
PE2-C

■ Residual voltage characteristics

PE2-CS□S, C□S, 12V SC

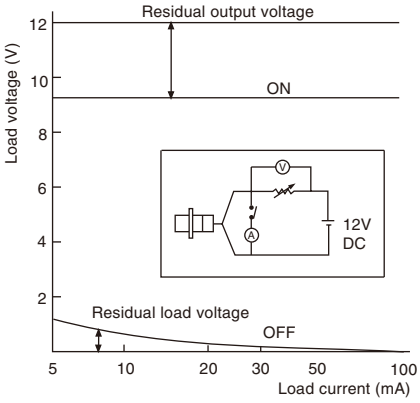

PE2-CS□S, C□S, 24V DC

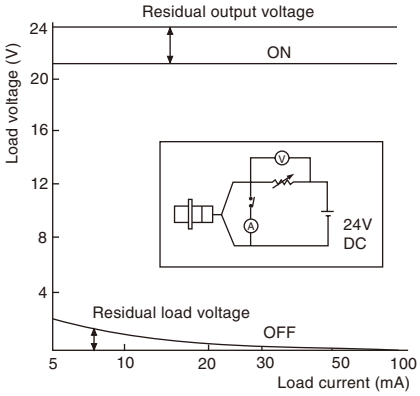

PE2-CS□W, 24V DC

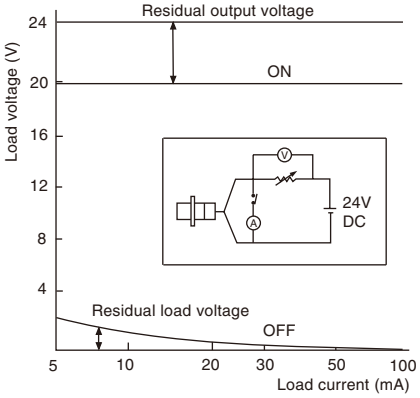

PE2-CS□W, 100V AC

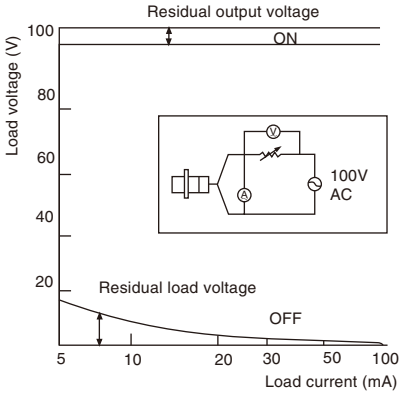

PE2-CS□W, 200V AC

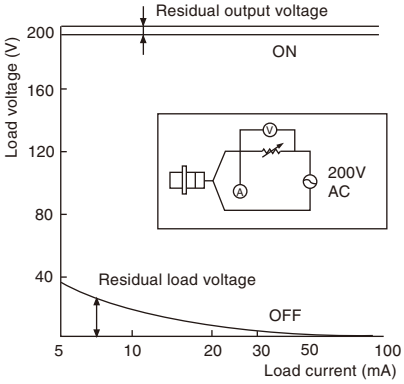

■ Leakage current characteristics

PE2-CS□S, C□S

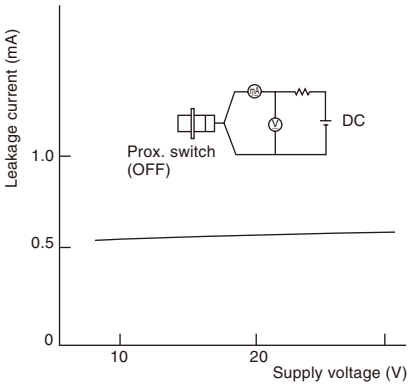

PE2-CS□W

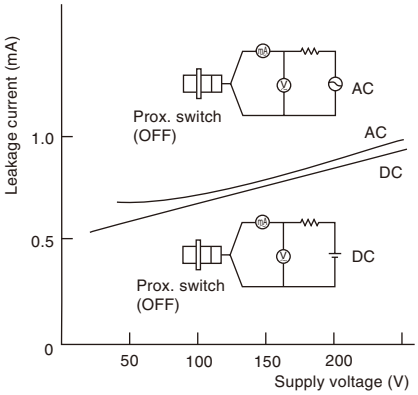

■ Wiring diagrams

● DC supply/2-wire system
PE-C□S

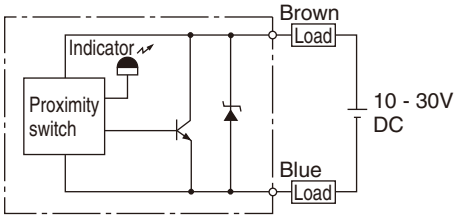

● DC supply/3-wire system
PE2-C□N NPN output

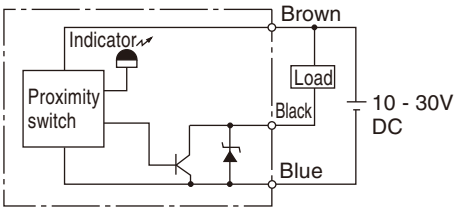

● DC supply/3-wire system
PE2-C□P PNP output

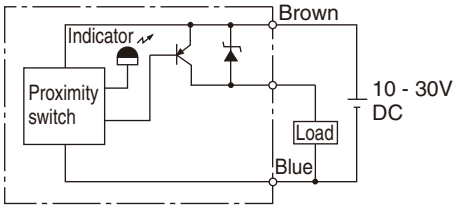

● AC/DC supply/2-wire system
PE2-C□W

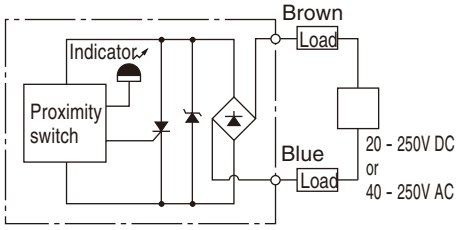

■ Dimensions, mm

PE2-CSN2S, PE2-CS2□

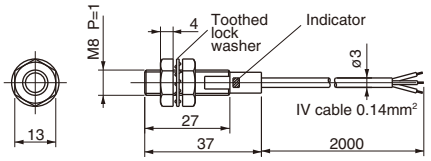

Mass: 40g

PE2-C4□

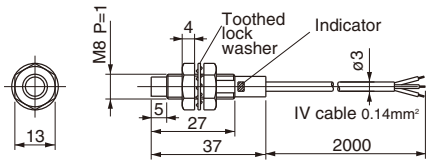

Mass: 40g

PE2-CS3W

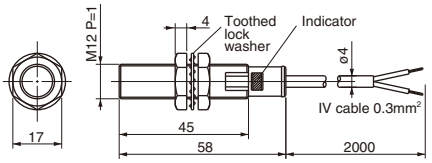

Mass: 100g

PE2-CS3□

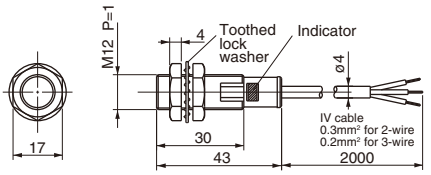

Mass: 70g

PE2-C8□

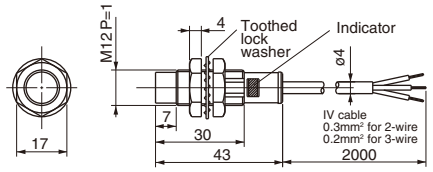

Mass: 70g

PE2-CS7W

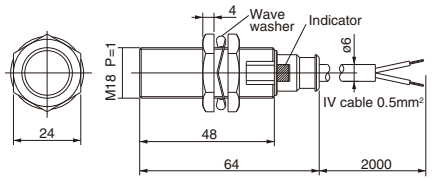

Mass: 170g

PE2-CS7□

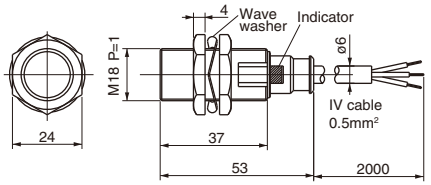

Mass: 160g

PE2-C14□

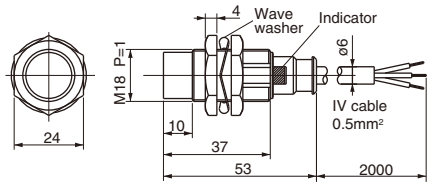

Mass: 160g

PE2-CS10W

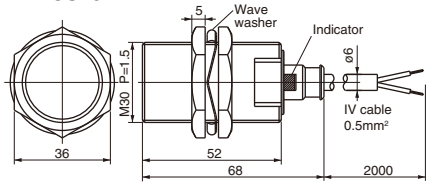

Mass: 340g

PE2-C24□

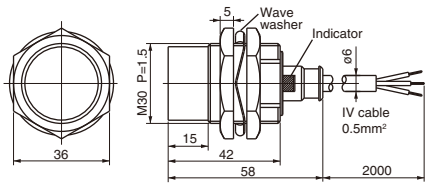

Mass: 280g

PE2-CS3S

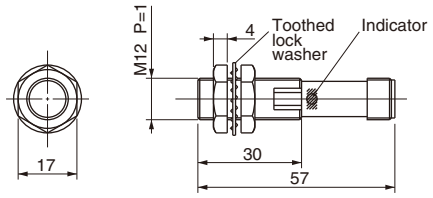

Mass: 30g

PE2-CS7S

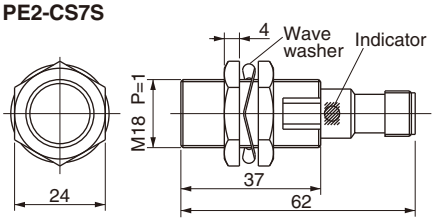

Mass: 60g

PE2-CS10S

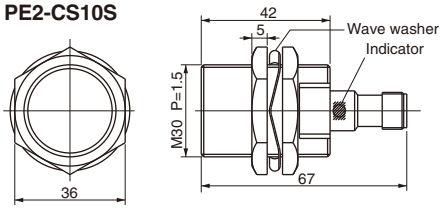

Mass: 170g

Plug for connector

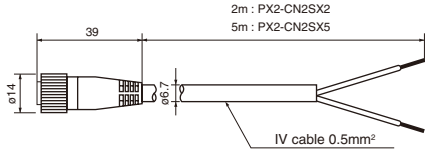

Note: A mark band is attached when the oscillation frequency differs from that of standard products.

■ Mutual interference:

Be sure to space two switches at a distance greater than that shown in the table at right to prevent mutual interference.

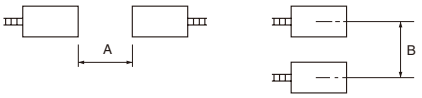

Type	A (mm)	B (mm)
PE2-CS(N)2□	20	15
PE2-CS3□	30 (15)	20 (12)
PE2-CS7□	50 (25)	35 (18)
PE2-CS10W	100 (50)	70 (35)
PE2-C4□	80	60
PE2-C8□	120 (60)	80 (40)
PE2-C14□	200 (100)	120 (60)
PE2-C24□	350 (175)	250 (125)

Note: The values in parentheses are applicable when using two switches with oscillation frequencies different from each other.

■ Ordering information

Specify the following:

1. Type number or ordering code

Proximity Switches
PE-X3D

Inductive proximity switches–Flat type, PE-X3D

Easy-to-mount thin inductive type proximity switches

Operating system:
DC supply/3-wire system
Operating distance: 3mm

■ Features
- A mere 7mm height
- Only two screws are needed to affix each switch, eliminating the need for exclusive mounting brackets
- Incorporates a stable operating level indicator
- Equipped with surge suppression circuits and protection circuits against reverse polarity

KKD19-088

PE-X3D

■ Specifications

Type (Ordering code)	**PE-X3D** (PE1X03-D)
Operating system	DC supply/3-wire
Output	NPN transistor, current output, 1NO
Operating distance	3mm ±10%
Target size	12 × 12 × 1mm (iron)
Differential distance	Max. ±10% of operating distance
Power supply voltage	12/24V DC
Operating voltage range	10 to 30V DC
Current consumption	15mA max. at 24V DC
Switching capacity	100mA max.
Residual voltage	1.5V max. at 24V DC 100mA
Response frequency	50Hz or more
Ambient temperature	–25 to +70°C (no icing)
Humidity	35 to 95% RH
Circuit protection	Surge voltage, reverse polarity
Variation due to temperature fluctuation	Max. ±10% of operating distance at 20°C within temperature range of –25 to +70°C
Variation due to voltage fluctuation	Max. ±1% of operating distance at 12/24V DC when operated within 85% to 115% of power supply voltage
Dielectric strength	1000V AC, 1 min.
Insulation resistance	50MΩ (500V DC)
Degree of protection	IP66 (IEC Standard)
Vibration	10–55Hz, 1.5mm double amplitude
Shock	500m/s²

■ Wiring diagram

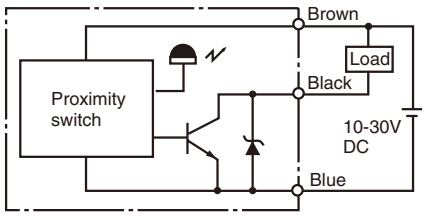

■ Dimensions, mm

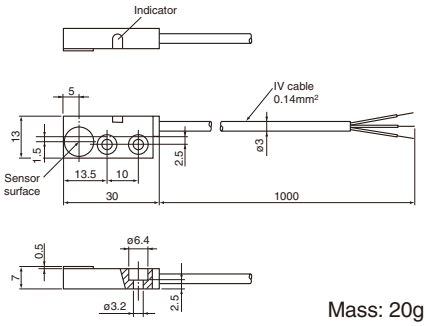

Mass: 20g

■ Response curve for iron

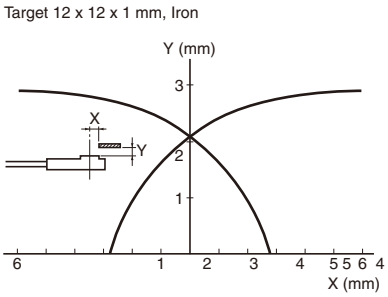

■ Material of target–Operating distance

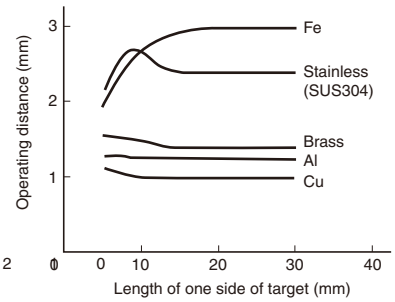

■ Mutual interference

Be sure to space two switches at a distance greater than that shown in the figure below to prevent mutual interference.

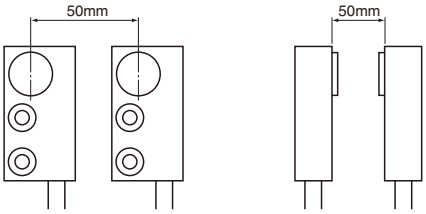

■ Ordering information

Specify the following:
1. Type number or ordering code

Inductive proximity switches– Square type, PE-G4D

Operating system:
DC supply/3-wire system
Supply voltage range: 10 to 30V DC
Operating distance: 4mm

■ Features

- Degree of protection meets the requirements of IEC IP67, thus permitting operations in unfavorable environment.
- Only two screws are needed to affix each switch, eliminating the need for exclusive mounting brackets.
- Incorporates surge suppression circuits and protection circuits against reverse polarity and short-circuits.

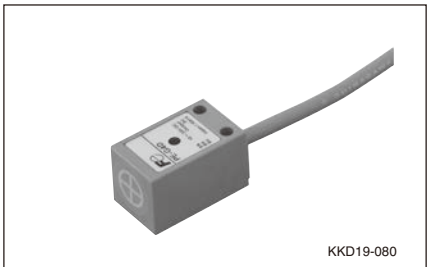

PE-G4D

■ Response curve for iron

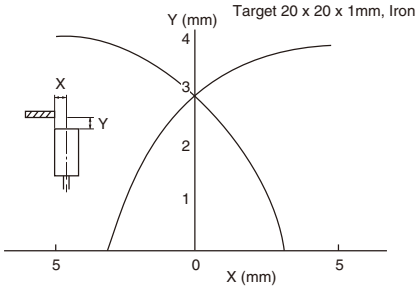

■ Specifications

Type (Ordering code)	**PE-G4D (PE1G04-D)**
Operating system	DC supply/3-wire
Output	1NO
Operating distance	4mm ±10%
Target size (iron)	20×20×1mm
Differential distance	Max. ±10% of operating distance
Rated voltage	12/24V DC (10 to 30V DC)
Switching capacity	50mA max.
Current consumption	15mA max. at 24V DC
Residual voltage	1.5V max. at 50mA
Response frequency	200Hz
Variation due to voltage fluctuation	Max. ±1% of operating distance at 12/24V DC when operated within 10 to 30V DC
Variation due to temperature fluctuation	Max. ±10% of operating distance at 20°C within temperature range of –25 to +70°C
Dielectric strength	2000V AC, 1min.
Insulation resistance	50MΩ or more (500V DC)
Degree of protection	IP67 (IEC)
Ambient temperature	–25 to +70°C (no icing)
Humidity	35 to 95% RH
Vibration	10–55Hz, 1.5mm double amplitude
Shock	500m/s²

■ Mutual interference

Be sure to space two switches at a distance greater than that shown in the figure below to prevent mutual interference.

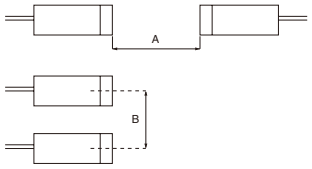

Type	A (mm)	B (mm)
PE-G4D	60	60

■ Ordering information

Specify the following:
1. Type number or ordering code

■ Wiring diagrams

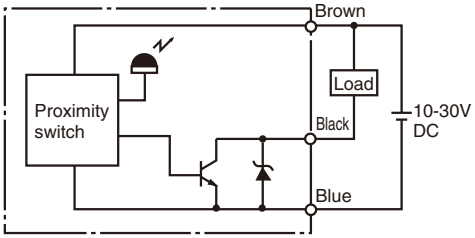

■ Dimensions, mm

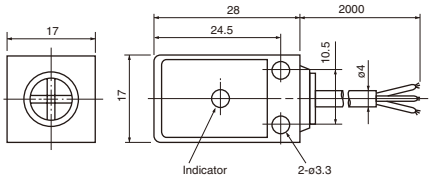

Mass: 40g

Proximity Switches
PE2-LA10D

Analog distance sensor
PE2-LA10D

Supply voltage range: 12 to 24V DC
Operating distance: 2 to 10 mm

■ Features

Output as analog at a distance (2 to 10 mm) up to the detector (metal).

- DC free power supply compatible (12 to 24 V DC)
- In addition to the voltage output type, a current output type not susceptible to transmission line resistance is also available.

KKD07-039

PE2-LA10D

■ Specifications

Type (= Ordering code)	**PE2-LA10D**	**PE2-LA10D2**
Operating distance	10mm	
Detection distance	2 to 10mm	
Standard detector (iron)	40×40×1mm	
Rated supply voltage	12 to 24V DC	
Allowable voltage range	10.8 to 26.4V DC	
Current consumption	12 mA or less (excluding load current)	15 mA or less (excluding load current)
Output	Voltage output: 1 to 5V Deviation: ±5% FS or less *1	Current output: 4 to 20mA Deviation: ±5% FS or less *1
Load impedance	2kΩ or above	200Ω or less at 12V DC 300Ω or less at 24V DC
Operational ambient temperature	–25 to +70°C	
Ambient operating humidity	35 to 95%RH	
Standard cable length	0.3m	
Temperature characteristic	±5% FS or less of the output voltage (or current value) in the reference state at a range from -20 to 70˚C	
Voltage characteristics	±0.5% FS or less of the output voltage (or current value) in the reference state at a variation of ±10% the rated voltage	
Withstand voltage	1000V AC 50/60Hz, 1minute, between charger group and case	
Isolation resistance	50MΩ or more (500V DC megger), between charger group and case	
Vibration resistance	10 to 55Hz double amplitude 1.5mm, each direction X, Y, Z for 2hours	
Shock resistance	500m/s², each direction X, Y, Z 10times	
Protective structure	IP67 (IEC Standard)	

Note *1: Values in reference state (ambient temperature: 20˚C; power supply voltage: 24 V; load: 10 kΩ (voltage output) or 250Ω (current output); detector: standard detector)

■ Ordering information

Specify the following:
1.Type number or ordering code

■ Characteristic data (typical example)

- Distance - output voltage characteristic
  PE2-LA10D

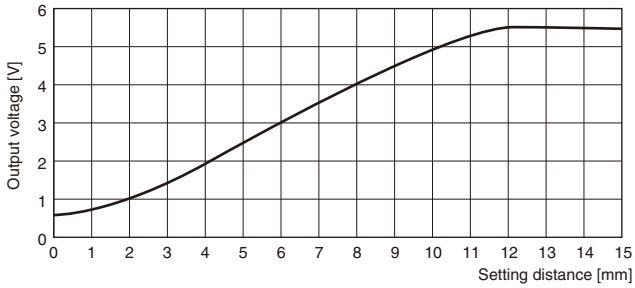

- Distance - output current characteristic
  PE2-LA10D2

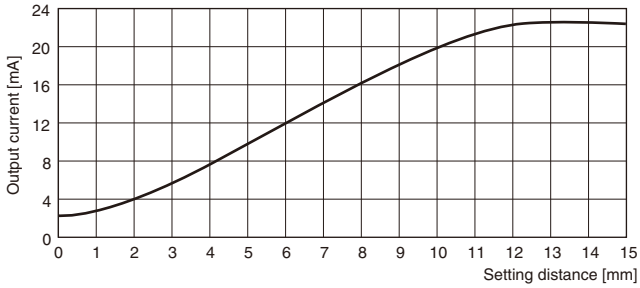

Fuji Electric FA Components & Systems Co., Ltd.
Information subject to change without notice

■ Wiring diagrams

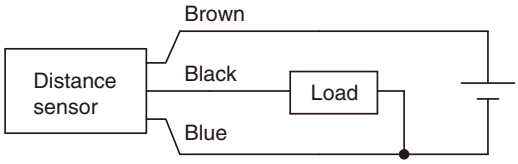

■ Dimensions, mm

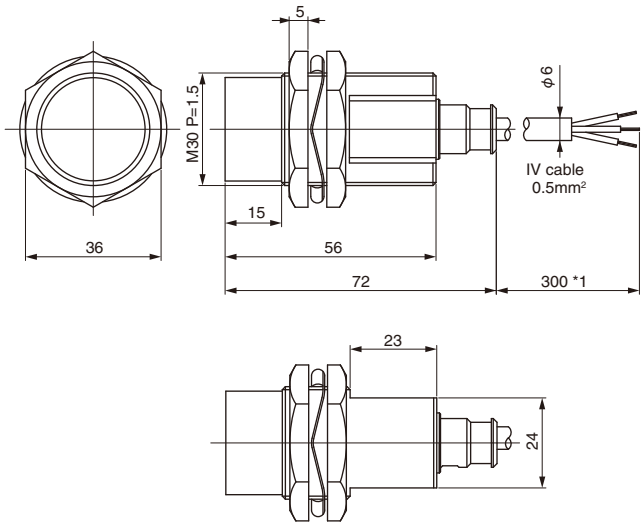

*1: Standard is 300 mm. Please contact us regarding 1 m, 3 m or 5 m.

Proximity Switches
Magnetically operated reed switches - slot type PM1U

Magnetically operated reed switches–Slot type PM1U

■ Features

- Stable switch operation is ensured by inserting the object for detection 35mm into the switch slot.
  Ideal for detecting the position of a ferromagnetic-material plate passing in the switch slot.
- Magnetically operated switch using a sealed contact is never affected by electrical noise, ensuring highly reliable detection.
- The built-in permanent magnet enables switching of both AC and DC signals without using a power supply.
- Models with an output indicator are also available.
- Our advanced design assures superior environmental protection complying with IP67 (IEC).

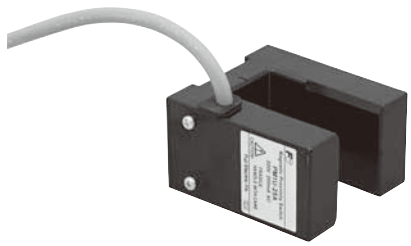

PM1U

PM1U-25A_R

■ Ordering information

Specify the following:
1. Type number (ordering code)

C3

■ Specifications

Operating slot width	Detecting distance*	Hysteresis	Contact arrangement	Output indicator	Type (=Ordering code)	Measurement conditions for an operating position and hysteresis
25mm	+4 ±6mm	10mm (Max.)	1NO (ON: Detected)	Not provided	**PM1U-25ALF**	
				Provided	**PM1U-25ALF2**	
	–4 ±6mm	7mm (Max.)	1NC (OFF: Detected)	Not provided	**PM1U25BLF**	
				Provided	**PM1U-25BLF2**	

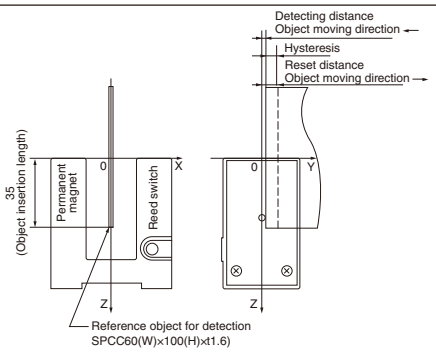

Note *: The detecting distance and hysteresis are defined in the standard detecting conditions shown above.

Type	**PM1U-25ALF**	**PM1U-25ALF2**	**PM1U-25BLF**	**PM1U-25BLF2**
Output indicator	Not provided	Provided	Not provided	Povided
Operating slot width	25mm			
Object insertion length	35mm (Min.)			
Rated operating voltage	220V AC, DC (Max.)			
Rated operating current	0.2A (Max.)			
Make and break current	0.2A (Max.)			
OFF → ON response time	2ms (Max.)			
ON → OFF response time	0.5ms (Max.)			
Life expectancy (Mechanical)	1×10^7 operations (Min.)			
Life expectancy (Electrical)	2×10^6 operations (Min.) Load: Miniature control relay HH54P 220V AC/7mA			
	3×10^6 operations (Min.) Load: Miniature control relay HH54P 100V AC/14mA			
	2×10^6 operations (Min.) Load: Resistance (24V DC/0.2A)			
	1×10^7 operations (Min.) Load: Resistance (12V DC/0.2A)			
Ambient temperature	–10 to +65°C			
Humidity	45 to 95%HR			
Vibration resistance	10 to 55Hz, 1.5mm peak-to peak amplitude, 2-hour for each of X, Y, and Z axes			
Shock resistance	300m/s², three-time for each of X, Y, and Z axis			
Output resistance at ON	6Ω (Max.)	–	6Ω (Max.)	–
Switch residual voltage at ON	–	4V (Max.)	–	4V (Max.)
Insulation resistance	100MΩ (Min.)			
Degree of protection	IP67 (IEC standard)			
Maximum signal cable length	300m			

Note: The LED indicator becomes dark when the load current is 10mA or less. (Switches with an output indicator)
1 meter lead wire is provided.

■ Object detection area (Examples)

PM1U-25A

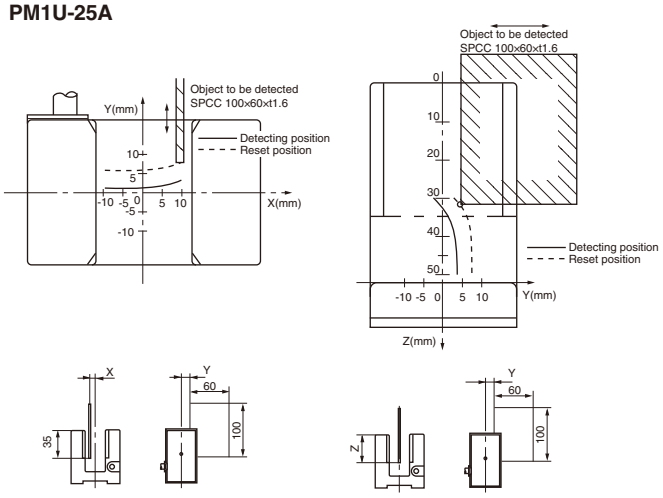

Note: The X - Y characteristics are symmetrical to the X axis.

Note: The Y - Z characteristics are symmetrical to the Z axis.

PM1U-25B

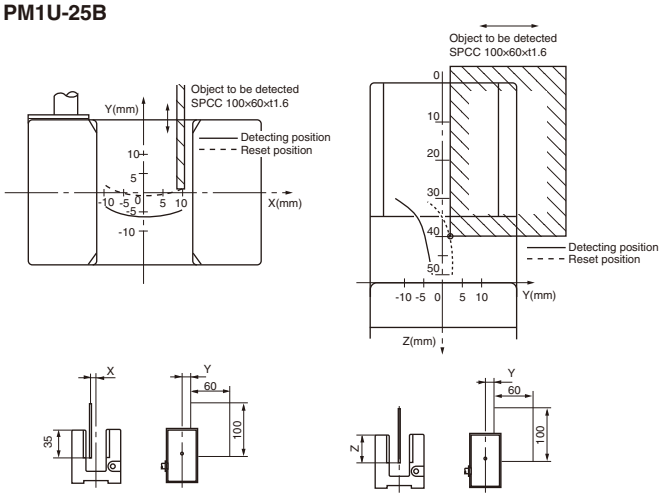

Note: The X - Y characteristics are symmetrical to the X axis.

Note: The Y - Z characteristics are symmetrical to the Z axis.

■ Wiring diagrams

Switch with no output indicators

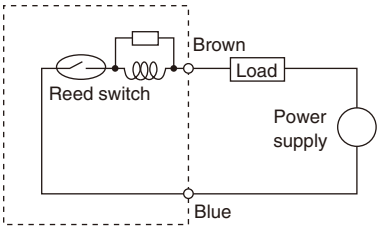

Switch with an output indicator

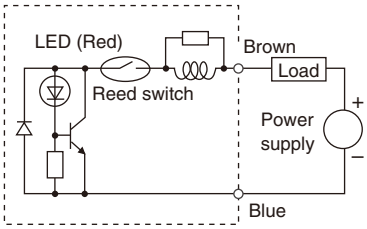

Note: When using a DC power supply, connect the brown terminal to (+) and blue terminal to (0V). Otherwise, the indicator will not go on.

■ Operation chart

PM1U-25A□

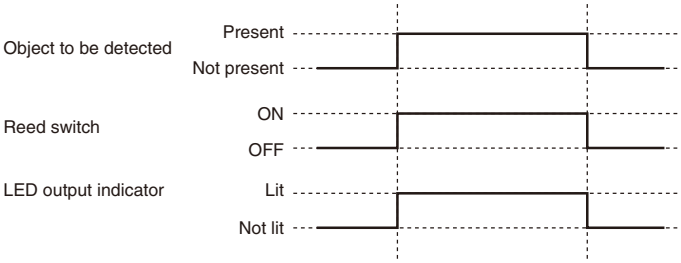

PM1U-25B□

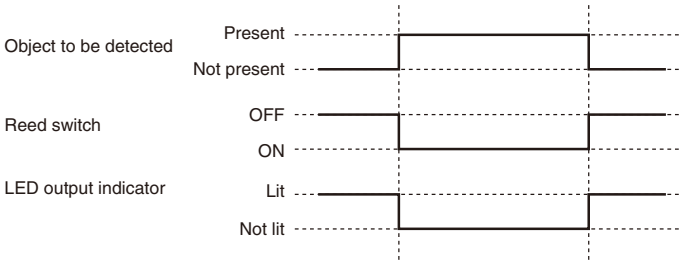

■ Dimensions, mm

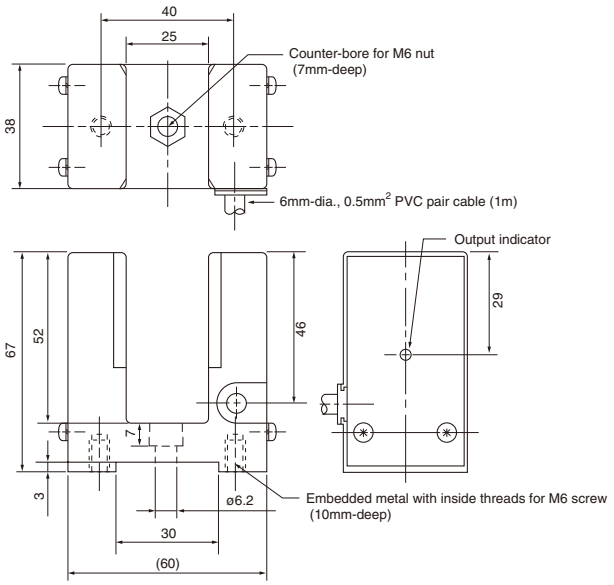

C3

Proximity Switches
Magnetically operated reed switches AES

Magnetically operated reed switches AES

Small size
Operating distance: Max. 20, 27mm
Reed switch: 1NO
Rated thermal current: 2.5A (AES402)
2.5A (AES502)

■ Features
- Power source is not required.
  AES402 is small size, soldering terminal.
  AES502 is provided with lead wire.
- Epoxy resin molded, shock-resistant.
- Make and break capacity:
  Max. 50VA, 50W (AES402)
  Max. 50VA, 50W (AES502)
- Operating voltage:
  Max. 220V AC, DC (AES402)
  Max. 220V AC, DC (AES502)

■ Ordering information
Specify the following:
1. Type number or ordering code

■ Specifications

Type		Contact Magnet	AES402B-1A AEQ010-1A	AES502L-3A AEQ020-1T
Ordering code		Contact Magnet	PM2B PM34	PM2D PM35
Contact			1NO	
Operating distance Differential			14–20mm 1–12mm	20–27mm 1–14mm
Repeat accuracy			0.5mm or less	
Ambient temperature			–20°C to +80°C	
Dielectric strength Between open contacts Terminal to ground			700V AC, 1 min. 1500V AC, 1 min.	350V AC, 1 min. 1500V AC, 1 min.
Insulation resistance			100MΩ or more at 500V DC	100MΩ or more at 500V DC
Life expectancy	Mechanical		10 million operations	
	Electrical		2 million operations at 100V AC 3.3VA	2 million operations at 100V AC 3.3VA

■ Response curves
Short axis

Contact: AES402B-1A
Magnet AEQ010-1A

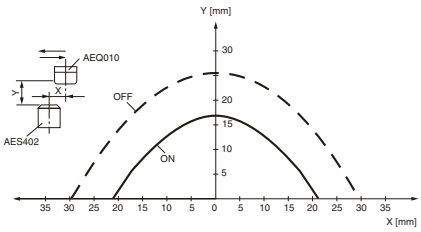

Contact: AES502L-3A
Magnet AEQ020-1T

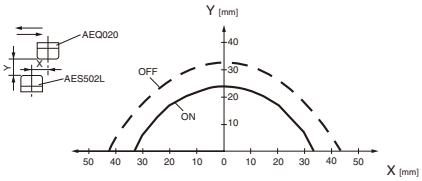

■ Dimensions, mm
AES402B-1A

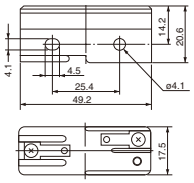

AEQ010-1A

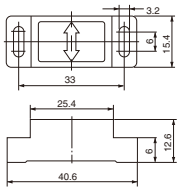

AES502L-3A

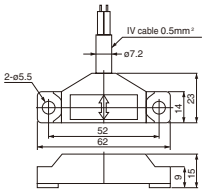

AEQ020-1T

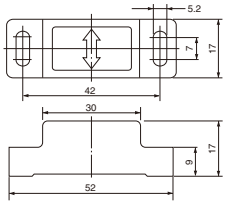

Mass:
AES402B-1A: 20g
AES502L-3A: 85g
AEQ010-1A: 20g
AEQ020-1T: 25g

■ Wiring
AES402B-1A

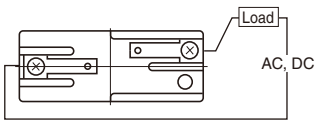

AES502L-3A

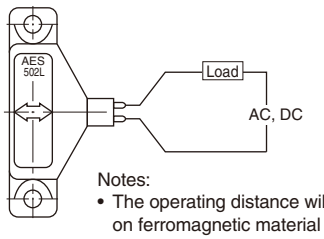

Notes:
- The operating distance will be decreased when mounted on ferromagnetic material such as iron.
- Both reed switch and magnetic elements can not be used in over 5-Gauss magnetic fields.

Magnetically operated reed switches AER

Operating distance: 4.0–5.5mm (at 1NO)
Reed switch: 1NO or 1NC
Rated thermal current: 2.5A

■ Features

- Sensing magnetic element and reed switch element are integrated in an epoxy molded housing.
- Power source is not required.
- Travelling direction of the metal object is not limited.
- Make and break capacity: Max. 50VA AC, 50W DC
- Operating voltage: Max. 220V AC, DC
- Water- and dust-tight

■ Construction

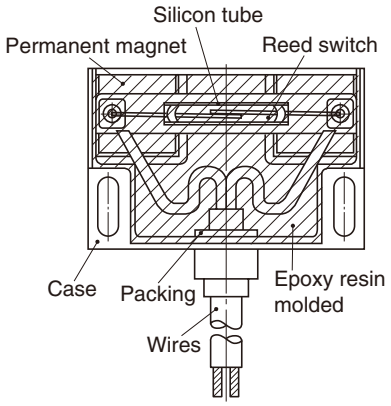

Notes:
- The operating distance will be decreased when mounted on ferromagnetic material such as iron.
- This switch cannot be used in over 5-Gauss magnetic fields.
- Keep a distance of over 100mm from other limit switches.

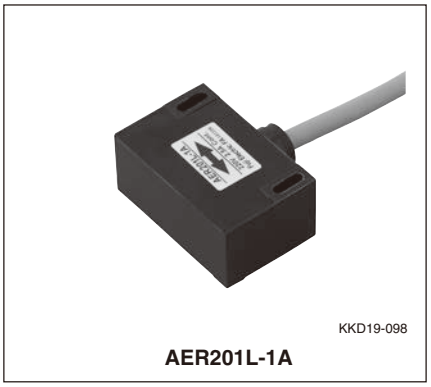

AER201L-1A

■ Specifications

Type (Ordering code)		**AER201L-1A** (PM1A)	**AER211L-1A** (PM1B)
Contact arrangement		1NO	1NC
Rated voltage AC, DC		220 max.	220V max.
Rated thermal current		2.5A	2.5A
Make and break current		Max. 0.5A AC, DC	Max. 0.5A AC, DC
Operating distance		4.0–5.5mm	3.5–5.0mm
Differential		1–5.5mm	1–5.5mm
Repeat accuracy		Less than 0.5mm	Less than 0.5mm
Ambient temperature		–20° to +80°C	–20° to +80°C
Dielectric strength		350V AC rms. 1 minute (Between open contacts)	
		1500V AC rms. 1 minute (Terminal to ground)	
Insulation resistance		Over 100MΩ at 500V DC	
Life expectancy	Mechanical	10 million operations	
	Electrical	2 million operations at 100V AC 3.3VA (Inductive)	
		2 million operations at 100V DC 1.6W (Inductive)	
		10 million operations at 12V DC 6W (Resistive)	

Notes:
- 1 meter lead wires are normally provided.
- The standard detected object is iron plate of 50 × 50 × 2 (mm). If the object is smaller, the operating distance is reduced.

■ Response curves

AER20 Short axis

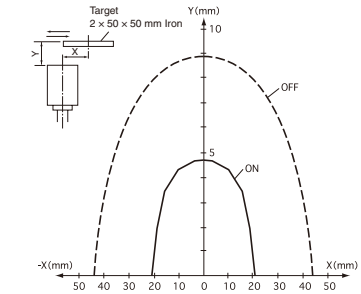

AER20 Long axis

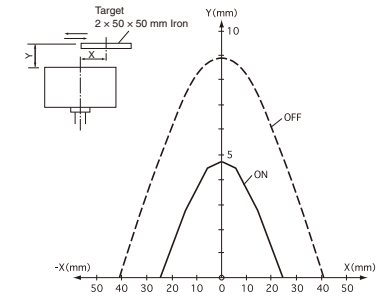

AER21 Short axis

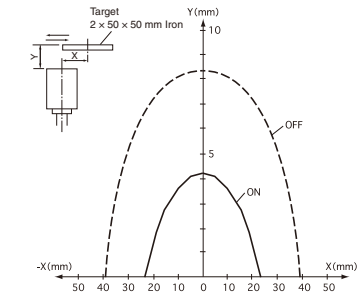

AER21 Long axis

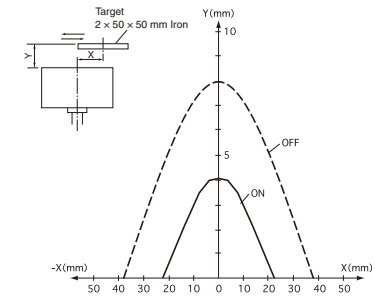

■ Wiring

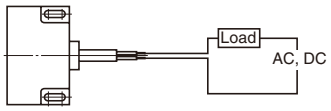

■ Ordering information

Specify the following:
1. Type number or ordering code

■ Dimensions, mm

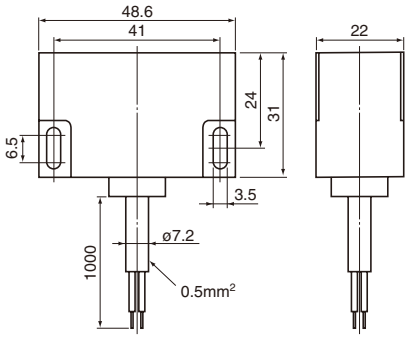

Mass: 100g

Photoelectric Switches
General information

Selection guide

Basic type	**PH1C**
Photo	XX03-013A
Description	Highly compact photoelectric switch with dimensions of 10.8x31x20mm. Energy saving design with long-distance detection and a built-in amplifier. Meets CE Mark requirements.
Detecting method	Transmission type Retroreflective type Diffuse reflection type
Operation mode	Dark-ON/Light-ON selectable
Special function	–
Supply voltage	12 to 24VDC ± 10% (ripple ± 10% or less)
Output configuration	Detecting: NPN transistor, open collector output
Output (switching capacity)	100mA max.
Detectable object (material)	Transparent, opaque
Detecting distance	1m, 3m, 4m, 10m
Response time	1ms
Ambient temperature	Operation: –25 to +55°C Storage: –40 to +70°C
Degree of protection	IP67 (IEC)
Page	*C3-48*

■ Detecting method

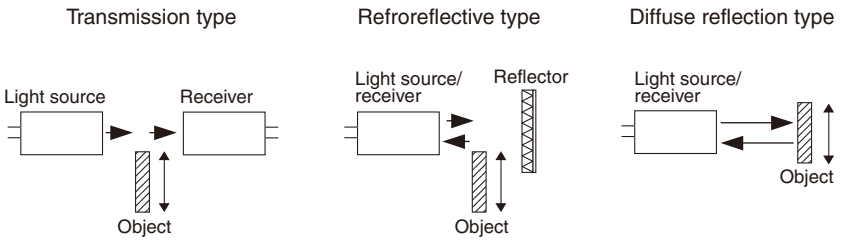

Basic type	**PH8AU**
Photo	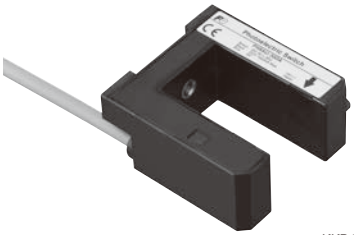 KKD19-085
Description	Slot-type photoelectric switches ideal for conveyor applications, such as elevators and multi-level parking lifts. Same mounting method as our slot-type magnetically operated reed switches (type PM1U).
Detecting method	Slot type
Operation mode	Dark-ON or Light-ON
Special function	–
Supply voltage	10 to 30V DC
Output configuration	NPN transistor, open collector output
Output (switching capacity)	–
Detectable object (material)	Opaque
Detecting distance	30mm
Response time	1ms or less
Ambient temperature	Operation: -25 to +55°C Storage: -30 to +70°C
Degree of protection	IP66 (IEC)
Page	*C3-53*

■ Operation mode

	Transmission type	Retroreflective type	Diffuse reflection type	Slot type
Dark-ON (operates when light is interrupted)	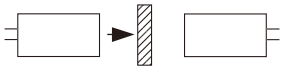	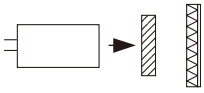	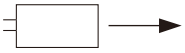 without object	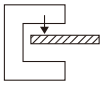
Light-ON (operates when light is incident)		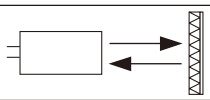	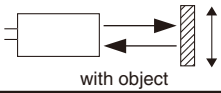 with object	without object

Photoelectric Switches
PH1C

Photoelectric switches with built-in amplifier PH1C

XX03-014A,15A

Transmission type PH1CT

XX03-013A

Retroreflective type PH1CR

Diffuse reflection type PH1CD

XX03-007A

Reflector PH1X

■ Features

- Highly compact with dimensions of 10.8 x 31 x 20mm
- Energy-saving design
- Covers a wide range of detection with distances of 10m (transmission type), 3 or 4m (retroreflective type), or 1m (diffuse reflection type)
- Retroreflective type equipped with mirror surface rejection function
- High-speed response time of 1ms
- Light-ON/Dark-ON selectable with operation mode switch
- Equipped with various protective functions
- High degree of protection of IP67 (IEC) enables use even in environments where exposure to water is possible.
- Improved alignment (±2.5°) of optical and mechanical axes simplifies adjustment (transmission type, retroreflective type)
- Environment-friendly lead-free solder used
- Meets CE Mark requirements.

■ Types

Detecting method	Detecting distance	Light emitting element	Output	Output operation mode	Type	Supplied item	Cable length
Transmission type 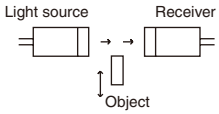	10m	Red LED	NPN transistor, open collector output	Dark-ON / Light-ON selectable	**PH1CT-M1DC**	Light source and receiver	2m
					PH1CT-M1DCSN		5m
					PH1CT-M1DCST		10m
					PH1CT-M1DCR	Receiver	2m
					PH1CT-M1DCRLN		5m
					PH1CT-M1DCT	Light source	2m
					PH1CT-M1DCTLN		5m
Retroreflective type (with mirror surface rejection) 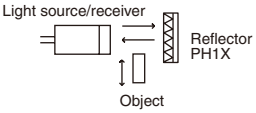	0.1 to 3m (using PH1X-R1) 0.1 to 4m (using PH1X-R1S)	Red LED			**PH1CR-3MDC**	Light source/ receiver	2m
					PH1CR-3MDCLN		5m
Diffuse reflection type 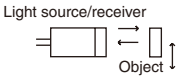	1m	Infrared LED			**PH1CD-1MDC**	Light source/ receiver	2m
					PH1CD-1MDCLL		3m

■ Ratings and specifications

Detection method		Transmission type	Retroreflective type (with mirror surface rejection)	Diffuse reflection type
Type		**PH1CT-M1DC**	**PH1CR-3MDC**	**PH1CD-1MDC**
Light emitting element		Red LED		Infrared LED
Supply voltage		12 to 24V DC ±10% (ripple ±10% or less)		
Current consumption		Light source: 15mA, Receiver: 20mA	30mA max.	
Detecting distance		10m	0.1 to 3m (using PH1X-R1) 0.1 to 4m (using PH1X-R1S)	1m (white mat paper 30 x 30cm)
Detectable target		Opaque 12mm dia. min.	Opaque 75mm dia. min.	Transparent or opaque
Directional angle		Light source and receiver: 3 to 15° each	Light source/receiver: 2 to 10°, Reflector: 30°	–
Differential		–		Max. 20% of detecting distance
Detecting output		NPN transistor, open collector output Load current: 100mA max. (26.4V DC) Residual voltage: 1V DC max. at load current less than 10mA 2V DC max. at load current of 10 to 100mA		
Output operation mode		Dark-ON / Light-ON selectable		
Response time		1ms max. (operation/reset)		
Indicator	Operation indicator	Orange LED (Light source: power supply indicator)	Orange LED	Orange LED
	Stability level indicator	Green LED (Receiver)	Green LED	Green LED
Connection		Attached cable (2m, 0.2mm^2)		
Sensitivity adjustment		Dial		
Ambient operating illumination		Incandescent lamp: 3000 lx max. (at receiving surface) Sunlight: 10000 lx max. (at receiving surface)		
Ambient temperature		Operating: –25 to +55˚C (no icing), storage: –40 to +70˚C		
Ambient humidity		Operating: 35 to 85%RH (no condensation), storage: 35 to 95%RH		
Degree of protection		IP67 (IEC)		
Protective function		Reverse polarity (input), short-circuit and reverse polarity (output)	Reverse polarity (input), short-circuit, reverse polarity (output) and mutual interference	
Insulation resistance		20MΩ (500V DC megger)		
Dielectric strength		1,000V AC for 1min		
Vibration		10 to 55Hz, 1.5mm double amplitude or 300m/s^2 (2 hours for each X, Y, Z direction)		
Shock		500m/s^2 (3 times for each X, Y, Z direction)		
Material	Casing	Polybutylene terephthalate resin (PBT)		
	Lens	Polyarylate resin (PAR)	Methacrylic resin (PMMA)	Polyarylate resin (PAR)
Mass		Approx. 120g	Approx. 65g	Approx. 65g
Accessory (option)		Mounting bracket (PH1X-P1, PH1X-P2)		

Note : Reflectors PH1X-R1 and R1S (for retroreflective type PH1CR use) are sold separately.

■ Type number nomenclature

PH 1C T-M1 D C □ □

Basic type
PH : Photoelectric switch

Series
1C : With built-in amplifier

Detecting method
T : Transmission type
R : Retroreflective type
D : Diffuse reflection type

Detecting distance
1M : 1m
3M : 3m
M1 : 10m

Output
D : NPN transistor, open collector output

Output operatoin mode
C : Dark-ON, Light-ON selectable

Supplied item
Blank : Light source and receiver, (PH1CR, PH1CD)
T : Light source
R : Receiver

Cable length
Blank : 2m
LL : 3m
LN : 5m
SN : 5m (PH1CT-M1DC)
ST : 10m (PH1CT-M1DC)

● **Ordering information**
Specify the following
1. Type number

Photoelectric Switches
PH1C

■ Dimensions, mm

● PH1CT-M1DC

Light source

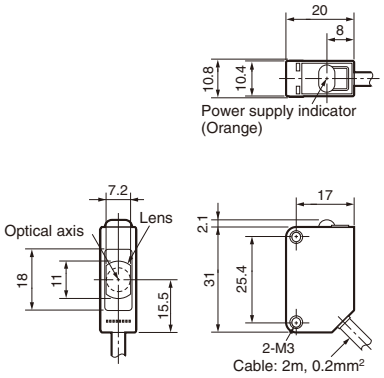

Receiver

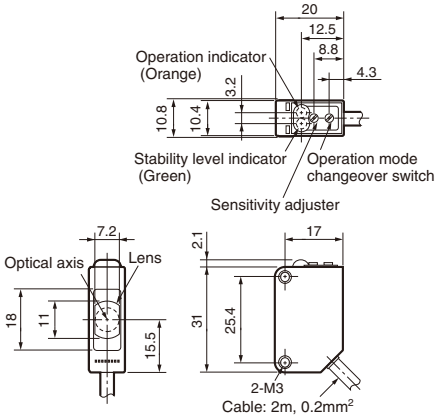

● PH1CR-3MDC, PH1CD-1MDC

Light source/receiver

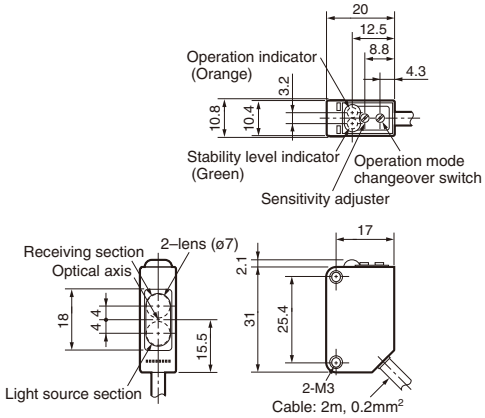

C3

■ Dimensions, mm (sold separately)

● Reflector

PH1X-R1, PH1X-R1S

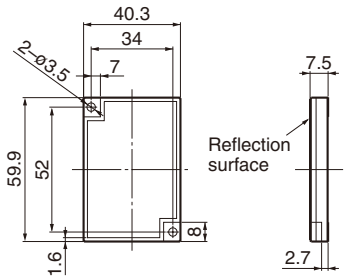

Reflection surface: Methacrylic resin (PMMA)
Reverse side: Acrylonitrile butadiene styrene resin (ABS)

● Mounting bracket

PH1X-P1

Stainless

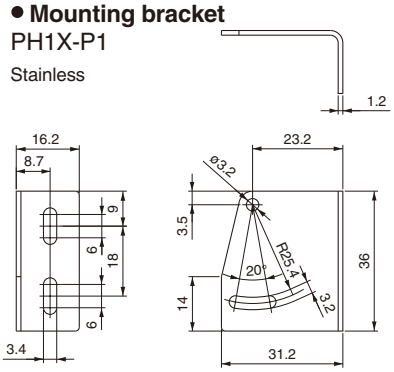

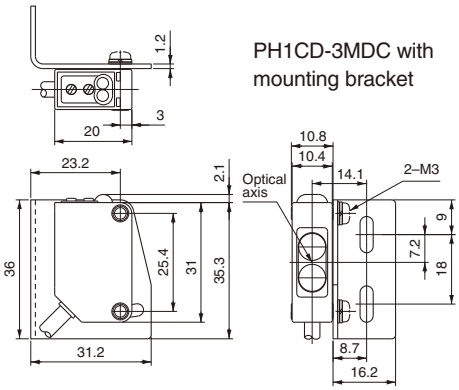

● Slit

PH1X-SP, PH1X-S1, PH1X-S2

Stainless

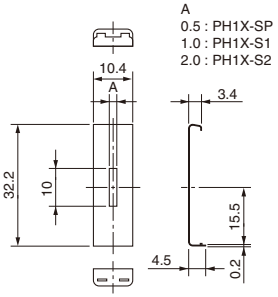

PH1X-P2

Stainless

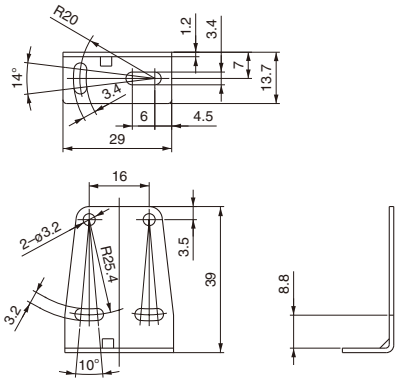

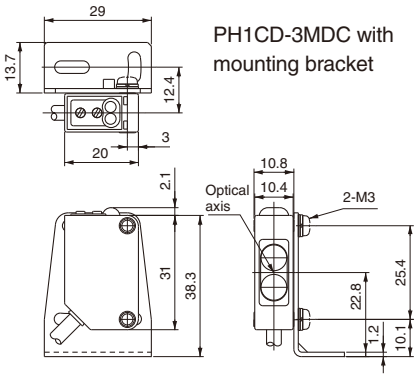

● Detection characteristics using PH1X slit

Photoelective switch	PH1CT-M1DC		
Slit width (mm)	0.5×10	1×10	2×10
Detecting distance (m)	0.7	1.5	3.5
Minimum detectable target (mm dia.)	0.2	0.5	0.8

■ Characteristic curve, typical

● Receiver output-Distance

PH1CT-M1DC

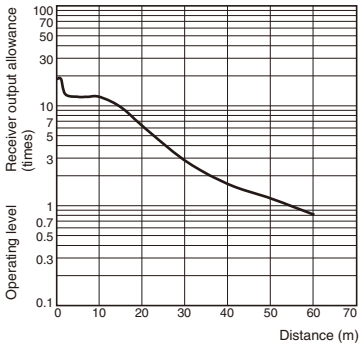

PH1CR-3MDC + Reflector

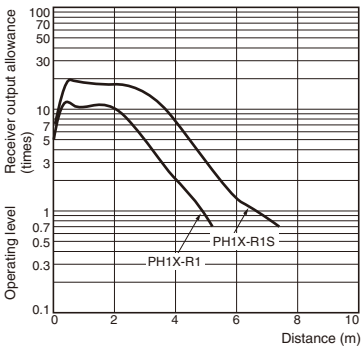

PH1CD-1MDC

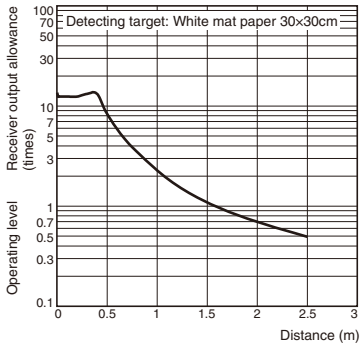

● Setting range of light source and receiver head

PH1CT-M1DC

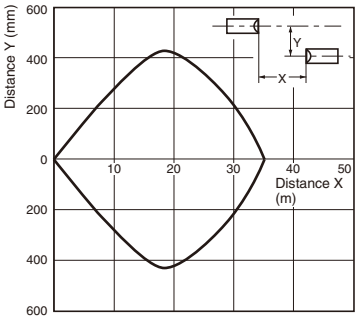

PH1CT-M1DC + Slit

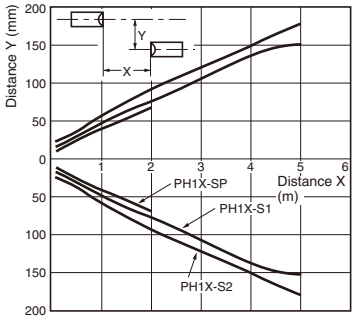

PH1CR-3MDC + Reflector

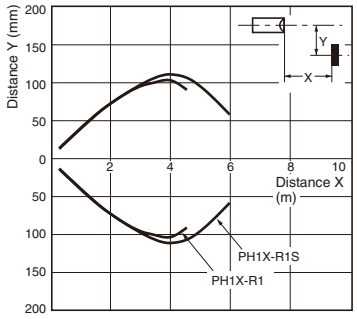

● Size of detecting target - Distance

PH1CD-1MDC

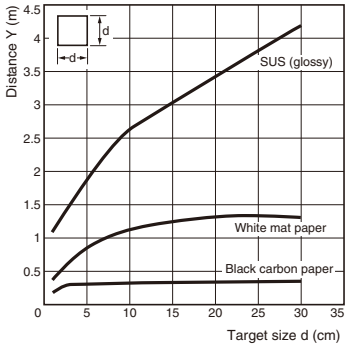

● Operating range

PH1CD-1MDC

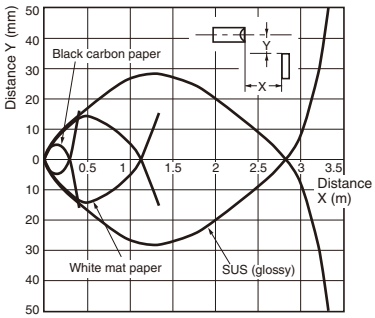

■ Wiring diagrams

PH1CT receiver, PH1CR, PH1CD

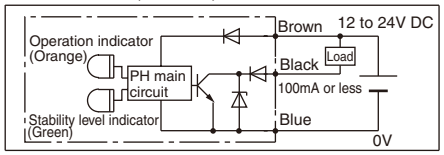

PH1CT light source

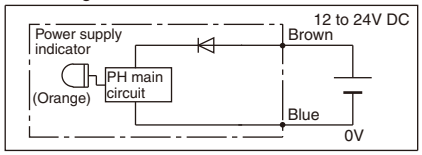

■ Timing diagrams

● "Light-ON" mode (switch: L side)

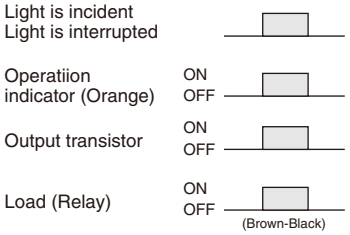

● "Dark-ON" mode (switch: D side)

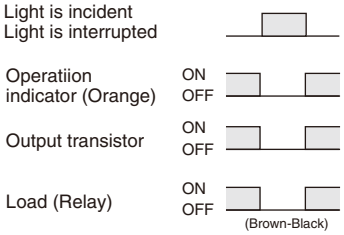

Photoelectric Switches
PH1C

■ Indicator

● Operation indicator (Ope)

Lights when the switch is activated (output transistor ON) irrespective of Light-ON, Dark-ON.

● Stability level indicator (Stab)

Lights when the incident light or shaded light is good enough for stable level.

Status of incident light		Indicator	**Stab**	**Ope**	Allowance
Light-ON	Dark-ON		(green)	(orange)	
Stable incident	Stable shade		ON	ON	Operation level ×1.11
Unstable incident	Unstable shade		OFF	ON	Operation level
Unstable shade	Unstable incident		OFF	OFF	Operation level ×0.86
Stable shade	Stable incident		ON	OFF	

■ Optical axis adjustment

● Transmission type

Swinging the light source and receiver up and down and right and left when no objects exist, set and fix the light source and receiver to the center within the range where the operation indicator (orange) is lit or is turned off (Dark-ON). At the same time make sure that the stability level indicator (green) is lit.

● Retroreflective type

Swinging the unit and reflector up and down and right and left when no objects exist, set and fix the unit and reflector to the center within the range where the operation indicator (orange) is lit or is turned off (Dark-ON). At the same time make sure that the stability level indicator (green) is lit.

■ Sensitivity adjustment

- When carrying a normal detection, set the sensitivity adjuster at the maximum sensitivity value by turning it fully clockwise.
- Sensitivity adjustment is necessary for the following cases.
  - Transmission type: To detect translucent or minute objects
  - Reflection type: To detect objects with inadequate contrast
- Carry out the sensitivity adjustment as follows. (When excessive power is added to the sensitivity adjuster, it might be damaged.)

Step	State of detected object		Operation indicator and sensitivity adjuster		Step
	Transmission type	Reflection type	Light-ON	Dark-ON	
1	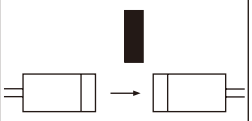	Detected object 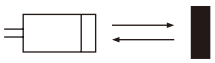	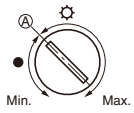	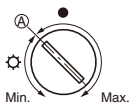	By turning the sensitivity adjuster, obtain point A and B at that the status of the operation indicator changes. Unless the status changed, two points at finishing turning the sensitivity adjuster will be point A or B.
2	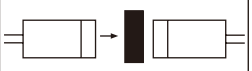	Background object 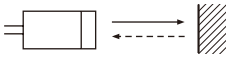	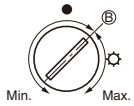	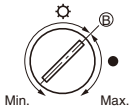	
3	—	—	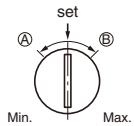	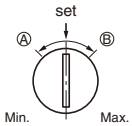	An intermediate position between point A and B will be the optimum position.

Note: ☼ lit, ● not lit

Fuji Electric FA Components & Systems Co., Ltd.
Information subject to change without notice

Slot-type photoelectric switches PH8AU

■ Description

Slot-type photoelectric switches ideal for conveyer application, such as elevators and multi-level parking lifts.
The emitter and receiver are constructed as a single unit, eliminating the need to adjust the optical axis or sensitivity.
Same mounting method as our slot-type magnefically operated reed switches (type PM1U).

■ Features

- Protective structure conforms to IP66 (IEC standards), so the product can be used safely in environments with water droplets.
- High speed response time of 1ms.
- Wide supply operating voltage range from 10 to 30V DC.

KKD19-086

PH8AU

■ Specifications

Type		**PH8AU-30DALF**	**PH8AU-30DBLF**
Operating distance (slot width)		30mm	
Detectable object		Opaque, over 6mm diameter	
Light emitting element		Infrared LED	
Supply voltage		10 to 30V DC (Peak must be within this range)	
Current consumption		45mA or less	
Detecting output		(NPN) transistor open collector output, load current	
		Dark-ON	Light-ON
Response time		1ms or less	
Indicator		Output indicator (Red LED)	
Connection		1m attached cable	
Ambient operating illumination		Incandescent lamp: 3000 lx or less, sun light: 10000 lx or less at receiving surface	
Ambient temperature		Operating: -25 to +55°C Storage: -30 to 70°C (no icing)	
Ambient humidity		Operating: 35 to 85%RH Storage: 35 to 95%RH	
Degree of protection		IP66 (IEC)	
Insulation resistance		20MΩ min. (500V DC Megger)	
Dielectric strength		1000V AC 50/60Hz 1 minute	
Vibration		10 to 55Hz, 1.5mm double amplitude (X, Y, Z direction respectively 2 hours)	
Shock		500m/s^2 three times for each of three directions X, Y and Z	
Protection circuit		Reverse connection and surge voltage	
Material	Lens	PC	
	Casing	PPS	

Photoelectric Switches
PH8AU

■ Wiring diagrams

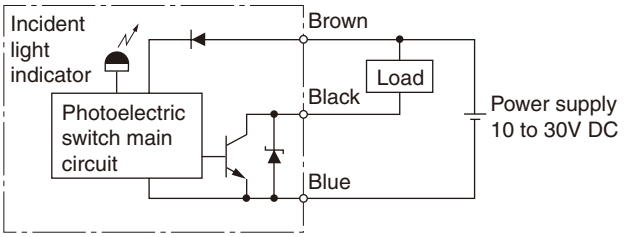

■ Dimensions, mm

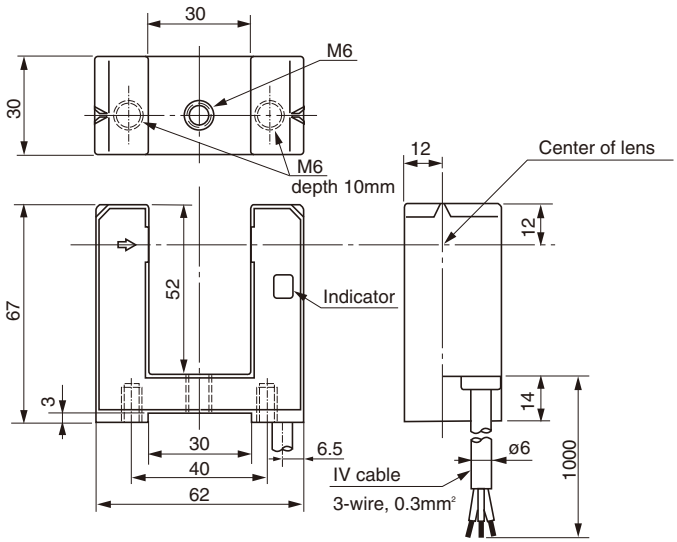

Mass 150g

■ Type number nomenclature

PH8A U-30 D A LF

Basic type

Detecting method
U: Slot type

Detecting distance
30: 30mm

Power supply and output
D: DC supply, NPN transistor open collector output

Operation
A: Dark-ON
B: Light-ON

Cable length
LF: 1m

■ Ordering information

Specify the following:
1. Type number (ordering code)

Measuring Instruments, Arresters, Transducers
Power Factor Controllers
Power Monitoring Equipment (F-MPC)

Page

Switchboard Instruments
WM8N type D1-1
WE1MA type D1-10
WE1MB type D1-21
WE1SA, WE1SV type D1-26
WE1GL type D1-30
WE1B/1C type D1-37
WE1RL type D1-43

Panel Instruments
F type D1-51

Transducers
WS2 Series D1-59
WS3 Series D1-81
WS4 Series D1-83
WS5MT Series D1-105
WF Series D1-111

Surge protective devices
CN56 series D1-139
CN57 series D1-141
CN57-FK series D1-143
CN5B series D1-145
CN5D series D1-147
Dimensions D1-149
CN226 series D1-151
CN226-24A, 48A, 100B D1-153
CN227-CAT5E D1-154
CN227 series D1-155
CN2340, CN2341 ..... D1-157

Instrument Transformers
General information D1-158
Through-type CT/CC3L D1-159
CT with primary winding/CC3P D1-162
Through type CT/CC3M D1-164
Split type CT/CC2 ..... D1-168
Potential transformer/CD32, 34, 36 ..... D1-174
Insulation cap for low-pressure transformer/SB-4064-23 ..... D1-176
Special use, application to overseas standards D1-177
Maintenance and Inspection D1-178
Comparison table between new and old types of low-pressure V/CT D1-179

Power Factor Controllers
Automatic power factor regulator QC06E and QC12E D1-182

Power Monitoring Equipment
General information D1-198
F-MPC60G, F-MPC60B, F-MPC30 ..... D1-199
F-MPC Web unit D1-225
F-MPC04, F-MPC04P, F-MPC04S, F-MPC04E D1-229
F-MPC I/O unit D1-247
Related equipment D1-249
Terminal relay RS16 ..... D1-257
Connector terminal-block AU-CW21B1 ..... D1-258

Digital Panel Meter
WA4000 series D1-259
WA9000 series D1-261
WA2100 series D1-265

Earth Leakage Protective Relays for Low Voltage
CH5 Series D1-266
QL-11B and QL-11F D1-268
QL-30B, QL-31BN, and QL-31BA D1-270
QL-30P D1-272
QL-21B and QL-21F D1-274
QL-51F D1-276

MINIMUM ORDERS

Orders amounting to **less than ¥10,000** net per order will be charged as ¥10,000 net per order plus freight and other charges.

WEIGHTS AND DIMENSIONS

Weights and dimensions appearing in this catalog are the best information available at the time of going to press. FUJI ELECTRIC FA has a policy of continuous product improvement, and design changes may make this information out of date.
Please confirm such details before planning actual construction.

INFORMATION IN THIS CATALOG IS SUBJECT TO CHANGE WITHOUT NOTICE.

WM8N type wide-angle indicating switchboard instruments

■ Description

WN8N-type meters are used in many industrial applications such as switchboards, supervisory panels, metal-clad switchgear and control desks. These are compact in size and easy to read. Scales have equal intervals and indicate through a 240° angle, a feature which distinguishes them from the conventional meters. Meters can be read at a distance, since instrument surfaces are protected by a non-reflecting glass and are not affected by reflections from room lighting . Ammeters are provided with an overload scale in red. These instruments comply with the requirements of JIS C1102 and are highly reliable. They can withstand a great deal of abuse in use because of their rugged construction.

■ Features

- High accuracy
  External magnetic fields cannot influence readings.
- Accuracy class: 1.5
- Easy-to-read long-scales and pointer-indications can easily be read from a distance.
- 110 × 110mm and 80 × 80mm front frame sizes.
- Auxiliary equipment such as shunt, impedance box and series resistor is available.

80mm square

110mm square

Meter	Description					110mm square Type	80mm square Type
AC ammeter	For direct connection					**WM8NAR3** (RMS responding)	**WM8NAR6** (RMS responding)
	Measuring range	Extended range type (0–X–3X)		Operating principle	Power consumption	**WM8NAS3** (Moving iron)	**WM8NAS6** (Moving iron)
	0 – 1A	0 – 1 – 3A		RMS responding	0.4VA		
	0 – 3A	0 – 3 – 9A					
	0 – 5A	0 – 5 – 15A					
	0 – 10A	0 – 10 – 30A					
	0 – 15A	0 – 15 – 45A		Moving iron	3VA		
	0 – 20A	0 – 20 – 60A					
	0 – 30A	–					
	For connection to CT						
	CT ratio	Measuring range	Extended type (0–X–3X)	Operating principle	Power consumption		
	5/5A	0 – 5A	0 – 5 – 15A	RMS responding	0.4VA		
	10/5A	0 – 10A	0 – 10 – 30A				
	15/5A	0 – 15A	0 – 15 – 45A				
	20/5A	0 – 20A	0 – 20 – 60A				
	30/5A	0 – 30A	0 – 30 – 90A	Moving iron	3VA		
	40/5A	0 – 40A	0 – 40 – 120A				
	50/5A	0 – 50A	0 – 50 – 150A				
	60/5A	0 – 60A	0 – 60 – 180A				
	75/5A	0 – 75A	0 – 75 – 225A				
	100/5A	0 – 100A	0 – 100 – 300A				
	150/5A	0 – 150A	0 – 150 – 450A				
	200/5A	0 – 200A	0 – 200 – 600A				
	300/5A	0 – 300A	0 – 300 – 900A				
	400/5A	0 – 400A	0 – 400 – 1200A				
	500/5A	0 – 500A	0 – 500 – 1500A				
	600/5A	0 – 600A	0 – 600 – 1800A				
	750/5A	0 – 750A	0 – 750 – 2250A				
	800/5A	0 – 800A	0 – 800 – 2400A				
	1000/5A	0 – 1000A	0 – 1000 – 3000A				
	1000/5A	0 – 1kA	0 – 1kA – 3kA				

■ Ordering information

Specify the following:
1. Type number (Ordering code)
2. Measuring range
3. Supply voltage and frequency
4. Connection (When connecting to VT or CT, specify VT ratio or CT ratio)

For further information, see page D1-4.

Switchboard Instruments
WM8N type

Meter	Description			110mm square Type (Ordering code)	80mm square Type (Ordering code)
AC voltmeter	For direct connection Measuring range 0 – 50V 0 – 100V 0 – 150V 0 – 300V 0 – 600V	Operating principle RMS responding Moving iron	Power consumption 50V: 0.1VA 100V: 0.6VA 150V: 0.9VA 300V: 1.8VA 600V: 1.2VA 8VA	**WM8NVR3** (RMS responding) **WM8NVS3** (Moving iron)	**WM8NVR6** (RMS responding) **WM8NVS6** (Moving iron)
	For connection to VT VT ratio / Measuring range 440/110V / 0 – 600V 3300/110V / 0 – 4.5kV 6600/110V / 0 – 9kV 6600/110V / 0 – 9000V VT ratio: Y/110 (Y: VT primary voltage)	Operating principle RMS responding Moving iron	Power consumption 0.9VA 8VA		
DC ammeter	For direct connection Measuring range 0 –1mA / 0 – 1A 0 – 3mA / 0 – 5A 0 – 5mA / 0 – 10A 0 – 10mA / 0 – 15A 0 – 30mA / 0 – 30A 0 – 50mA 0 – 100mA	Operating principle: Moving coil type Internal resistance: 1mA: Approx. 185 3mA: Approx. 17 5mA: Approx. 10 10mA and above: Approx. 50mV		**WM8NAM3** (Moving coil)	**WM8NAM6** (Moving coil)
	For connection to shunt Measuring range 0 – 50A / 0 – 200A 0 – 75A / 0 – 250A 0 – 100A / 0 – 500A 0 – 150A	Operating principle: Moving coil type Shunt ratings: 60mV			
DC voltmeter	For direct connection Measuring range 0 – 10V / 0 – 200V 0 – 30V / 0 – 300V 0 – 50V / 0 – 500V 0 – 100V / 0 – 600V 0 – 150V	Operating principle: Moving coil type Series resister: Internal Internal resistance: 10V: 10k 30V: 30k 50V: 50k 100V: 100k 150V: 150k 200V: 200k 300V: 300k 500V: 500k 600V: 600k		**WM8NVM3** (Moving coil)	**WM8NVM6** ((Moving coil))
	For connection to series resistor Measuring range 0 – 750V 0 – 1kV 0 – 1.5kV 0 – 2kV	Operating principle: Moving coil type Series resister: External Power consumption: 1mA			

■ Ordering information

Specify the following:
1. Type number (Ordering code)
2. Measuring range
3. Supply voltage and frequency
4. Connection (When connecting to VT or CT, specify VT ratio or CT ratio)

For further information, see page D1-4.

Meter	Description		110mm square Type	80mm square Type
Frequency meter	Measuring range 45 – 55Hz 110V 55 – 65Hz 110V 45 – 55Hz 220V 55 – 65Hz 220V	Operating principle: Frequency/DC transducing type Power consumption: 1.5VA at 110V 1.5VA at 220V	**WM8NP13**	**WM8NP16**
Single-phase 2-wire wattmeter	For connection to VT and CT Measuring range 0 – ZkW $Z = 0.5 \times \frac{X}{5} \times \frac{Y}{110}$ Z: kWatt X: CT primary current Y: VT primary voltage	Operating principle: Power/DC transducing type Power consumption (WM8NC03) Current coil: 1VA (at 5A) Voltage coil: 2VA (at 110V) Power consumption (WM8NC06) Current coil: 0.5VA (at 5A) Voltage coil: 1.7VA (at 110V)	**WM8NC03**	**WM8NC06**
3-phase 3-wire wattmeter	For connection to VT and CT Measuring range 0 – ZkW $Z = \frac{X}{5} \times \frac{Y}{110}$ Z: kWatt X: CT primary current Y: VT primary voltage	Operating principle: Power/DC transducing type Power consumption Current coil: 0.5VA per element (at 5A) Voltage coil: 1.7VA per element (at 110V)	**WM8NC23**	**WM8NC26**
3-phase 4-wire wattmeter	For connection to VT and CT Measuring range 0 – ZkW $Z = \frac{X}{5} \times \frac{Y}{110}$ Z: kWatt X: CT primary current Y: VT primary voltage	Operating principle: Power/DC transducing type Power consumption Current coil: 0.5VA per element (at 5A) Voltage coil: 0.8VA per element (at 110V)	**WM8NC33**	**WM8NC36**
3-phase 3-wire varmeter	For connection to VT and CT Measuring range 0 – Zkvar $Z = \frac{X}{5} \times \frac{Y}{110}$ Z: kvar X: CT primary current Y: VT primary voltage	Operating principle: Reactive power/DC transducing type Power consumption Current coil: 0.5VA per element (at 5A) Voltage coil: 1.7VA per element (at 110V)	**WM8NV23**	**WM8NV26**
3-phase 4-wire varmeter	For connection to VT and CT Measuring range 0 – Zkvar $Z = \frac{X}{5} \times \frac{Y}{110}$ Z: kvar X: CT primary current Y: VT primary voltage	Operating principle: Reactive power/DC transducing type Power consumption Current coil: 0.5VA per element (at 5A) Voltage coil: 1.7VA per element (at 110V)	**WM8NV33**	**WM8NV36**
3-phase 3-wire power factor meter (for balanced circuit)	For connection to VT and CT VT ratio: $= \frac{Y}{110}$ V CT ratio: $= \frac{X}{5}$ A	Operating principle: Phase angle/DC transducing type Power consumption Current coil: 0.9VA (at 5A) Voltage coil: 0.6VA per phase (at 110V)	**WM8NA13**	**WM8NA16**
3-phase 3-wire power factor meter (for unbalanced circuit)	For connection to VT and CT VT ratio: $= \frac{Y}{110}$ V CT ratio: $= \frac{X}{5}$ A	Operating principle: Phase angle/DC transducing type Power consumption Current coil: 1.1VA per phase (at 5A) Voltage coil: 1.9VA per phase (at 110V)	**WM8NA23**	**WM8NA26**
3-phase 4-wire power factor meter (for unbalanced circuit)	For connection to VT and CT VT ratio: $= \frac{Y}{110}$ V CT ratio: $= \frac{X}{5}$ A	Operating principle: Phase angle/DC transducing type Power consumption Current coil: 1.1VA per phase (at 5A) Voltage coil: 0.8VA per phase (at 110V)	**WM8NA43**	**WM8NA46**

Switchboard Instruments
WM8N type

■ Type number nomenclature

WM8N AR 3 - ALS 5YYY A Y

Basic type

Category
AR : AC ammeter (including reception indicator)
AS : AC ammeter (moving iron type only)
VR : AC voltmeter (including reception indicator)
VS : AC voltmeter (moving iron type only)
AM : DC ammeter (moving coil type only)
VM : DC voltmeter (moving coil type only)
C0 : Single-phase, 2-wire wattmeter
C1 : Single-phase, 3-wire wattmeter
C2 : 3-phase, 3-wire wattmeter
C3 : 3-phase, 4-wire wattmeter
A0 : Single-phase, 2-wire power factor meter
A1 : 3-phase power factor meter for balanced circuit
A2 : 3-phase power factor meter for unbalanced circuit
A4 : 3-phase, 4-wire power factor meter for unbalanced circuit
P1 : Frequency meter
V1 : Single-phase, 2-wire varmeter
V2 : 3-phase, 3-wire varmeter
V3 : 3-phase, 4-wire varmeter
AT : 3-phase, 3-wire current power factor meter
CT : 3-phase, 3-wire current power varmeter

Dimensions
3 : 110 x 110mm
6 : 80 x 80mm

Additional specifications
Y : None (standard specification)
R : Setting pointer equipped (red)
Z : The following additional specifications (Specify the content.)

[Additional specifications]
Single scale/double printing, double scale/double printing color line, color band, colored characters, meter installation orientation processing for transit through tropical areas

Scale unit

1 : %	D : mA	R : t/h
2 : m	E : kA	S : MW
3 : mm	F : m^3/s	T : kV
4 : m^3/h	G : min^{-1}	U : mV
5 : Nm^3/h	H : Hz	V : V
6 : ppm	J : Mvar	W : mg/l
7 : rpm	K : kvar	X : kW
8 : °C	L : var	Y : x 1/3 kV
9 : l/h	M : MPa	Z : Not given above. (Be sure to specify.)
A : A	N : kPa	
B : μA	P : Pa	
C : cosφ	Q : pH	

Rated Input

●AC ammeter (AC) *1
For direct connection
Standard ALA : 0 to 1A
ALJ : 0 to 3A
ALS : 0 to 5A
AMT : 0 to 10A
AND : 0 to 15A
ANG : 0 to 20A
ANL : 0 to 30A
2 times A2Z : Order production
3 times A32 : 0 to 1A times 3
A34 : 0 to 3A times 3
A35 : 0 to 5A times 3
A36 : 0 to 10A times 3
A37 : 0 to 15A times 3
A38 : 0 to 20A times 3
A39 : 0 to 30A times 3 (moving iron type only)
5 times A52 : 0 to 1A times 5
A55 : 0 to 5A times 5

For CT connection
Standard A41 : □A/1A
A42 : □A/5A
2 times A43 : □A/1A times 2
A44 : □A/5A times 2
3 times A45 : □A/1A times 3
A46 : □A/5A times 3
5 times A47 : □A/1A times 5
A48 : □A/5A times 5
Special ZZZ : 0 to 100mA min. to 0 to 30A max. (Be sure to specify the input value.)

●AC voltmeter (AC) *1
For direct connection
VNT : 0 to 50V
VPK : 0 to 100V
VPZ : 0 to 150V
VRX : 0 to 300V
VSJ : 0 to 600V
For VT connection
V12 : 0 to 150V
V13 : 0 to 150/√3V
Special
ZZZ : 0 to 50V min. to 0 to 600V max. (Be sure to specify the input value.)

●Frequency meter
Standard H10 : 110V 45 to 55Hz
H11 : 110V 55 to 65Hz
H12 : 110V 45 to 65Hz
H20 : 220V 45 to 55Hz
H21 : 220V 55 to 65Hz
H22 : 220V 45 to 65Hz
Special ZZZ : Specifications not given above. (Be sure to specify the input value.)

●Wattmeter, varmeter, and power factor meter *1*2*4
Standard D13 : 110V/1A
D14 : 110V/5A
D15 : 220V/1A
D16 : 220V/5A
D20 : 110 to 220V/5A
Special ZZZ : Specifications not given above. (Be sure to specify the input value.)

●DC ammeter (DC)
Standard AFA : 0 to 1mA
AFN : 0 to 3mA
AFX : 0 to 5mA
AGZ : 0 to 10mA
AHM : 0 to 30mA
AHY : 0 to 50mA
AJR : 0 to 100mA
AKG : 0 to 300mA
AKM : 0 to 500mA
ALA : 0 to 1A
ALC : 0 to 1.5A
ALE : 0 to 2A
ALJ : 0 to 3A
ALS : 0 to 5A
AMT : 0 to 10A
AND : 0 to 15A
ANG : 0 to 20A
ANL : 0 to 30A
A04 : 0 to 60mV (for shunt)
A05 : 0 to 100mV (for shunt)
AHE : 4 to 20mA
AHH : 4 to 25.3mA
DEM : ±500μA
D04 : ±60mV (for shunt)
D08 : 0 to 100mV (for shunt, with VR)
Special
ZZZ : Be sure to specify an input value in the range of 0 to 300μA min. to 0 to 1A max.

●DC voltmeter (DC)
Standard VLA : 0 to 1V
VLJ : 0 to 3V
VLS : 0 to 5V
VMT : 0 to 10V
VNL : 0 to 30V
VNT : 0 to 50V
VPB : 0 to 75V
VPK : 0 to 100V
VPZ : 0 to 150V
VRL : 0 to 200V
VRX : 0 to 300V
VSF : 0 to 500V
VSJ : 0 to 600V
VLR : 1 to 5V
V01 : For connection to external series resistor
Special
ZZZ : 0 to 50mV min. to 0 to 600V max. (Be sure to specify the input value.)

*4 The rated voltage for the 3-phase, 4-wire type is the voltage between wires.

Scale numbers
□□□□ :
Specify the scale numbers with four digits. Enter the specification from the left, and enter "Y" for any remaining digits.Enter "R" for a decimal point. If the scale unit is factored, specify the following at the end: S for x1000, H for x100, or T for x10.

Example 1 : 500V → Specify "500Y".
Example 2 : 5V → Specify "5YYY".
Example 3 : 5.5V → Specify "5R5Y".
Example 4 : 5kV → Specify "5YYY".
Example 5 : 5000V → Specify "5000".
Example 6 : 1000ppm → Specify "1000".
Example 7 : 1 x 1000ppm → Specify "1YYS".
Example 8 : 4.7 x 100ppm → Specify "4R7H".
Example 9 : 4.7 x 10ppm → Specify "4R7T".
Example 10 : ± scale → Specify "ZZZZ" and specify the scale.For an extended scale, specify the effective scale range (standard scale portion).
Example 11 : 10/5A times 3 extension → Specify "10YY".

CS05 : Power factor meter 0.5 - 1 - 0.5
CST0 : Current power factor meter 0 - 1 - 0 - 1 - 0
HZYY : Frequency meter
01ML *3 : 0 - 1 - 0 (power factor linear scale)
01MN *3 : 0 - 1 - 0 (phase angle linear scale)
05ML *3 : 0.5 - 1 - 0.5 (power factor linear scale)
05MN *3 : 0.5 - 1 - 0.5 (phase angle linear scale)
ZZZZ : Specifications not given above. (Be sure to specify the scale.)

*3 Power factor display for DC ammeter and voltmeter (reception indicator).

*1 If a CT or VT is used, be sure to specify the CT ratio or VT ratio.(If a power factor meter is used, the CT ratio or VT ratio does not have to be specified.) Also, if a power factor meter for an unbalanced circuit is used, be sure to specify the rated frequency.

*2 Table of rated voltages
○: Can be produced, —: Cannot be produced.

Category	Voltage between wires: 100V	110 to 220V 105 to 210V 100 to 200V	Voltage between wires: 220V
Single-phase, 2-wire wattmeter/ power factor meter	○	—	○
Single-phase, 3-wire wattmeter	—	○	—
3-phase, 3-wire wattmeter	○	—	○
3-phase, 4-wire wattmeter	○	—	○
3-phase power factor meter for balanced circuit	○	—	○
3-phase power factor meter for unbalanced circuit	○	—	○
3-phase, 4-wire power factor meter	○	—	○
Single-phase, 2-wire varmeter	○	—	○
3-phase, 3-wire varmeter	○	—	○
3-phase, 4-wire varmeter	○	—	○

■Dimensions, mm

WM8NAS3, WM8NVS3, WM8NAR3, WM8NVR3, WM8NAM3, WM8NVM3, WM8NA13, WM8NP13, WM8NAT3

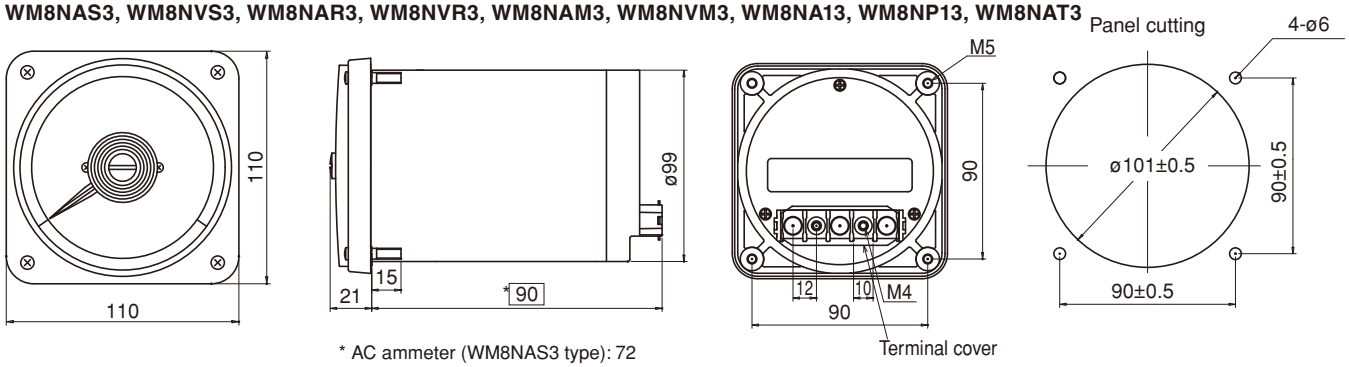

* AC ammeter (WM8NAS3 type): 72
AC voltmeter (WM8NVS3 type): 99

WM8NC03, WM8NC13, WM8NC23, WM8NC33, WM8NV23, WM8NV33, WM8NA23, WM8NA43

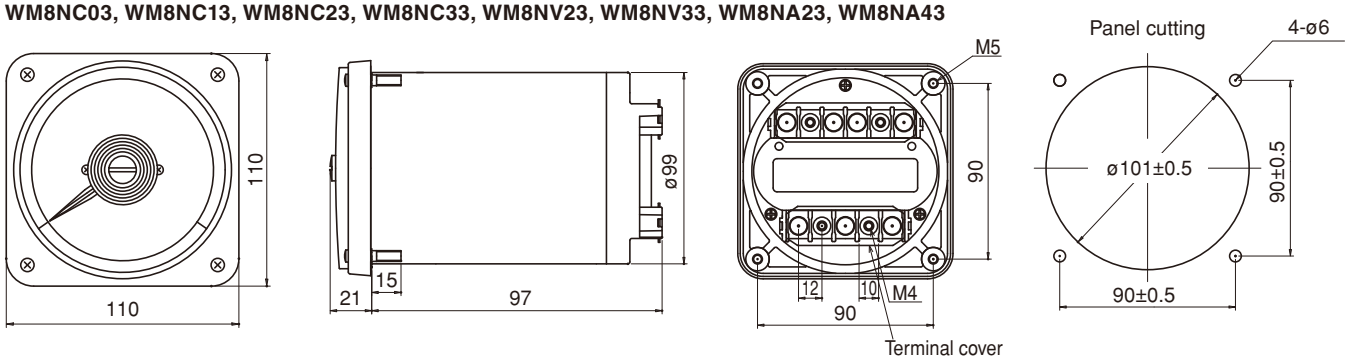

WM8N□6

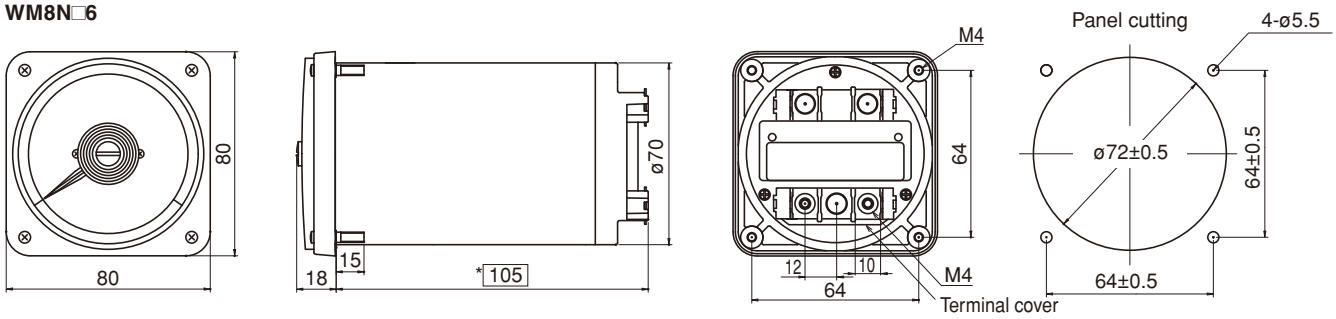

* AC ammeter (WM8NAS6): 72.5
AC voltmeter (WM8NVS6): 72.5

• DC converter for WM8N□6

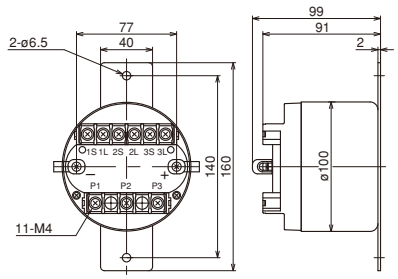

• Series resistor

DM-1

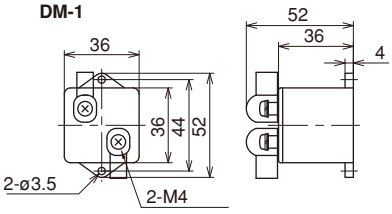

DM-2

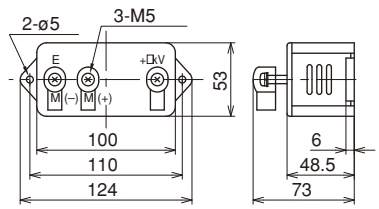

DM-5 to 25

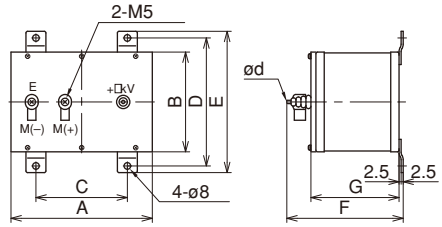

Type	Rating	A	B	C	D	E	F	G	d	Mass (kg)
DM-5	2.5 to 5kV	170	120	110	154	170	140	106	4	1.0 or less
DM-10	6 to 10kV	220	160	140	194	210	140	106	4	1.5 or less
DM-15	12 to 15kV	290	210	200	248	264	190	146	5	2.0 or less
DM-20	20kV	390	260	300	294	310	220	176	5	3.0 or less
DM-25	25kV	500	330	400	356	372	280	236	5	3.5 or less

Switchboard Instruments
WM8N type

■ Wiring diagrams

AC ammeter

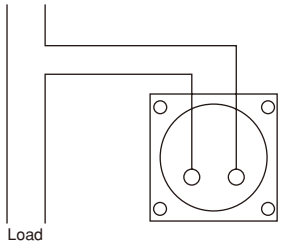

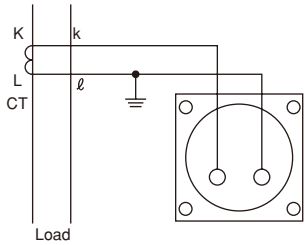

For connection CT

AC voltmeter

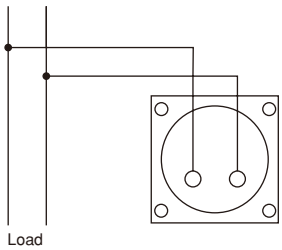

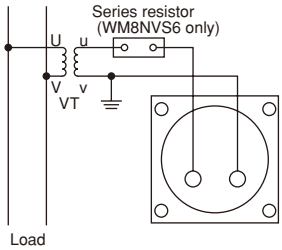

For connection VT

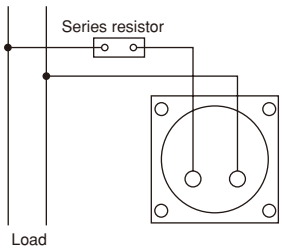

For connection WM8NVS6 type

DC ammeter

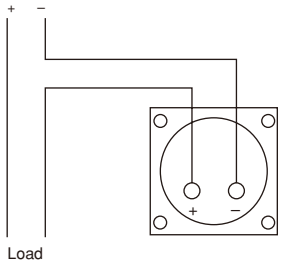

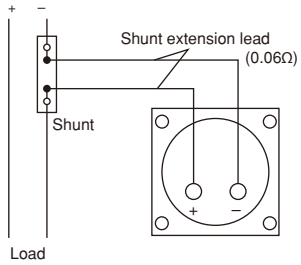

For connection shunt

DC voltmeter

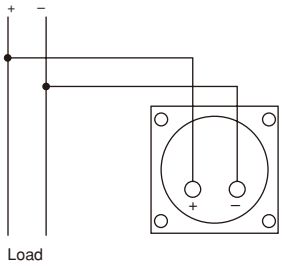

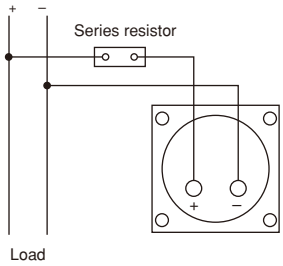

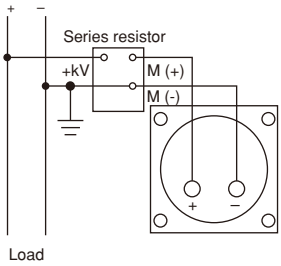

Frequency meter

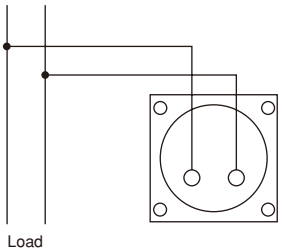

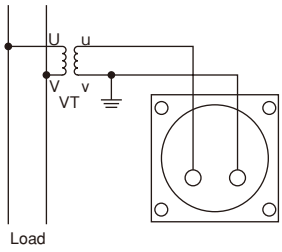

Wattmeter: WM8NC06
Varmerter: WM8NV16

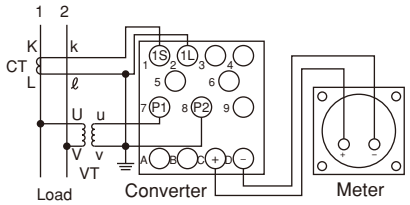

Wattmeter: WM8NC16

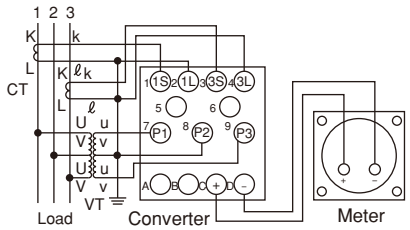

Wattmeter: WM8NC26
Varmerter: WM8NV26

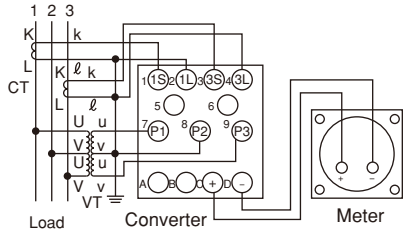

Wattmeter: WM8NC36

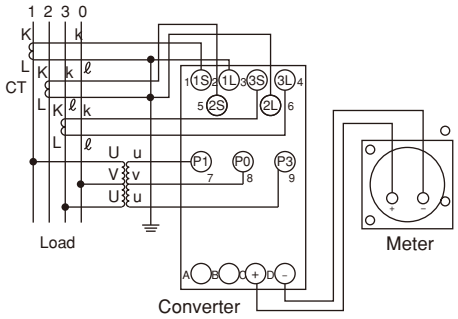

Wattmeter: WM8NC03
Varmerter: WM8NV13

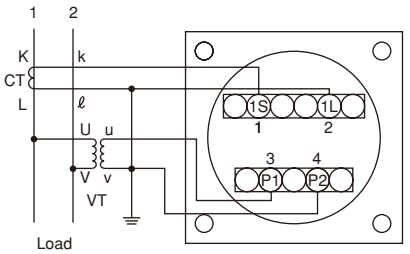

Wattmeter: WM8NC13

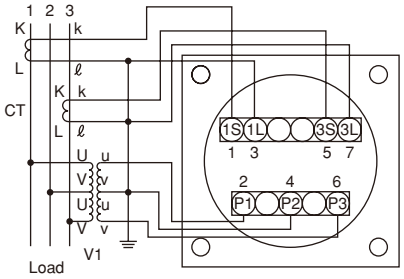

Wattmeter: WM8NC23
Varmerter: WM8NV23

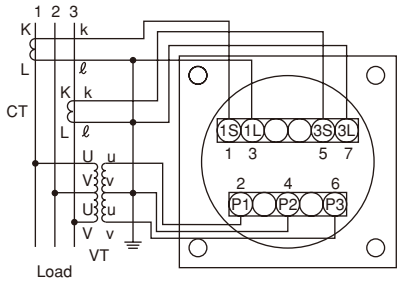

Wattmeter: WM8NC33

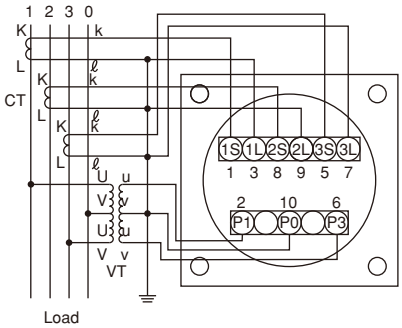

Varmerter: WM8NV36

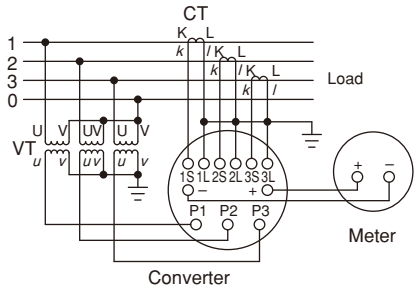

Wattmeter: WM8NV33

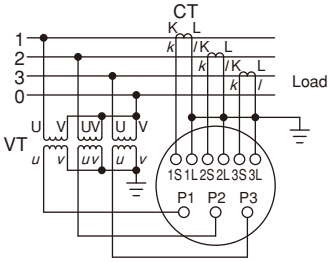

D1

Switchboard Instruments
WM8N type

Power foctor meter: WM8NA06, 03

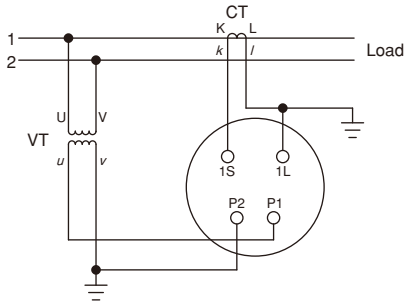

Power foctor meter: WM8NA16, 13

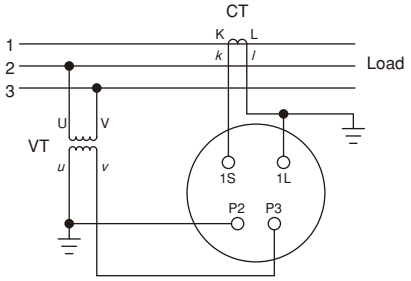

Power foctor meter: WM8NA26

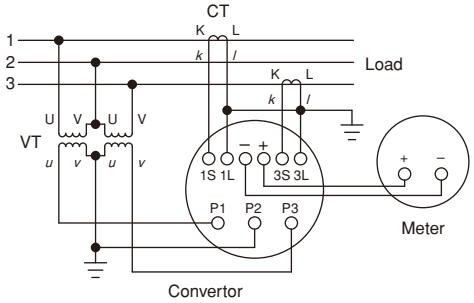

Power foctor meter: WM8NA23

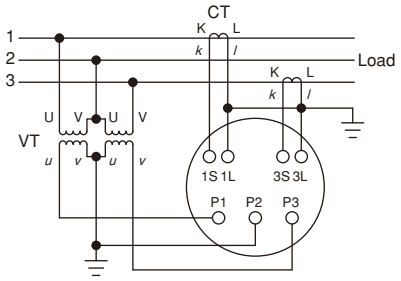

Power foctor meter: WM8NA46

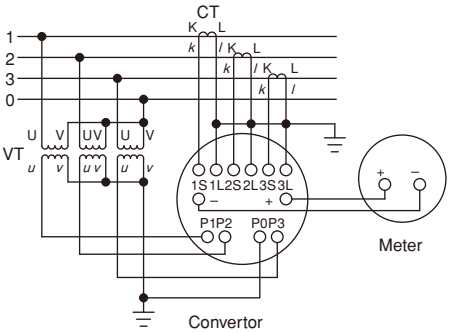

Power foctor meter: WM8NA43

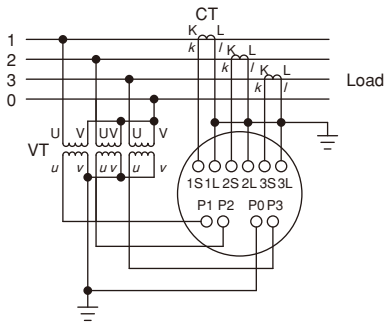

Shunt WM9N-1, -2

Features

- Shunt for DC ammeter. Class 0.5 and class 1.0 models are available. Select the model based on the required accuracy.
- Keep in mind that a shunt is a source of heat generation, and select a shunt with a current value with sufficient margin. (As a general rule, select a shunt with approximately 1.5 times the continuous operating current.)
- The standard terminal voltage for the shunt is 60mV, but models with voltage of 100 mV can also be produced.

Shunt (with base) (AF96-423) **Shunt (no base)** (AF96-423) **Shunt (no base)** (AF96-423)

Functions and specifications

Item	Applicable meter	Class 0.5			Class 1.0		
		Shunt rating	Shunt base / no base	Type	Shunt rating	Shunt base / no base	Type
Shunt	DC shunt	60mV 1A	With base	WM9N-1	60mV 1A	With base	WM9N-2
	Shunt connection items	2A			2A		
		3A			3A		
		4A			4A		
		5A			5A		
		7.5A			7.5A		
		10A			10A		
		15A			15A		
		20A			20A		
		30A			30A		
		40A			40A		
		50A			50A		
		60A			60A		
		75A			75A		
		100A			100A		
		150A			150A		
		200A			200A		
		250A	No base		250A	No base	
		300A			300A		
		400A			400A		
		500A			500A		
		600A			600A		

Note 1: Only one meter and can be connected to each shunt.

Dimensions, mm

- 1 to 4A (with base)

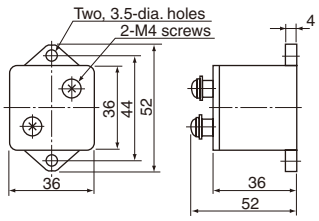

- 5 to 50A (with base)

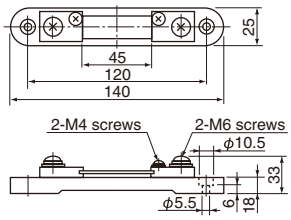

- 60 to 200A (with base)

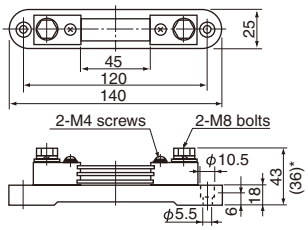

* ( ) 60 to 100A

- 250 to 600A (no base)

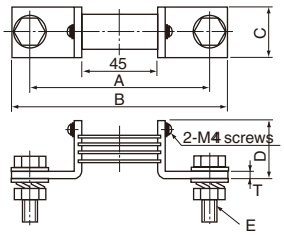

Connection wires

Use a round-trip resistance of 0.06Ω for the shunt connection conductors.
The same applies for class 1.0 models without connection wires.

One-way length (m)	2	3	5.5	9	12.5	22	35
Cross-section area (mm^2)	1.25	2	3.5	5.5	8	14	22

- Dimensions, mm

Current	A	B	C	D	E	T
250A•300A	110	130	30	36	M10x30	4
400A	110	140	40	36	M12x35	5
500A•600A	120	160	40	41	M12x35	6

Switchboard Instruments
Super Multi-meter WE1MA type

WE1MA power line multi-meters

■ Description

53 elements and 213 points can be measured and monitored with a Single-phase/2-wire, Single-phase/3-wire, 3-phase/3-wire, and 3-phase/4-wire.

■ Features

- With one unit, you can measure or monitor the voltage, current, demand current, power, demand power, reactive power, apparent power, power factor, frequency, leakage current, harmonic effective value (A,V), distortion, harmonic content rate, power level, and reactive power level.
- The unit supports 3-phase/3-wire, Single-phase/3-wire, and Single-phase/2-wire and switching to 3-phase/4-wire is supported with 2VT, 3CT/3VT, or 3CT settings.
- The measurements are displayed using a four-element display: one display on the main monitor and three displays on the sub-monitors along with a bar graph.
- Measure and output alarms for leakage current.

WE1MA

- Outputs include four analog circuits, a pulse output, an alarm output, a CPU error output, and a communications output (according to specification).
- Communications output supports F-MPC Net, RS-485, CC-Link, Modbus RTU and AnyWire (according to user specification).

■ Types and ratings

Measurement	Input specifications		Type
	Input circuits	Input range	
Current (max. demand, demand, instantaneous), power (max. demand, demand, instantaneous), voltage, power factor, frequency, reactive power, power level, reactive power level, harmonic effective value, distortion, and harmonic content rate	Single-phase/2-wire, Single-phase/3-wire, 3-phase/3-wire or all common	150, 300V common use, 5A	**WE1MA-□□F□□-000**
		150V, 5A	**WE1MA-□□1□□-000**
		300V, 5A	**WE1MA-□□3□□-000**
		5A	**WE1MA-□□5□□-000**
		150V	**WE1MA-□□9□□-000**
		300V	**WE1MA-□□A□□-000**
		150, 300V common use, 1A	**WE1MA-□□G□□-000**
		150V, 1A	**WE1MA-□□2□□-000**
		300V, 1A	**WE1MA-□□4□□-000**
		1A	**WE1MA-□□6□□-000**
Current (max. demand, demand, instantaneous), power (max. demand, demand, instantaneous), voltage, power factor, frequency, reactive power, power level, reactive power level, harmonic effective value, distortion, harmonic content rate, and leakage current	Single-phase/2-wire + leakage current, Single-phase/3-wire + leakage current 3-phase/3-wire+leakege current or all common	150, 300V common use, 5A	**WE1MA-□□F□□-000**
		150V, 5A	**WE1MA-□□1□□-000**
		300V, 5A	**WE1MA-□□3□□-000**
		5A	**WE1MA-□□5□□-000**
		150V	**WE1MA-□□9□□-000**
		300V	**WE1MA-□□A□□-000**
		150, 300V common use, 1A	**WE1MA-□□G□□-000**
		150V, 1A	**WE1MA-□□2□□-000**
		300V, 1A	**WE1MA-□□4□□-000**
		1A	**WE1MA-□□6□□-000**
		Type given above and ZCT50A	
		Type given above and ZCT100A	
		Type given above and ZCT200A	
		Type given above and ZCT400A	
		Type given above and ZCT600A	
		Type given above and ZCT100A (outdoor)	
Current (max. demand, demand, instantaneous), power (max. demand, demand, instantaneous), voltage, power factor, frequency, reactive power, apparent power, power level, reactive power level, harmonic effective value, distortion, and harmonic content rate	3-phase, 4-wire	150/√3V or 300/√3V common use, 5A	**WE1MA-□4F□□-000**
		150/√3V, 5A	**WE1MA-□41□□-000**
		300/√3V, 5A	**WE1MA-□43□□-000**
		5A	**WE1MA-□45□□-000**
		150/√3V	**WE1MA-□49□□-000**
		300/√3V	**WE1MA-□4A□□-000**
		150/√3V or 300/√3V common use, 1A	**WE1MA-□4G□□-000**
		150/√3V, 1A	**WE1MA-□42□□-000**
		300/√3V, 1A	**WE1MA-□44□□-000**
		1A	**WE1MA-□46□□-000**
		440/√3V, 5A	**WE1MA-□4B□□-000**
		440/√3V, 1A	**WE1MA-□4C□□-000**

■ Type number nomenclature

WE1MA - □ □ □ □ □ - □ □ □ / □□

(1) Basic type

(2) Hard model

E	English spec.	Phase indication R-Y-B-W
F	English spec.	Phase indication U-V-W-N
G	English spec.	Phase indication L1-L2-L3-N

(3) Input circuit

F	1ϕ 2W 1ϕ 3W 3ϕ 3W common use
1	1ϕ 2W
2	1ϕ 3W
3	3ϕ 3W
G	1ϕ 2W 1ϕ 3W 3ϕ 3W common use + electric leakage
5	1ϕ 2W + electric leakage
6	1ϕ 3W + electric leakage
7	3ϕ 3W + electric leakage
4	3ϕ 4W

(4) Input range

F	150 V, 300 V common use, 5 A
1	150 V, 5 A
3	300 V, 5 A
5	5 A
9	150 V
A	300 V
G	150 V, 300 V common use, 1 A
2	150 V, 1 A
4	300 V, 1 A
6	1 A
7	5 A (3ϕ 3W, CT)
8	1 A (3ϕ 3W, CT)
P	150 V, 5 A (3ϕ 3W, 2VT, 3CT)
Q	150 V, 1 A (3ϕ 3W, 2VT, 3CT)
R	300 V, 5 A (3ϕ 3W, 2VT, 3CT)
S	300 V, 1 A (3ϕ 3W, 2VT, 3CT)
Three-phase four-wire system (3ϕ 4W)	
F	150/√3 V, 300/√3 V common use, 5 A
1	150/√3 V, 5 A
3	300/√3 V, 5 A
5	5 A
9	150/√3 V
A	300/√3 V
G	150/√3 V, 300/√3 V common use, 1 A
2	150/√3 V, 1 A
4	300/√3 V, 1 A
6	1 A
B	440/√3 V, 5 A
C	440/√3 V, 1 A
Z	Special specification (specified by customer)

(5) Auxiliary power

1	Used for 85 to 264 VAC and 80 to 143 VDC
2	20 to 56 VDC

(6) LCD viewing angle direction

1	Upper level mounting (looking up at meter)
2	Lower level mounting (looking down at meter)

(7) Analog output or communication output

0	None
Analog output 4 circuit	
1	4 to 20 mA DC
2	0 to 1 mA DC
3	1 to 5 VDC
4	0 to 5 VDC
5	0 to 10 VDC
Communication output	
F	F-MPC-net
A	RS-485
L	CC-Link
M	Modbus RTU
W	AnyWire

(8) Contact output

0	None
1	Pulse + warning
2	Warning x 2
3	Pulse x 2
4	Pulse + CPU error
5	Warning + CPU error

(9) External operation input

0	None
1	2 circuits

(10) International standard

No entry	None
/CE	CE marking compliance

*1 Select code [F] or [G] for (3), (4) (It is not necessary to select shaded codes unless there are special circumstances).
E.g.: Select [F] if (3) is [1], [2], or [3].
*2 CE marking compliant products (code: /CE) are not compatible with code: B, C, F, A, L, M, W.
*3 3P3W 2VT, 3CT cannot be combined with [F], [G].

Switchboard Instruments
Super Multi-meter WE1MA type

■ Specifications and performance

● Standard specifications and performance

Item	Specification							
Measurements	Measurement		Display error	Output error	Measurement		Display error	Output error
	Voltage (34 ranges)		±1.0%	±0.5%	nth harmonic effective value	Voltage, current	±1.5%	±1.5%
	Current (76 ranges)		±1.0%	±0.5%	nth harmonic content rate	Voltage	±1.0%	±2.5%
	Power		±1.0%	±0.5%		Current	±2.5%	±2.5%
	Reactive power		±1.0%	±0.5%	5th harmonic conversion effective value	Voltage, current	±1.5%	±1.5%
	Apparent power *1		±1.0%	±0.5%	5th harmonic conversion effective value	Voltage	±1.0%	±2.5%
	Power factor		±2.0%	±2.0%		Current	±2.5%	±2.5%
	Frequency		±0.5%	±0.5%	Power level	Power factor of 1	±2.0%	±2.0%
	Leakage current Io method, Igr method		±2.5%*2	±2.5%*2		Power factor of 0.5	±2.5%	±2.5%
					Reactive power level	Power factor of 1	±2.5%	±2.5%
	Fundamental wave effective value	Voltage	±1.5%	±1.5%	Reactive power level	Power factor of 0.87	±2.5%	±2.5%
		Current	±1.5%	±1.5%	*1 For 3-phase/4-wire only *2 Error for ZCT is not included. It is ± 0.0025A (ZCT primary) at a leakage current detection sensitivity current of 0.1A max.			
	Distortion	Voltage	±1.0%	±2.5%				
		Current	±2.5%	±2.5%				
Time limit setting	Demand current		0s, 5s, 10s, 20s, 30s, 40s, 50s, 1min, 2min, 3min, 4min, 5min, 6min, 7min, 8min, 9min, 10min, 15min, 20min, 25min, 30min (95% time limit)					
	Demand power							
	Harmonic measurement		Average time limit: 0min, 1min, 2min, 5min, 10min, 15min, 30min (average measurement)					
Bar graph error	±10% (% of span)							
Temperature effect	23±10°C permissible differential							
Conforming standards	JIS C 1102-1, -2, -3, -4, -5, -7(1997), JIS C 1111(1989), JIS C 1216(1995), JIS C 1263(1995), JIS C8374(1991), EIA standard RS-485							
Display refresh time	Approx. 1s (approx. 0.25s for a bar graph) (For current leakage measurement, the refresh time is 2s max. for the digital display and the bar graph and 10s for the digital display and the bar graph for harmonic measurement.)							
Display elements and composition	Liquid crystal display	Main monitor	Character height: 11mm, 5 digits					
		Sub-monitor on left	Character height: 6mm, 4 digits					
		Sub-monitor in center and on right	Character height: 6mm, 5 digits					
		Bar graph	20 dots					
LCD viewing angle	Standard item	Upper mounting (viewed from below): top: 10°, bottom: 60°, left/right: 60°						
	Special items	Lower mounting (viewed from above): top: 60°, bottom: 10°, left/right: 60°						
Backlight	LED backlight: White, always ON, automatically turns OFF (after 5min with no operation), can be set to always OFF.							
Auxiliary power supply	Power supply range and consumption VA	(1) 85 to 264 V AC 10VA (Rated voltage 100/110V AC, 200/220V AC) 80 to 143 V DC 6W (Rated voltage 100/110V DC) For both AC and DC (2) 20 to 56 V DC 6W (Rated voltage 24/48V DC)						
	Inrush current (time constant)	Rated voltage 110 V AC 2.2 A or less (about 3.6 ms)	Rated voltage 220 V AC 4.4 A or less (about 3.6 ms)					
		Rated voltage 110 V DC 1.6 A or less (about 3.6 ms)	Rated voltage 24 V DC 5.0 A or less (about 2.0 ms)					
		Rated voltage 48 V DC 9.9 A or less (about 2.0 ms)						
Input power consumption (VA)	Voltage circuit	0.2VA max.						
	Current circuit	0.1VA max. (5A, 1A)						
Overload resistance	Voltage circuit	2 x rated voltage for 10s, 1.2 x rated current for continuous						
	Current circuit	40 x rated voltage for 1s, 20 x rated current for 4s, 10 x for 16 s, 1.2 x rated current for continuous						
	Power supply power	1.5 x rated voltage for 10s, 1.2 x rated current for continuous, 1.5 x rated voltage for 10s at 110V DC, 1.3 x rated voltage for continuous at 110V DC						
Insulation resistance JIS C 1102-1 JIS C 1111	Between electrical circuits and external cabinet (ground)	50MΩ min. with 500V DC tester						
	Between inputs, outputs, and auxiliary power supply							
	Between outputs (analog, communication, pulse, or alarm)							
	Between pulse outputs							
	Between alarm outputs							
	Analog outputs (negative common) are not isolated.							
Withstand voltage JIS C 1102-1 JIS C 1111	Between electrical circuits and external cabinet (ground)	2000V AC (50/60Hz), 1min.						
	Between inputs, outputs, and auxiliary power supply							
	Between outputs (analog, communication, pulse, or alarm)	1500V AC (50/60Hz), 1min.						
	Between pulse outputs							
	Between alarm outputs							
	Analog outputs (negative common) are not isolated.							
Impulse withstand voltage JIS C 1111	Between auxiliary power supply and cabinet (ground) (only with leakage current measurement)	7kV, 1.2/50μs, positive and negative polarity, three times each						
	Between electrical circuits (except analog outputs and communications outputs) and cabinet (ground)	6kV, 1.2/50μs, positive and negative polarity, three times each						
	Between analog outputs or communications outputs and cabinet (ground)	5kV, 1.2/50μs, positive and negative polarity, three times each						

Item	Specification	
Noise immunity	ANSI C37.90a Electric power standard B-402 IEC801-2	(1) Oscillatory surge voltage Measurement error must be within 10% with no communication stoppage when repeatedly applying a damping oscillation waveform with a peak voltage of 2.5 to 3 kV at 1 to 1.5 MHz. Voltage input circuit (normal/common), current input circuit (common), power supply circuit (normal/common) (2) Measurement error must be within 10% with no communication stoppage when repeatedly applying a 1 μs square wave impulse noise and 100 ns wide noise for 5 minutes. Power supply circuit (common/normal) 1,500 V or higher — Alarm output (common) 1,000 V or higher Voltage input circuit (common/normal) 1,500 V or higher — Operation input (common) 1,000 V or higher Current input circuit (common) 1,500 V or higher — Analog output circuit (induction) 1,000 V or higher Pulse output (common) 1,000 V or higher (3) Measurement error must be within ±10% with no malfunction when intermittently irradiating radio wave noise in the 150, 400, and 900 MHz bands at 5 W/1 m and irradiating a mobile phone radio wave at 1 m. (4) Measurement error within 10% at electrostatic noise of 8 kV at energization time. There must be no damage at 10 kV when not energized. (Capacitor charging method)

Analog outputs		
	No. of outputs	4 circuits
	Output specifications	4 to 20mA DC (550Ω max.) 0 to 5V/1 to 5V DC (600Ω min.) 0 to 10V DC (2kΩmin.) 0 to 1mA DC (10kΩ max.) Specify any one of the above.
	Supported output elements	Voltage (RS-ST-TR), current (R-S-T), demand current (R-S-T), power, demand power, reactive power, apparent power, power factor, frequency, leakage current, distortion, fundamental wave effective value, 5th harmonic conversion content rate (automatic switching to maximum phase A or V), 5th harmonic conversion effective value, nth harmonic content rate, nth harmonic effective value (for phases A and V)
	Response time	1s max. (time until ±1% of the last steady value is reached), Harmonic measurement: 10s max., Current leakage measurement: 2s max.
	Output ripple	Maximum of 2 x inherent error (% of output span)
	Outputs are not isolated (negative common).	

Pulse output*4

Power level or reactive power level
Output method: Optical MOS-FET SPST-NO relay
Contact capacity: AC/DC 125V, 70mA (resistive load/inductive load)
Pulse width: 250±10ms (100 to 130ms depending on range setting and output pulse unit setting)
The output pulse unit can be set in the following ranges.
The output pulse unit will not change even if the measurement range is changed.
• 3-phase/3-wire, 3-phase/4-wire: Full load power (kW, kvar) = √3 x Rated voltage (V) x Rated current (A) x 10-3
• Single-phase/3-wire: Full load power (kW, kvar) = 2 x Rated voltage (V) x Rated current (A) x 10-3
• Single-phase: Full load power (kW, kvar) = Rated voltage (V) x Rated current (A) x 10-3

Full load power (kW, kvar)	Output pulse unit (kWh (kvarh)/pulse)				Multiplying factor
Less than 1	0.1	0.01	0.001	0.0001	0.01*3
1 min. to less than 10	1	0.1	0.01	0.001	0.1
10 min. to less than 100	10	1	0.1	0.01	1
100 min. to less than 1,000	100	10	1	0.1	10
1,000 min. to less than 10,000	1,000	100	10	1	100
10,000 min. to less than 100,000	10,000	1,000	100	10	1,000
100,000 min. to less than 1,000,000	100,000	10,000	1,000	100	10,000

Alarm output *4

Alarm elements: Set any of the following: demand current, demand power, leakage current, 5th harmonic conversion content rate, nth harmonic content rate, distortion, voltage, alarm OFF.
Reset method: Automatic reset or manual reset (setting)
Contact delay time: 0 to 300s (1s steps)
Output contacts: No-voltage NO (OR output of each phase)
Contact capacity: 250V AC 8A, 125V DC 0.3A (resistive load), 250V AC 2A, 125V DC 0.1A (inductive load)

Alarm elements	Item	Specification	
Demand current	Function	Alarm display and alarm output when demand measurement value ≥ upper-limit set value	
	Setting accuracy	±1.0% (% of full scale)	
	Setting range	5% to 100% of max. scale value (1% steps)	
Demand power	Setting accuracy	±1.0% (% of full scale)	
	Setting range	5% to 100% of max. scale value (1% steps)	
Leakage current (only with leakage current management)	Sensitive current	Greater than 50% to 100% of rated sensitive current	
	Rated sensitive current	0.03A/0.05A/0.1A/0.2A/0.4A/0.8A	
	Operation time	Time delay type (greater than 0.1s to 2s max.)	
	Test function	Detection of leakage current can be tested in test mode.	
5th harmonic conversion content rate nth harmonic content rate Distortion	Function	Alarm display and alarm output (detection at maximum phase) when measurement value ≥ Upper-limit set value	
	Setting accuracy	Current: ±2.5%, Voltage: ±1.0%, as percentage of content rate	
	Setting range	Current	5th harmonic conversion content rate, nth harmonic content rate (n = 3, 4, 5, 7, 9, 11, 13, or 15), distortion 5% to 100% (1% steps)
		Voltage	5th harmonic conversion content rate, nth harmonic content rate (n = 3, 4, 5, 7, 9, 11, 13, or 15), distortion 5% to 20% (0.1% steps)
	Detection characteristics	Average value mode: Detection when the average measurement value exceeds the setting given above Inverse time limit mode: Detection according to inverse time limit characteristics of instantaneous value (only for 5th harmonic conversion content rate)	
Voltage	Function	Alarm display and alarm output (detection for maximum phase) when measurement value ≥ upper-limit set value Alarm display and alarm output (detection for minimum phase) when measurement value ≥ lower-limit set value	
	Setting accuracy	±1.0% (with full scale as 150%)	
	Setting range	30% to 150% (1% steps) with full scale as 150%	

CPU error output *4	Detection item (self-diagnosis item), OR output of detection items		Contact configuration	Capacity
	(1) Watchdog timer (internal and external), (2) RAM check error, (3) A/D conversion error	OR output of detection items	NC contact	250V AC 5A, 125V DC 0.2A (resistive load), 250V AC 1.5A (inductive load)

*3 The multiplying factor is 0.01, but 0.1 is displayed for the multiplying factor.
(Four digits are displayed for the integer portion, and four digits are displayed below the decimal point for the expanded display.)
*4 A combination of two of the following outputs can be used: pulse output, alarm output, and CPU error output (only one CPU error output can be used).

Item	Specifications	
External operation input	Number of points	2 circuits, functions (4 types) changed in settings
	External reset	Warning outputs or maximum/minimum values can be reset by applying an external voltage signal Switching between the resetting of warning outputs or resetting of maximum/minimum values is specified in settings Input has same rating as auxiliary power
	External display switching	The display can be changed by applying an external voltage signal Measurement element switching and phase switching can be specified in settings Input has same rating as auxiliary power
	Min. operation pulse width, 300 ms continuous application possible (1) 100/110 VAC 0.4 VA, 200/220 VAC 1.4 VA, 100/110 VDC 0.4 W, uses both AC/DC Contact capacity: approx. 3 mA (100/110 VAC/DC), approx. 6 mA (200/220 VAC) (2) 24 VDC 0.3 W, 48 VDC 1.2 W Contact capacity: approx. 10 mA (24 VDC), approx. 20 mA (48 VDC)	
Vibration, shock JIS C 1102-1 JIS C 0040, 0041	Vibration: one-way amplitude of 0.15 mm, 10 to 55 Hz, 5 sweeps at 1 octave every minute Shock: 490 m/s^2 in X, Y, and Z directions, 3 times each	
Operating temperature and humidity range	-10 to +55°C, 30 to 85% RH, there should be no condensation	
Storage temperature range	-25 to 70°C	

● Communication specifications

RS-485 (protocol A)	EIA RS-485, half-duplex two wire system, start-stop synchronous system			
	Transmission speed	1200/2400/4800/9600/19200 bps	Stop bit	1 bit / 2 bits
	Transmission code	NRZ	Cable length	1000 m (total length)
	Start bit	1 bit	Address	1 to 254 (number of connected units, max. 31 units)
	Data length	7 bits / 8 bits	Transmission character	ASCII code
	Parity bit	NONE / ODD / EVEN		
Modbus RTU	EIA RS-485, half-duplex two wire system, start-stop synchronous system			
	Transmission speed	4800/9600/19200/38400 bps	Stop bit	1 bit / 2 bits
	Transmission code	NRZ	Transmission code	Binary
	Start bit	1 bit	Cable length	1000 m (total length)
	Data length	8 bits	Address	1 to 247 (number of connected units, max. 31 units)
	Parity bit	NONE / ODD / EVEN	Error detection	CRC-16($X^{16}+X^{15}+X^2+1$)
CC-LINK Ver.1.10	Transmission speed	156 K/625 K/2.5 M/5 M/10 Mbps	Number of connected units	42 units (if configured with this unit only)
	Number of occupied stations	Remote device station, 1 station occupied		
	Max. transmission distance	1200 M (156 kbps)/900 m (625 kbps)/400 m (2.5 Mbps)/160 m (5 Mbps)/100 (10 Mbps)		
F-MPC-Net	EIA RS-485, half-duplex two wire system, start-stop synchronous system			
	Transmission speed	4800 bps/9600 bps/19200 bps	Stop bit	1 bit
	Transmission code	NRZ	Transmission distance	1000 m (total length)
	Start bit	1 bit	Address	01 to 99 and Loc (not used)
	Data length	7 bits / 8 bits	Number of connected units	Max. 31 units / 1 system (incl. other devices)
	Parity bit	NONE / ODD / EVEN	Transmission character	ASCII
AnyWire	All quadruple/all double total frame, cyclic method			
	Synchronization method	Frame/bit method	Transmission cable	Cable free, general-purpose 2/4 wire cable (0.75 to 1.25 mm^2)
	Connection configuration	Bus method (multidrop method, T-branch method, tree method)	Transmission speed	All quadruple: 7.8 kHz (1 km), 15.6 kHz (500 m), 31.3 kHz (200 m), 62.5 kHz (100 m) All double: 7.8 kHz (1 km), 31.3 kHz (200 m) Value in parentheses ( ) is total length
	Protocol	AnyWireBus protocol		
	Error control	Double collation method	Address setting	0 to 63 (all quadruple), 0 to 15 (all double)
	RAS function	Transmission line disconnection position detection, transmission line short-circuit detection	Max. number of connected units	All quadruple: 64 units, all double: 16 units

■ Measurement range

● Voltage measurement range (34 ranges) *1, *2

150.0 V	(110 V)	1500 V	(1100 V)	18.00 kV	(13.2 kV)	180.0 kV	(132 kV)
150 V	(110 V)	2400 V	(1650 V)	18.00 kV	(13.8 kV)	210.0 kV	(154 kV)
300.0 V	(220 V)	3000 V	(2200 V)	24.00 kV	(16.5 kV)	270.0 kV	(187 kV)
300 V	(220 V)	3.00 kV	(2200 V)	25.00 kV	(18.4 kV)	300.0 kV	(220 kV)
500 V	(380 V)	4500 V	(3300 V)	30.0 kV	(22 kV)	400.0 kV	(275 kV)
600 V	(440 V)	4.50 kV	(3300 V)	45.0 kV	(33 kV)	500.0 kV	(380 kV)
600 V	(460 V)	9000 V	(6600 V)	90.0 kV	(66 kV)	750.0 kV	(550 kV)
600 V	(480 V)	9.00 kV	(6600 V)	120.0 kV	(77 kV)		
1200 V	(880 V)	15.00 kV	(11 kV)	150.0 kV	(110 kV)		

● Voltage measurement range (76 ranges) *3

5.00 A	20.00 A	80.0 A	250 A	1.00 kA	2.00 kA	6.00 kA	15.00 kA
6.00 A	20.0 A	100.0 A	300.0 A	1200 A	2500 A	7500 A	15.0 kA
7.50 A	25.00 A	100 A	300 A	1.20 kA	2.50 kA	7.50 kA	20.00 kA
8.00 A	25.0 A	120.0 A	400 A	1500 A	3000 A	8000 A	20.0 kA
10.00 A	30.00 A	120 A	500 A	1.50 kA	3.00 kA	8.00 kA	30.00 kA
10.0 A	30.0 A	150.0 A	600 A	1600 A	4000 A	9.00 kA	30.0 kA
12.00 A	40.0 A	150 A	750 A	1.60 kA	4.00 kA	10.00 kA	
12.0 A	50.0 A	200.0 A	800 A	1800 A	5000 A	10.0 kA	
15.00 A	60.0 A	200 A	900 A	1.80 kA	5.00 kA	12.00 kA	
15.0 A	75.0 A	250.0 A	1000 A	2000 A	6000 A	12.0 kA	

*1 The values outside parentheses ( ) are the bar graph full scale.
*2 The values inside parentheses are values corresponding to (/110 V) or (/220 V).
*3 Current display inherent sensitivity: Sets the current meter full scale. The setting range can be set in the 40 to 120% of CT ratio range.

● **Power (apparent power range)**
480 W to 1000 MW range selection, max. scale setting: 40 to 115%

● **Reactive power**
LEAD, LAG360 var to 1000 Mvar range selection, max. scale setting: 30 to 115%

● **Power factor**
LEAD 0.5 to 1 to LAG 0.5 or LEAD 0 to 1 to LAG 0 range selection

● **Frequency**
45 to 55 Hz, or 55 to 65 Hz, 45 to 65 Hz range selection

■ Name and function of each part

Bar graph display area
Main monitor measurement values can be displayed in analog format.
(Sub monitor measurement values can be set to display in bar graph format also.)

Digital display area
4 elements can be measured and monitored simultaneously.
- Main monitor
- Sub monitor (right)
- Sub monitor (center)
- Sub monitor (left)

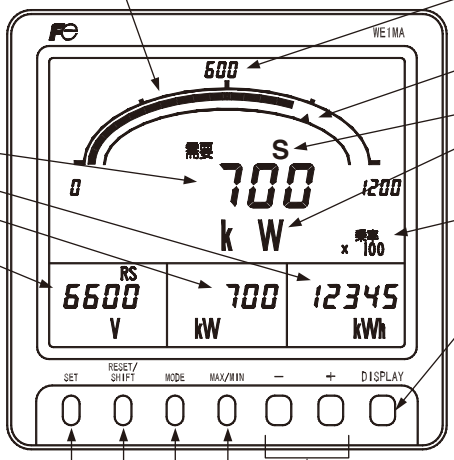

Scale value
This is set automatically in the measurement range settings.

Upper limit (or lower limit) setting index
Displays the upper limit (or lower limit) setting value.

Phase display

Unit display
This is set automatically in the measurement range settings.

Multiplying factor display
When displaying electric energy or reactive electric energy, the multiplying factor is displayed in the lower right of main monitor.

DISPLAY
This button is used to change the current (voltage) phase (line) display.
After changing the display, it will return to the original phase (line) display after 10 minutes of no operation.
In setting mode, this is used as a button to exit setting mode.

SET
This button is used to change the display of all electric energy cumulative values between the normal display (5 integer digits) and enlarged display (2 integer digits + up to 3rd decimal point).
After changing the display, it will return to the normal display after 10 minutes of no operation.
Furthermore, this button is used to change to setting mode. Hold down for 3 seconds or longer to change to setting mode.
In setting mode, this is used as a button for configuring the setting value.

- +
This button is used to change the main monitor measurement display element.
After changing the display, it will return to the original measurement display element after 10 minutes of no operation.
In setting mode, this is used as a button for changing setting values.

MAX/MIN
This button is used to change between the normal general measurement display and max., min. measurement display.

RESET/SHIFT
This button is used to reset all kinds of warning.
It can also be used to reset maximum and minimum values when in max., min. measurement display.
In setting mode, this is used as a button for moving setting items.

MODE
This button is used to change between the normal general measurement display and harmonics measurement display (voltage, current).
In setting mode, this is used as a button for changing the setting item.

■ External connection diagrams

● 1ϕ 2W, 1ϕ 3W, 3ϕ 3W *4

(1) 1ϕ 2W

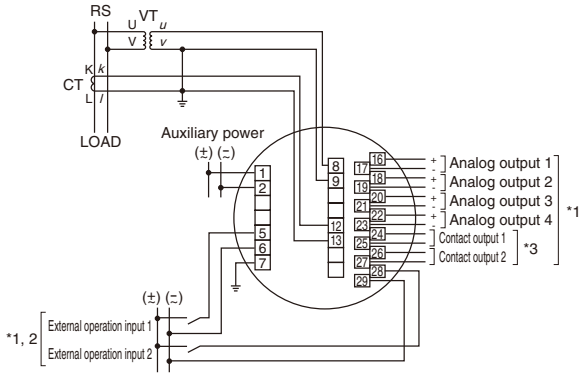

(2) 1ϕ3W

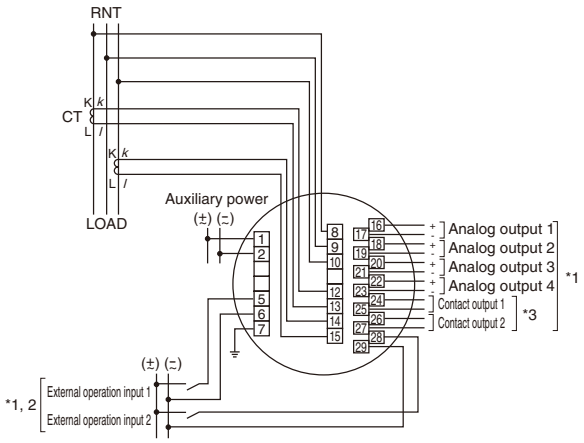

(3) 3ϕ 3W (2VT, 2CT)

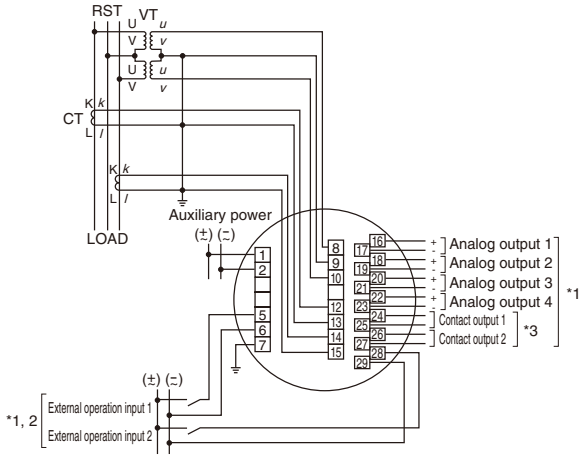

(4) 3ϕ 3W (2VT, 3CT)

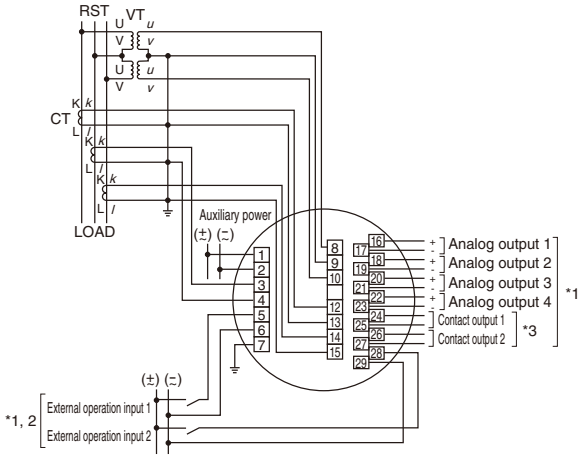

(5) Current input 3ϕ 3W (2CT)

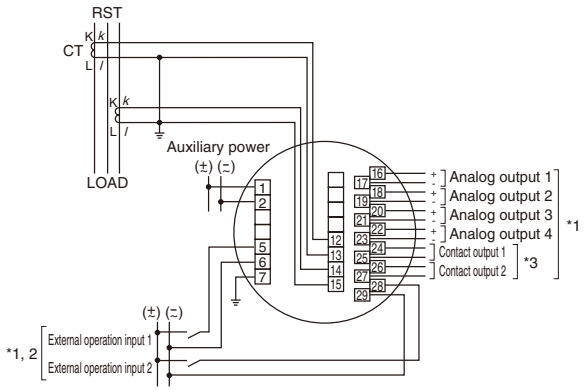

(6) Current input 3ϕ 3W (3CT)

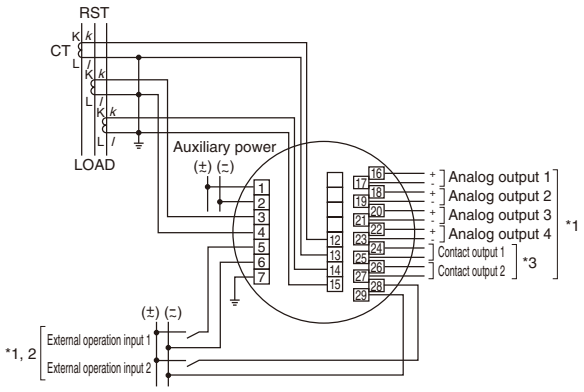

(7) Current input 1ϕ 3W

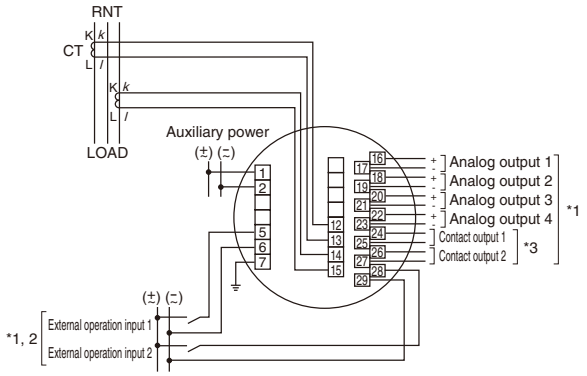

(8) Current input 1ϕ 2W

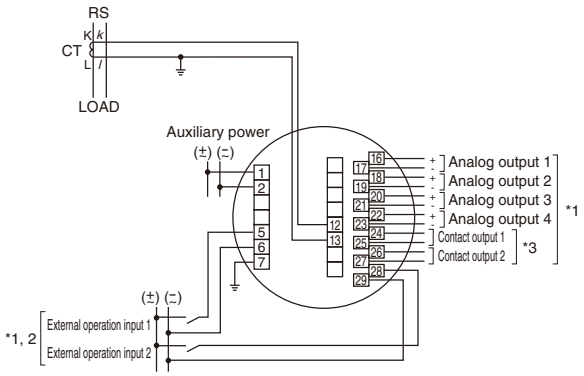

(9) Voltage input 3ϕ 3W

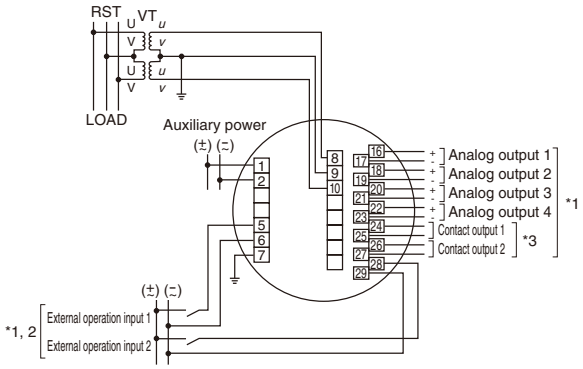

(10) Voltage input 1ϕ 3W

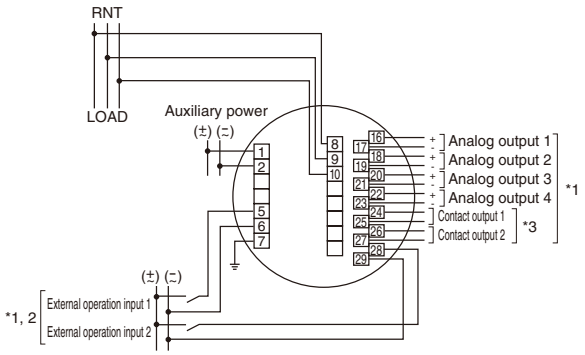

(11) Voltage input 1ϕ 2W

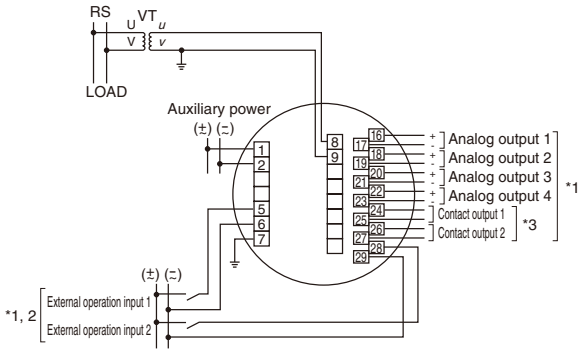

*1 Analog output, contact output, and external operation input are options.
*2 External operation input can be changed to an external reset function or external display switching function by specifying in the settings.
*3 Contact output can be selected from pulse output, warning output, and CPU error output. (specified by customer)
*4 VT, CT secondary side grounding is unnecessary for low-voltage circuits. Furthermore, VT is unnecessary if using with 110 V or 220 V direct input.

D1

● Wiring diagrams for monitoring electric leakage at low-voltage circuits *4

(1) Single-phase two-wire (1ϕ 2W) (N phase grounding)

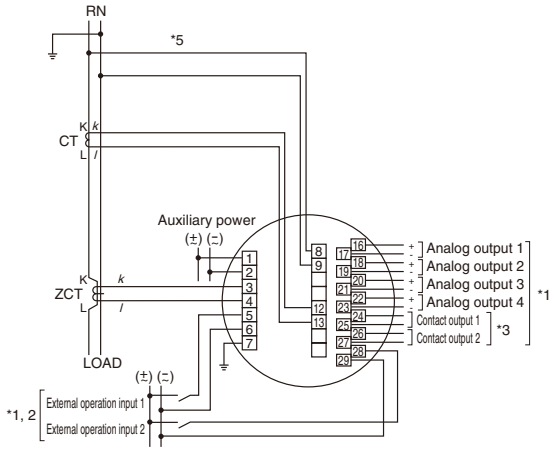

(2) Single-phase three-wire (1ϕ 3W) (N phase grounding)

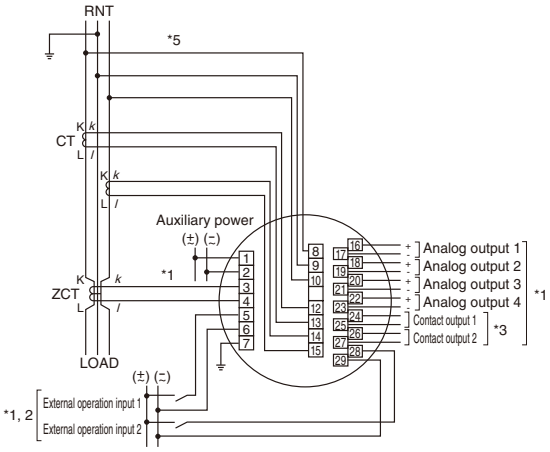

(3) Three-phase three-wire (3ϕ 3W) (S phase grounding)

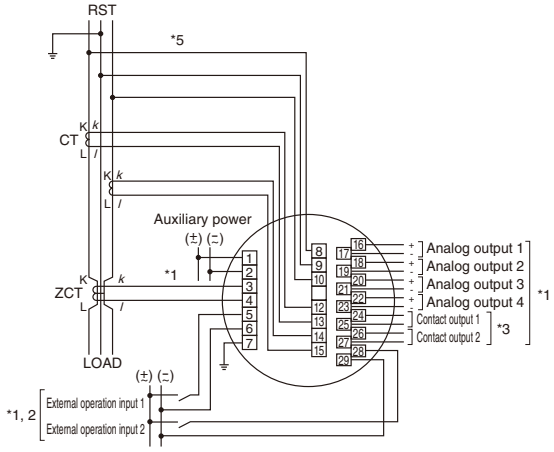

(4) Three-phase three-wire (3ϕ 3W) (no grounding)

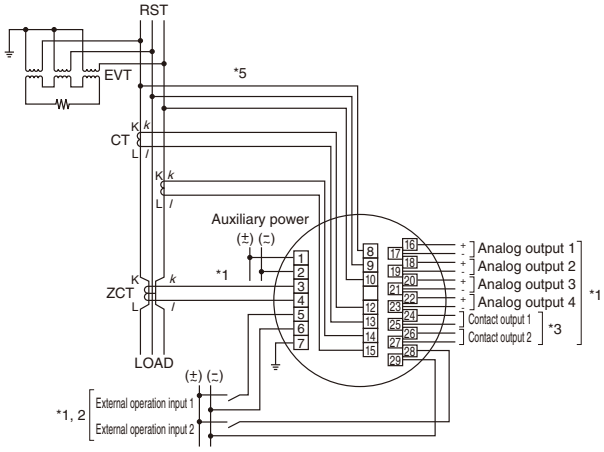

*1 Analog output, contact output, and external operation input are options. Furthermore, only zero phase current input products with electric leakage measurement function are available.
*2 External operation input can be changed to an external reset function or external display switching function by specifying in the settings.
*3 Contact output can be selected from pulse output, warning output, and CPU error output. (specified by customer)
*4 VT, CT secondary side grounding is unnecessary for low-voltage circuits. Furthermore, VT is unnecessary if using with 110 V or 220 V direct input.
*5 Voltage input is necessary when measuring leakage current Igr.

Switchboard Instruments
Super Multi-meter WE1MA type

● 3ϕ 4W *4

(1) Voltage, current input (2VT, 3CT)

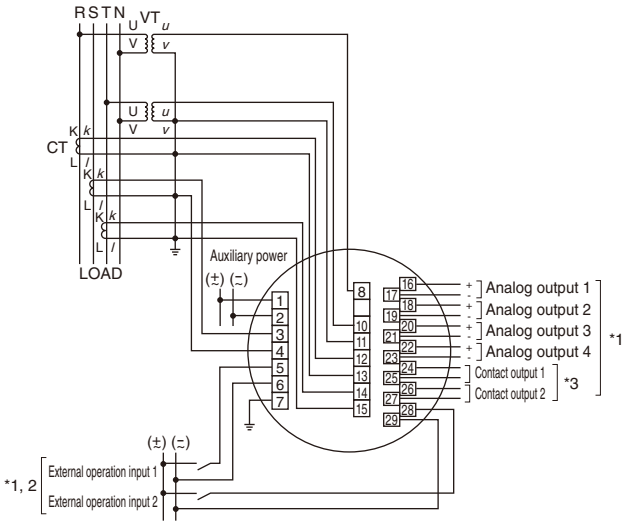

(2) Voltage, current input (3VT, 3CT)

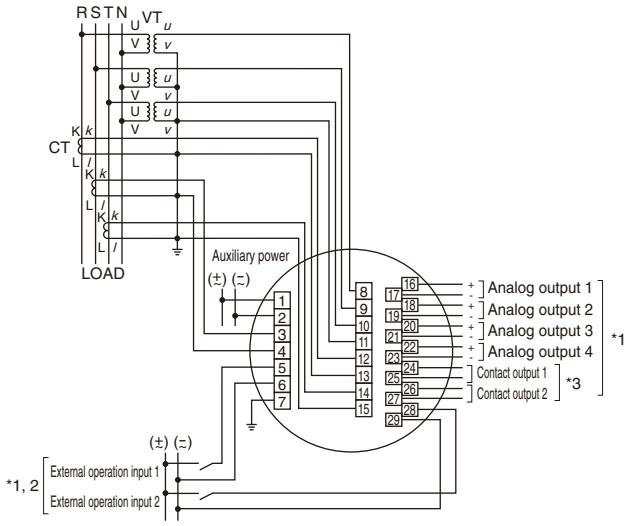

(3) Current input

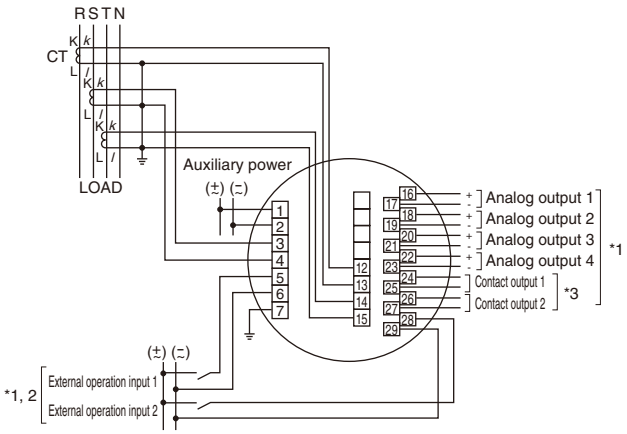

(4) Voltage input (2VT)

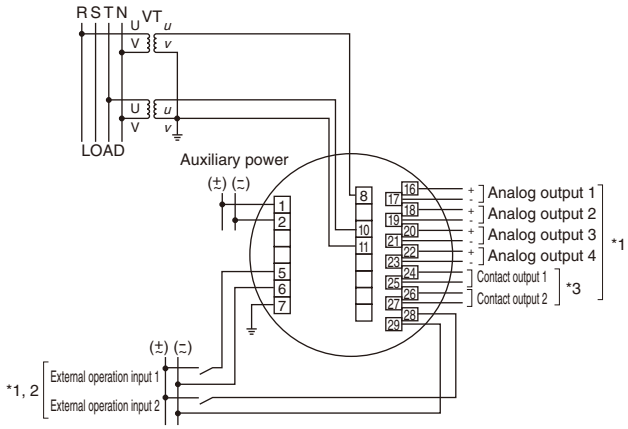

(5) Voltage input (3VT)

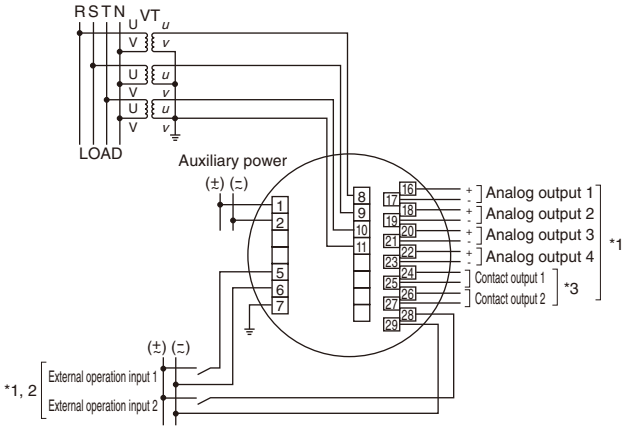

*1 Analog output, contact output, and external operation input are options.
*2 External operation input can be changed to an external reset function or external display switching function by specifying in the settings.
*3 Contact output can be selected from pulse output, warning output, and CPU error output. (specified by customer)
*4 VT, CT secondary side grounding is unnecessary for low-voltage circuits. Furthermore, VT is unnecessary if using with 110 V or 220 V direct input.

● Communication output terminal layout

(1) RS-485, Modbus RTU

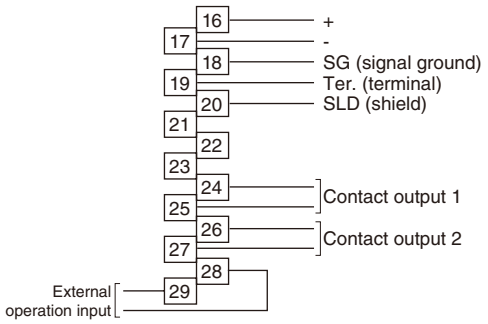

(2) CC-Link

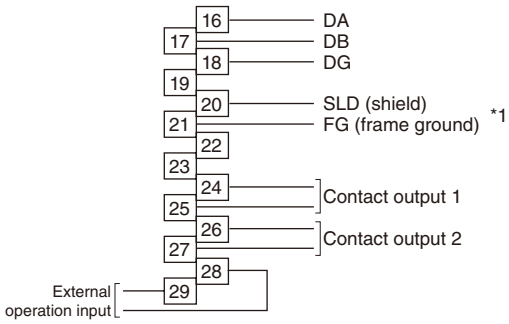

(3) AnyWire

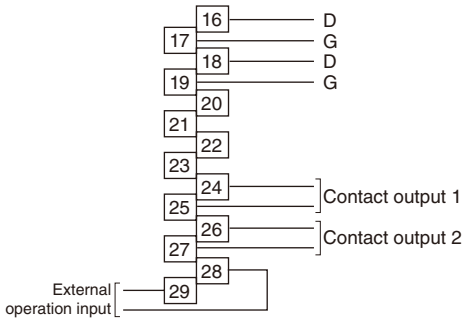

(4) F-MPC-Net

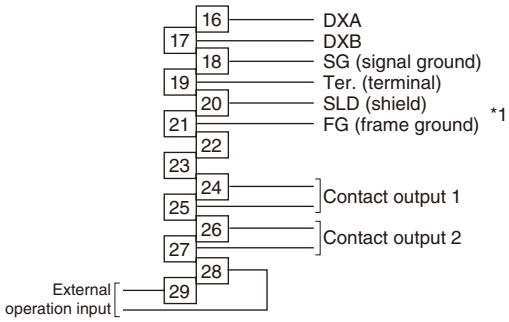

Note) A terminating resistor is connected internally for RS-485 or Modbus RTU by shorting Nos.17 (+) and 19 Ter.) for communication output.
Connect a dedicated terminating device for CC-Link or AnyWire specification.

*1 SLD and FG are connected internally.

● When fitting ZCT to ground wires (pay attention to ZCT polarity) *4

(1) Single-phase three-wire (1ϕ 3W) (N phase grounding)

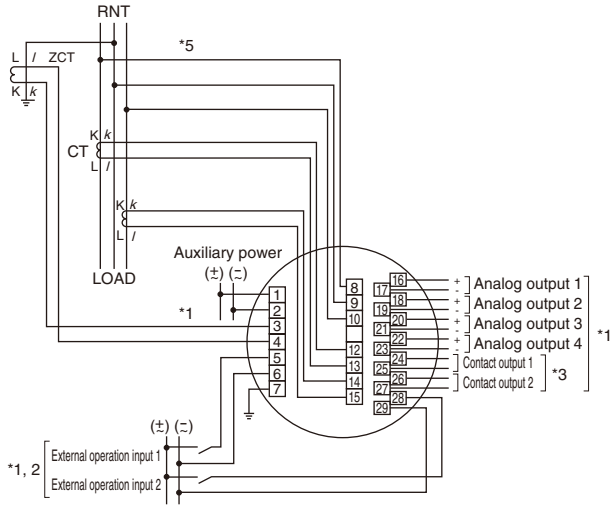

(2) Three-phase three-wire (3ϕ 3W) (S phase grounding)

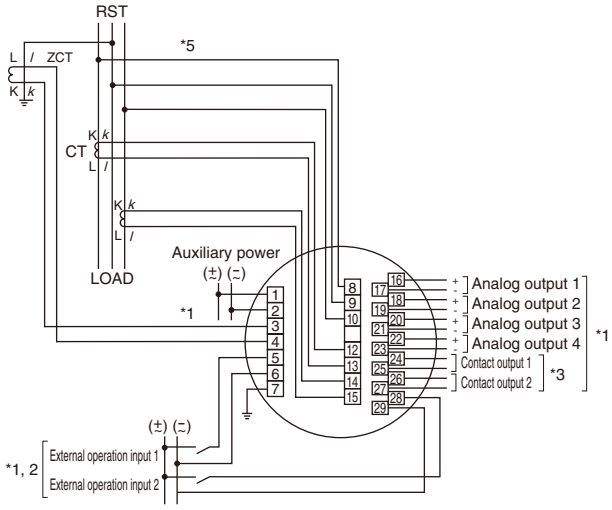

*1 Analog output, contact output, and external operation input are options. Furthermore, only zero phase current input products with electric leakage measurement function are available.
*2 External operation input can be changed to an external reset function or external display switching function by specifying in the settings.
*3 Contact output can be selected from pulse output, warning output, and CPU error output. (specified by customer)
*4 VT, CT secondary side grounding is unnecessary for low-voltage circuits. Furthermore, VT is unnecessary if using with 110 V or 220 V direct input.
*5 Voltage input is necessary when measuring leakage current Igr.

● Contact output combination

	Contact output combination				
	Pulse + warning	Warning x 2	Pulse x 2	Pulse + CPU error	Warning + CPU error
Contact output 1	Pulse output	Warning output 1	Pulse output 1	Pulse output	Warning output
Contact output 2	Warning output	Warning output 2	Pulse output 2	CPU error output	CPU error output

Switchboard Instruments
Super Multi-meter WE1MA type

■ External dimension drawings, installation precautions

● External dimension drawings (unit: mm)

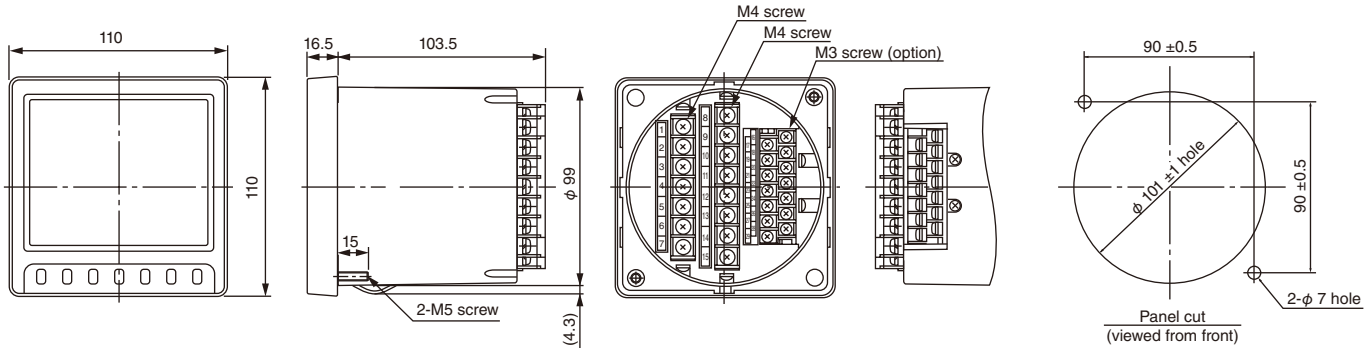

● Handling precautions

(1) The contrast of LCDs differs depending on the angle at which they are viewed, and so should be installed in the position that will result in the optimum angle.

● For upper level installation

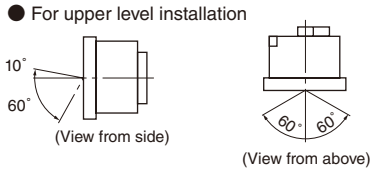

● For lower level installation

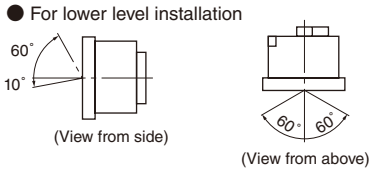

(2) Ensure that the installation panel thickness is 10 mm or less, and install using the M5 nuts provided.

(3) Apply tightening torque of 2.75 to 3.82 N·m.

■ ZCT external drawing (Products are as follows if equipped with ZCT)

50 A (type: OTG-LA21)

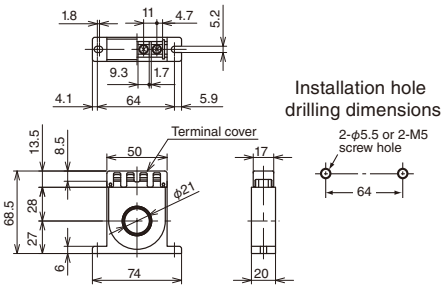

100 A (type: OTG-LA30)

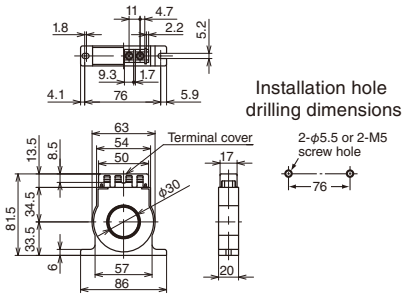

200 A (type: OTG-LA42)

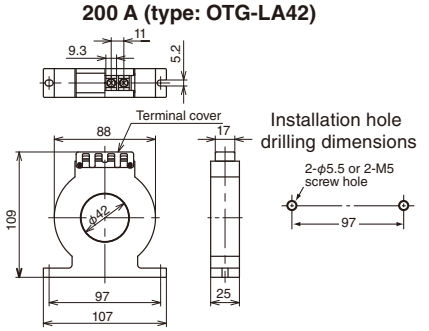

400 A (type: OTG-LA68)

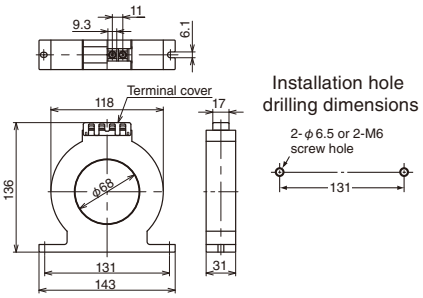

600 A (type: OTG-LA82)

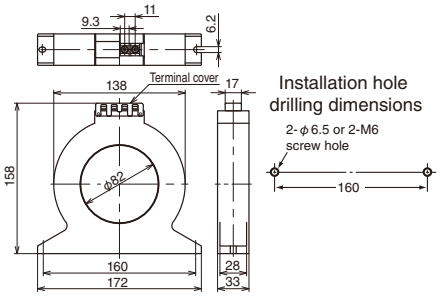

100 A outdoor use (type: OTG-LA30W)

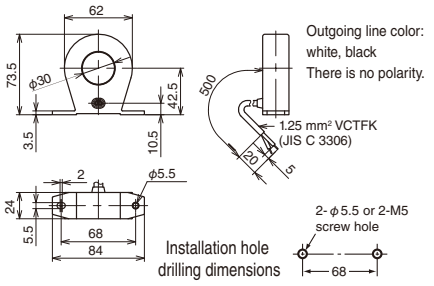

● ZCT usage precautions

(1) Do not ground the ZCT output terminal.

(2) Keep the wiring from the ZCT secondary side to WE1MA as short as possible. Use shielded wire if near the secondary side wiring or other large current circuits.

(3) ZCT primary polarity is necessary if measuring Igr with leakage current. Refer to the instruction manual for details.

● Method used to distinguish ZCT primary side polarity

(1) OMRON

Direction (front side) in which characters on nameplate affixed to ZCT can be read correctly is "K".

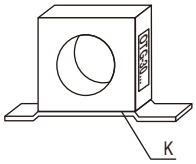

This is a multi-meter in which the harmonic measurement function has been omitted from WE1MA.
(Input circuit 1ø 2W, 1ø 3W, 3ø 3W, input range 150 V, 300 V common use, for 5 A)

■ Features

- Voltage, current, demand current, power, demand power, reactive power, power factor, frequency, electric energy, and reactive electric energy can be measured and monitored with a single unit.
- Three-phase three-wire, single-phase three-wire, and single-phase two-wire are common, and share 150 V/300 V. (Current is for 5 A.)
- Max. demand current and max. demand power can be monitored constantly.
- Measurements are displayed with a 4 element display comprising a single main monitor point and 3 sub monitor points in addition to a bar graph display.
- Output comprises 3 analog circuits, pulse output, warning output, and communication output. (specified by customer)
- The backlight brightness can be selected from 5 levels (1 to 5).

■ Model/type/price (excl. tax)/delivery

Measurement element	Input specifications		Type
	Input circuit	Input range	
Current (max. demand, demand, instantaneous) Power (max. demand, demand, instantaneous) Voltage, power factor, frequency, reactive power, electric energy, reactive electric energy	Single-phase two-wire (1ø 2W) Single-phase three-wire (1ø 3W) Three-phase three-wire (3ø 3W) All common use	150 V, 300 V common use, 5 A	**WE1MB-□FF1□-000**

* Displayed price does not include options.

■ Type number nomenclature

WE1MB - □ F F 1 □ - □ □ □

(1) Basic type

(2) Hard model

D	Phase indication R-S-T Japanese spec. White backlight
E	Phase indication R-Y-B English spec. White backlight

(3) Input circuit

F	1ϕ 2W, 1ϕ 3W, 3ϕ 3W, common use

(4) Input range

F	150 V, 300 V, common use, 5 A

(5) Auxiliary power

1	Used for 85 to 264 VAC and 80 to 143 VDC

(6) Mounting position

1	For upper level mounting
2	For lower level mounting

(7) Analog output or communication output

0	None
1	4 to 20 mA x 3 circuits
A	RS-485
M	Modbus RTU

(8) Contact output 2 circuit

0	None
1	Pulse + warning

(9) External operation input

0	None
1	1 circuit

Note) Combinations for (7), (8), and (9) are the 4 models “111”, “A11”, and “M11”, or “000” only.

Switchboard Instruments
Multi-meter WE1MB type

■ Specifications

Item	Measurement element	Measurement range/display specifications	Intrinsic error *1	Max. measurement	Min. measurement	Remarks
Measurement specifications	Voltage	150 VAC to 750 kV	± 0.5 %	○	○	RS-ST-TR line switching *2
	Current	Max. demand, demand, instantaneous 5 A to 30 k AC	± 0.5 %	○	○	R-S-T phase switching *3 The display and output range can be set separately from the measurement range.
	Power	Max. demand, demand, instantaneous 150 W to 1200 MW (range selection) Based on voltage, current range Single runout/double runout setting possible	± 0.5 %	○	○	Analog output range can also be set independently of display.
	Reactive power	LEAD, LAG 150 var to 1200 Mvar (range selection) Based on voltage, current range	± 0.5 %	○	○	Analog output range can also be set independently of display.
	Power factor	LEAD 0.500 to 1.000 to LAG 0.500 or LEAD 0.000 to 1.000 to LAG 0.000 range selection	± 2.0 %	○	○	cosϕ = 1 (output is cosϕ = 1 or equivalent) if input is less than 20% of voltage range or less than 2% of current range
	Frequency	45 to 55 Hz, 55 to 65 Hz, or 45 to 65 Hz range selection	± 0.5 %	○	○	0.0 Hz if input is less than 20% of voltage range, output is lower limit limiter value (lower limit value -1%: % of output span)
	Electric energy	Display: 5 integer digits Multiplying factor: integer power of 10 Up to 3rd decimal point, enlarged display possible Power calculation (power receipt, power transmission)	Power factor 1: ±2.0% Power factor 0.5: ±2.5%			Conforms to standard watt-hour meters See option specifications for pulse output unit (kWh/pulse) setting range
	Reactive electric energy	Display: 5 integer digits Multiplying factor: integer power of 10 Up to 3rd decimal point, enlarged display possible Power receipt reactive power calculation (LAG, LEAD) Power transmission reactive power calculation (LAG, LEAD)	Power factor 0: ±2.5% Power factor 0.87: ±2.5%			See option specifications for pulse output unit (kvarh/pulse) setting range

Item		Specifications
Operation method		Current, voltage: effective value calculation method Demand ammeter: calculation method based on thermal type Demand watt meter: calculation method based on thermal type, or mean value within demand time limit (select one of the two in settings) Power, reactive power, electric energy, reactive electric energy: time-division multiplication method Power factor: calculated from power, reactive power Frequency: zero-cross period calculation method
Time limit setting	Demand current	0 s/5 s/10 s/20 s/30 s/40 s/50 s/1 m/2 m/3 m/4 m/5 m/6 m/7 m/8 m/9 m/10 m/15 m/20 m/25 m/30 m (95% time limit)
	Demand power	
Display setting possible elements	Main monitor	Voltage (all phases and lines), current (all phases), demand current (all phases), max. demand current (all phases), power, demand power, max. demand power, reactive power, power factor, frequency, electric energy (power receipt, power transmission), reactive electric energy (power receipt LAG/LEAD, power transmission LAG/LEAD)
	Sub monitor (left)	Voltage (all phases and lines), current (all phases), power, reactive power, power factor
	Sub monitor (center)	Voltage (all phases and lines), current (all phases), demand current (all phases), max. demand current (all phases), power, demand power, max. demand power, reactive power, reactive electric energy (power receipt LAG/LEAD, power transmission LAG/LEAD)
	Sub monitor (right)	Voltage (all phases and lines), current (all phases), demand current (all phases), max. demand current (all phases), power, demand power, max. demand power, power factor, frequency, electric energy (power receipt, power transmission)
	Bar graph	Voltage (all phases and lines), current (all phases), demand current (all phases), max. demand current (all phases), power, demand power, max. demand power, reactive power, power factor, frequency
Option		Analog output (3 circuits) or, RS-485 communication output (protocol A/Modbus RTU), 1 pulse output, 1 warning output, 1 external operation input

(Note)
*1 The operating principle is such that the error increases if the next inverter output is measured directly. Cycle control, SCR phase-angle control, PWM control.
*2 Single-phase three-wire (R-T-N): RN-TN-RT, single-phase three-wire (R-S-N): RN-SN-RS, single-phase three-wire (S-T-N): SN-TN-ST, single-phase: no line display.
*3 Single-phase three-wire (R-T-N): R-T-N, single-phase three-wire (R-S-N): R-S-N, single-phase three-wire (S-T-N): S-T-N, single-phase: no phase display.

■ External drawings [unit: mm]

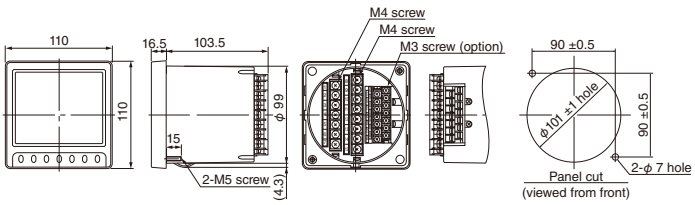

■ Installation

For upper level installation

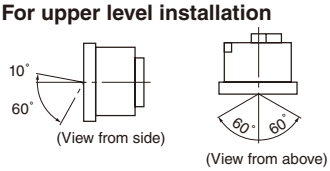

For lower level installation

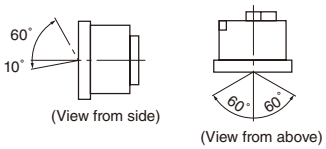

Installation: The contrast of LCDs differs depending on the angle at which they are viewed. Install in the position that will result in the optimum angle.

● Performance

Item	Specifications			
Intrinsic error	See “Intrinsic error” in “Measurement specifications”.			
Bar graph tolerance	±10% (% of span)			
Temperature influence	Within tolerance at 23 ±10°C			
Conforming standards	JIS C 1102-1:2007, JIS C 1102-2,-3,-4,-5,-7:1997 JIS C 1111:2006, JIS C 1216-1:2009, JIS C 1263-1:2009 TIA/EIA RS-485:1983			
Safety	JIS C 1010-1 : 2005 Measurement category III (category for measurement carried out for equipment in buildings) Max. working voltage: 300 V Pollution degree 2 (Normally only non-conductive pollution. However, temporary conductivity may occur due to condensation.)			
Display update time	Approx. 1 s (bar graph: 0.25 s)			
Display element/ configuration	LCD Numbers, characters Segment color: black	Main monitor	Character height: 11 mm, 5 digits	
		Sub monitor (left)	Character height: 6 mm, 4 digits	
		Sub monitor (center), (right)	Character height: 6 mm, 5 digits	
		Bar graph	20 dots	
LCD viewing angle	Standard product	For upper level installation (downward)	Up direction 10°, down direction 60°, left/right direction 60°	
	Special product	For lower level installation (upward)	Up direction 60°, down direction 10°, left/right direction 60°	
Backlight	LED backlight: white Can be set to always on, auto off (after 5 minutes of no operation), or always off Brightness can be selected from 5 levels (1 to 5) (default: 3) * Characteristics of LED are such that color tone (color) may differ for each product.			
Auxiliary power	Power supply range and consumption VA		(1) 85 to 264 VAC 10 VA (rated voltage: 100/110 VAC, 200/220 VAC) 80 to 143 V 6 W (rated voltage: 100/110 VDC), uses both AC/DC	
	Inrush power supply (time constant)		Rated voltage: 110 VAC, 2.2 A or less (approx. 3.6 ms)	Rated voltage: 220 VAC, 4.4 A or less (approx. 3.6 ms)
			Rated voltage: 110 VDC, 1.6 A or less (approx. 3.6 ms)	
Input consumption VA	Voltage circuit	0.25 VA or less (110 V), 0.5 VA or less (220 V)		
	Current circuit	0.1 VA or less (5 A)		
Overload capacity	Voltage circuit	2 times rated voltage for 10 seconds, 1.2 times continuously		
	Current circuit	40 times rated current for 1 second, 20 times for 4 seconds, 10 times for 16 seconds, 1.2 times continuously		
	Auxiliary power	1.5 times rated voltage for 10 seconds, 1.2 times continuously, when 110 VDC, 1.5 times rated voltage for 10 seconds, 1.3 times continuously		
Insulation resistance	Between collective electric circuits and outer case (ground)		50 MΩ or more with 500 VDC megohmmeter	
	Between inputs, outputs, auxiliary power			
	Between outputs (analog or communication output, pulse, warning)			
	No insulation between analog outputs (negative common)			
Voltage test (power frequency withstand voltage) JIS C 1102-1 JIS C 1111 JIS C 1216-1 JIS C 1263-1	Between collective electric circuits and outer case (ground)		2210 VAC (50/60 Hz), 5 seconds	
	Between inputs, outputs, auxiliary power			
	Between collective electric circuits and outer case (ground)		2000 VAC (50/60 Hz), 1 minute	
	Between inputs, outputs, auxiliary power			
	Between outputs (analog or communication output, pulse, warning)			
	No insulation between analog outputs (negative common)			
Impulse voltage test (lightning impulse withstand voltage) JIS C 1111 JIS C 1216-1 JIS C 1263-1	Between collective electric circuits (excl. analog output, communication output) and outer case (ground)		6 kV 1.2/50 μs, positive and negative polarity, 3 times each	
	Between input and auxiliary power (output grounded)		5 kV 1.2/50 μs, positive and negative polarity, 3 times each	
Noise tolerance ANSI C37.90a Power standard B-402 IEC801-2	(1) Oscillatory surge voltage Measurement error should be within ±10%, and there should be no malfunctioning when attenuating oscillatory wave form of 1 to 1.5 MHz, peak voltage of 2.5 to 3 kV is applied repeatedly for 30 seconds. Furthermore, there should be no communication errors, stoppages. Voltage input circuit (normal/common), current input circuit (common), power supply circuit (normal/common) (2) Square-wave impulse noise Measurement error should be within ±10%, and there should be no malfunctioning when 1 μs, 100 ns width noise is applied repeatedly for 5 minutes. Furthermore, there should be no communication errors, stoppages. Power supply circuit (common/normal) 1500 V or more — Warning output (common) 1000 V or more Voltage input circuit (common/normal) 1500 V or more — Operation input (common) 1000 V or more Current input circuit (common) 1500 V or more — Analog circuit (induction) 1000 V or more Pulse output (common) 1000 V or more — Communication output circuit (induction) 1000 V or more (3) Radio wave noise: Measurement error should be within ±10%, and there should be no malfunctioning when 150, 400, and 900 MHz band radio waves are irradiated intermittently at 5 W, 1 m, and when mobile phone radio waves are irradiated intermittently at 1 m. Furthermore, there should be no communication errors, stoppages. (4) Electrostatic noise: Measurement error should be within ±10% at 8 kV when power is on. Furthermore, there should be no communication errors, stoppages. There should be no damage at 10 kV when power is off. (capacitor charging method) * Communication error: This is when receipt and transmission are not performed correctly even after 3 consecutive attempts.			
Vibration JIS C 1102-1	Sweep vibration frequency range: 10 to 55 to 10 Hz, displacement amplitude: 0.15 mm, sweep count: 5, sweep speed: 1 octave/min			
Shock JIS C 1102-1	Peak acceleration: 490 m/s², pulse waveform: sine half-wave, pulse operation time: 11 ms Shock count: 3 times each in forward and backward direction mutually in perpendicular 3-axis direction (total: 18 times)			
Construction	Exterior: 110(W) x 110(H) x 104(D) mm, shell diameter ϕ99 mm , with terminal cover, protection level IP40 Case material: ABS (V-0)		Exterior color: black (Munsell N1.5) Weight: approx. 600 g	
Power failure guarantee	Max. value, min. value, cumulative value, all setting value data retained in non-volatile memory.			
Operating temperature and humidity range	-10 to +55°C, 30 to 85% RH, there should be no condensation			
Storage temperature range	-25 to 70°C			
Altitude	2000 m or less			

Switchboard Instruments
Multi-meter WE1MB type

● Specifications

Item	Specifications	
Analog output	Number of outputs	3 circuits (negative common)
	Output specifications	4 to 20 mA DC (550 Ω or less)
	Output elements	Voltage (all phases and lines), current (all phases), demand current (all phases), max. demand current (all phases), power, demand power, max. demand power, reactive power, power factor, frequency
	Response time	1 s or less (time until within ±1% of final steady-state value)
	Output ripple	Within 2 times intrinsic error (% of output span)

Pulse output

Electric energy or reactive electric energy
Output method: optical MOS-FET relay contact 1a
Contact capacity: 125 VAC/DC, 70 mA (resistive load, inductive load)
Pulse width: 250 ±10 ms (Depending on the voltage measurement range, current measurement range, and output pulse unit settings, the output pulse width will be 100 to 130 ms if the output pulse cycle at rated power is speed of 2 pulses/s or faster.)
The output pulse unit can be set in the following ranges.
■ Three-phase three-wire : Full load power (kW, kvar) = $\sqrt{3}$ x rated voltage (V) x rated current (A) x 10^{-3}
■ Single-phase three-wire : Full load power (kW, kvar) = 2 x rated voltage (V) x rated current (A) x 10^{-3}
■ Single-phase : Full load power (kW, kvar) = rated voltage (V) x rated current (A) x 10^{-3}

Full load power (kW, kvar)		Output pulse unit kWh (kvarh)/pulse				Multiplying factor
	Less than 1	0.1	0.01	0.001	0.0001	0.01 *
1 or more	Less than 10	1	0.1	0.01	0.001	0.1
10 or more	Less than 100	10	1	0.1	0.01	1
100 or more	Less than 1,000	100	10	1	0.1	10
1,000 or more	Less than 10,000	1,000	100	10	1	100
10,000 or more	Less than 100,000	10,000	1,000	100	10	1,000
100,000 or more	Less than 1,000,000	100,000	10,000	1,000	100	10,000

Warning output

Warning element: Demand current, demand power, voltage, or warning OFF can be set
Reset type: Auto reset or manual reset (setting)
Output contact: non-voltage contact a (all phase detection OR)
Contact capacity: 250 VAC 5 A, 125 VDC 0.3 A (resistive load), 250 VAC 2 A, 125 VDC 0.1 A (inductive load)

Warning element	Item	Specifications
Demand current Demand power	Functions	Warning display, warning output at demand measurement value ≥ upper limit setting value
	Setting accuracy	±0.5% (% of full scale)
	Setting range	5 to 100% of max. scale value (1% steps)
Voltage	Functions	Warning display, warning output at measurement value ≥ upper limit setting value Warning display, warning output at measurement value ≤ lower limit setting value
	Setting accuracy	±0.5% (% of full scale)
	Setting range	30 to 150% with full scale of 150% (1% steps)

External operation input		
Number of points		1 circuit, functions (3 types) changed in settings
Functions		The following three function types (changed in settings) can be used by applying external voltage signals.
	Warning reset	Resets the warning output (output off).
	Max. / min. reset	Resets the maximum / minimum values (updated to instantaneous value at that point).
	Batch reset	Resets the above warning output and maximum / minimum values at the same time.
Min. operation pulse width		300 ms, continuous application possible
Input rating		The input rating is the same as that for auxiliary power. 100/110 VAC 0.4 VA, 200/220 VAC 1.4 VA, 100/110 VDC 0.4 W, uses both AC/DC Contact capacity: approx. 3 mA (100/110 VAC/DC), approx. 6 mA (200/220 VAC)

Item	Specifications		Remarks
RS-485, protocol A Communication output	Standard	EIA RS-485	
	Transmission method	Half duplex two-wire type	
	Synchronization method	Start-stop synchronization method	
	Transmission speed	1200 bps/2400 bps/4800 bps/9600 bps/19200 bps	
	Transmission code	NRZ	
	Start bit	1 bit	
	Data length	7 bits / 8 bits	
	Parity bit	NONE / ODD / EVEN	
	Stop bit	1 bit / 2 bits	
	Cable length	1000 m (total length)	
	Address	1 to 254	Number of connected units, max. 31 units
	Error detection	Check sum	
	Transmission character	ASCII code	
Modbus RTU mode Communication output	Standard	EIA RS-485	
	Used function codes	03 H, 04 H, 06 H, 08 H	RTU: Remote Terminal Unit (monitoring operation unit) PI-MBUS-300 Rev.J Modbus Application Protocol specification V1.1b
	Transmission method	Half duplex two-wire type	
	Synchronization method	Start-stop synchronization method	
	Transmission speed	4800 bps/9600 bps/19200 bps/38400 bps	
	Transmission code	NRZ	
	Start bit	1 bit	
	Data length	8 bits	
	Parity bit	NONE / ODD / EVEN	
	Stop bit	1 bit / 2 bits	
	Transmission code	Binary	
	Cable length	1000 m (total length)	
	Address	1 to 247	Number of connected units, max. 31 units
	Error detection	CRC-16	$X^{16}+X^{15}+X^{2}+1$
	Connection configuration	Multidrop	

Note (*): The multiplying factor is 0.01, however, the multiplying factor on the display is 0.1. (4-digit integer display, enlarged display shows up to 4th decimal point)

■ Range setting

● Voltage measurement range

150 V (110 V)
300 V (220 V, 220 V/110 V)
500 V (380 V/110 V)
600 V (440 V/110 V)
600 V (460 V/110 V)
600 V (480 V/110 V)
1200 V (880 V/110 V)
1500 V (1100 V/110 V)
2400 V (1650 V/110 V)
3000 V (2200 V/110 V)
4500 V (3300 V/110 V)
9000 V (6600 V/110 V)
15 kV (11 kV/110 V)
18 kV (13.2 kV/110 V)
18 kV (13.8 kV/110 V)
24 kV (16.5 kV/110 V)
24 kV (18.4 kV/110 V)
30 kV (22 kV/110 V)
45 kV (33 kV/110 V)
90 kV (66 kV/110 V)
120 kV (77 kV/110 V)
150 kV (110 kV/110 V)
180 kV (132 kV/110 V)
210 kV (154 kV/110 V)
270 kV (187 kV/110 V)
300 kV (220 kV/110 V)
400 kV (275 kV/110 V)
500 kV (380 kV/110 V)
750 kV (550 kV/110 V)

● Current measurement range

5 A	40 A	300 A	1600 A	9 kA
6 A	50 A	400 A	1800 A	10 kA
7.5 A	60 A	500 A	2000 A	12 kA
8 A	75 A	600 A	2500 A	15 kA
10 A	80 A	750 A	3000 A	20 kA
12 A	100 A	800 A	4000 A	30 kA
15 A	120 A	900 A	5000 A	
20 A	150 A	1000 A	6000 A	
25 A	200 A	1200 A	7500 A	
30 A	250 A	1500 A	8000 A	

The number of digits displayed for the voltage measurement range and current measurement range can be changed to 3 or 4 digits in the settings.

■ Compatibility with Ministry of Land, Infrastructure, Transport and Tourism "Standard Specifications for Public Construction Work" (content is same as that for WE1MA).

■ Name and function of each part (meter parts are same as those for WE1MA.)

■ Wiring diagrams

1φ 2W analog output (6)

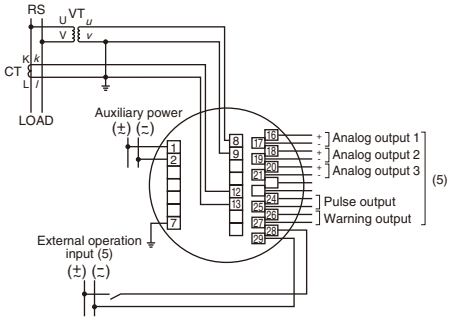

1φ 3W analog output

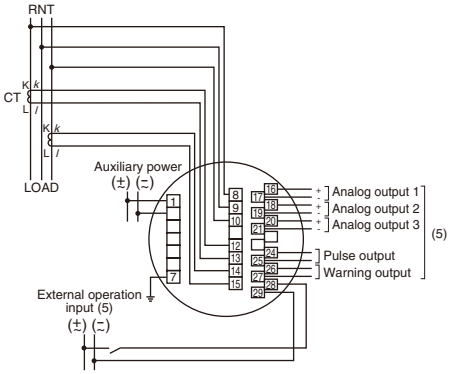

3φ 3W (2VT, 2CT) analog output (6)

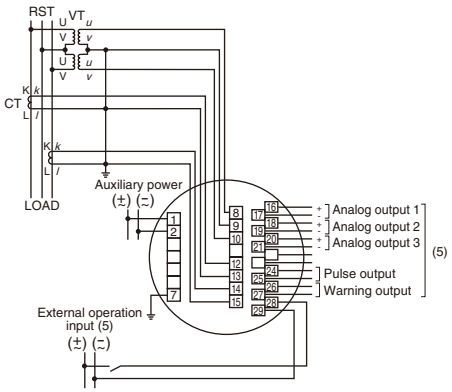

1φ 2W communication output (6)

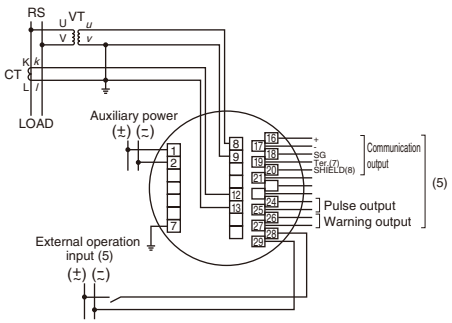

1φ 3W communication output

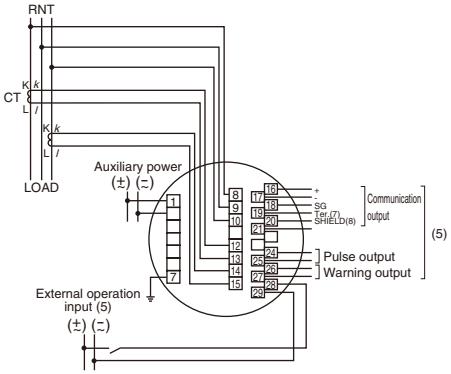

3φ 3W (2VT, 2CT) communication output (6)

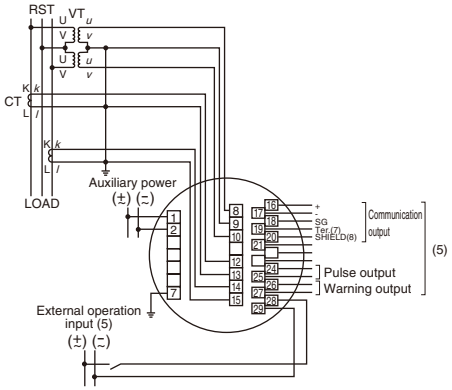

Note (5) Communication output, pulse output, warning output, and external reset input are options.
(6) VT, CT secondary side grounding is unnecessary for low-voltage circuits. Furthermore, VT is unnecessary if using with 110 V or 220 V direct input.
(7) A terminating resistor is connected internally by shorting Nos.17 (-) and 19 (Ter.) (The connection configuration is such that only a terminating device should be used.)
(8) This terminal is for relay of communication cable shield wire (for transition wiring). It cannot be connected to the ground or internal common.

Wiring precautions

(1) In the interests of safety, be sure to attach the terminal cover after wiring work is complete.
(2) Be sure to separate input and output side wiring, and take external noise into consideration (malfunction prevention).
(3) Be sure to ground earthing terminal E (terminal No. 7) to improve the shielding effect. Furthermore, ensure that the grounding resistance between the earthing terminal and ground is 100 Ω or less.
(4) Ensure that the distance between this product and circuit breakers, and relay contact signal lines is 30 cm or more.
(5) When sending analog output over a distance directly, this product requires no protection even if there is a fear of the transmission line being affected by induced lightning surges, etc. Note that to protect devices at the receiver side, install a surge protection device between lines, or an arrester, etc. of approximately 500 V between the transmission line and ground at the receiver side.
(6) If connecting an inductive load to the warning output, it is recommended that an external surge suppressor be installed. The contact life expectancy will be shorter without a surge suppressor.

Switchboard Instruments
Three-Phase Current, Voltage Meter WE1SA, WE1SV type

Ideal for power receipt, bus, and feeder three-phase current and voltage measurement

■ Features

- Three-phase three-wire, single-phase, single-phase three-wire common use type available.
  Items in parentheses ( ) are measurement specifications:
  Three-phase ammeter (max. demand, demand, instantaneous)
  Three-phase voltmeter (voltage, frequency)
- One bar graph measurement and four digital measurements displayed simultaneously.
- Analog output 3 circuit and warning output 1 circuit can be extracted. Output elements can be selected in settings. (option)
- Resetting possible at single external operation input. (option) Furthermore, warning output, max./min. values, or warning output and max./min. values can be selected in settings.
- Uses both AC/DC power supply of 85 to 264 VAC, 80 to 143 VDC.
- Compatible with conventional 110 degree mechanical meter and installation method. Meters are installed at two points on opposite corners.
- Equipped with backlight function as standard. A selection can be made between on, off, and auto off, and brightness can be set. LED color: white
- Meters for both upper and lower level installation available.

WE1SA WE1SV

■ Model/type/price (excl. tax)/delivery

Product name	Type	Input circuit	Input range
Three-phase ammeter	**WE1SA-□F511-000**	Three-phase three-wire (3ø 3W) Single-phase (1ø)	5 A
Three-phase voltmeter	**WE1SV-□FD11-000**	Single-phase three-wire (1ø 3W) Common use	150, 300 V Common

■ Type number nomenclature

WE1SA – □ F 5 1 □ – □ □ □

(1) (2) (3) (4) (5) (6) (7) (8) (9)

(1) Basic type

WE1SA	Three-phase ammeter
WE1SV	Three-phase voltmeter

(2) Hard model

D	Phase indication R-S-T Japanese spec. White backlight
E	Phase indication R-Y-B English spec. White backlight

(3) Input circuit

F	Common to 1ϕ 2W, 1ϕ 3W, 3ϕ 3W

(4) Input range

5	Three-phase ammeter 5A
D	Common to three-phase voltmeter 150 V, 300 V

(5) Auxiliary power

1	Common to 85 to 264 VAC, 80 to 143 VDC

(6) Installation position

1	For upper level installation
2	For lower level installation

(7) Analog output

0	None
1	4 to 20 mA x 3 circuits

(8) Contact output 1 circuit

0	None
1	Warning 1 circuit

(9) External operation input

0	None
1	1 circuit

(Note) Combinations for (7), (8), and (9) are "000" and "111".

■ Ratings, specifications, measurement ranges

	Type		Ammeter WE1SA		Voltmeter WE1SV	
Rating	Input circuit/input		Three-phase three-wire, single-phase three-wire, single-phase	AC5A 50/60 Hz	Three-phase three-wire, single-phase	Common to 110/220 VAC, 50/60 Hz
					Single-phase three-wire	100 to 200 VAC*1 50/60 Hz
Specifications	Measurement element		Current		Voltage	Frequency
	Measurement range/ display specifications		Max. demand, demand, instantaneous, AC5A to 30 kA		150 VAC to 750 kV	45 to 55 Hz, 55 to 65 Hz, or 45 to 65 Hz range selection
	Intrinsic error *2	Digital display	± 0.5 %		± 0.5 %	± 0.5 %
		Analog output *3	± 0.5 %		± 0.5 %	± 0.5 %
	Max. measurement		○		○	○
	Min. measurement		○		○	○
	Bar graph display		The main monitor element is a bar graph display. The sub monitor element can also be displayed by setting.			
	Operation method		Current: effective value calculation method Demand current: calculation method based on thermal type		Voltage: effective value calculation method Frequency: zero-cross period calculation method	
	Time limit setting	Demand current	0 s/5 s/10 s/20 s/30 s/40 s/50 s/1 m/2 m/3 m/4 m/5 m/6 m/7 m/8 m/9 m/10 m/15 m/20 m/25 m/30 m (95% time limit)		-	
	Display setting possible elements	Main monitor	Current (all phases), demand current (all phases), max. demand current (all phases)		Voltage (all phases and lines), frequency	
		Sub monitor (left)	Current (all phases)		Voltage (all phases and lines)	
		Sub monitor (center)	Current (all phases), demand current (all phases), max. demand current (all phases)		Voltage (all phases and lines)	
		Sub monitor (right)	Current (all phases), demand current (all phases), max. demand current (all phases)		Voltage (all phases and lines), frequency	
		Bar graph	Current (all phases), demand current (all phases), max. demand current (all phases)		Voltage (all phases and lines), frequency	
	Option		Analog output (3 circuits), 1 warning output, 1 external operation input			
	Remarks		R-S-T phase switching *4 The display and output range can be set separately from the measurement range.		RS-ST-TR line switching *5	0.0 Hz if input is less than 20% of voltage range, output is lower limit limiter value (lower limit value -1%: % of output span)
Measurement range	Measurement element		Current	Demand current	Voltage	Frequency
	Input		0 to 5 A AC		0 to 150 VAC [0 to 300 VAC] *7	45 to 55 Hz 55 to 65 Hz 45 to 65 Hz
	Measurement range	Display	120% of meter full scale *6	200% of meter full scale *6	101% of meter full scale	44.9 to 55.1 Hz 54.9 to 65.1 Hz 44.8 to 65.2 Hz
		Analog output	120% of output span	120% of output span	101% of output span	-1%, 101% of output span

*1 The rated voltage for each phase and N phase is 100 V, however, when the input voltage full scale is set to 150 V, the bar graph indicates RN, TN: 150 V, RT: 300 V, and when the input voltage full scale is set to 300 V, the bar graph indicates RN, TN, RT: 300 V.
*2 The operating principle is such that the error increases if the next inverter output is measured directly. Cycle control, SCR phase-angle control, PWM control.
*3 Analog output, warning output, and external operation input are options.
*4 Single-phase three-wire (R-T-N): R-T-N, single-phase three-wire (R-S-N): R-S-N, single-phase three-wire (S-T-N): S-T-N, single-phase: no phase display.
*5 Single-phase three-wire (R-T-N): RN-TN-RT, single-phase three-wire (R-S-N): RN-SN-RS, single-phase three-wire (S-T-N): SN-TN-ST, single-phase: no line display.
*6 If the number of displayed digits that can be displayed is exceeded even if the value lies within the measurement range, a value up to 9999 (4-digit display) or 999 (3-digit display) is displayed.
*7 [ ] indicates the input at 300 V.

Switchboard Instruments
Three-Phase Current, Voltage Meter WE1SA, WE1SV type

■ Common specifications, performance

Type	Ammeter WE1SA			Voltmeter WE1SV	
Intrinsic error	See "Intrinsic error" in "Specifications" field on previous page.				
Bar graph tolerance	±10% (% of span)				
Temperature influence	Within tolerance at 23 ±10°C				
Conforming standards	JIS C 1102-1:2007, JIS C 1102-2, -7, -9:1997, JIS C 1111:2006			JIS C 1102-1:2007, JIS C 1102-2, -4, -7, -9:1997, JIS C 1111:2006	
Safety	JIS C 1010-1:2005 Measurement category III (category for measurement carried out for equipment in buildings) Max. working voltage: 300 V Pollution degree 2 (Normally only non-conductive pollution. However, temporary conductivity may occur due to condensation.)				
Display update time	Approx. 1 s (bar graph: 0.25 s)				
Display element/configuration	LCD [Numbers, characters Segment color: black]	Main monitor	Character height: 11 mm, 4 digits		
		Sub monitor (left)	Character height: 6 mm, 4 digits		
		Sub monitor (center), (right)	Character height: 6 mm, 4 digits		
		Bar graph	20 dots		
LCD viewing angle	Standard product	For upper level installation (downward): up direction 10°, down direction 60°, left/right directions 60°			
	Special product	For lower level installation (upward): up direction 60°, down direction 10°, left/right directions 60°			
Backlight	LED backlight: white Can be set to always on, auto off (after 5 minutes of no operation), or always off Brightness can be selected from 5 levels (1 to 5) * Characteristics of LED are such that color tone (color) may differ for each product.				
Power supply range and consumption VA	85 to 264 VAC, 50/60 Hz, 10 VA (rated voltage: 100/110 VAC, 200/220 VAC) 80 to143 VDC, 6 W (rated voltage: 100/110 VDC), uses both AC/DC.				
Inrush current (time constant)	Rated voltage: 110 VAC, 2.2 A or less (approx. 2.5 ms)				
	Rated voltage: 220 VAC, 4.4 A or less (approx. 2.5 ms)				
	Rated voltage: 110 VDC, 1.6 A or less (approx. 2.5 ms)				
Input consumption VA	Current circuit	0.1 VA or less (5 A)		Voltage circuit	0.25 VA or less (110 V), 0.5 VA or less (220 V)
Overload capacity	Current circuit	40 times rated current for 1 second, 20 times for 4 seconds, 10 times for 16 seconds, 1.2 times continuously		Voltage circuit	2 times rated voltage for 10 seconds, 1.2 times continuously
	Auxiliary power	1.5 times rated voltage for 10 seconds, 1.2 times continuously 1.5 times rated voltage for 10 seconds, 1.3 times continuously at 110 VDC			
Insulation resistance	Between collective electric circuits and outer case (ground)			50 MΩ or more with 500 VDC megohmmeter	
	Between inputs, outputs, auxiliary power				
	Between analog outputs and warning outputs				
	No insulation between analog outputs (negative common)				
Voltage test (power frequency withstand voltage) JIS C 1102-1 JIS C 1111	Between collective electric circuits and outer case (ground)			2210 VAC (50/60 Hz), 5 seconds	
	Between inputs, outputs, auxiliary power				
	Between analog outputs and warning outputs				
	No insulation between analog outputs (negative common)				
Impulse voltage test (lightning impulse withstand voltage) JIS C 1111	Between collective electric circuits (excl. analog output) and outer case (ground)			5 kV 1.2/50 μs, positive and negative polarity, 3 times each	
	Between input and auxiliary power (output grounded)			5 kV 1.2/50 μs, positive and negative polarity, 3 times each	
Noise tolerance Power standard B-402	(1) Oscillatory surge voltage Measurement error should be within ±10%, and there should be no malfunctioning when attenuating oscillatory wave form of 1 to 1.5 MHz, peak voltage of 2.5 to 3 kV is applied repeatedly for 30 seconds. Current input circuit (common), voltage input circuit (normal/common), power supply circuit (normal/common) (2) Square wave impulse noise Measurement error should be within ±10%, and there should be no malfunctioning when 1 μs, 100 ns width noise is applied repeatedly for 5 minutes. Power supply circuit (normal/common) 1500 V or more Current input circuit (common) 1500 V or more Voltage input circuit (normal/common) 1500 V or more Warning output (common) 1000 V or more Operation input (common) 1000 V or more Analog output circuit (induction) 1000 V or more (3) Radio wave noise Measurement error should be within ±10%, and there should be no malfunctioning when 150, 400, and 900 MHz band radio waves are irradiated intermittently at 5 W, 1 m, and when mobile phone radio waves are irradiated intermittently at 1 m. (4) Electrostatic noise easurement error should be within ±10% at 8 kV when power is on. There should be no damage at 10 kV when power is off. Capacitor charging method				
Vibration JIS C 1102-1	Sweep vibration frequency range: 10 to 55 to 10 Hz, displacement amplitude: 0.15 mm, sweep count: 5, sweep speed: 1 octave/min				
Shock JIS C 1102-1	Peak acceleration: 490 m/s^2, pulse waveform: sine half-wave, pulse operation time: 11 ms Shock count: 3 times each in forward and backward direction mutually in perpendicular 3-axis direction (total: 18 times)				
Construction	Exterior: 110(W) x 110(H) x 104(D) mm, shell diameter ϕ99 mm , with terminal cover, protection level IP40 Case material: ABS (V-0), exterior color: black (Munsell N1.5), weight: approx. 600 g				
Power failure guarantee	Max. value, min. value, all setting value data retained in non-volatile memory				
Operating temperature and humidity range	-10 to 55°C, 30 to 85% RH, there should be no condensation				
Storage temperature range	-25 to 70°C				
Altitude	2000 m or less				

■ Option specifications

Type			Ammeter WE1SA	Voltmeter WE1SV
Analog output	Number of outputs		3 circuits (negative common)	
	Output specifications		4 to 20 mA DC (550 Ω or less)	
	Output elements		Current (all phases), demand current (all phases), max. demand current (all phases)	Voltage (all phases and lines), frequency
	Response time		1 s or less (time until within ±1% of final steady-state value)	
	Output ripple		Within 2 times intrinsic error (% of output span)	
Warning output	Warning element		Demand current [each phase OR, each individual phase, each phase OR excluding synthetic phase], or warning OFF can be set	Voltage (each line (phase) OR, each individual line (phase)), or warning OFF can be set
	Reset type		Auto reset or manual reset (setting)	
	Output contact		Non-voltage contact a	
	Contact capacity		250 VAC 5 A, 125 VDC 0.3 A (resistive load), 250 VAC 2 A, 125 VDC 0.1 A (inductive load)	
	Warning element	Item	Specifications	
	WE1SA: Demand current WE1SV: Voltage	Functions	Warning display, warning output at demand measurement value ≥ upper limit setting value	Warning display, warning output at measurement value ≥ upper limit setting value Warning display, warning output at measurement value ≤ lower limit setting value
		Setting accuracy	±0.5% (% of full scale)	±0.5% (% of full scale)
		Setting range	5 to 100% of max. scale value (1% steps)	30 to 150% with full scale of 150% (1% steps)
External operation input	Functions		The following three functions (changed in settings) can be used by applying external voltage signals.	
		Warning reset	Resets the warning output (output off).	
		Max. / min. reset	Resets the maximum / minimum values (updated to instantaneous value at that point).	
		Batch reset	Resets the above warning output and maximum / minimum values at the same time.	
	Min. operation pulse width		300 ms, continuous application possible	
	Input rating		The input rating is the same as that for auxiliary power. 100/110 VAC 0.4 VA, 200/220 VAC 1.4 VA, 100/110 VDC 0.4 W, uses both AC/DC Contact capacity: approx. 3 mA (100/110 VAC/DC), approx. 6 mA (200/220 VAC)	

● Precautions for using external display switching input (option)

External power consumption is 0.4 VA at 110 VAC, 0.4 W at 110 VDC, and 1.4 VA at 220 VAC.
If using relays or switches to supply power, use products with minimum applicable load of approximately 1 mA.

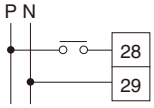

Switchboard Instruments
Three-Phase Current, Voltage Meter WE1SA, WE1SV type

■ Range setting

Set appropriate current and voltage values for the following ranges.

● WE1SA current measurement range

5 A	40 A	300 A	1600 A	9 kA
6 A	50 A	400 A	1800 A	10 kA
7.5 A	60 A	500 A	2000 A	12 kA
8 A	75 A	600 A	2500 A	15 kA
10 A	80 A	750 A	3000 A	20 kA
12 A	100 A	800 A	4000 A	30 kA
15 A	120 A	900 A	5000 A	
20 A	150 A	1000 A	6000 A	
25 A	200 A	1200 A	7500 A	
30 A	250 A	1500 A	8000 A	

The number of digits displayed for the voltage measurement range and current measurement range can be changed to 3 or 4 digits in the settings.

● WE1SV voltage measurement range

150 V (110 V)	18 kV (13.8 kV/110 V)
300 V (220 V, 220 V/110 V)	24 kV (16.5 kV/110 V)
500 V (380 V/110 V)	24 kV (18.4 kV/110 V)
600 V (440 V/110 V)	30 kV (22 kV/110 V)
600 V (460 V/110 V)	45 kV (33 kV/110 V)
600 V (480 V/110 V)	90 kV (66 kV/110 V)
1200 V (880 V/110 V)	120 kV (77 kV/110 V)
1500 V (1100 V/110 V)	150 kV (110 kV/110 V)
2400 V (1650 V/110 V)	180 kV (132 kV/110 V)
3000 V (2200 V/110 V)	210 kV (154 kV/110 V)
4500 V (3300 V/110 V)	270 kV (187 kV/110 V)
9000 V (6600 V/110 V)	300 kV (220 kV/110 V)
15 kV (11 kV/110 V)	400 kV (275 kV/110 V)
18 kV (13.2 kV/110 V)	500 kV (380 kV/110 V)
	750 kV (550 kV/110 V)

■ Name and function of each part

Bar graph display area
Main monitor measurement values can be displayed in analog format. (Sub monitor measurement values can be set to display in bar graph format also.)

Scale value
This is set automatically in the measurement range settings.

MODE
In setting mode, this is used as a button for changing the setting item.

RESET/SHIFT
Holding down continuously for 1 second or longer resets warnings, as well as maximum and minimum values (elements displayed on main monitor). In setting mode, this is used as a button for moving (advancing) setting items.

SET
This button is used to change to setting mode. Hold down for 3 seconds or longer to change to setting mode. In setting mode, this is used as a button for configuring the setting value.

Digital display area
4 elements can be measured and monitored simultaneously.

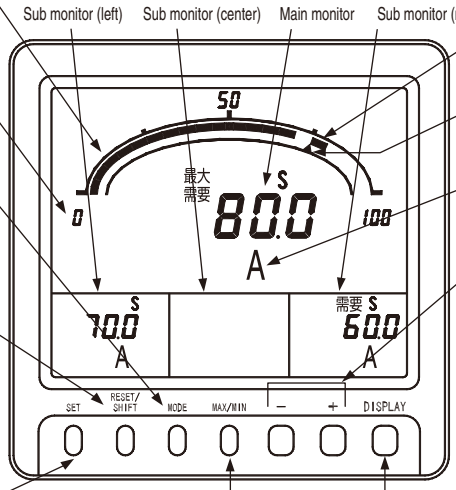

Max. demand value

Upper limit setting index
Displays the upper limit setting value.

Unit display
This is set automatically in the measurement range settings.

- +
This button is used to change the main monitor measurement display element.
After changing the display, it will return to the original measurement display element after 10 minutes of no operation.
In setting mode, this is used as a button for changing setting values.

MAX/MIN
This button is used to change between the normal general measurement display and max., min. measurement display.
In setting mode, this is used as a button for moving (returning) setting items.

DISPLAY
This button is used to change the current phase display. After changing the display, it will return to the original phase display after 10 minutes of no operation.
In setting mode, this is used as a button to exit setting mode.

General measurement display —MAX/MIN→ Max., min. measurement display
Max., min. measurement display —MAX/MIN→ General measurement display

■ External dimension drawings [unit: mm]

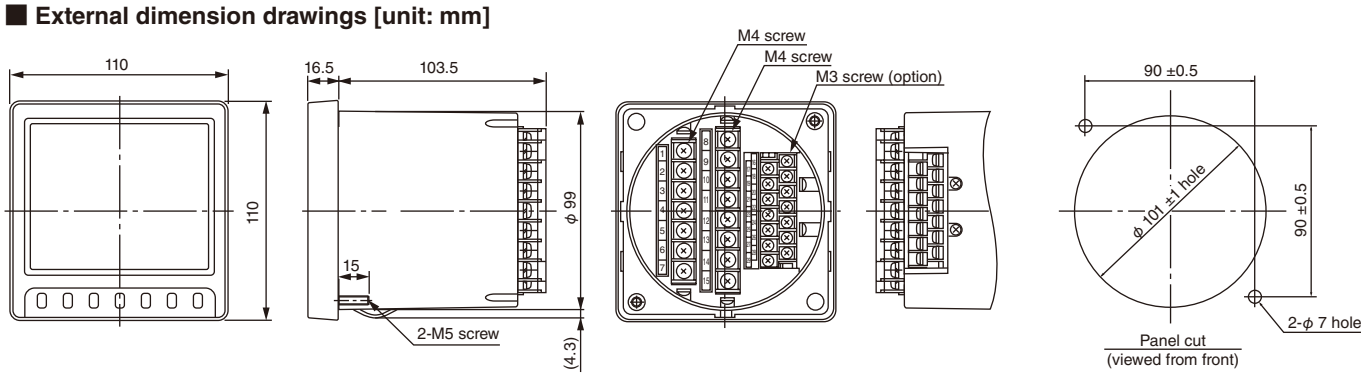

● Handling precautions

Installation: The contrast of LCDs differs depending on the angle at which they are viewed. Install in the position that will result in the optimum angle.

(1) For upper level installation

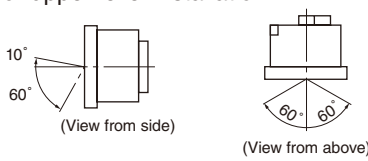

(View from side) (View from above)

(2) For lower level installation

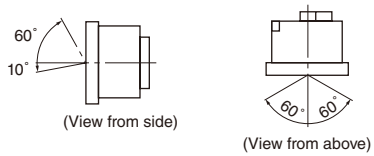

(View from side) (View from above)

■ Wiring diagrams *2

● Ammeter WE1SA

(1) 1ϕ 2W, analog output

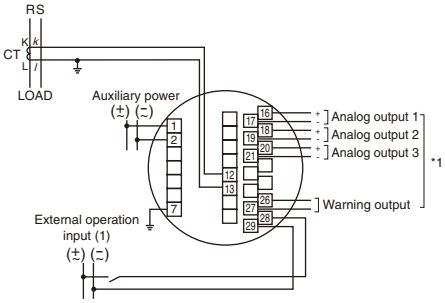

(2) 1ϕ 3W, analog output

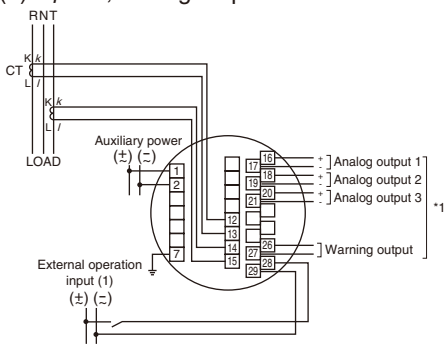

(3) 3ϕ 3W, analog output

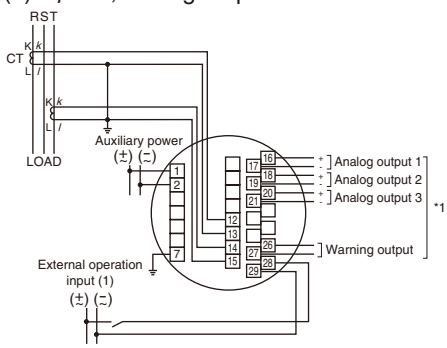

● Voltmeter WE1SV

(1) 1ϕ 2W, analog output

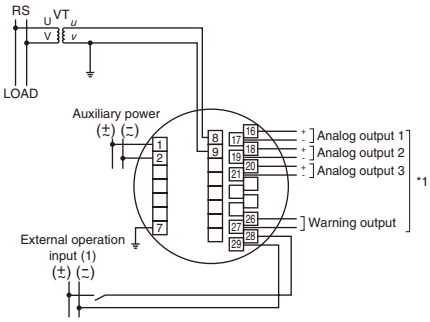

(2) 1ϕ 3W, analog output

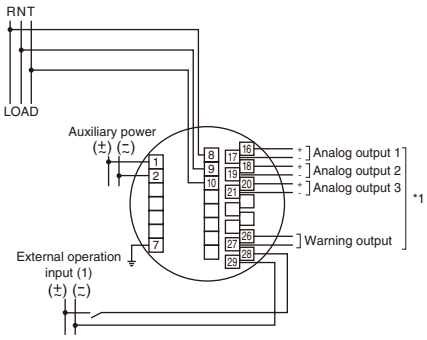

(3) 3ϕ 3W, analog output

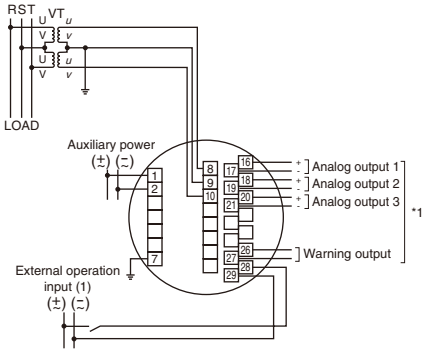

Note: *1 Analog output, warning output, and external operation input are options.

*2 Ammeters: CT secondary side grounding is unnecessary for low-voltage circuits.
Voltmeters: VT secondary side grounding is unnecessary for low-voltage circuits. Furthermore, VT is unnecessary if using with 110 V or 220 V direct input.

● Wiring precautions

(1) In the interests of safety, be sure to attach the terminal cover provided after wiring work is complete.
(2) Be sure to separate input and output side wiring, and take external noise into consideration (malfunction prevention).
(3) Be sure to ground earthing terminal E (terminal No. 7) to improve the shielding effect. Furthermore, ensure that the grounding resistance between the earthing terminal and ground is 100 Ω or less.
(4) Ensure that the distance between this product and circuit breakers, and relay contact signal lines is 30 cm or greater.
(5) When sending analog output over a distance directly, this product requires no protection even if there is a fear of the transmission line being affected by induced lightning surges, etc.
Note that to protect devices at the receiver side, install a surge protection device between lines, or an SPD (lightning arrester), etc. of approximately 500 V between the transmission line and ground at the receiver side. Refer to “Fuji Surge Countermeasure Devices” (catalog No. HS184) for details on SPDs.
(6) If connecting an inductive load to the warning output, it is recommended that an external surge suppressor be installed.
The contact life expectancy will be shorter without a surge suppressor.

Switchboard Instruments
Maximum / Minimum Multi-meter WE1GL type

Voltage elements including zero phase can be measured, and ground phases can be distinguished at the ground phase detection display screen

■ Features

- Maximum zero phase voltage, zero phase voltage, three-phase voltage (RN, SN, TN, RS, ST, TR) and frequency can be measured and monitored with a single unit.
- The response time can be set for maximum zero phase voltage. (0.05 to 5 sec)
- The line voltage demand value can be measured by setting the time limit.
- WE1GL is equipped with a function for automatically switching to the ground phase detection display screen by setting the zero phase voltage upper limit. Furthermore, ground phase can be distinguished from each phase voltage.
- The measurement display can display a single bar graph point and 4 digital measurement points simultaneously.
- The analog output 4 circuit and warning output 2 circuit can be extracted. (specified by customer)
  Note that output elements can be selected in settings.
- The display backlight brightness can be selected from 5 levels (1 to 5).

■ Model / type

Measurement element	Input specifications		Type
	Input circuit	Input range	
Max. zero phase voltage, zero phase voltage, three-phase voltage (interphase) , frequency	Phase voltage input	150/√3 V, Vo = 259 V, 150 V common use	**WE1GL-□1F□□-000**
		150/√3 V, Vo = 259 V	**WE1GL-□11□□-000**
		150/√3 V, Vo = 150 V	**WE1GL-□12□□-000**
	Line voltage input	150 V, Vo = 259 V	**WE1GL-□23□□-000**
		150 V, Vo = 150 V	**WE1GL-□24□□-000**

* Displayed price does not include options.

■ Type number nomenclature

WE1GL - □ □ □ □ □ - □ □ □

(1) Basic type

(2) Hard model

D	Phase indication R-S-T-N Japanese spec. White backlight
E	Phase indication R-Y-B-W English spec. White backlight

(3) Input circuit

1	<Phase voltage input specification> Three-phase voltage EVT secondary (phase voltage) (RN, SN, TN) Zero-phase voltage EVT tertiary (Vo)	2	<Line voltage input specification> Three-phase line voltage VT secondary (line) or EVT secondary (line) (RS, ST, TR) Zero-phase voltage EVT tertiary (Vo)

(4) Input range

F	150/√3 V, Vo = 259 V, 150 V common use	3	150 V, Vo = 259 V
1	150/√3 V, Vo = 259 V	4	150 V, Vo = 150 V
2	150/√3 V, Vo = 150 V	Z	Special specification (specified by customer)

(5) Auxiliary power

1	Used for 85 to 264 VAC and 80 to 143 VDC
2	20 to 56 VDC

(6) LCD viewing angle direction

1	For upper level installation (downward)
2	For lower level installation (upward)

(7) Analog output

0	None
Analog output 4 circuit	
1	4 to 20 mA DC
2	0 to 1 mA DC
3	1 to 5 VDC
4	0 to 5 VDC
5	0 to 10 VDC

(8) Contact output 2 circuit

0	None
1	Warning x 2

(9) External operation input

0	None
1	Circuit 2

Fuji Electric FA Components & Systems Co., Ltd.
Information subject to change without notice

■ Specifications, performance

● Input rating

Input rating	Phase voltage input	Zero phase voltage (EVT tertiary), 110, 190 VAC common use Three-phase voltage (EVT secondary) 110/√3 VAC 50/60 Hz EVT secondary: VRN, VSN, VTN EVT tertiary (Vo): Vaf
	Line voltage input	Zero phase voltage (EVT tertiary), 110, 190 VAC common use Three-phase voltage (VT/EVT secondary) 110 VAC 50/60 Hz VT/EVT secondary: VRS, VST, VTR EVT tertiary (Vo): Vaf

● Measurement specifications

Item	Measurement element	Measurement range/display specifications *1	Intrinsic error *2		Remarks
			Digital display	Analog display	
Measurement specifications	Voltage (line voltage)	Instantaneous (demand when time limit setting other than 0 s), max., min. 150 to 750.0 kVAC (34 ranges)	±1.0%	±0.5%	Time limit measurement possible by setting RS-ST-TR line switching
	Voltage (phase voltage) *3	Instantaneous, max., min. 150 to 750.0 kVAC (34 ranges)	±1.0%	±0.5%	RN-SN-TN phase switching RN-SN-TN phase when detecting zero phase voltage Displays ground phase from voltage *5 Response time setting possible
	Zero phase voltage *4	Instantaneous, max., min. 150 to 750.0 kVAC (34 ranges)	±1.0%	±0.5%	Response time setting possible
	Frequency	Instantaneous, max., min. 45 to 55 Hz, or 55 to 65 Hz, or 45 to 65 Hz range selection	±0.5%	±0.5%	0.0 Hz if input is less than 20% of voltage range.
Operation method		Voltage (phase voltage/line voltage) : effective value calculation method Demand voltmeter (line voltage) : calculation method based on thermal type Zero-phase voltage : fundamental wave effective value calculation method Frequency : zero-cross period calculation method			
Response time setting		Max. zero-phase voltage Ground phase detection function	0.05 s/0.1 s/0.15 s/0.2 s/0.5 s/1 s/2 s/3 s/5 s (90% response)		
Time limit setting		Voltage (line voltage)	0 s/5 s/10 s/20 s/30 s/40 s/50 s/1 m/2 m/3 m/4 m/5 m/6 m/7 m/8 m/9 m/ 10 m/15 m/20 m/25 m/30 m (95% time limit)		
Bar graph display		The main monitor element is a bar graph display. The sub monitor display element can also be displayed by setting.			
Option		Analog output (4 circuits), warning outputs (2), external operation inputs (2)			

(Note) *1 Instantaneous values for all measurement elements can be checked at the instantaneous measurement display. Furthermore, maximum and minimum values can be checked at the maximum and minimum measurement display.
However, maximum zero phase voltage can be checked at the instantaneous measurement display.
*2 The operating principle is such that the error increases if the next inverter output is measured directly. Cycle control, SCR phase-angle control, PWM control.
*3 The display is OFF on line voltage input products.
*4 If measuring zero phase voltage, be sure to carry out three-phase voltage wiring. The error may increase if measuring zero phase voltage only
*5 The ground phase is the minimum phase of the RN-SN-TN phase voltage. When detecting zero phase voltage, however, the minimum values for RN-SN-TN will all be 0 V when the upstream circuit breaker turns OFF, and therefore the ground phase should be checked based on the RN-SN-TN phase voltage maximum value.

● Measurement range

Measurement element	Input	Measurement range		Remarks
		Display	Analog output	
Voltage	0 to 150/√3 VAC (phase voltage input specification) 0 to 150 VAC (line voltage input specification)	101% of meter full scale	101% of output span	-
Zero-phase voltage	0 to 150 VAC (0 to 110 VAC) 0 to 259 VAC (0 to 190 VAC)	101% of meter full scale	101% of output span	-
Frequency	45 to 55 Hz	44.9 to 55.1 Hz	-1%, 101% of output span	-
	55 to 65 Hz	54.9 to 65.1 Hz		
	45 to 65 Hz	44.8 to 65.2 Hz		

Switchboard Instruments
Maximum / Minimum Multi-meter WE1GL type

● Standard specifications, performance

Item	Specifications		
Intrinsic error	See “Intrinsic error” in “Measurement specifications” on previous page.		
Bar graph tolerance	±10% (% of span)		
Temperature influence	Within tolerance at 23 ±10°C		
Conforming standards	JIS C 1102-1, -2, -4, -7, :1997, JIS C 1111:1989		
Display update time	Approx. 1 s (bar graph: 0.25 s)		
Display element/ configuration	LCD	Main monitor	Character height: 11 mm, 5 digits
		Sub monitor (left)	Character height: 6 mm, 4 digits
		Sub monitor (center), (right)	Character height: 6 mm, 5 digits
		Bar graph	20 dots
LCD viewing angle	Standard product	For upper level installation (downward)	Up direction 10°, down direction 60°, left/right directions 60°
	Special product	For lower level installation (upward)	Up direction 60°, down direction 10°, left/right directions 60°
Backlight	LED backlight: white Can be set to always on, auto off (after 5 minutes of no operation), or always off Brightness can be selected from 5 levels (1 to 5) (default: 3) * Characteristics of LED are such that color tone (color) may differ for each product.		
Power supply range and consumption VA	(1) 85 to 264 VAC 50/60 Hz, 10 VA (rated voltage: 100/110 VAC, 200/220 VAC) 80 to 143 VDC 6 W (rated voltage: 100/110 VDC) , uses both AC/DC		
	(2) 20 to 56 VDC 6 W (rated voltage: 24/48 VDC)		
Inrush current (time constant)	Rated voltage: 110 VAC 2.2 A or less (approx. 3.6 ms)		
	Rated voltage: 220 VAC 4.4 A or less (approx. 3.6 ms)		
	Rated voltage: 110 VDC 1.6 A or less (approx. 3.6 ms)		
	Rated voltage: 24 VDC 5.0 A or less (approx. 2.0 ms)		
	Rated voltage: 48 VDC 9.9 A or less (approx. 2.0 ms)		
Input consumption VA	Voltage circuit	0.05 VA or less (110/$\sqrt{3}$ V), 0.1 VA or less (110 V)	
	Zero-phase voltage circuit	0.5 VA or less (190 V)	
Overload capacity	Voltage circuit	2 times rated voltage for 10 seconds, 1.2 times continuously	
	Auxiliary power	1.5 times rated voltage for 10 seconds, 1.2 times continuously 1.5 times rated voltage for 10 seconds, 1.3 times continuously at 110 VDC	
Insulation resistance JIS C 1102-1 JIS C 1111	Between collective electric circuits and outer case (ground)		50 MΩ or more with 500 VDC megohmmeter
	Between inputs, outputs, auxiliary power		
	Between AC inputs (three-phase voltage, zero phase voltage)		
	Between outputs (analog, warning)		
	Between warning outputs		
	No insulation between analog outputs (negative common)		
Withstand voltage JIS C 1102-1 JIS C 1111	Between collective electric circuits and outer case (ground)		2000 VAC (50/60 Hz), 1 minute
	Between inputs, outputs, auxiliary power		
	Between AC inputs (three-phase voltage, zero phase voltage)		
	Between outputs (analog, warning)		1500 VAC (50/60 Hz), 1 minute
	Between warning outputs		
	No insulation between analog outputs (negative common)		
Lightning impulse withstand voltage JIS C 1111	Between collective electric circuits (excl. analog outputs) and outer case (ground)		5 kV 1.2/50 μs, positive and negative polarity, 3 times each
	Between analog output and outer case (ground)		
Noise tolerance ANSI C37.90a Power standard B-402 IEC801-2	(1) Oscillatory surge voltage There should be no malfunctioning when attenuating oscillatory wave form of 1 to 1.5 MHz, peak voltage of 2.5 to 3 kV is applied repeatedly. Voltage input circuit (normal/common), power supply circuit (normal/common) (2) Square-wave impulse noise There should be no malfunctioning when 1 μs, 100 ns width noise is applied repeatedly for 5 minutes. Power supply circuit (common/normal) 1500 V or more Operation input (common) 1000 V or more Voltage input circuit (common/normal) 1500 V or more Analog output circuit (induction) 1000 V or more Warning output (common) 1000 V or more (3) Radio wave noise: Measurement error should be within ±10%, and there should be no malfunctioning when 150, 400, and 900 MHz band radio waves are irradiated intermittently at 5 W, 1 m, and when mobile phone radio waves are irradiated intermittently at 1 m. (4) Electrostatic noise Measurement error should be within 10% at 8 kV when power is on. There should be no damage at 10 kV when power is off. (capacitor charging method)		
Vibration, shock JIS C 1102-1 JIS C 0040, JIS C 0041	Vibration: one-way amplitude of 0.15 mm, 10 to 55 Hz, 5 sweeps at 1 octave every minute Shock: 490 m/s^2 in X, Y, and Z directions, 3 times each		
Power failure guarantee	Max. value, min. value, ground phase detection display, all setting value data retained in non-volatile memory		
Operating temperature and humidity range	-10 to +55°C, 30 to 85% RH, there should be no condensation		
Storage temperature range	-25 to +70°C		

● Options (specified by customer)

Item	Specifications			
Analog output	Number of outputs	4 circuits		
	Output specifications	4 to 20 mA DC (550 Ω or less) 0 to 1 mA DC (10 kΩ or less) 0 to 5 VDC/1 to 5 V (600 Ω or more) 0 to 10 VDC (2 kΩ or more) Specify any of the above with the same rating.		
	Output elements	Phase voltage (RN-SN-TN), line voltage (RS-ST-TR), frequency, max. zero phase voltage, zero phase voltage However, phase voltage (RN-SN-TN) applies only to phase voltage input products.		
	Response time	Max. zero phase voltage, zero phase voltage, voltage (RN-SN-TN): response time setting + 1 s or less Voltage (RS-ST-TR), frequency: 1 s or less (time until within ±1% of final steady-state value)		
	Low-input cut	When input is equal to or less than the cut value, output is fixed at the lower limit value (option can be turned ON/OFF in settings). However, this does not apply in the case of frequency. Low-input cut value Zero phase voltage: 1.0% of full scale or less Voltage: 0.5% of full scale or less		
	Output ripple	Within 2 times intrinsic error (% of output span)		
	Output adjustment	Bias, span adjustment possible for each individual output		
		Adjustable range	Bias	±10.0% (0.1% steps), % of output span
			Span	±10.0% (0.1% steps), % of output span
	No insulation between outputs (negative common)			
Warning output	Warning element: zero phase voltage, line voltage (max. value or min. value for each line), or warning OFF can be set (2 warning circuits can be set individually) Reset method: auto reset or manual reset (setting) Output contact: non-voltage contact a Contact capacity: 250 VAC 8 A, 125 VDC 0.3 A (resistive load), 250 VAC 2 A, 125 VDC 0.1 A (inductive load)			
	Warning element	Item	Specifications	
	Zero-phase voltage	Functions	Warning display, warning output at measurement value ≥ upper limit setting value Equipped with function for automatically switching to ground phase detection display when detecting. (It is possible to set whether or not to use ground phase detection display automatic switching function.)	
			Ground phase detection display: Displays the maximum zero phase voltage and minimum phase voltage. Max. zero phase and min. phase voltages are updated even after zero phase voltage detection. Turns off again (when backlight set to turn off automatically) following 5 minutes of no operation after backlight turns on automatically	
		Setting accuracy	±1.0% (% of full scale)	
		Setting range	5 to 150% with full scale of 150% (1% steps), or OFF (not used)	
	Line voltage (max. value or min. value for each line)	Functions	Warning display, warning output at measurement value ≥ upper limit setting value (detection at max. phase) Warning display, warning output at measurement value ≤ lower limit setting value (detection at min. phase)	
		Setting accuracy	±1.0% (% of full scale)	
		Setting range	30 to 150% with full scale of 150% (1% steps), or OFF (not used)	
External operation input	Number of points		2 circuits, functions (4 types) changed in settings	
	Functions		In addition to switch operation, the following four function types can be used by applying external voltage signals.	
		Warning reset	Resets the warning output (output off).	
		Max. / min. reset	Resets the maximum / minimum values (updated to instantaneous value at that point).	
		Measurement element switching	Changes the main monitor measurement display element.	
		Phase switching	Changes the phase/line display for all displayed voltages.	
	Min. operation pulse width		300 ms, continuous application possible	
	Input rating		The input rating is the same as that for auxiliary power. (1) 100/110 VAC 0.4 VA, 200/220 VAC 1.4 VA, 100/110 VDC 0.4 W, uses both AC/DC Contact capacity: approx. 3 mA (100/110 VAC/DC), approx. 6 mA (200/220 VAC) (2) 24 VDC 0.3 W, 48 VDC 1.2 W Contact capacity: approx. 10 mA (24 VDC), approx. 20 mA (48 VDC)	

● Precautions for using external display switching input (option)

External power consumption is 0.4 VA at 110 VAC, 0.4 W at 110 VDC, and 1.4 VA at 220 VAC.
If using relays or switches to supply power, use products with minimum applicable load of approximately 1 mA.

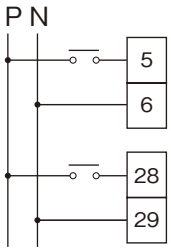

Switchboard Instruments
Maximum / Minimum Multi-meter WE1GL type

■ Measurement range

● Voltage measurement range (34 ranges) *1, *2

150.0 V	(110 V)	4500 V	(3300 V)	150.0 kV	(110 kV)
150 V	(110 V)	4.50 kV	(3300 V)	180.0 kV	(132 kV)
300.0 V	(220 V)	9000 V	(6600 V)	210.0 kV	(154 kV)
300 V	(220 V)	9.00 kV	(6600 V)	270.0 kV	(187 kV)
500 V	(380 V)	15.00 kV	(11 kV)	300.0 kV	(220 kV)
600 V	(440 V)	18.00 kV	(13.2 kV)	400.0 kV	(275 kV)
600 V	(460 V)	18.00 kV	(13.8 kV)	500.0 kV	(380 kV)
600 V	(480 V)	24.00 kV	(16.5 kV)	750.0 kV	(550 kV)
1200 V	(880 V)	25.00 kV	(18.4 kV)		
1500 V	(1100 V)	30.0 kV	(22 kV)		
2400 V	(1650 V)	45.0 kV	(33 kV)		
3000 V	(2200 V)	90.0 kV	(66 kV)		
3.00 kV	(2200 V)	120.0 kV	(77 kV)		

*1 The values outside parentheses ( ) are the bar graph full scale.
*2 The values inside parentheses are values corresponding to (/110 V) or (/190 V).

● Zero phase voltage scale

(Set x1/√3 V Yes/No at the zero phase voltage scale display.)

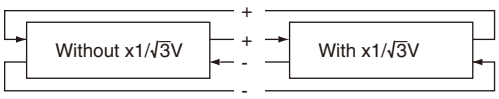

■ Ground phase detection screen automatic switching

D1

Instantaneous measurement display screen

Automatic switching when detecting ground phase is possible by specified in settings

If the backlight setting is "Auto OFF" , and the display switches automatically to the ground phase detection display when detecting ground phase, the backlight will turn on simultaneously when the screen changes.

(With line voltage input specification, only zero phase voltage detection is performed, and it is not possible to verify phase voltage measurement or the ground phase.)

Automatic switching

Ground phase detection

MAX/MIN

MODE

Max., min. measurement display screen

Ground phase detection

MODE

Ground phase detection display screen

Turns on if ground phase detection displayed

Backlight ON (when Auto OFF set)

• Display element

Main monitor	Max. zero-phase voltage
Sub monitor (left)	Min. V (RN)
Sub monitor (center)	Min. V (SN)
Sub monitor (right)	Min. V (TN)

Each minimum phase voltage will be OFF on line voltage input products.

It is possible to switch between measurement elements with the + or - buttons

The ground phase is the minimum phase of each minimum phase voltage (V_{RN}, V_{SN}, V_{TN}).

Fuji Electric FA Components & Systems Co., Ltd.
Information subject to change without notice

■ Name and function of each part

Digital display area
4 elements can be measured and monitored simultaneously.

Sub monitor (left) Sub monitor (center) Main monitor Sub monitor (right)

Scale value
This is set automatically in the measurement range settings.

MODE
This button is used to change between the normal measurement display and ground phase detection display.
In setting mode, this is used as a button for changing the setting item.

Instantaneous measurement display or max., min. measurement display → MODE → Ground phase detection display → MODE

RESET/ SHIFT
This button is used to reset all kinds of warning.
It can also be used to reset maximum and minimum values when in max., min. measurement display.
In setting mode, this is used as a button for moving setting items.

SET
This button is used to change to setting mode.
Hold down for 3 seconds or longer to change to setting mode.
In setting mode, this is used as a button for configuring the setting value.

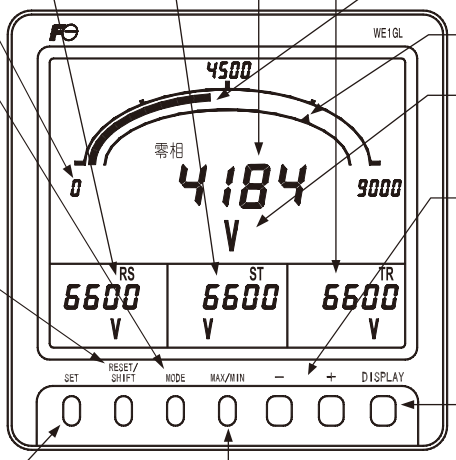

MAX/MIN
This button is used to change between the instantaneous measurement display and max., min. measurement display.

Bar graph display area
Main monitor measurement values can be displayed in analog format.
(Sub monitor measurement values can be set to display in bar graph format also.)

Upper limit (or lower limit) setting index
Displays the upper limit (or lower limit) setting value.

Unit display
This is set automatically in the measurement range settings.

- +
This button is used to change the main monitor measurement display element.
After changing the display, it will return to the original measurement display element after 10 minutes of no operation. In setting mode, this is used as a button for changing setting values.

DISPLAY
This button is used to change the voltage phase (line) display.
After changing the display, it will return to the original phase (line) display after 10 minutes of no operation. In setting mode, this is used as a button to exit setting mode.

Instantaneous measurement display → MAX/MIN → Max., min. measurement display → MAX/MIN

D1

■ External connection diagrams

(1) If three-phase voltage input with phase voltage

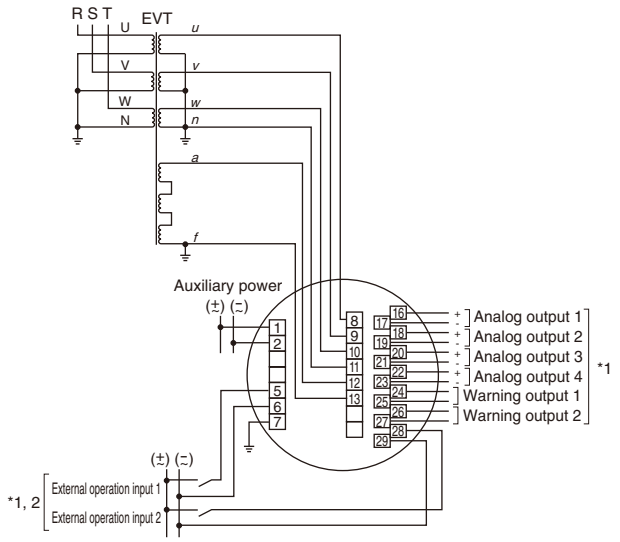

(2) If three-phase voltage input in line voltage (S phase grounding)

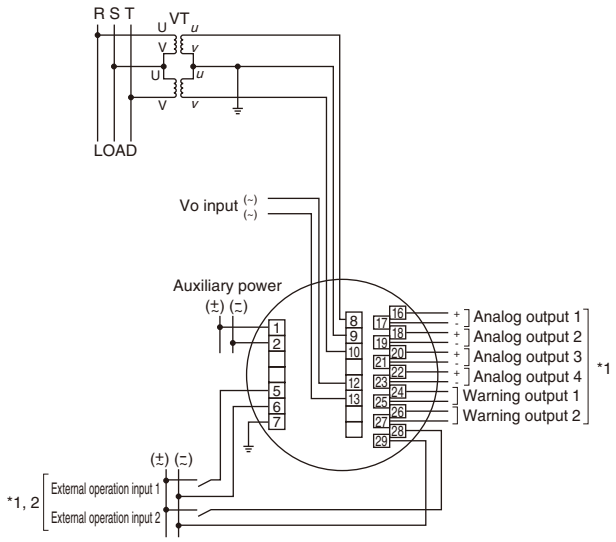

*1 Analog output, warning output, and external operation input are all options.
*2 External operation input can be changed to an external reset function or external display switching function by specifying in the settings.
* Refer to the following page for wiring precautions.

Switchboard Instruments
Maximum / Minimum Multi-meter WE1GL type

■ Wiring precautions

(1) In the interests of safety, be sure to attach the terminal cover after wiring work is complete.
(2) Be sure to separate input and output side wiring, and take external noise into consideration (malfunction prevention).
(3) Be sure to ground earthing terminal E (terminal No. 7) to improve the shielding effect.
Furthermore, ensure that the grounding resistance between the earthing terminal and ground is 100 Ω or less.
(4) Ensure that the distance between this product and circuit breakers, and relay contact signal lines is 30 cm or more.
(5) When sending analog output over a distance directly, this product requires no protection even if there is a fear of the transmission line being affected by induced lightning surges, etc.
Note that to protect devices at the receiver side, install a surge protection device between lines, or an arrester, etc. of approximately 500 V between the transmission line and ground at the receiver side.
Refer to “Fuji Surge Countermeasure Devices, Fuji SPDs” (catalog No. HS189) for details on SPDs.
(6) If connecting an inductive load to the warning output, it is recommended that an external surge suppressor be installed.
The contact life expectancy will be shorter without a surge suppressor.

■ External dimension drawings, installation precautions

● External dimension drawings (unit: mm)

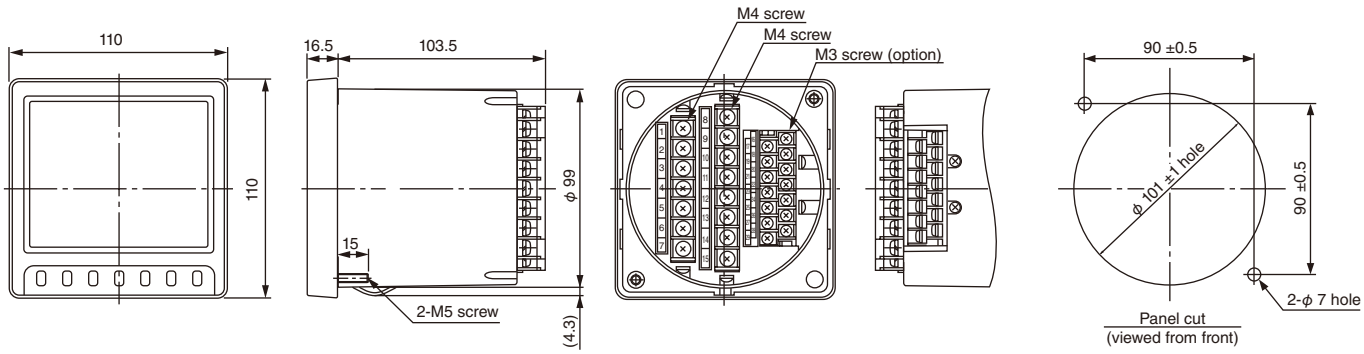

● Handling precautions

(1) The contrast of LCDs differs depending on the angle at which they are viewed, and so should be installed in the position that will result in the optimum angle.

● For upper level installation

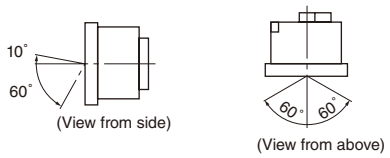

● For lower level installation

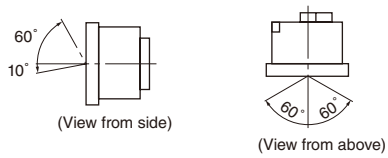

(2) Ensure that the installation panel thickness is 10 mm or less, and install using the M5 nuts provided.
(3) Apply tightening torque of 2.75 to 3.82 N·m.

● Installation

(1) Insert the product into the hole cut in the panel from the front.
When doing so, insert firmly until it contacts the stoppers used to prevent the bottom of the base from coming out.
The product is equipped with stoppers to prevent it coming out when installed.
(2) Secure the product firmly using the installation M5 flange nuts provided.
Apply tightening torque of 2.75 to 3.82 N·m to the flange nuts.

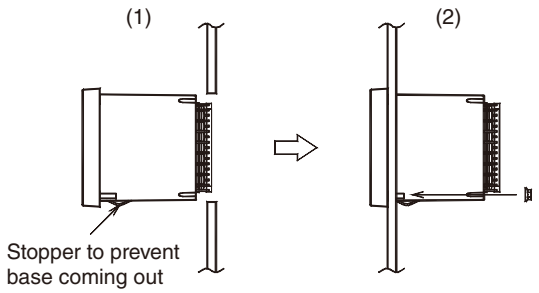

Switchboard Instruments
DC Receiving Meter, DC Input Meter WE1B/1C type

Ideal for measurement of DC power panel, wind power or solar power generation DC circuits

■ Features

- Three measurements can be displayed simultaneously with a single unit.
- With scaling function allowing full scale to be set to the required value.
- Calculates, displays, and outputs DC power (W) and DC electric energy (Wh) from DC current and DC voltage measurement values.
- Provides insulation for 2000 VAC between inputs, and 2000 VAC between inputs and outputs.
- Bar graph display (1 measurement) offers analog meter style view.
- Maximum and minimum values can be retained.
- Upper and lower limit flicker can be set (with setting index), can be used as control index with flicker function OFF.
- Manufacture possible with up to 3 analog outputs (option).
- 3 analog output circuits or communication output RS-485 available for output. (option)
- 2 analog output circuits + 1 pulse output circuit is also possible. (WE1C, option)
- External operation input is possible. (Max. value, min. value reset: option)
- Uses both AC/DC power supply of 85 to 253 VAC or 80 to 143 VDC.
  20 to 56 VDC products can also be manufactured, offering support for a wide power supply range.
- Compatible with conventional 110 degree mechanical meters and installation method. (Installed at two points on opposite corners.)
- Model with no backlight that can be viewed easily in natural light, and model with backlight for easy viewing in electrical rooms, etc. available
- The backlight brightness can be selected from 5 levels (1 to 5).

WE1B WE1C

■ Model/type

Product name	Input circuit	Type (= product code)
DC receiving meter	1	**WE1B-1**□□□□□**0**
	2	**WE1B-2**□□□□□**0**
	3	**WE1B-3**□□□□□**0**

Product name	Input circuit	Type (= product code)
DC input meter	1	**WE1C-**□**00**□□□□
	2	**WE1C-**□□**0**□□□□
	3	**WE1C-**□□□□□□□□

* Indicated price does not include backlight or option outputs.

■ Specifications

WE1B (DC receiving meter)

Item	Specifications			
Number of input circuits	Max. 3 circuits (insulation at 2000 VAC between circuits)			
Input range	Code	Input	Input resistance	Remarks
	15	1 to 5 VDC	Approx. 1 MΩ	**The input rating is the same for the 3 circuits (max.).** Ex.) Input 1: 4 to 20 mA Input 2: 4 to 20 mA Input 3: 4 to 20 mA
	12	0 to 1 VDC	Approx. 1 MΩ	
	13	0 to 5 VDC	Approx. 1 MΩ	
	14	0 to 10 VDC	Approx. 1 MΩ	
	16	4 to 20 mA DC	Approx. 50 Ω	
	28	0 to 1 mA DC	Approx. 1 kΩ	
	29	0 to 5 mA DC	Approx. 200 Ω	
	30	0 to 10 mA DC	Approx. 100 Ω	
	31	0 to 16 mA DC	Approx. 50 Ω	
	22	0 to 20 mA DC	Approx. 50 Ω	

WE1C (DC input meter)

Item	Specifications		
Number of input circuits	Max. 3 circuits (insulation at 2000 VAC between circuits)		
Input range	Code	Input	Input resistance
	0	No input	-
	1	0 to 50 mVDC	Approx. 1 MΩ
	2	0 to 60 mVDC	
	3	0 to 100 mVDC	
	4	0 to 50 VDC	
	5	0 to 75 VDC	
	6	0 to 100 VDC	
	7	0 to 150 VDC	
	8	0 to 200 VDC	
	9	0 to 1 mA DC	Approx. 1 kΩ

* DC power (W) and DC electric energy (Wh) can be calculated, displayed, and output from DC current and DC voltage measurement values. (See P34)

Switchboard Instruments
DC Receiving Meter, DC Input Meter WE1B/1C type

■ Type number nomenclature

WE1B - □ □□ □ □ □ 0

Basic type
DC receiving meter

Number of input signals

Number of input signals	Code
1	1
2	2
3	3

Input signal

Input signal	Code
0 to 1 VDC	12
0 to 5 VDC	13
0 to 10 VDC	14
1 to 5 VDC	15
4 to 20 mA DC	16
0 to 20 mA DC	22
0 to 1 mA DC	28
0 to 5 mA DC	29
0 to 10 mA DC	30
0 to 16 mA DC	31

Analog output (option)

Analog output	Code
None	0
4 to 20 mA DC	1
0 to 1 mA DC	2
1 to 5 VDC	3
0 to 5 VDC	4
0 to 10 VDC	5
RS-485 communication output	A

(Note) The number of analog outputs is the same as the number of inputs.

Backlight, external operation input (option)

Backlight, external operation input	Code
Without backlight, without external operation input	0
Without backlight, with external operation input	1
With backlight (white), without external operation input	D
With backlight (white), with external operation input	E

Auxiliary power

Auxiliary power	Code
Both 85 to 253 VAC/80 to 143 VDC	1
20 to 56 VDC	2

WE1C - □□□ □ □ □ □

Basic type
DC input meter

Input signal

Input signal	Code
None	0
0 to 50 mVDC	1
0 to 60 mVDC	2
0 to 100 mVDC	3
0 to 50 VDC	4
0 to 75 VDC	5
0 to 100 VDC	6
0 to 150 VDC	7
0 to 200 VDC	8
0 to 1 mA DC	9
±301 to ±600 VDC	Y * It is necessary to specify voltage. (Note 1)

No. 1 input

No. 2 input

No. 3 input

■DC power (W), DC electric energy (Wh)(Note 2)

No. 1 input (current specification)

0 to 50 mVDC	1
0 to 60 mVDC	2
0 to 100 mVDC	3

Above is for shunt output (sold separately)

* No. 1 input

No. 2 input (voltage specification)

0 to 50 VDC	4
0 to 75 VDC	5
0 to 100 VDC	6
0 to 150 VDC	7
0 to 200 VDC	8
±301 to ±600 VDC	Y * It is necessary to specify voltage. (Note 1)

* No. 2 input

Input 3 (W, Wh specification)

DC W measurement	W
DC Wh measurement	

* No. 3input

* Specify * mark (No. ■ input) if placing an order for DC power, DC electric energy.

Pulse output (option)(Note 3)

None	0
Contact a for 1 output (photo MOS relay)	1

(Note 3) This optional is for DC electric energy measurement.

Analog output (option)

Analog output	Code
None	0
4 to 20 mA DC	1
0 to 1 mA DC	2
1 to 5 VDC	3
0 to 5 VDC	4
0 to 10 VDC	5
RS-485 communication output	A

(Note) The number of analog outputs is the same as the number of inputs.

Backlight, external display switching input (option)

Backlight, external operation input	Code
Without backlight, without external operation input	0
Without backlight, with external operation input	1
With backlight (white), without external operation input	D
With backlight (white), with external operation input	E

Auxiliary power

Auxiliary power	Code
Both 85 to 253 VAC/80 to 143 VDC	1
20 to 56 VDC	2

(Note 1) The series resistor provided (DM-1) is installed externally for voltage input of ±301 V or higher.
(See P47 for DM-1 external dimensions)
(Note 2) Display combination (see P39)
DC power (W): Specify from pattern 7 to C.
DC electric energy (Wh): Specify from pattern D to J.

■ Name and function of each part

Bar graph display area
Measurement values are displayed in analog format. The measurement element displayed in the bar graph can be changed by pressing the DISPLAY button.

Flicker setting index
(Can be used as control index with flicker function OFF)

-
This button is used to verify the flicker value. The display returns from the flicker value display to display mode following no operation for 10 seconds or longer. In setting mode, this is used to lower setting values.

SET
This button is used to change to setting mode. When ON continuously for 3 seconds or longer, the mode changes from display mode to setting mode 1. In setting mode, this is used as a button for configuring the setting value.

+
This button is used to verify maximum and minimum values for all inputs.
It changes in the order maximum value → minimum value. The display returns from the maximum and minimum value display to display mode following no operation for 10 minutes. In setting mode, this is used to advance setting values. This can be switched with the function for DISPLAY in the settings.

Digital display area
3 elements can be measured and monitored simultaneously.

Sub monitor (left) (Input 2) **Main monitor** (Input 1) **Sub monitor (right)** (Input 3)

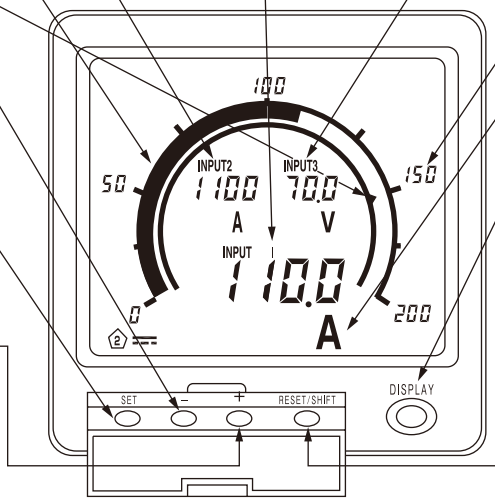

Input 1 circuit: INPUT1 displayed only
Input 2 circuit: INPUT1, 2 displayed only
Input 3 circuit: INPUT1, 2, 3 displayed

Scale value
This is set automatically with the display scaling settings.

Unit display
The unit can be set in the unit display settings.

DISPLAY
This button is used to change the input element displayed in the bar graph.
→INPUT1 → INPUT2 → INPUT3
Hold down together with the SET button for 3 seconds or longer to change from display mode to setting mode 2.
This can be switched with the function for the + button in the settings.
The mode returns from setting mode to display mode with a single action.

RESET/SHIFT
This button is used to reset retained maximum and minimum values.
When ON continuously for 1 second or longer, retained maximum and minimum values are reset. In setting mode, this is used to move items.

■ Operation

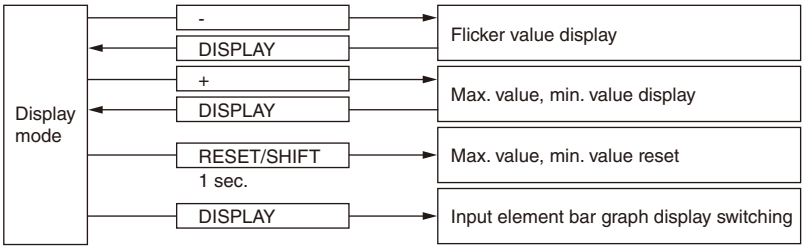

■ List of units

LCD (18 types)			Unit lettering display (56 types) *2							
	Main monitor	Sub monitor								
(1)	A	A	(1)	APm	(19)	L/h	(37)	Nm^3/min	(55)	°
(2)	kA	kA	(2)	bar	(20)	L/min	(38)	N/m^2	(56)	kWh
(3)	V	V	(3)	cm	(21)	mA	(39)	N/mm^2		
(4)	kV	kV	(4)	COS∅	(22)	mg/L	(40)	OPm		
(5)	W	-	(5)	ELm	(23)	min^{-1}	(41)	Pa		
(6)	kW	-	(6)	Hz	(24)	mL/min	(42)	pH		
(7)	MW	-	(7)	J	(25)	mm	(43)	ppm		
(8)	ºC	ºC	(8)	K	(26)	m/h *1	(44)	R		
(9)	%	%	(9)	kg	(27)	m/min *1	(45)	rad		
(10)	m	m	(10)	kg/h	(28)	m/s	(46)	rpm		
(11)	m^3	m^3	(11)	kg/m^2	(29)	mV	(47)	SPm		
(12)	m^3/h	m^3/h	(12)	kg/m^3	(30)	m^3/s	(48)	t		
(13)	m^3/min	m^3/min	(13)	kL	(31)	MPa	(49)	t/h		
(14)	m/h	-	(14)	kN	(32)	Mvar	(50)	TPm		
(15)	m/min	-	(15)	kPa	(33)	MW *1	(51)	W *1		
(16)	r/min	r/min	(16)	kvar	(34)	N	(52)	YPm		
(17)	min	min	(17)	kW *1	(35)	N·m	(53)	μm		
(18)	None	None	(18)	L	(36)	Nm^3/h	(54)	μS/cm		

(Note) *1 Lettering indication possible for the sub monitor only. The main monitor employs an LCD.
*2 The lettering character height is 8.5 mm for the main monitor, and 5 mm for the sub monitor. The character color is gray (DIC color guide 13th Edition 541). Please specify unit lettering when placing your order.

Switchboard Instruments
DC Receiving Meter, DC Input Meter WE1B/1C type

■ Performance

Item		Specifications			
Digital display tolerance		± 1.0 %			
Bar graph display tolerance		±5.0% (% of span)			
Temperature influence		Within tolerance at 23 ±10°C			
Conforming standards		JIS C 1102-1:1997 ····· Definitions and general requirements common to all parts JIS C 1102-2:1997 ····· Special requirements for ammeters and voltmeters JIS C 1102-7:1997 ····· Special requirements for multi-function instruments JIS C 1102-8:1997 ····· Special requirements for accessories JIS C 1102-9:1997 ····· Recommended test methods JIS C 1111:1989 ····· AC-DC transducers JIS C 1010-1:1998 ····· Safety requirements for electrical equipment			
Display update time		Approx. 1 s (bar graph: approx. 0.25 s)			
Display element/configuration		LCD	Main monitor	Character height: 10 mm, 4 digits	
			Sub monitor (left), (right)	Character height: 6 mm, 4 digits	
			Bar graph	30 dots	
Auxiliary power	Without backlight	(1) 85 to 253 VAC 10 VA (rated voltage: 100/110 VAC, 200/220 VAC) 80 to 143 VDC 5 W (rated voltage: 100/110 VDC), uses both AC/DC			Specify (1) or (2)
		(2) 20 to 56 VDC 6 W (rated voltage: 24/48 VDC)			
	With backlight	(1) 85 to 253 VAC 12 VA (rated voltage: 100/110 VAC, 200/220 VAC) 80 to 143 VDC 6 W (rated voltage: 100/110 VDC), uses both AC/DC			
		(2) 20 to 56 VDC 7 W (rated voltage: 24/48 VDC)			
	Inrush current (time constant)	Rated voltage: 110 VAC 5.2 A or less (approx. 1.7 ms) 220 VAC 10.4 A or less (approx. 1.7 ms)	110 VDC 3.7 A or less (approx. 1.7 ms) 24 VDC 5.5 A or less (approx. 3.6 ms) 48 VDC 10.9 A or less (approx. 3.6 ms)		
Backlight		LED backlight: white Can be set to always on, auto off (after 5 minutes of no operation), or always off Brightness can be selected from 5 levels (1 to 5) (default: 3) * Characteristics of LED are such that color tone (color) may differ for each product.			
Overload capacity		Voltage circuit	2 times rated voltage for 10 seconds, 1.2 times continuously		
		Current circuit	10 times rated current for 5 seconds, 1.2 times continuously		
		Auxiliary power	1.5 times rated voltage for 10 seconds, 1.2 times continuously 1.5 times rated voltage for 10 seconds, 1.3 times continuously at 110 VDC		
Insulation resistance		Between collective electric circuits and outer case (ground)			50 MΩ or more with 500 VDC megohmmeter
		Between inputs, outputs, auxiliary power			
		Between inputs			
		Between analog outputs			No insulation (negative common)
Withstand voltage		Between collective electric circuits and outer case (ground)			2000 VAC (50/60 Hz), 1 minute
		Between inputs, outputs, auxiliary power			
		Between inputs			
		Between analog outputs			No insulation (negative common)
Lightning impulse withstand voltage		Between collective electric circuits and outer case (ground)			5 kV 1.2/50 µs, positive and negative polarity, 3 times each
Noise tolerance		(1) Oscillatory surge voltage Error within ±10% when attenuating oscillatory wave form of 1 to 1.5 MHz, peak voltage of 2.5 to 3 kV applied repeatedly Voltage, current circuit (common) Power supply circuit (normal/common) (2) Square wave impulse noise Error within ±10% when 1 µs, 100 ns width noise applied repeatedly for 5 minutes Voltage, current circuit (common), 1.5 kV or more Current circuit (normal/common), 1.5 kV or more External operation input (common), 1.0 kV or more Analog output (induction), 1.0 kV or more (3) Radio wave noise Error within ±10% when 150, 400, and 900 MHz band radio waves irradiated intermittently at 5 W, 1 m, and when mobile phone radio waves irradiated intermittently at 1 m (4) Electrostatic noise Error within ±10% at 8 kV when power is on There should be no damage at 10 kV when power is off. (capacitor charging method)			
Vibration, shock		Vibration: one-way amplitude of 0.15 mm, 10 to 55 Hz, 5 sweeps at 1 octave every minute Shock: 490 m/s², 3 times in each direction			
Construction		Exterior: 110 x 110 x 105 mm [W x H x D], body diameter: φ99 mm, with terminal cover Case material: ABS (V-0), exterior color: black (Munsell N1.5), weight: approx. 520 g			
Power failure guarantee		Max. value, min. value, setting value, cumulative value (Wh) data retained in non-volatile memory			
Operating temperature and humidity range		-10 to 55°C, 30 to 85% RH, there should be no condensation			
Storage temperature range		-25 to 70°C			

■ Option specifications [products can be manufactured with the following inputs/outputs as specified by customer]

Item	Specifications	
Analog output	Number of output circuits	Max. 3 circuits
	Rating	4 to 20 mA DC (550 Ω or less) Specify any with the same rating. 0 to 1 mA DC (10 kΩ or less) 1 to 5 VDC (600 Ω or more) 0 to 5 VDC (600 Ω or more) 0 to 10 VDC (2 kΩ or more)
	Tolerance	± 0.5 %
	Response time	1 s or less (time until within ±1% of final steady-state value)
	Output ripple	1% of output span, P-P or less
	No insulation between outputs (negative common)	
External operation input	Input element	External reset x 1
	Input specifications	External reset: Maximum and minimum values can be reset by applying an external voltage signal. Input is the same rating as that for auxiliary power. (1) 100/110 VAC 0.4 VA, 200/220 VAC 1.4 VA, 100/110 VDC 0.4 W, uses both AC/DC Contact capacity: approx. 3 mA (100/110 VAC/DC), approx. 6 mA (200/220 VAC) (2) 24 VDC 0.3 W, 48 VDC 1.2 W Contact capacity: approx. 10 mA (24 VDC), approx. 20 mA (48 VDC)

● Communication output

Communication method	RS-485 half-duplex two wire system, start-stop synchronous system
Transmission speed	1200/2400/4800/9600 bps
Transmission code	NRZ
Start bit	1 bit
Data length	7/8 bits
Parity	None / even number / odd number
Stop bit	1 bit / 2 bits
Cable length	1000 m (total length)
Address	1 to 254
Number of connected units	Up to 31 units can be connected Use a repeater for 32 units or more (up to 254 units can be connected)
Transmission character	ASCII code

● Pulse output Output element: DC electric energy (Wh)

Output method	Optical MOS-FET relay contact 1a
Contact capacity	125 VAC/DC 70 mA (resistive load, inductive load)
Pulse width	250 ms ± 10 %
	This may be 100 to 130 ms depending on the range setting.

The output pulse unit can be set in the following ranges.

(Example)

When a multiplying factor of 1 is specified, the output pulse unit can be set to 0.01, 0.1, 1, or 10.

Multiplying factor	Output pulse unit (kWh/pulse)			
0.1	1	0.1	0.01	0.001
1	10	1	0.1	0.01
10	100	10	1	0.1
100	1000	100	10	1
1000	10000	1000	100	10

The multiplying factor setting range is limited based on the power scale (voltage x current).

Voltage (V) x current (A)	Multiplying factor setting range
Up to less than 100 kW	x0.1, x1, x10, x100, x1000
100 kW or higher to less than 1000 kW	x1, x10, x100, x1000
1000 kW or higher to less than 10000 kW	x10, x100, x1000
10000 kW or higher to less than 100000 kW	100, x1000

■ Installation

Refer to the following external dimension drawings and panel cut, and install on a panel of thickness 10 mm or less using the M5 flange nuts provided. Apply tightening torque of 2.75 to 3.82 N·m.

D1

■ External dimension drawings [unit: mm]

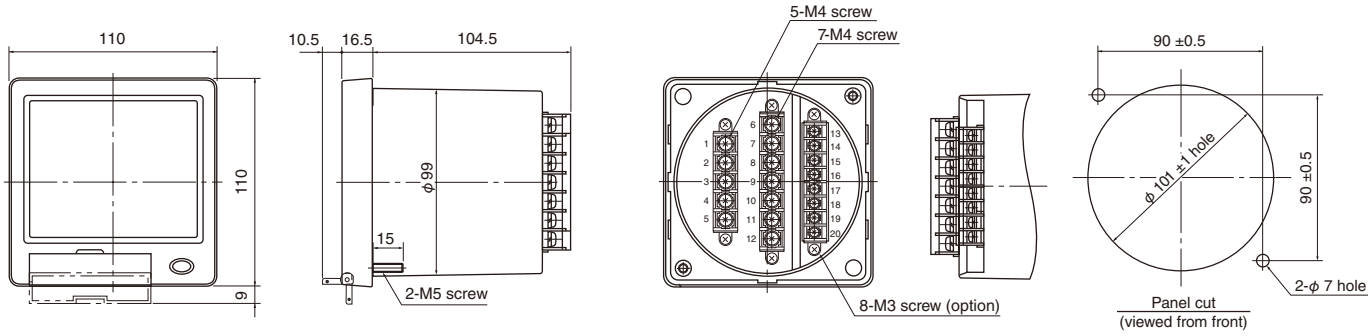

■ Handling precautions

Installation: The contrast of LCDs differs depending on the angle at which they are viewed. Install in the position that will result in the optimum angle.

Ensure that the installation panel thickness is 10 mm or less.

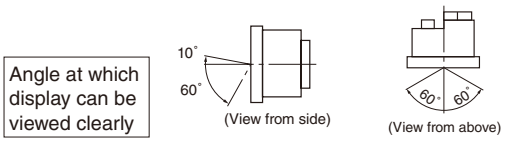

■ Wiring connection

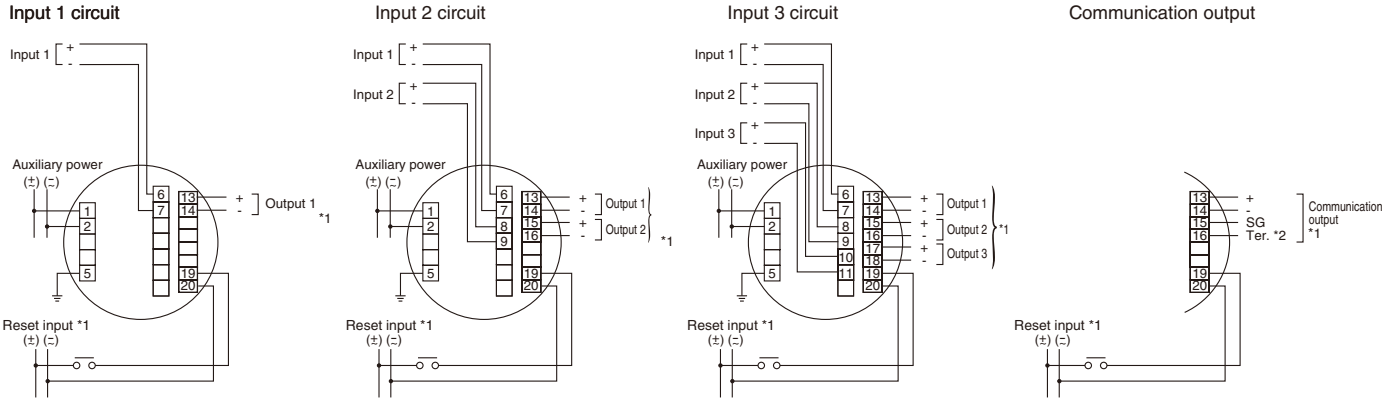

*1 Output 1, output 2, output 3, reset input, and communication output are all optional.
*2 A terminating resistor is connected internally for communication output by shorting Nos.14 and 16.

Switchboard Instruments
DC Receiving Meter, DC Input Meter WE1B/1C type

Series resistor wire connection example

The series resistor provided is installed externally for voltage input of 301 V or higher.

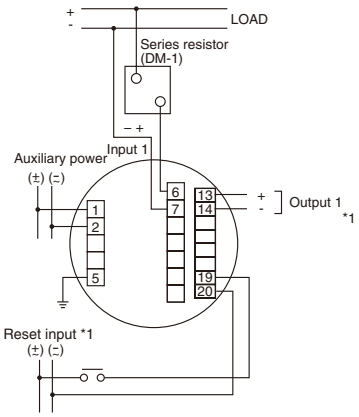

Wire connection example for DC power (W), DC electric energy (Wh) specification

Shunts are sold separately. (Refer to catalog HS140.)

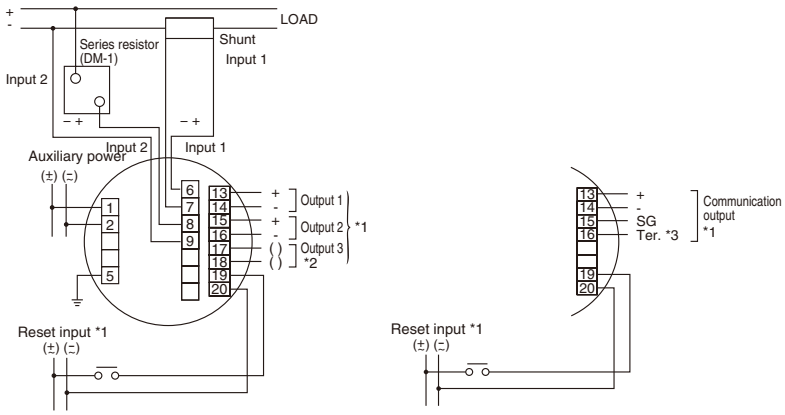

*1 Output 1, output 2, output 3, reset input, pulse output, and communication output are all optional.
*2 Outputs 1 and 2 are dedicated analog outputs, output 3 is an analog output or pulse output (output 3 is 17(+), 18(-) in the case of analog). Electric energy (Wh) output is output 3 pulse output.
*3 A terminating resistor is connected internally for communication output by shorting Nos.14 and 16.

■ External operation input usage precautions

External operation input power consumption is 0.4 VA at 110 VAC, 0.4 W at 110 VDC, and 1.4 VA at 220 VAC.

If using relays or switches to supply power, use products with minimum applicable load of approximately 1 mA.

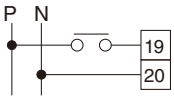

D1

■ WE1C (DC input meter) display combination patterns

Display combination list

Depending on the display combination, display position changes, DC power (W) measurement, and DC electric energy (Wh) measurement can be set.
Pattern 1: standard product, patterns 2 to 6: when display position change specified, patterns 7 to C: when DC power (W) measurement specified, patterns D to J: when DC electric energy (Wh) measurement specified

Pattern No.	Input specification 1			Input specification 2, W/Wh specification			Input specification 3			INPUT display
	Main monitor	Sub monitor (left)	Sub monitor (right)	Main monitor	Sub monitor (left)	Sub monitor (right)	Main monitor	Sub monitor (left)	Sub monitor (right)	
Pattern 1	Input 1	-	-	Input 1	Input 2	-	Input 1	Input 2	Input 3	ON/OFF
Pattern 2				Input 1	-	Input 2	Input 1	Input 3	Input 2	OFF
Pattern 3				Input 2	Input 1	-	Input 2	Input 1	Input 3	OFF
Pattern 4				Input 2	-	Input 1	Input 2	Input 3	Input 1	OFF
Pattern 5				-	Input 1	Input 2	Input 3	Input 1	Input 2	OFF
Pattern 6				-	Input 2	Input 1	Input 3	Input 2	Input 1	OFF
Pattern 7				W	A	V	W	A	V	OFF
Pattern 8				W	V	A	W	V	A	OFF
Pattern 9				A	V	W (lettering)	A	V	W (lettering)	OFF
Pattern A				A	W (lettering)	V	A	W (lettering)	V	OFF
Pattern B				V	A	W (lettering)	V	A	W (lettering)	OFF
Pattern C				V	W (lettering)	A	V	W (lettering)	A	OFF
Pattern D				Wh (lettering)	A	V	Wh (lettering)	A	V	OFF
Pattern E				Wh (lettering)	V	A	Wh (lettering)	V	A	OFF
Pattern F				Wh (lettering)	A	W (lettering)	Wh (lettering)	A	W (lettering)	OFF
Pattern G				Wh (lettering)	V	W (lettering)	Wh (lettering)	V	W (lettering)	OFF
Pattern H				Wh (lettering)	W (lettering)	A	Wh (lettering)	W (lettering)	A	OFF
Pattern J				Wh (lettering)	W (lettering)	V	Wh (lettering)	W (lettering)	V	OFF

LCD meter relay with maximum 3 input circuits, 6 contact output circuits

■ Application

- Ideal for electrical control error detection, error warning, and automatic control in all kinds of plants.
- Ideal for rotation speed and measurement signal (voltage, temperature, etc.) error detection, error warning, and automatic control on rotating machines.

■ Features

- There are a maximum of 3 input circuits, and voltage and current can be combined freely.
- Equipped with 6 contact output circuits as standard (contact outputs can be assigned as required).
  (There are 4 contact output circuits when equipped with communication output.)
- Warning status can be monitored with communication output (RS-485, specified by customer), and setting values can be changed.
- Operation value setting values and measurement values can be displayed in the scale and units actually used.
- Operation values can be set from -25 to +125% of input, and with 4 to 20 mA DC input, can be used for disconnection detection with L detection of 0% or less.
- Operation settings can be specified for upper limit/lower limit detection, and operation can be selected from excitation, non-excitation, or OFF.
- Equipped with delay function and contact delay function when starting as standard, and the contact delay time operating state can be verified with the pre-alarm function.
- DC power can be measured by calculating DC current (input 1) and DC voltage (input 2).
- Maximum and minimum values can be retained.
- One bar graph measurement and up to three digital measurements can be displayed simultaneously.

■ Model / type

Measurement element	Input circuit	Type
DC input measurement	DC input signal 1 circuit	**WE1RL-A□00□1-□0**
	DC input signal 2 circuit	**WE1RL-A□□0□1-□0**
	DC input signal 3 circuit	**WE1RL-A□□□□1-□0**
DC power measurement	DC current input, DC voltage input	**WE1RL-A□□W□1-□0**

Switchboard Instruments
DC Input Meter Relay WE1RL type

■ Type number nomenclature

● DC input measurement

WE1RL - □ □ □ □ □ □ - □ 0

(1) Basic type

(2) Hard model

A	Hard model A

(3) Input 1

1	1 to 5 VDC
2	0 to 1 VDC
3	0 to 5 VDC
4	0 to 10 VDC
5	4 to 20 mA DC
6	0 to 1 mA DC
7	0 to 5 mA DC
8	0 to 10 mA DC
9	0 to 16 mA DC
A	0 to 20 mA DC
B	0 to 50 mVDC
C	0 to 60 mVDC
D	0 to 100 mVDC
E	0 to 50 VDC
F	0 to 75 VDC
G	0 to 100 VDC
H	0 to 150 VDC
J	0 to 200 VDC
Y	±301 to ±800 VDC *1

(4) Input 2

0	No input *3
1	1 to 5 VDC
2	0 to 1 VDC
3	0 to 5 VDC
4	0 to 10 VDC
5	4 to 20 mA DC
6	0 to 1 mA DC
7	0 to 5 mA DC
8	0 to 10 mA DC
9	0 to 16 mA DC
A	0 to 20 mA DC
B	0 to 50 mVDC
C	0 to 60 mVDC
D	0 to 100 mVDC
E	0 to 50 VDC
F	0 to 75 VDC
G	0 to 100 VDC
H	0 to 150 VDC
J	0 to 200 VDC
Y	±301 to ±800 VDC *1

(5) Input 3

0	No input *3
1	1 to 5 VDC
2	0 to 1 VDC
3	0 to 5 VDC
4	0 to 10 VDC
5	4 to 20 mA DC
6	0 to 1 mA DC
7	0 to 5 mA DC
8	0 to 10 mA DC
9	0 to 16 mA DC
A	0 to 20 mA DC
B	0 to 50 mVDC
C	0 to 60 mVDC
D	0 to 100 mVDC
E	0 to 50 VDC
F	0 to 75 VDC
G	0 to 100 VDC
H	0 to 150 VDC
J	0 to 200 VDC
Y	±301 to ±800 VDC *1

(6) Auxiliary power

1	Used for 85 to 253 VAC and 80 to 143 VDC
2	20 to 56 VDC

(7) External operation input

1	With external operation input (function can be changed)

(8) Communication output and warning output

1	Without communication + warning output x 6
2	With communication output + warning output x 4 (RS-485 protocol A)

(9) Backlight

0	None

● DC power measurement

WE1RL - □ □ □ □ □ □ - □ 0

(1) Basic type

(2) Hard model

A	Hard model A

(3) Current input (shunt output)

B	0 to 50 mVDC
C	0 to 60 mVDC
D	0 to 100 mVDC

(4) Voltage input

E	0 to 50 VDC
F	0 to 75 VDC
G	0 to 100 VDC
H	0 to 150 VDC
J	0 to 200 VDC
Y	±301 to ±800 VDC *1

(5) Calculation

W	DC power measurement *2

(6) Auxiliary power

1	Used for 85 to 253 VAC and 80 to 143 VDC
2	20 to 56 VDC

(7) External operation input

1	With external operation input (function can be changed)

(8) Communication output and warning output

1	Without communication + warning output x 6
2	With communication output + warning output x 4 (RS-485 protocol A)

(9) Backlight

0	None

*1 It is necessary to specify voltage. The series resistor provided (DM-1) is installed externally and used for voltage input of ±301 V or higher.
*2 DC power measurement values are calculated and displayed from the input 1 measurement value (current value) and input 2 measurement value (voltage value).
If the DC power measurement specification is selected, select input 1 from codes B to D, and input 2 from codes E to J and Y.
*3 In the case of 1 input, select code 0 with no input for input 2 and 3.
In the case of 2 inputs, select code 0 with no input for input 3.

■ Specifications, performance

● General specifications

DC input specifications	Input		Input resistance
	1 to 5 VDC, 0 to 1 VDC, 0 to 5 VDC, 0 to 10 VDC		Approx. 1 MΩ
	4 to 20 mA DC		Approx. 50 Ω
	0 to 1 mA DC		Approx. 1 kΩ
	0 to 5 mA DC		Approx. 200 Ω
	0 to 10 mA DC		Approx. 100 Ω
	0 to 16 mA DC, 0 to 20 mA DC		Approx. 50 Ω
	0 to 50 mVDC, 0 to 60 mVDC, 0 to 100 mVDC, 0 to 50 VDC, 0 to 75 VDC, 0 to 100 VDC, 0 to 150 VDC, 0 to 200 VDC		Approx. 1 MΩ
	301 to 800 VDC		Approx. 301 to 800 kΩ (incl. DM-1 accessory resistance value)
External operation input	Number of input circuits	1 circuit	
	Input specifications	(1) External operation input function switching • External reset: Resets maximum value, minimum value, or warnings • External display switching: Switches the display (2) Minimum operation pulse width 300 ms, continuous application possible Input has same rating as auxiliary power (1) 100/110 VAC 0.4 VA, 200/220 VAC 1.4 VA, 100/110 VDC 0.4 W, uses both AC/DC Contact capacity: approx. 3 mA (100/110 VAC/DC), approx. 6 mA (200/220 VAC) (2) 24 VDC 0.3 W, 48 VDC 1.2 W Contact capacity: approx. 10 mA (24 VDC), approx. 20 mA (48 VDC) (3) External operation relay or switch minimum contact capacity Select a product compatible with minimum applicable load of 1 mA.	
Number of output circuits	6 circuits Non-voltage contact 1a (between, 2000 VAC insulation), 4 circuits if communication specification selected, non-voltage contact 1a (between, 2000 VAC insulation)		
Contact capacity	Maximum switching load	250 VAC 8 A, 125 VDC 0.3 A (resistive load) 250 VAC 2 A, 125 VDC 0.1 A (inductive load, cosϕ = 0.4, L/R = 7 ms)	
	Minimum switching load	5 VDC 10 mA	
Digital display range	Digital display	-9999 to 9999	Number of digits, decimal point can be set as required
	Power factor (cosϕ) display	(1) LEAD 0.500 to 1.000 to LAG 0.500 (2) LEAD 0.000 to 1.000 to LAG 0.000	4 digits fixed, decimal point position is fixed
	Frequency display	(1) 45.0 to 55.0 Hz or 45.00 to 55.00 Hz (2) 55.0 to 65.0 Hz or 55.00 to 65.00 Hz (3) 45.0 to 65.0 Hz or 45.00 to 65.00 Hz	3 or 4 digits fixed, decimal point position is fixed
	Reactive power display (LEAD,LAG)	LEAD 9999 to 0 to LAG 9999	Number of digits, decimal point can be set as required
Bar graph display range	Max. scale value	1, 1.2, 1.5, 1.6, 1.8, 2, 2.4, 2.5, 3, 3.2, 3.6, 4, 4.5, 4.8, 5, 6, 6.4, 7.2, 7.5, 8, 9, 9.6, integral power of 10 (10^n)	However, the range is -9900 ≤ N ≤ 9900
	Power factor (cosϕ) display	(1) LEAD 0.5 to 1 to LAG 0.5 (2) LEAD 0 to 1 to LAG 0	Scale value is fixed LEAD, LAG displayed when power factor display selected
	Frequency display	(1) 45 to 55 Hz (2) 55 to 65 Hz (3) 45 to 65 Hz	Scale value is fixed
	Reactive power display (LEAD,LAG)	LEAD□～0～LAG□ Value represented by □ is same as maximum scale value	However, this will be in LEAD 9900 to 0 to LAG 9900 range LEAD, LAG displayed when reactive power display selected

● Communication specifications

RS-485 Communication output protocol A	RS-485, half-duplex two wire system, start-stop synchronous system * A separate communication specifications document containing detailed specifications is available.	
	Transmission speed	1200 bps/2400 bps/4800 bps/9600 bps
	Transmission code	NRZ
	Start bit	1 bit
	Data length	7 bits / 8 bits
	Parity	None / even number / odd number
	Stop bit	1 bit / 2 bits
	Cable length	1000 m (total length)
	Address	1 to 254
	Transmission character	ASCII code

Switchboard Instruments
DC Input Meter Relay WE1RL type

● Performance

Item	Specifications			
Digital display level	1.0 (1.5 if current input is in ±100 μA to ±499 μA range)			
Bar graph display level	5.0			
Setting accuracy	±0.5% (% of span) (1.0% if current input is in ±100 μA to ±499 μA range)			
Operating point reproducibility	±0.5% (% of span)			
Contact delay time (CD)	Setting range	Setting range: 0 to 180 s		
	Accuracy	Contact delay time setting value ±0.25 s (0.5 ±0.25 s if setting value = 0 s)		
Reset time	0.5 s or less			
Starting delay time (SD)	Setting range	Setting range: 0 to 180 s		
	Accuracy	Starting delay time setting value ±0.25 s		
Dead band	0.5 to 50.0% (% of input span)			
Temperature influence	Within 100% of level index at 23 ±10°C			
Conforming standards	JIS C 1102-1:1997 ···· Direct acting indicating analogue electrical measuring instruments and their accessories -- Part 1: Definitions and general requirements common to all parts			
	JIS C 1102-2:1997 ···· Direct acting indicating analogue electrical measuring instruments and their accessories -- Part 2: Special requirements for ammeters and voltmeters			
	JIS C 1102-7:1997 ···· Direct acting indicating analogue electrical measuring instruments and their accessories -- Part 7: Special requirements for multi-function instruments			
	JIS C 1102-8:1997 ···· Direct acting indicating analogue electrical measuring instruments and their accessories -- Part 8: Special requirements for accessories			
	JIS C 1102-9:1997 ···· Direct acting indicating analogue electrical measuring instruments and their accessories -- Part 9: Recommended test methods			
	JIS C 1010-1:2005 ···· Safety requirements for electrical equipment for measurement, control and laboratory use -- Part 1: General requirements			
Display update time	Approx. 1 s (bar graph: approx. 0.25 s)			
Display element/configuration	LCD	Main monitor	Character height: 10 mm, 4 digits	
		Sub monitor (left), (right)	Character height: 6 mm, 4 digits	
		Bar graph	30 dots	
Auxiliary power: Without backlight	(1) 85 to 253 VAC 50/60 Hz 80 to 143 VDC	10 VA (rated voltage: 100/110 VAC, 200/220 VAC) 4 W (rated voltage: 100/110 VDC), uses both AC/DC.		Specify (1) or (2)
	(2) 20 to 56 VDC	6 W (rated voltage: 24/48 VDC)		
Auxiliary power: Inrush current (time constant)	Rated voltage: 110 VAC	4.0 A or less (approx. 3.2 ms)		
	Rated voltage: 220 VAC	8.0 A or less (approx. 3.2 ms)		
	Rated voltage: 110 VDC	2.8 A or less (approx. 3.2 ms)		
	Rated voltage: 24 VDC	4.4 A or less (approx. 4.4 ms)		
	Rated voltage: 48 VDC	8.9 A or less (approx. 4.4 ms)		
Overload capacity	Voltage circuit	2 times rated voltage for 10 seconds, 1.2 times continuously		
	Current circuit	10 times rated current for 5 seconds, 1.2 times continuously		
	Auxiliary power	1.5 times rated voltage for 10 seconds, 1.2 times continuously 1.5 times rated voltage for 10 seconds, 1.3 times continuously at 110 VDC		
Insulation resistance	Between collective electric circuits and outer case (ground)	50 MΩ or more with 500 VDC megohmmeter		
	Between inputs, outputs, auxiliary power			
	Between inputs			
	Between warning outputs, between warning outputs and communication outputs			
Withstand voltage	Between collective electric circuits and outer case (ground)	2000 VAC (50/60 Hz), 1 minute The withstand voltage will be 2200 VAC if the circuit voltage is 651 to 800 V.		
	Between inputs, outputs, auxiliary power			
	Between inputs			
	Between warning outputs, between warning outputs and communication outputs			
Lightning impulse withstand voltage	Between collective electric circuits and outer case (ground)	5 kV 1.2/50 μs, positive and negative polarity, 3 times each		
Noise tolerance	(1) Oscillatory surge voltage Measurement error should be within ±10% when attenuating oscillatory wave form of 1 to 1.5 MHz, peak voltage of 2.5 to 3 kV is applied repeatedly. Voltage, current circuits (common), power supply circuit (normal/common) (2) Square-wave impulse noise Measurement error should be within ±10% when 1 μs, 100 ns width noise is applied repeatedly for 5 minutes. Voltage, current circuit (common) 1.5 kV or more Power supply circuit (normal/common) 1.5 kV or more External operation input (common) 1.0 kV or more Warning output (common) 1.0 kV or more (3) Radio wave noise: Measurement error should be within ±10% when 150, 400, and 900 MHz band radio waves are irradiated intermittently at 5 W, 1 m, and when mobile phone radio waves are irradiated intermittently at 1 m. (4) Electrostatic noise Measurement error should be within ±10% at 8 kV when power is on. There should be no damage at 10 kV when power is off. (capacitor charging method)			
Vibration, shock	Vibration: one-way amplitude of 0.15 mm, 10 to 55 Hz, 5 sweeps at 1 octave every minute Shock: 490 m/s², 3 times in each direction			
Power failure guarantee	Max. value, min. value, setting value, cumulative value data retained in non-volatile memory			
Operating temperature and humidity range	-10 to +55°C, 30 to 85% RH, there should be no condensation			
Storage temperature range	-25 to +70°C			

■ List of units

● Standard units

Standard units	LCD (15 types) *1			Unit lettering display (63 types) *4							
	(1)	A		(1)	APm	(17)	kvarh	(33)	mV	(49)	pH
	(2)	kA		(2)	bar	(18)	kW *5	(34)	m^3	(50)	ppm
	(3)	V		(3)	cm	(19)	kWh	(35)	m^3/h	(51)	R
	(4)	kV		(4)	Cosφ	(20)	L	(36)	m^3/min	(52)	rad
	(5)	W		(5)	ELm	(21)	L/h	(37)	m^3/s	(53)	rpm
	(6)	kW		(6)	Hz	(22)	L/min	(38)	MPa	(54)	r/min
	(7)	MW		(7)	J	(23)	m	(39)	Mvar	(55)	SPm
	(8)	ºC		(8)	K	(24)	mA	(40)	MW *5	(56)	t
	(9)	%		(9)	kg	(25)	mg/L	(41)	N	(57)	t/h
	(10)	Cosφ	*2	(10)	kg/h	(26)	min	(42)	N·m	(58)	TPm
	(11)	Hz	*3	(11)	kg/m^2	(27)	min^{-1}	(43)	Nm^3/h	(59)	W *5
	(12)	var	*3	(12)	kg/m^3	(28)	mL/min	(44)	Nm^3/min	(60)	YPm
	(13)	kvar	*3	(13)	kL	(29)	mm	(45)	N/m^2	(61)	μm
	(14)	Mvar	*3	(14)	kN	(30)	m/h	(46)	N/mm^2	(62)	μs/cm
	(15)	No unit		(15)	kPa	(31)	m/min	(47)	OPm	(63)	°
				(16)	kvar	(32)	m/s	(48)	Pa		

*1 There are 15 types of unit for the LCD main monitor, 14 types for the sub monitor (left), and 11 types for the sub monitor (right).
*2 Cosφ can only be displayed on the LCD main monitor and sub monitor (right).
*3 Hz and var can only be displayed on the LCD main monitor and sub monitor (left).
*4 60 types of lettering are displayed on the main monitor, and 63 types on the sub monitor.
The lettering character height is 8.5 mm for the main monitor, and 5 mm for the sub monitor.
The lettering character color is gray.
*5 Lettering can be displayed on the sub monitor only. The main monitor employs an LCD.

● Standard unit display

LCD unit display list	Unit display No.	Main monitor	Sub monitor (left)	Sub monitor (right)
	0	No display	No display	No display
	1	A	A	A
	2	kA	kA	kA
	3	V	V	V
	4	kV	kV	kV
	5	W	W	W
	6	kW	kW	kW
	7	MW	MW	MW
	8	ºC	ºC	ºC
	9	%	%	%
	10	Cosφ	-	Cosφ
	11	Hz	Hz	-
	12	var	var	-
	13	kvar	kvar	-
	14	Mvar	Mvar	-

● Display pattern list

Display pattern		1 input specification			2 input specification			3 input specification		
		Main monitor	Sub monitor (left)	Sub monitor (right)	Main monitor	Sub monitor (left)	Sub monitor (right)	Main monitor	Sub monitor (left)	Sub monitor (right)
Select for DC input. *1	Pattern 1	Input 1	-	-	Input 1	Input 2	-	Input 1	Input 2	Input 3
	Pattern 2				Input 1	-	Input 2	Input 1	Input 3	Input 2
	Pattern 3				Input 2	Input 1	-	Input 2	Input 1	Input 3
	Pattern 4				Input 2	-	Input 1	Input 2	Input 3	Input 1
	Pattern 5				-	Input 1	Input 2	Input 3	Input 1	Input 2
	Pattern 6				-	Input 2	Input 1	Input 3	Input 2	Input 1
Select for DC power measurement. *2	Pattern 7				DC power	Current	Voltage			
	Pattern 8				DC power	Voltage	Current			
	Pattern 9				Current	Voltage	DC power			
	Pattern A				Current	DC power	Voltage			
	Pattern B				Voltage	Current	DC power			
	Pattern C				Voltage	DC power	Current			

*1 In the case of DC input, display pattern 1 will be used if the display pattern is not specified.
*2 In the case of DC power measurement, display pattern 7 will be used if the display pattern is not specified.

Switchboard Instruments
DC Input Meter Relay WE1RL type

■ Input and warning contact arrangement

Example 1. 1 input circuits: 1 input initial settings

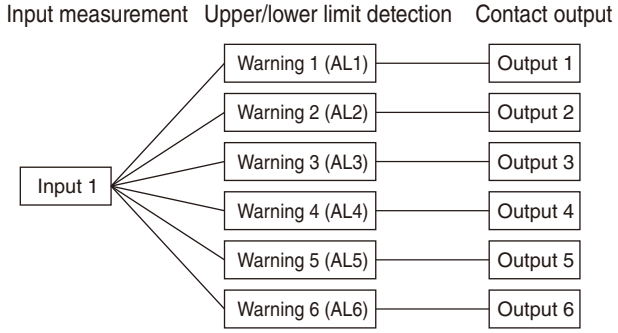

Example 2. 2 input circuits: 2 input initial settings

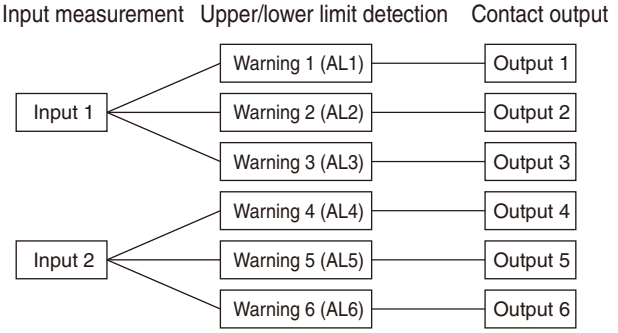

Example 3. 3 input circuits: 3 input initial settings

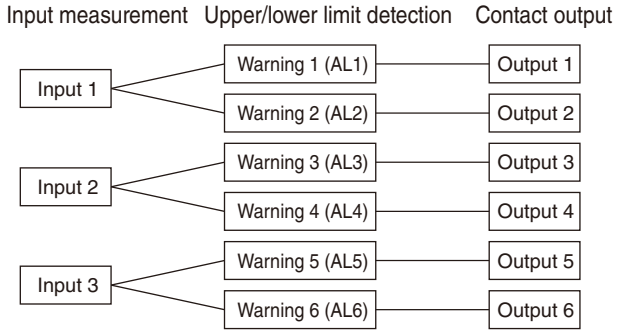

Example 4. 3 input circuits: 3 input configuration change example

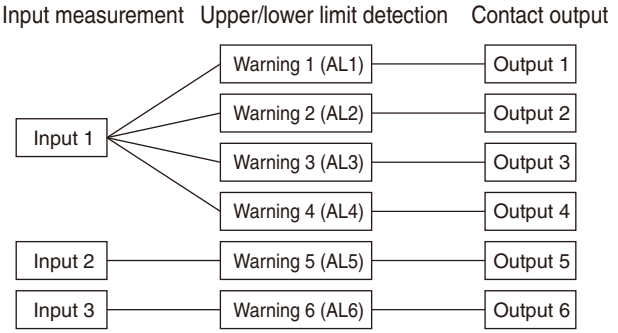

■ Name and function of each part

Digital display area
3 elements can be measured and monitored simultaneously.

Input 1 circuit: input 1 displayed only
Input 2 circuit: input 1, 2 displayed only
Input 3 circuit: input 1, 2, 3 displayed

Bar graph display area
Measurement values are displayed in analog format.
The measurement element displayed in the bar graph can be changed by pressing the DISPLAY button.

Main monitor warning status display
Warning setting index
(Can be used as control index when warnings are set to OFF)

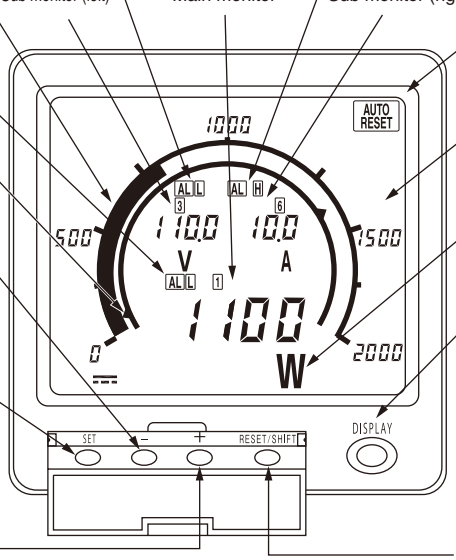

Warning output reset operation display
The warning output reset operation can be set by setting the reset method.

Scale value
This is set automatically with the display scaling settings.

Unit display
The unit can be set in the unit display settings.

DISPLAY
This button is used to change the input element displayed in the bar graph.
→ Main monitor → sub monitor (left) → sub monitor (right) →
Hold down together with the SET button for 3 seconds or longer to change from display mode to setting mode 2.
This can be switched with the function for the + button in the settings.
The mode returns from setting mode to display mode with a single action.

-
This button is used to verify warning settings.
The display returns from the warning setting display to display mode following no operation for 10 seconds.
In setting mode, this is used to lower setting values.

SET
This button is used to change to setting mode.
When ON continuously for 3 seconds or longer, the mode changes from display mode to setting mode 1.
In setting mode, this is used as a button for configuring the setting value.

+
This button is used to verify maximum and minimum values for all inputs.
It changes in the order maximum value → minimum value.
The display returns from the maximum and minimum value display to display mode following no operation for 10 minutes.
In setting mode, this is used to advance setting values.
This can be switched with the function for DISPLAY in the settings.

RESET/SHIFT
This button is used to reset retained maximum and minimum values or the retained warning output status.
When held down continuously for 1 second or longer, retained maximum and minimum values are reset from the max., min. value confirmation screen.
When manual reset has been set, by holding down continuously for 1 second or longer when in display mode, the retained warning output status is reset.
In setting mode, this is used to move items.

■ External connection diagrams

Input 1 circuit

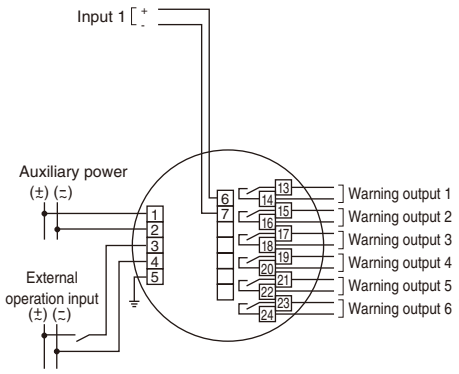

Input 2 circuit

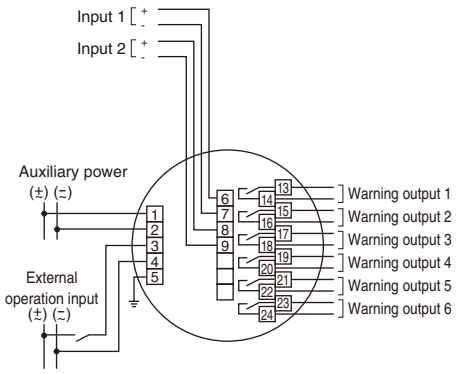

Input 3 circuit

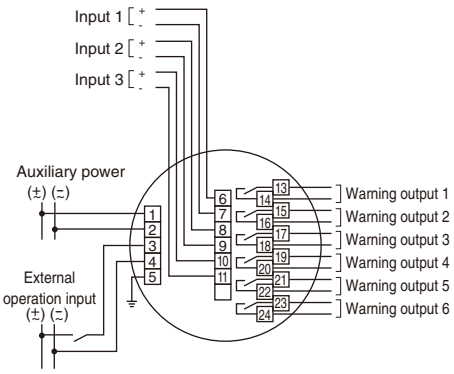

Series resistor wire connection example
The series resistor provided (DM-1) is installed externally for voltage input of 301 V or higher.

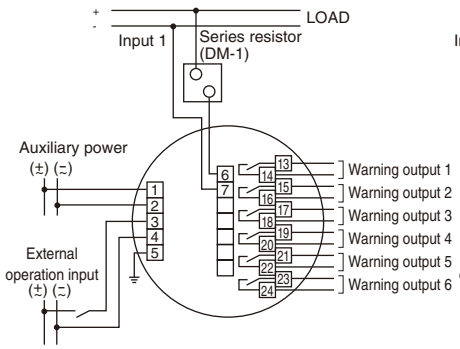

DC power measurement example
Shunts are sold separately.

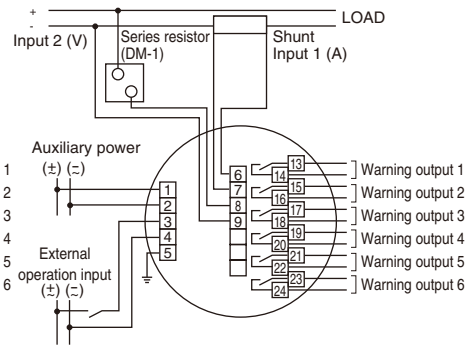

(DC power is calculated and displayed from DC current input 1 (A) and DC current input 2 (V) measurement values.)

Wire connection if equipped with communication output

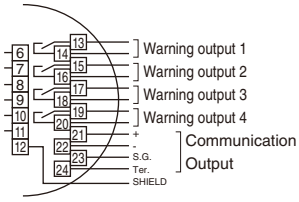

A terminating resistor is connected internally by shorting Nos. 22 and 24.

■ Wiring precautions

(1) In the interests of safety, be sure to attach the terminal cover after wiring work is complete.
(2) Be sure to separate input and output side wiring, and take external noise into consideration (malfunction prevention).
(3) Be sure to ground the earthing terminal (terminal No. 5). Furthermore, ensure that the grounding resistance between the earthing terminal and ground is 100 Ω or less.
(4) Ensure that the distance between this product and circuit breakers, and relay contact signal lines is as great as possible inside ducts.
(5) If connecting an inductive load to the warning output, it is recommended that an external surge suppressor be installed. The contact life expectancy will be shorter without a surge suppressor.
(6) A series resistor (DM-1) is provided for voltage input of 301 V or higher. DM-1 has been adjusted in combination with the meter unit, and therefore the accessory provided must be used. If multiple DM-1 series resistors are provided with a single meter, use in combination with one suited to the input element.

■ External dimension drawings

● External dimension drawings (unit: mm)

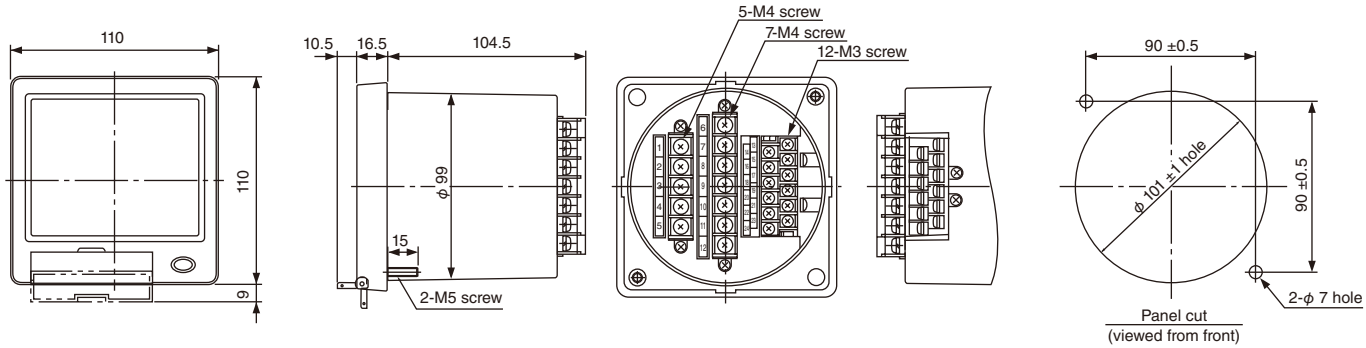

Switchboard Instruments
DC Input Meter Relay WE1RL type

■ Series resistor DM-1 (accessory) external dimension drawing [unit: mm]

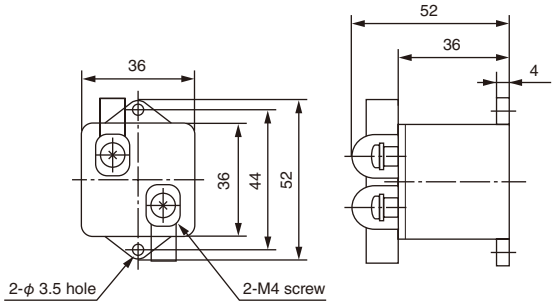

(Series resistor DM-1 is installed externally and used for voltage input of 301 V or higher.)

F-type panel instruments 60mm to 120mm square

■ Description

The F-type is both small in size and budget-priced. Since they take a minimum of installation space they are best suited for motor starter, control center and distribution board applications. Meter cases are made of a highly attractive and durable plastic.

■ Features

- Accuracy class: 2.5
- Meter scales are easy to read without error
- Compact design and budget-priced
- Meter accuracy is not affected by panel materials or adjacent current-carrying conductors
- Complies with requirements of JIS C1102
- Dielectric test: 3320V AC, 5sec.

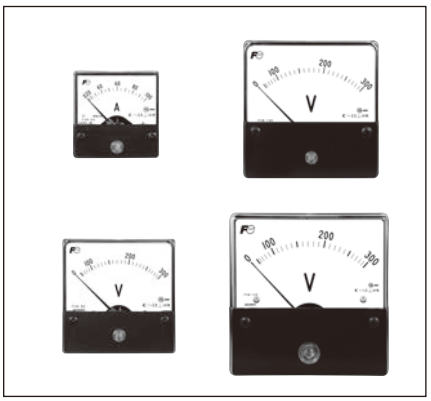

Meter	Description		60mm square Type	80mm square Type	100mm square Type	120mm square Type
AC ammeter	For direct connection (up to 500V) Measuring range Extended range 0 – 500mA 0 – 500mA – 1.5A 0 – 1A 0 – 1A – 3A 0 – 3A 0 – 3A – 9A 0 – 5A 0 – 5A – 15A 0 – 7.5A 0 – 7.5A – 22.5A 0 – 10A 0 – 10A – 30A 0 – 15A 0 – 15A – 45A 0 – 20A 0 – 20A – 60A 0 – 30A 0 – 30A – 90A	• Operating principle: Moving iron • Power consumption: 1VA	**FSN-60**	**FSN-80**	**FSN-100**	**FSN-120**
	For connection to CT Measuring range Extended range 0 – X (A) 0 – X – 3X CT ratio: X/5 (X: CT primary current)	• Operating principle: Moving iron • Power consumption: 1VA				
	For direct connection (up to 500V) Measuring range 0 – 100μA 0 – 40mA 0 – 500μA 0 – 50mA 0 – 1mA 0 – 60mA 0 – 3mA 0 – 75mA 0 – 5mA 0 – 100mA 0 – 10mA 0 – 150mA 0 – 20mA 0 – 200mA 0 – 25mA 0 – 250mA 0 – 30mA 0 – 300mA	• Operating principle: Rectifier • Power consumption: 1VA	**FRN-60**	**FRN-80**	**FRN-100**	**FRN-120**
	For connection to MR-CTN Measuring range 0 – 400mA 0 – 1A 0 – 500mA 0 – 2A 0 – 600mA 0 – 2.5A 0 – 750mA 0 – 3A	• Operating principle: Rectifier • Power consumption: 1VA				
AC voltmerter	For direct connection Measuring range 0 – 150V 0 – 300V 0 – 600V Series resistor to be mounted externally	• Operating principle: Moving iron • Power consumption 0 – 150V, 0 – 300V: 5VA 0 – 600V: 10VA	**FSN-60**	**FSN-80**	**FSN-100**	**FSN-120**
	For connection to VT Measuring range 0 – 600V 0 – 4.5kV 0 – 9kV	• Operating principle: Moving iron • Power consumption: 5VA				

Panel Instruments
F type

Meter	Description		60mm square Type	80mm square Type	100mm square Type	120mm square Type
AC voltmerter	For direct connection Measuring range 0 – 10V 0 – 60V 0 – 15V 0 – 75V 0 – 20V 0 – 100V 0 – 25V 0 – 150V 0 – 30V 0 – 200V 0 – 40V 0 – 250V 0 – 50V 0 – 300V	• Operating principle: Rectifier • Internal resistance: 1000 Ω/V	**FRN-60**	**FRN-80**	**FRN-100**	**FRN-120**
DC ammerter	For direct connection Measuring range 0 – 1mA 0 – 200mA 0 – 10A 0 – 3mA 0 – 500mA 0 – 15A 0 – 5mA 0 – 1A 0 – 20A 0 – 10mA 0 – 1.5A 0 – 30A 0 – 20mA 0 – 2A 0 – 50mA 0 – 3A 0 – 100mA 0 – 5A	• Operating principle: Moving coil	**FMN-60**	**FMN-80**	**FMN-100**	**FMN-120**
	For connection to shunt Measuring range 0 – 50A 0 – 300A 0 – 75A 0 – 500A 0 – 100A 0 – X(A) 0 – 200A	• Operating principle: Moving coil • Shunt rating: 60mV				
DC voltmerter	For direct connection Measuring range 0 – 1V 0 – 50V 0 – 3V 0 – 75V 0 – 5V 0 – 100V 0 – 10V 0 – 150V 0 – 15V 0 – 300V 0 – 30V	• Operating principle: Moving coil • Series resistor: Internal Internal resistance: 1V: 1Ω 50V: 50Ω 3V: 3Ω 75V: 75Ω 5V: 5Ω 100V: 100Ω 10V: 10Ω 150V: 150Ω 15V: 15Ω 300V: 300Ω 30V: 30Ω	**FMN-60**	**FMN-80**	**FMN-100**	**FMN-120**
	For connection to series resistor Measuring range 0 – 500V 0 – 600V 0 – 750V 0 – 1kV 0 – 1.5kV 0 – 2kV	• Operating principle: Moving coil • Series resistor: Internal 500V: 500Ω 600V: 600Ω • Series resistor: External (3-termimal) 750V ~ 2kV				
Single-phase 2-wire wattmeter	For connection to VT and CT Measuring range 0 – ZkW Z= 0.5 x X/5 x Y/110 Z: kWatt X: CT primary current Y: VT primary voltage	• Operating principle: Power/DC transducing type Power consumption Current coil: 1VA (at 5A) Voltage coil: 3.5VA	**FRN-60W1**	**FRN-80W1**	**FRN-100W1**	**FRN-120W1**
3-phase 3-wire wattmeter	For connection to VT and CT Measuring range 0 – ZkW Z= 0.5 x X/5 x Y/110 Z: kWatt X: CT primary current Y: VT primary voltage	• Operating principle: Power/DC transducing type Power consumption Current coil: 1VA (at 5A) Voltage coil: 3.5VA	**FRN-60W3**	**FRN-80W3**	**FRN-100W3**	**FRN-120W3**
3-phase 3-wire varmeter	For connection to VT and CT Measuring range 0 – Zkvar Z= 0.5 x X/5 x Y/110 Z: kvar X: CT primary current Y: VT primary voltage	• Operating principle: Power/DC transducing type Power consumption Current coil: 1VA (at 5A) Voltage coil: 3.5VA	**FRN-60VR3**	**FRN-80VR3**	**FRN-100VR3**	**FRN-120VR3**

Meter	Description		60mm square Type	80mm square Type	100mm square Type	120mm square Type
3-phase 3-wire power factor meter (for balanced circuit	For connection to VT and CT Measuring range Lead 0.5 – 1 – 0.5Lag VT ratio = Y/110V CT ratio = X/5A	• Operating principle: Power/DC transducing type Power consumption Current coil: 1VA Voltage coil: 1VA	**FRN-60PF3**	**FRN-80PF3**	**FRN-100PF3**	**FRN-120PF3**
Frequency meter	Measuring range 44 – 55Hz 110 or 220V 55 – 65Hz 110 or 220V 45 – 65Hz 110 or 220V	• Operating principle: Power/DC transducing type (built-in) Power consumption 1.7VA at 110V 2.5VA at 220V	**FRN-60F**	**FRN-80F**	**FRN-100F**	**FRN-120F**

■ Type number nomenclature (Ordering code)

F RN - 60 W1 7.5kW 75/5A 110V

Basic type

Operating principle
S: Moving iron type
M: Moving coil type
R: Rectifier type

Front frame
60: 60mm square
80: 80mm square
100: 100mm square
120: 120mm square

Input specifications

Scale

Categoly
Blank: Ammerter or Voltmeter
W1: Single-phase, 2-wire wattmeter
W2: Single-phase, 3-wire wattmeter
W3: 3-phase, 3-wire wattmeter
W4: 3-phase, 4-wire wattmeter
VR1: Single-phase, 2-wire varmeter
VR3: 3-phase, 3-wire varmeter
VR4: 3-phase, 4-wire varmeter
PF1: Single-phase 2-wire power factor meter
PF3: 3-phase, 3-wire power factor meter (balanced circuit)
PFU: 3-phase, 3-wire power factor meter (unbalanced circuit)
PF4: 3-phase, 3-wire power factor meter (unbalanced circuit)
F: Frequency meter

■ Ordering information

Specify the following:
1. Type number (Ordering code)
2. Measuring range
3. Supply voltage and frequency
4. Connection (When connecting to VT or CT, specify VT ratio or CT ratio)

Panel Instruments
F type

■ Dimensions, mm
AC/DC ammerter, AC/DC voltmeter

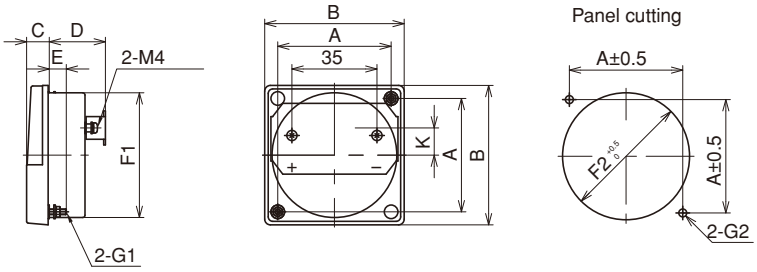

• Rectifier type

Type	A	B	C	D	E	F1	F2	G1	G2	K	Mass (g)
FRN • FMN-60	48	60	14.5	37.5	10	ø 52	ø 54 hole	M3 screw	ø 4 hole	6	90
FRN • FMN-80	64	80	14.5	37.5	10	ø 65	ø 67 hole	M3 screw	ø 4 hole	0	125
FRN • FMN-100	80	100	16	39	15	ø 85	ø 87 hole	M4 screw	ø 5.5 hole	0	180
FRN • FMN-120	100	123	20	49.5	15	ø 110	ø 112 hole	M5 screw	ø 7 hole	0	350

• Moving iron type

Type	A	B	C	D	E	F1	F2	G1	G2	K	Mass (g)
FSN-60	48	60	14.5	47.5	10	ø 52	ø 54 hole	M3 screw	ø 4 hole	6	130
FSN-80	64	80	14.5	47.5	10	ø 65	ø 67 hole	M3 screw	ø 4 hole	0	165
FSN-100	80	100	16	49.5	15	ø 85	ø 87 hole	M4 screw	ø 5.5 hole	15	260
FSN-120	100	123	20	49.5	15	ø 110	ø 112 hole	M5 screw	ø 7 hole	24	370

60/80mm square type
Wattmeter / Varmeter

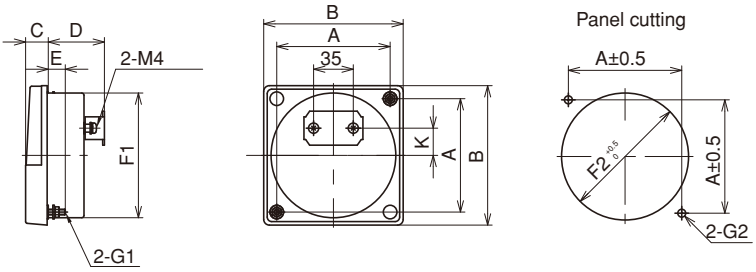

Type	A	B	C	D	E	F1	F2	G1	G2	K	Mass (g)
F□N-60	48	60	14.5	37.5	10	ø52	ø54 hole	M3 screw	ø4 hole	6	130
F□N-80	64	80	14.5	37.5	10	ø65	ø67 hole	M3 screw	ø4 hole	0	165

■ **Dimensions, mm**

100mm square type

Wattmeter / Varmeter / 3-phase, 3-wire power factor meter

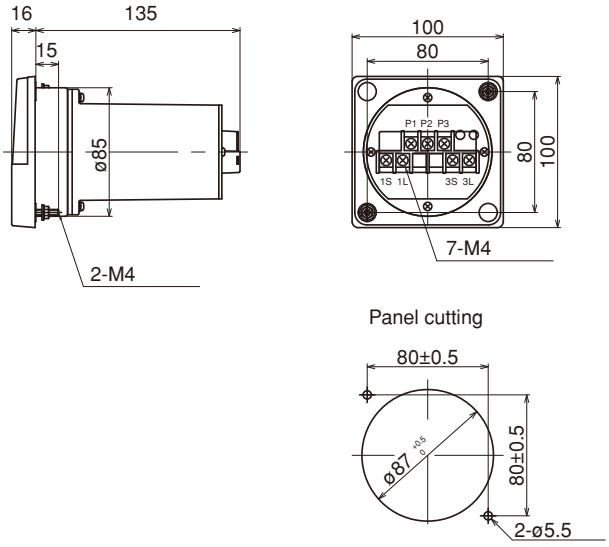

120mm square type

Wattmeter / Varmeter / 3-phase, 3-wire power factor meter

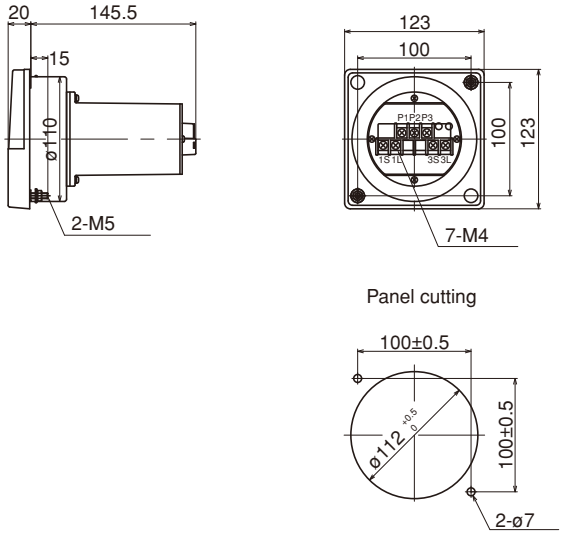

Series resistor for AC/DC voltmeter

DM-1 (for 750V to 1kV)

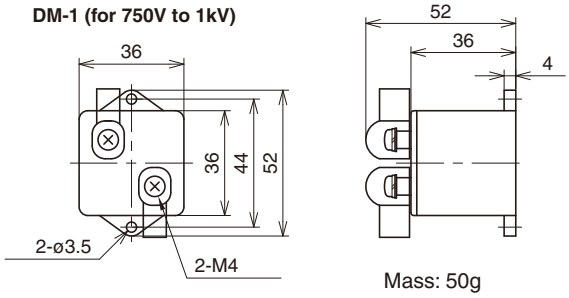

Mass: 50g

DM-2 (for 1001V to 2500V)

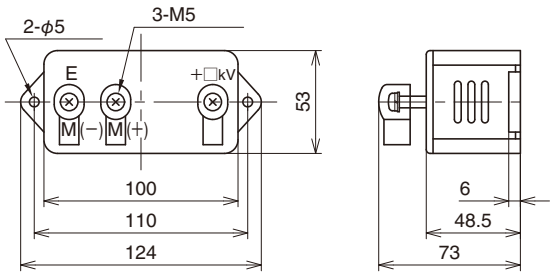

Mass: 170g

DM-5 to 25 (for 2501V to 25kV)

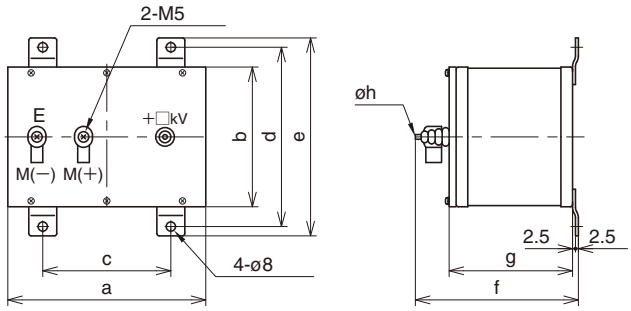

Type	Rating	a	b	c	d	e	f	g	h	Mass
DM-5	2.5 to 5kV	170	120	110	154	170	140	106	4	1.0kg or less
DM-10	6 to 10kV	220	160	140	194	210	140	106	4	1.5kg or less
DM-15	12 to 15kV	290	210	200	248	264	190	146	5	2.0kg or less
DM-20	20kV	390	260	300	294	310	220	176	5	3.0kg or less
DM-25	25kV	500	330	400	356	372	280	236	5	3.5kg or less

Series resistor for FSN-60, 80, 100, 120 600V

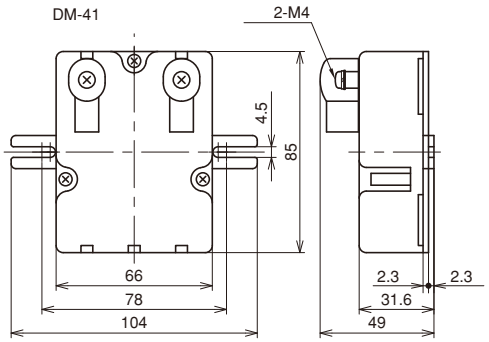

Mass: 180g

Panel Instruments
F type

■ Dimensions, mm

DC converter

- For Singe-phase, 2-wire wattmeter
- For 3-phase, 3-wire power factor meter (balanced circuit)
- For 3-phase, 3-wire wattmeter meter
- For 3-phase, 3-wire varmeter

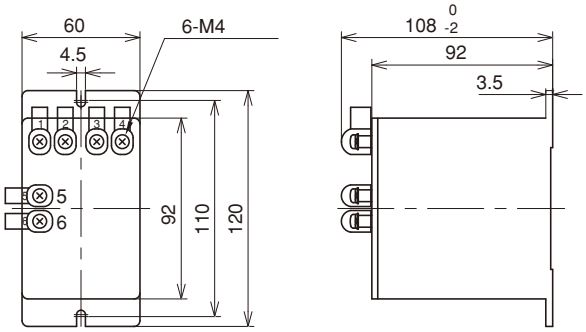

Mass: 500g

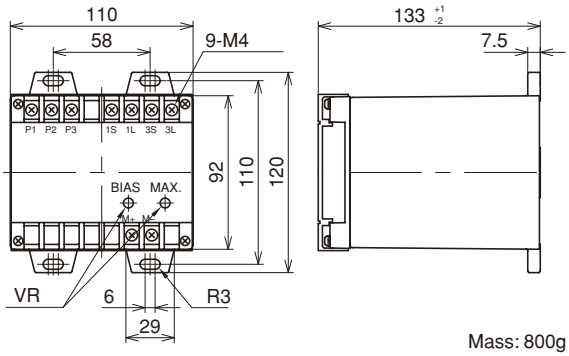

Mass: 800g

CT for AC ammeter

MR-CTN (0.35 to 25A/10mA)

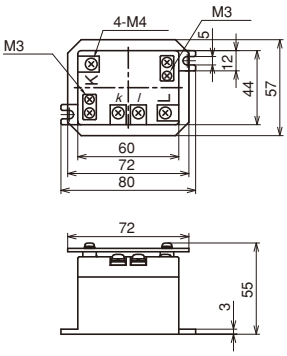

Mass: MR-CTN (0.35 to 25A/10mA) 160g

Frequency meter

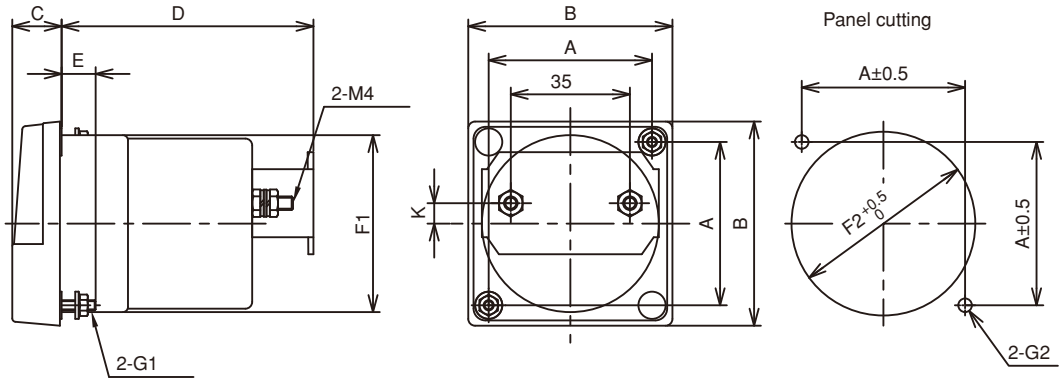

Type	A	B	C	D	E	F1	F2	G1	G2	K	Mass (g)
FRN-60F	48	60	14.5	74	10	ø52	ø54	M3 screw	ø4	6	150
FRN-80F	64	80	14.5	74	10	ø65	ø67	M3 screw	ø4	0	180
FRN-100F	80	100	16	75.5	15	ø85	ø87	M4 screw	ø5.5	0	300
FRN-120F	100	123	20	86	15	ø110	ø112	M5 screw	ø7	0	420

■ Wiring diagrams
Ammeter, voltmeter

AC ammeter
(For direct connection)

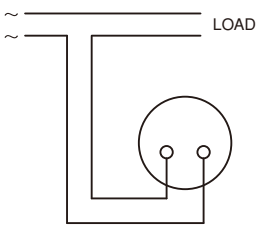

AC ammeter
(For connection to CT or MR-CTN)

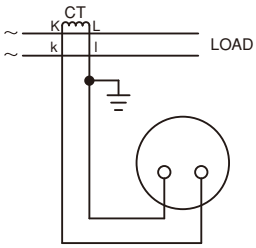

AC ammeter
(For connection to CT and MR-CTN)

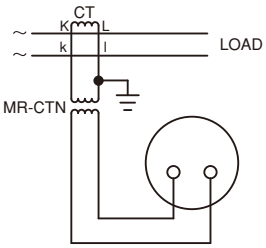

AC voltmeter

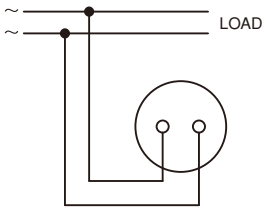

AC voltmeter
(For connection to VT)

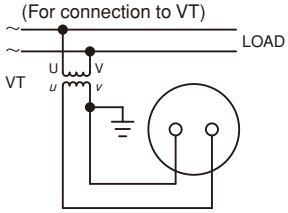

AC voltmeter 600V (FSN type)
(For connection to series resistor)

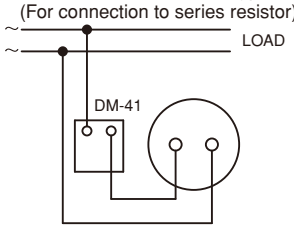

AC voltmeter 750V to 1kV (FRN type)
(For connection to series resistor)

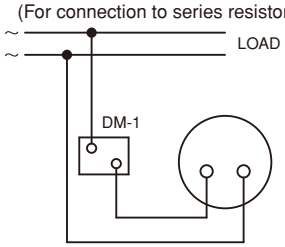

AC voltmeter 3 to 25kV (FRN type)
(For connection to series resistor)

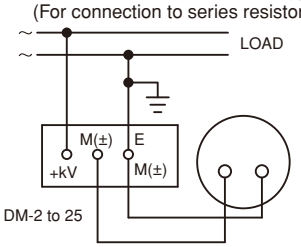

DC ammeter

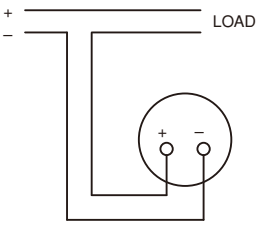

DC ammerter
(For connection to shunt)

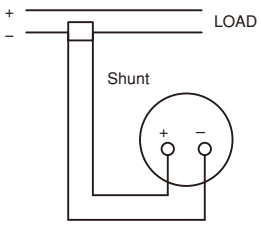

DC voltmeter

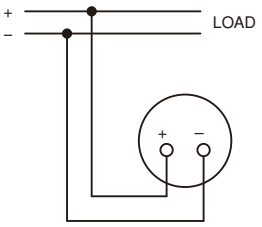

AC voltmeter
(For connection to series resistor (DM1))

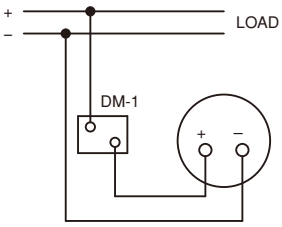

AC voltmeter
(For connection to series resistor (DM2 to DM25))

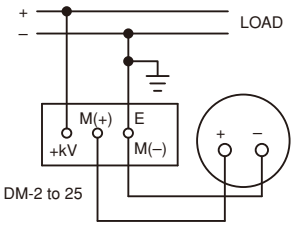

Panel Instruments
F type

■ Wiring diagrams

Wattmeter

• FRN-60W1, FRN-80W1

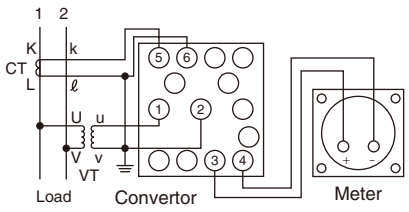

• FRN-60W3, FRN-80W3

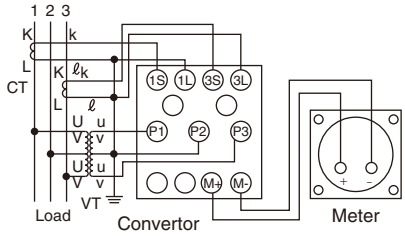

• FRN-100W1, FRN-120W1

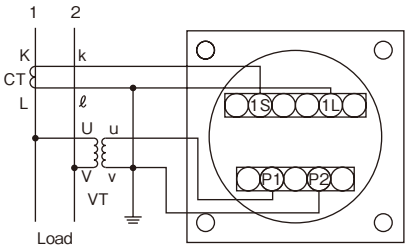

• FRN-100W3, FRN-120W3

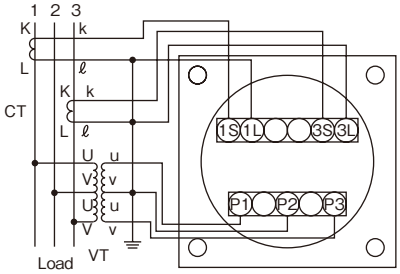

D1

Varmeter

• FRN-60VR3, FRN-80VR3

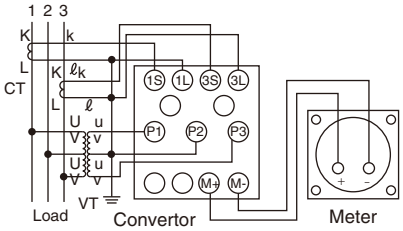

• FRN-100VR3, FRN-120VR3

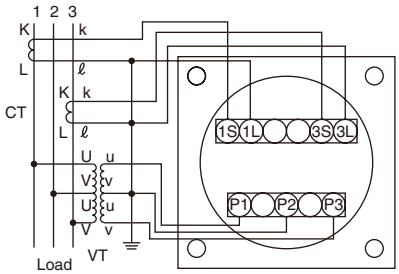

Power factor meter

• FRN-60PF3, FRN-80PF3

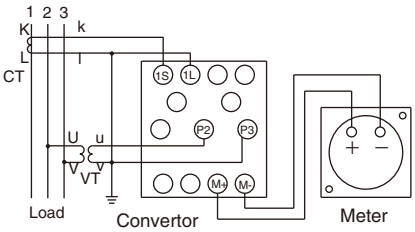

• FRN-100PF3, FRN-120PF3

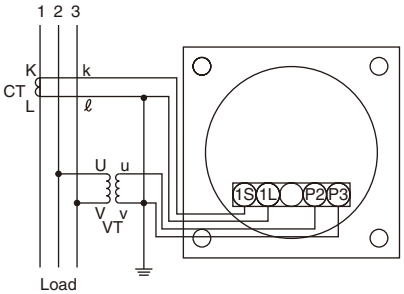

Frequency meter

(For direct connection)

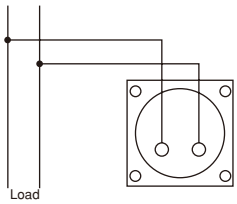

(For connection to VT)

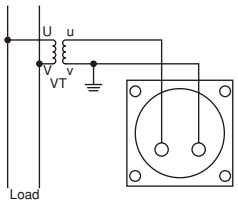

Transducers
WS2 Series

The WS2 Series transducer is designed to be mounted on a 16-slot base unit and equipped with an individual power switch. The terminals of conventional plug-in type transducers were hidden after the main unit was mounted. The new WS2 Series transducer makes it possible to use a tester with the main unit mounted. (When a multiple-slot base unit is used)

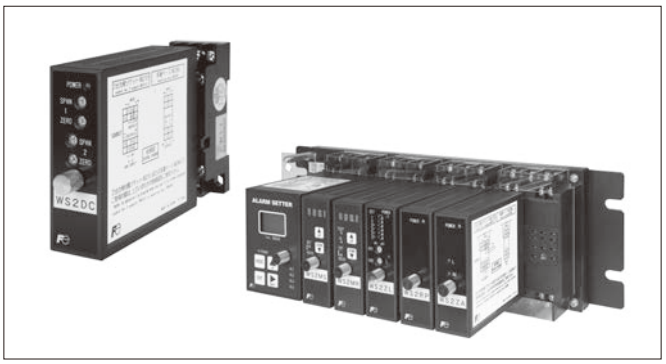

■ Features

- The WS2 Series transducer is recommended for those customers who use transducers for instruments mounted in series.
- A multiple-slot base unit contains a power switch and makes an individual switch box no longer necessary.
- Conforming to CE marking (except for some models)

■ List of product models

Product model and name	Type	Input	First output	Second output
Multiple-slot base unit for mounting 8 units	**WS2BA-08**	—	—	—
Multiple-slot base unit for mounting 16 units	**WS2BA-16**			
DC insulated transducer (isolator)	**WS2DC**	DC voltage and current	DC voltage and current	DC voltage and current
DC insulated transducer (high-speed isolator)	**WS2HS**			
DC insulated transducer (ultra-high-speed isolator)	**WS2US**			
Distributor (insulated type)	**WS2DY**	4 to 20 mA DC (24 V DC)		
Thermocouple transducers	**WS2TC**	B, R, S, K, E, J, T, and N thermocouples		
Resistance temperature sensor transducer	**WS2PT**	Pt100, 50, JPt100Ω		
Potentiometer transducer	**WS2PM**	0 to 100 Ω and up to 10 kΩ		
Tachogenerator transducer	**WS2TG**	Max. 220 V or 24 V_{P-P} 0 to 1 kHz		
AC voltage transducer	**WS2CV**	0 to 300V AC		
AC current transducer	**WS2CA**	0 to 5A AC		
Analog signal selector	**WS2RP**	4 to 20mA DC, 1 to 5V DC	4 to 20mA DC, 1 to 5V DC	4 to 20mA DC, 1 to 5V DC
Overspeed detector (monitor relay)	**WS2MR**	No-voltage contact, open collector signal	Optical MOSFET, 1NO contacts	Optical MOSFET, 1NO contacts
Analog output unit (manual setter)	**WS2MS**	—	DC voltage and current	DC voltage and current
Zero speed detector for pulse input	**WS2ZL**	Generator speed (10 kHz)	Optical MOSFET, 1NO contacts	—
Zero speed detector for sine wave input	**WS2ZA**	Generator speed (1 kHz) 220V	Optical MOSFET, 1NO contacts	Optical MOSFET, 1NO contacts
Slow pulse (F/V) transducer	**WS2SP**	0 to10kHz	DC voltage and current	Open collector
Alarm setter	**WS2AS**	DC voltage and current	Relay contacts	Relay contacts
Socket (for stand-alone installation with 1 output)	**WS211**	—	—	—
Socket (for stand-alone installation with 2 outputs)	**WS212**			

■ Common specifications

Item		Specifications	
Inrush current of external power supply (per unit)		At 24 V DC: approx. 2.4 A, 2.7 ms or less; at 48 V DC: approx. 2.4 A, 1.0 ms or less; at 110 V DC: approx. 2.2 A, 0.6 ms or less; at 110 V AC: approx. 3.2 A, 0.6 ms or less; at 220 V AC: approx. 6.3 A, 0.6 ms or less	
Instantaneous overload	Input	Twice the rated voltage for 10 seconds	
		10 times the rated current for 5 seconds	
	External power supply	1.5 times the rated voltage for 10 seconds	
Continuous overload	Input	1.2 times the rated voltage continuously	
	External power supply	1.2 times the rated voltage continuously	
Insulation resistance		Between all electric circuits and enclosure	50 MΩ or over on 500 V DC megger
		Between input and output terminals	
		Between input/output terminals and external power supply terminal	
		Between alarm outputs 1 and 2	50 MΩ or over on 500 V DC megger
		Between first and second outputs	
		Between input/output/selectional signal terminals and external power supply	
Dielectric strength		Between all electric circuits and enclosure	2,000 V AC (50/60 Hz) for 1 minute WS2HS and WS2US: 1500 V AC (50/60 Hz) for 1 minute between input and output terminals
		Between input and output terminals	
		Between input/output terminals and external power supply terminal	
		Between alarm outputs 1 and 2	500 V AC (50/60 Hz) for 1 minute
		Between first and second outputs	
		Between input/output/selectional signal terminals and external power supply	2,000 V AC (50/60 Hz) for 1 minute
Lightning impulse withstand voltage		Between all electric circuits and enclosure	5 kV 1.2/50 μs applied three times to each of the positive and negative poles
Vibration		Apply vibrations of 16.7 Hz and 4 mm in double amplitude to each of the X-, Y-, and Z-directions for an hour.	
Shock		Apply a shock of 294 m/s^2 to each of the X-, Y-, and Z-directions three times during forward and reverse rotations	
Service temperature and humidity ranges		-10 to +55°C, 5 to 90% RH (no condensation)	
Storage temperature range		-20 to +70°C	
Outer surface color		Munsell N1.5 (black)	
Enclosure material		Fire-resistant ABS resin (V-0)	

Transducers
Multiple-slot Base Unit (with Individual Power Switches) WS2BA Series

The multiple-slot base unit is designed to collectively mount compact signal converters for instruments supporting many points of measurement or alarm setters used by plants engaged in various kinds of operations.

■ Features

- The mounted units can be turned on and off individually with the appropriate power switches.
- Wiring can be made more efficiently by supplying the power collectively to the mounted units.
- The multiple-slot base unit comes in two types — 8-slot and 16-slot types.
- IEC 35-mm rail mounting types only.

■ Type number nomenclature

WS2BA−□□

Number of mountable units

16	16
08	8

If transducers of different withstand voltages are mounted together and subjected to a dielectric strength test, the transducers may be damaged by the test voltage.
Perform a dielectric strength test on transducers of different withstand voltages with extreme care.
To perform a dielectric strength test between an input and an output, perform it on individual transducers or on individual multiple-slot base units, or on a combination of units of the same strength with a test voltage all units can withstand.
The E (ground) terminals connected to all ground terminals for SPD. However, the E terminals are insulated from the base unit (frame).

WS2BA-08
289×99×62mm/1.0kg

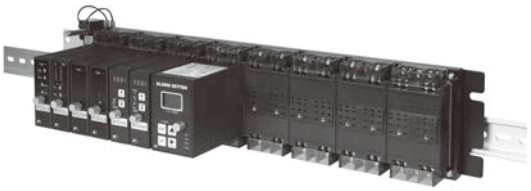

WS2BA-16
479 × 99 × 62mm/1.6kg
(The masses and dimensions shown do not include those of transducers or other units.)

Caution: Use external power supplies of the same specifications for all of the transducers to be mounted.

D1

■ Dimensions, mm / external wiring diagram

・Dimension (WS2BA-16)

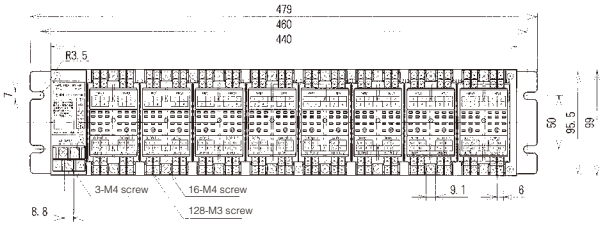

Rail mounting

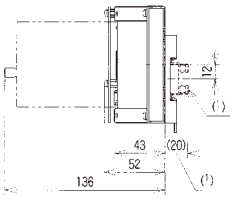

*1 The figure shows IEC 35-mm rail (height: 15 mm) mounting.

Use a 35-mm-wide rail (reinforced type) compatible with IEC or DIN standards.
<<Recommended rail>> TH35-15AL manufactured by Fuji Electric FA Components & Systems Co., Ltd.

・External wiring diagram

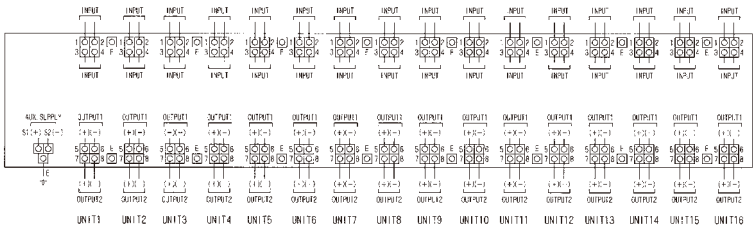

*1 All E terminals are connected inside. In addition, the E terminals are insulated from the base unit (frame ground).
*2 An alarm setter WS2AS uses slots for two transducers.

・Dimensions (WS2BA-08)

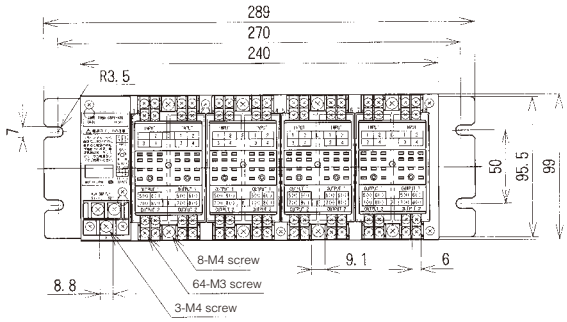

・Figure of units mounted on WS2BA

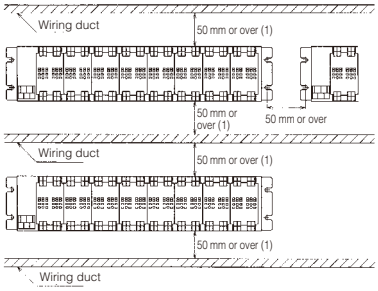

*2 When mounting units, keep the clearances shown in the figure above for the purpose of heat radiation from the units. When using accessories or optional items, secure some allowance with space required for wiring, etc. taken into account.

The DC insulated transducer insulates and converts DC signals into signals common to systems. Since its input and output are insulated from each other, the transducer is available for exchanging insulated signals between measuring systems, blocking noise, preventing sneak currents in control circuits, sending output signals directly to remote locations, and other applications.
Up to 16 units can be mounted on a single multiple-slot base unit.

Only the transducer equipped with a 24 V DC external power supply conforms to the CE marking.

■ Features

- The dielectric strength among the input, the output, the external power supply, and the enclosure is 2000 V AC (50/60 Hz) for 1 minute, insulated.
- Whether the power is applied can be identified with an LED.

■ Specifications

Type		WS2DC		
Insulated system		Photocoupler insulation		
Standard accuracy		±0.1%		
Temperature characteristic		0.2%/10°C		
Response time		0.1 seconds or shorter (0 -> 90%)		
Input signal (input impedance)	Voltage (DC)	Up to ±300 V DC (approx. 1 MΩ)		
	Current (DC)	Up to ±50 mA DC (approx. 100 Ω)		
First output signal (load resistance)	Voltage (DC)	1 V DC or less (200 Ω or more)	5 V DC or less (600 Ω or more)	10 V DC or less (2 kΩ or more)
	Current (DC)	1 mA DC (10 kΩ or less)	5 mA DC or less (2 kΩ or less)	20 mA DC or less (750 Ω or less)
Second output signal (load resistance)	Voltage (DC)	1 V DC or less (200 Ω or more)	5 V DC or less (1 kΩ or more)	
	Current (DC)	1 mA DC (7 kΩ or less)	5 mA DC or less (1.4 kΩ or less)	20 mA DC or less (350 Ω or less)
Adjustment	Zero adjustment range	±2%		
	Span adjustment range	Approx. 98 to 102%		
Insulation resistance		50 MΩ or more (500 V DC)		
Dielectric strength	Between input/output/ power supply and enclosure	2000 V AC (for 1 minute)		
	Between first and second outputs	500 V AC (for 1 minute)		
External power supply	AC	AC80 ～ 264V, 50/60Hz		
	DC	DC24V, DC80 to 264V, DC48V (DC40 ～ 56V)		
VA consumption * With regard to the 48 V DC transducer, only one without a second output can be manufactured.		At 110V AC At 220V AC At 24V DC At 48V DC At 110VDC	Approx. 3.5VA Approx. 4.5VA Approx. 2.8W Approx. 1.6W※ Approx. 2.0W	
Service temperature and humidity ranges		-10 to +55°C, 5 to 90% RH (No condensation)		
Mass		When a socket is not equipped: Approx. 130 g		

■ Available range of products

- Input signal
  Current input: From 10 μA to 50 mA
  Voltage input: From 10 mV to 300 V
- Output signal
  Current output: From -5 to 20 mA
  Voltage output: From -10 to 10 V

Current input: Inputs from 10 to 499 μA are different in standard accuracy, temperature characteristic, etc. from standard inputs.
Voltage input: Inputs from 10 to 49 mV are different in standard accuracy, temperature characteristic, etc. from standard inputs.

* CE marking product compatible standards

- EMC compatible standards
  EMI (Emission) EN61000-6-4
  EMS (Immunity) EN61000-6-2
- Safety standards
  CAT III (maximum circuit voltage: 300 V), pollution degree 2

■ External connection diagram

Please refer to page D1-78 to D1-80.

■ Type number nomenclature

WS2DC – □□ Y □ □ □ Y 1

Input signal

23	0 to 50mV DC
33	0 to 60mV DC
11	0 to 100mV DC
12	0 to 1V DC
13	0 to 5V DC
14	0 to 10V DC
15	1 to 5V DC
50	±50mV DC
51	±60mV DC
52	±100mV DC
53	±1V DC
42	±5V DC
24	±10V DC
27	0 to 1mA DC
54	0 to 5mA DC
55	0 to 10mA DC
56	0 to 16mA DC
16	4 to 20mA DC
57	±1mA DC
58	±5mA DC
59	±10mA DC
ZZ	Special

First output signal

F	0 to 100mV DC
D	0 to 1V DC
B	0 to 5V DC
C	0 to 10V DC
A	1 to 5V DC
S	±5V DC
E	±10V DC
J	0 to 1mA DC
K	0 to 5mA DC
L	0 to 10mA DC
M	0 to 16mA DC
R	1 to 5mA DC
H	4 to 20mA DC
G	±1mA DC
U	±5mA DC
Z	Special

External power supply

0	80 to 264V AC·DC
3	24V DC (19 to 30V DC)
7	48V DC (40 to 56V DC)

Second output signal

F	0 to 100mV DC
D	0 to 1V DC
B	0 to 5V DC
A	1 to 5V DC
S	±5V DC
J	0 to 1mA DC
K	0 to 5mA DC
L	0 to 10mA DC
M	0 to 16mA DC
R	1 to 5mA DC
H	4 to 20mA DC
G	±1mA DC
U	±5mA DC
Y	Not provided
Z	Special

Design order

■ Block diagram

- Single-output product

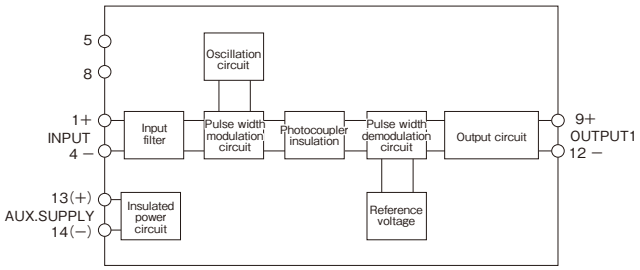

- Double-output product

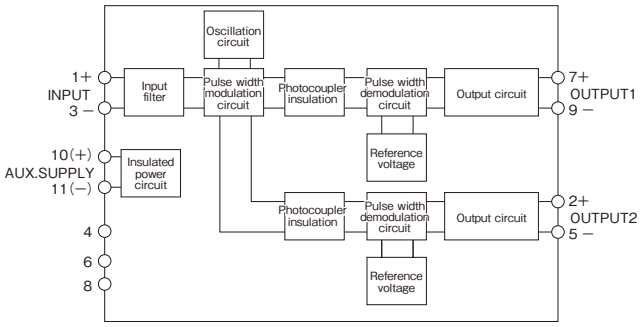

Transducers
Distributor (Insulated Type) WS2DY Series

This transducer can supply the power to a two-wire type transmitter, receives signals of 4 to 20 mA DC from the transmitter, and insulates and outputs a DC signal proportional to the signal. Up to 16 units can be mounted on a single multiple-slot base unit.

Only the transducer equipped with a 24 V DC external power supply conforms to the CE marking.

■ Features

- The dielectric strength among the input, the output, the external power supply, and the enclosure is 2000 V AC (50/60 Hz) for 1 minute, insulated.
- A short-circuit protection circuit for transmitter (limited current: 23 to 30 mA) is contained in the transducer
- Whether the power is applied can be identified with an LED.

■ Specifications

Type		WS2DY		
Insulated system		Photocoupler insulation		
Power supply for transmitter	Voltage	24 to 28 V DC (in unloaded condition)		
	Current	Max. 22 mA DC (short-circuit current: approx. 30 mA)		
	Allowable short-circuit time	Unlimited		
Standard accuracy		±0.1%		
Temperature characteristic		0.2%/10℃		
Response time		0.5 seconds or shorter (0 -> 90%)		
Input signal (input impedance)	Current (DC)	DC4 to 20mA (250Ω)		
First output signal (load resistance)	Voltage (DC)	1 V DC or less (200 Ω or more)	5 V DC or less (600 Ω or more)	10 V DC or less (2 kΩ or more)
	Current (DC)	1mA DC (10 kΩ or less)	5 mA DC or less (2 kΩ or less)	20 mA DC or less (750 Ω or less)
Second output signal (load resistance)	Voltage (DC)	1 V DC or less (200 Ω or more)	5 V DC or less (1 kΩ or more)	
	Current (DC)	1mA DC (7 kΩ or less)	5 mA DC or less (1.4 kΩ or less)	20 mA DC or less (350 Ω or less)
Adjustment	Zero adjustment range	±2%		
	Span adjustment range	Approx. 98 to 102%		
Insulation resistance		50 MΩ or more (500 V DC)		
Dielectric strength	Between input/output/power supply and enclosure	2000 V AC (for 1 minute)		
	Between first and second outputs	500 V AC (for 1 minute)		
External power supply	AC	80 to 264V AC, 50/60Hz		
	DC	24V DC, 80 to 264V DC		
VA consumption		At 110 V AC At 220V AC At 24V DC At 110V DC	Approx. 5.0 VA Approx. 6.0VA Approx. 4.4W Approx. 3.0W	
Service temperature and humidity ranges		-10 to +55°C, 5 to 90% RH (No condensation)		
Mass		When a socket is not equipped: Approx. 130 g		

■ Available range of products

- Input signal
  Current input span: 12 mA or over
  Full input: Max. 20 mA
- Output signal
  Current output: From 1 to 20 mA
  Voltage output: From 10 mV to 10 V

* CE marking product compatible standards

- EMC compatible standards
  EMI (Emission) EN61000-6-4
  EMS (Immunity) EN61000-6-2
- Safety standards
  CAT III, pollution degree 2

- Power supply for transmitter

If an overcurrent exceeding the current capacity, such as an inrush current or short-circuit, flows through a power terminal for transmitter, the built-in short-circuit protection circuit will work to reduce the supply voltage, limit the supply current, and thereby prevent damage to the distributor.

- Line resistance (between transmitter and distributor)

$$\text{Line resistance} \leq \frac{19\text{ V (*)} - \text{Minimum pick-up voltage of transmitter}}{0.02\text{ A}}$$

(Note:*) Minimum supply voltage (24 V) - internal voltage drop (5 V) = 19 V

■ External connection diagram

Please refer to page D1-78 to D1-80.

■ Type number nomenclature

WS2DY– 01 Y □ □ □ Y 1

Supply voltage for transmitter

01	24 to 28V DC

First output signal

F	0 to 100mV DC
D	0 to 1V DC
B	0 to 5V DC
C	0 to 10V DC
A	1 to 5V DC
J	0 to 1mA DC
K	0 to 5mA DC
L	0 to 10mA DC
M	0 to 16mA DC
R	1 to 5mA DC
H	4 to 20mA DC
Z	Special

Second output signal

F	0 to 100mV DC
D	0 to 1V DC
B	0 to 5V DC
A	1 to 5V DC
J	0 to 1mA DC
K	0 to 5mA DC
L	0 to 10mA DC
M	0 to 16mA DC
R	1 to 5mA DC
H	4 to 20m
Y	Not provided
Z	Special

External power supply

0	80 to 264V AC·DC
3	24V DC(19 to 30V DC)

Design order

■ Block diagram

- Single-output product

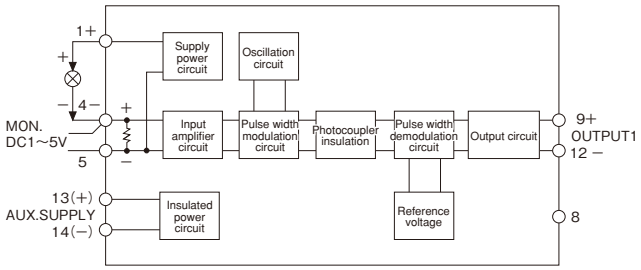

- Double-output product

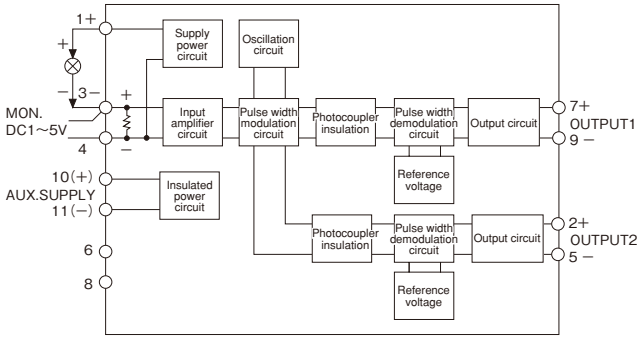

Using the thermo electromotive force of thermocouples complying with JIS standards as input, the thermocouple transducer insulates and converts input and output into DC signals proportional to temperature. Up to 16 units can be mounted on a multiple-slot base unit.

■ Features

- The dielectric strength among the input, the output, the external power supply, and the enclosure is 2000 V AC (50/60 Hz) for 1 minute, insulated.
- Whether the power is applied can be identified with an LED.
- The upper limit burnout or lower limit burnout can be designated as the burnout direction.
- The transducer can be used as a single unit by using an optional rail mounting type of socket.

Only the transducer equipped with a 24 V DC external power supply conforms to the CE marking.

■ Specifications

Type		**WS2TC**		
Insulated system		Photocoupler insulation		
Standard accuracy (excluding standard contact compensation error)		K, E, J, T, and N thermocouples S and R thermocouples	±0.4% ±0.5%	
Temperature characteristic		0.25%/10°C		
Response time		0.5 seconds or shorter (0 -> 90%)		
Standard contact compensation accuracy		K, E, J, T, and N thermocouples S and R thermocouples	0.5°C or below 1.0°C or below	
Burnout time		10 seconds or shorter		
Allowable input wiring resistance		Resistance value of reciprocal circuit connected, such as thermocouple or compensation conductor: 500 Ω or less		
Input/Output thermocouple		K, E, J, T, S and R thermocouples		
First output signal (load resistance)	Voltage (DC)	1 V DC or less (200 Ω or more)	5 V DC or less (600 Ω or more)	10 V DC or less (2 kΩ or more)
	Current (DC)	1mA DC (10 kΩ or less)	5 mA DC or less (2 kΩ or less)	20 mA DC or less (750 Ω or less)
Second output signal (load resistance)	Voltage (DC)	1 V DC or less (200 Ω or more)	5 V DC or less (1 kΩ or more)	
	Current (DC)	1mA DC (7 kΩ or less)	5 mA DC or less (1.4 kΩ or less)	20 mA DC or less (350 Ω or less)
Adjustment	Zero adjustment range	±2%		
	Span adjustment range	Approx. 98 to 102%		
Insulation resistance		50 MΩ or more (500 V DC)		
Dielectric strength	Between input/output/power supply and enclosure	2000 V AC (for 1 minute)		
	Between first and second outputs	500 V AC (for 1 minute)		
External power supply	AC	80 to 264V AC, 50/60Hz		
	DC	24V DC, 80 to 264V DC		
VA consumption		At 110 V AC At 220V AC At 24V DC At 110V DC	Approx. 4.0 VA Approx. 5.0VA Approx. 3.3W Approx. 2.5W	
Service temperature and humidity ranges		-10 to +55°C, 5 to 90% RH (No condensation)		
Mass		When a socket is not equipped: Approx. 130 g		

■ Available range of products

• Input signal

B: 0 to 1820°C
R: –50 to 1760°C
S: –50 to 1760°C
K: –270 to 1370°C
E: –270 to 1000°C
J: –210 to 1200°C
T: –270 to 400°C
N: –270 to 1300°C
ZZ: Please consult us because the temperature range depends on the specifications of the thermocouple.

• Output signal

Current output: From 1 to 20 mA
Voltage output: From 10 mV to 10 V *2

*1 T: Temperature ranges from 0 to 100°C and from 0 to 150°C are available as special specifications.
*2 Negative output and output beyond this range are not available.

* CE marking product compatible standards

• EMC compatible standards

EMI (Emission) EN61000-6-4
EMS (Immunity) EN61000-6-2

• Safety standards

CAT III, pollution degree 2

• Cold junction compensation incorporated

Thermo electromotive force used as input varies as the temperature of the input terminal changes. The temperature of the terminal is measured by the RJC (sensor for compensation), and the change in the thermo electromotive force resulting from the change in the temperature will be compensated. Do not change the combination of the RJC and the transducer set when delivered from the plant.

• Compensation conductor

The compensation conductor is intended to compensate for the temperature difference between the thermocouple terminal and the transducer terminal. Note that the type of the compensation conductor depends on the type of the thermocouple to be used.

■ External connection diagram

Please refer to page D1-78 to D1-80.

■ Type number nomenclature

WS2TC– □□□□□□□1

Input/Output thermocouple

B, R, S, K, E, J, T, N

Measurable temperature range

		B	R	S	K	E	J	T	N
9	0 to 150℃					○	○		
10	0 to 200℃					○	○	○	
11	0 to 250℃				○	○	○	○	
12	0 to 300℃				○	○	○	○	○
13	0 to 350℃				○	○	○	○	○
14	0 to 400℃				○	○	○		○
33	0 to 450℃				○	○	○		○
15	0 to 500℃				○	○	○		○
16	0 to 600℃				○	○	○		○
23	0 to 700℃				○	○	○		○
17	0 to 800℃				○				○
24	0 to 900℃				○				○
18	0 to 1000℃		○	○	○				○
25	0 to 1100℃		○	○	○				○
19	0 to 1200℃		○	○	○				○
26	0 to 1300℃		○	○					
20	0 to 1400℃		○	○					
27	0 to 1500℃		○	○					
28	600 to 1600℃	○							
29	600 to 1700℃	○							
ZZ	Special								

Design order

Burnout direction

1	Upper limit
2	Lower limit

External power supply

0	80 to 264V AC·
3	24V DC (19 to 30V)

Second output signal

A	1 to 5V DC	K	0 to 5mA DC
B	0 to 5V DC	L	0 to 10mA DC
D	0 to 1V DC	M	0 to 16mA DC
F	0 to 100mV DC	R	1 to 5mA DC
H	4 to 20mA DC	Y	Not provided
J	0 to 1mA DC	Z	Special

First output signal

A	1 to 5V DC	J	0 to 1mA DC
B	0 to 5V DC	K	0 to 5mA DC
C	0 to 10V DC	L	0 to 10mA DC
D	0 to 1V DC	M	0 to 16mA DC
F	0 to 100mV DC	R	1 to 5mA DC
H	4 to 20mA DC	Z	Special

■ Block diagram

• Single-output product

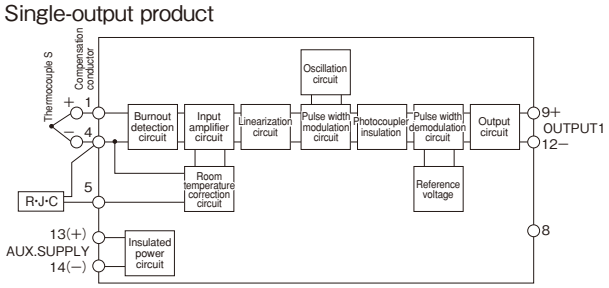

• Double-output product

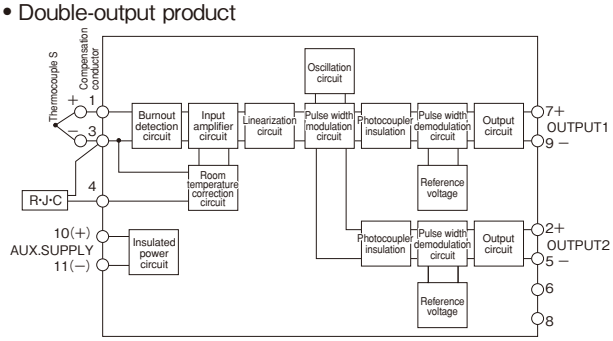

Transducers
Resistance Temperature Sensor Transducer WS2PT Series

Using the resistance value of a three-wire type resistance temperature sensor complying with JIS standards as input, the resistance temperature sensor transducer insulates and converts input and output into DC signals proportional to temperature. Up to 16 units can be mounted on a multiple-slot base unit.

■ Features

- The dielectric strength among the input, the output, the external power supply, and the enclosure is 2000 V AC (50/60 Hz) for 1 minute, insulated.
- Whether the power is applied can be identified with an LED.
- The upper limit burnout or lower limit burnout can be designated as the burnout direction.
- The conductor type of this transducer is a three-wire type.
- The transducer can be used as a single unit by using an optional rail mounting type of socket.

■ Specifications

Type		WS2PT		
Insulated system		Photocoupler insulation		
Standard accuracy		±0.3%		
Temperature characteristic		0.3%/10℃		
Response time		0.5s or less (0→90%)		
Burnout time		10 seconds or shorter		
Allowable input wiring resistance		50 Ω or less per wire (Use three wires of the same resistance value.)		
Input resistance temperature sensor		Pt100Ω, JPt100Ω, Pt50Ω		
First output signal (load resistance)	Voltage (DC)	1 V DC or less (200 Ω or more)	5 V DC or less (600 Ω or more)	10 V DC or less (2 kΩ or more)
	Current (DC)	1mA DC (10 kΩ or less)	5 mA DC or less (2 kΩ or less)	20 mA DC or less (750 Ω or less)
Second output signal (load resistance)	Voltage (DC)	1 V DC or less (200 Ω or more)	5 V DC or less (1 kΩ or more)	
	Current (DC)	1mA DC (7 kΩ or less)	5 mA DC or less (1.4 kΩ or less)	20 mA DC or less (350 Ω or less)
Adjustment	Zero adjustment range	±2%		
	Span adjustment range	Approx. 98 to 102%		
Insulation resistance		50 MΩ or more (500 V DC)		
Dielectric strength	Between input/output/power supply and enclosure	2000V AC (for 1 minute)		
	Between first and second outputs	500V AC (for 1 minute)		
External power supply	AC	80 to 264V AC, 50/60Hz		
	DC	24V DC, 80 to 264V DC		
VA consumption		At 110 V AC Approx. 4.5 VA At 220V AC Approx. 5.5VA At 24V DC Approx. 3.3W At 110V DC Approx. 2.5W		
Service temperature and humidity ranges		-10 to +55°C, 5 to 90% RH (No condensation)		
Mass		When a socket is not equipped: Approx. 130 g		

Available range of products

- Input signal

Ni 508.4 Ω: 50°C or over (specified current: 1 mA)
Cu 100 Ω: 50°C or over (specified current: 2 mA)
Cu 50 Ω: 100°C or over (specified current: 2 mA)
Pt: Up to 850°C
JPt: Up to 500°C

- Output signal

Current output: From 1 to 20 mA
Voltage output: From 10 mV to 10 V

* Negative output and output beyond this range are not available.

* CE marking product compatible standards

- EMC compatible standards

EMI (Emission) EN61000-6-4
EMS (Immunity) EN61000-6-2

- Safety standards

CAT III, pollution degree 2

- Specified current

The specified current means the current flowing into the resistance temperature sensor, and the change in the resistance value is measured based on the voltage drop caused by the current. The standard specified current is 2 mA.• Line resistance (between transmitter and distributor)

- Resistance range of external conductor

The resistance of external conductors means the resistance value of the conductor excluding the resistance value of the resistance element to be measured. Although the effect of the resistance of the external conductors is compensated when the resistance value is equal, it will be processed as an error when the resistance value is different among the conductors. Use the transducer within the general fluctuation range of 50 Ω or less per conductor.

■ External connection diagram

Please refer to page D1-78 to D1-80.

Only the transducer equipped with a 24 V DC external power supply conforms to the CE marking.

■ Type number nomenclature

WS2PT– □□□□□□□1

Input resistance temperature sensor

1	JPt100Ω
2	Pt100Ω
3	Pt50Ω

Measurable temperature range

		JPT100Ω	PT100Ω	PT50Ω
10	0 to 50℃	○	○	
50	0 to 60℃	○	○	○
51	0 to 80℃	○	○	○
11	0 to 100℃	○	○	○
52	0 to 120℃	○	○	○
12	0 to 150℃	○	○	○
13	0 to 200℃	○	○	○
15	0 to 300℃	○	○	○
53	−10 to +40℃	○	○	○
54	−10 to +50℃	○	○	○
55	−10 to +60℃	○	○	○
56	−20 to +40℃	○	○	○
57	−20 to +50℃	○	○	○
58	−20 to +60℃	○	○	○
20	−20 to +80℃	○	○	○
59	−20 to +100℃	○	○	○
40	−20 to +120℃	○	○	○
41	−30 to +50℃	○	○	○
42	−30 to +60℃	○	○	○
43	−30 to +80℃	○	○	○
22	−50 to +50℃	○	○	○
44	−50 to +60℃	○	○	○
45	−50 to +80℃	○	○	○
23	−50 to +100℃	○	○	○
46	−50 to +120℃	○	○	○
24	−50 to +150℃	○	○	○
47	−70 to +30℃	○	○	○
25	−100 to +100℃	○	○	○
ZZ	Special	○	○	○

Design order

Burnout direction

1	Upper limit
2	Lower limit

External power supply

0	80 to 264V AC·DC
3	24V DC(19 to 30V)

Second output signal

A	1 to 5V DC	K	0 to 5mA DC
B	0 to 5V DC	L	0 to 10mA DC
D	0 to 1V DC	M	0 to 16mA DC
F	0 to 100mV DC	R	1 to 5mA DC
H	4 to 20mA DC	Y	Not provided
J	0 to 1mA DC	Z	Special

First output signal

A	1 to 5V DC	J	0 to 1mA DC
B	0 to 5V DC	K	0 to 5mA DC
C	0 to 10V DC	L	0 to 10mA DC
D	0 to 1V DC	M	0 to 16mA DC
F	0 to 100mV DC	R	1 to 5mA DC
H	4 to 20mA DC	Z	Special

■ Block diagram

- Single-output product

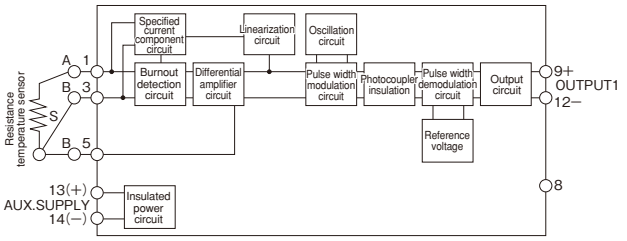

- Double-output product

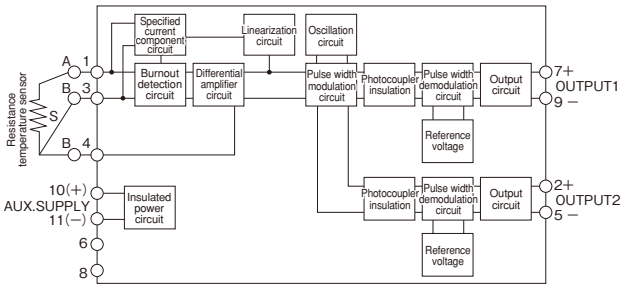

Fuji Electric FA Components & Systems Co., Ltd.
Information subject to change without notice

Mechanical changes in angle and position are replaced by changes in the resistance value of the potentiometer, and this is used as an input, isolated, and converted into a DC signal proportional to the displacement. Up to 16 units can be stored as units in multiple base.

■ Features

- Withstand voltage between input, output, auxiliary power supply and outer case is 2000 VAC (50/60 Hz) for 1 minute isolation.
- It can support any resistance of potentiometer from 100 Ω to 10 kΩ.
- Power applied status can be checked with the LED.

■ Adjustment method

Adjust the outputs ZERO VR and SPAN VR of the front VR according to the potentiometer input actually used. The variable range of outputs ZERO VR and SPAN VR is as follows:
(ZERO VR: 0 to 50% of nominal resistance value, SPAN VR: 50 to 100% of nominal resistance value)

■ Specifications

Type		WS2PM		
Isolation method		Photocoupler isolation		
Standard accuracy		± 0.3 %		
Temperature characteristics		0.3 %/10 °C		
Response time		0.5 s or less (0 → 90%)		
Input signal		Potentiometer total resistance 100 to 10 kΩ		
Input span		50% or above of the total resistance of the potentiometer		
First output signal (Load resistance)	Voltage (DC)	1 VDC or less (200 Ω or above)	5 VDC or less (600 Ω or above)	10 VDC or less (2 kΩ or above)
	Current (DC)	1 mADC (10 kΩ or less)	5 mADC or less (2 kΩ or less)	20 mADC or less (750 Ω or less)
Second output signal (Load resistance)	Voltage (DC)	1 VDC or less (200 Ω or above)	5 VDC or less (1 kΩ or above)	
	Current (DC)	1 mADC (7 kΩ or less)	5 mADC or less (1.4 kΩ or less)	20 mADC or less (350 Ω or less)
Adjustment	Zero adjustment range	Approx. 0 to 50% of the total resistance value		
	Span adjustment range	Approx. 50 to 100% of the total resistance value		
Isolation resistance		50 MΩ or above (500 VDC)		
Withstand voltage	Between input/output/power supply/outer box	2000 VAC (1 minute)		
	Between the first output and the second output	500 VAC (1 minute)		
Auxiliary power supply	AC	80 to 264 VAC, 50/60 Hz		
	DC	24 VDC, 80 to 264 VDC		
Consumption VA		At 110 VAC Approx. 4.0 VA At 220 VAC Approx. 5.0 VA At 24 VDC Approx. 2.5 W At 110 VDC Approx. 2.5 W		
Operating temperature/humidity range		-10 to 55°C, 5 to 90%RH (no condensation)		
Mass		No socket: approx. 130 g		

■ Adjustment range of output signal

Input type 00F

ZERO adjustment range: 0 to 50% of the nominal resistance value (variable from the front of the converter)

SPAN adjustment range: 50 to 100% of the nominal resistance value (variable from the front of the transducer)

(1) ZERO ... 0%, SPAN ... 100% standard
(2) ZERO…0%, SPAN…50%
(3) ZERO ... 50%, SPAN ... 50% (parallel translation of (2))
(4) ZERO ... 50%, SPAN ... 100% (parallel translation of (1))
* If the input value is within the range of 0 to 50%, it is possible to adjust the output value to 0%.

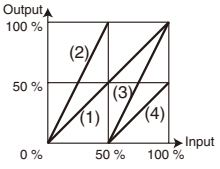

● This instrument is a potential-free type. When shipped from the factory: input: 0 to 10 kΩ/output: graph above (1) (standard).

■ Manufacturing range

● Input signal
Nominal resistance value: 50 Ω to 10 kΩ

● Output signal
Current output: range from -5 mA to 20 mA
Voltage output: range from -10 V to 10 V

Input: For nominal resistance value 50 to 99.99 Ω, it is a special item (standard accuracy ±0.3%)
Output: ±output is a special item.

■ Type (= Product Code) description

WS2PM–□□Y□□□Y1

Input signal

01	0 to 100 Ω or above to 0 to 10 kΩ or less
ZZ	Special

Design rank

Auxiliary power supply

0	80 to 264 V AC/DC
3	24 VDC (19 to 30 VDC)

First output signal

F	0 to 100 mVDC
D	0 to 1 VDC
B	0 to 5 VDC
C	0 to 10 VDC
A	1 to 5 VDC
J	0 to 1 mADC
K	0 to 5 mADC
L	0 to 10 mADC
M	0 to 16 mADC
R	1 to 5 mADC
H	4 to 20 mADC
Z	Special

Second output signal

F	0 to 100 mVDC
D	0 to 1 VDC
B	0 to 5 VDC
A	1 to 5 VDC
J	0 to 1 mADC
K	0 to 5 mADC
L	0 to 10 mADC
M	0 to 16 mADC
R	1 to 5 mADC
H	4 to 20 mDC
Y	None
Z	Special

■ Block diagram

● 1 output product

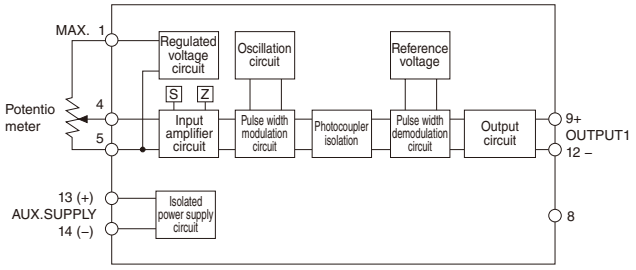

● 2 output product

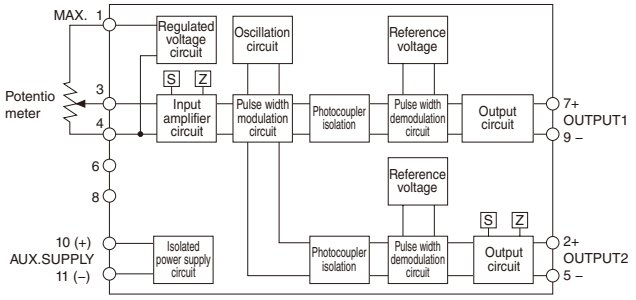

■ External connection diagram

Please refer to page D1-78 to D1-80.

Transducers
Tachogenerator transducer WS2TG Series

Converts it into a DC signal proportional to the number of revolutions (frequency) by insulating the input and output with the tachogenerator attached to the generator, etc. as the input.
Up to 16 units can be stored as units in multiple base.

■ Features

- Withstand voltage between input, output, auxiliary power supply and outer case is 2000 VAC (50/60 Hz) for 1 minute isolation.
- Adjustment of zero span is possible. (±2% adjustable)
- Power applied status can be checked with the LED.

■ Specifications

Type		WS2TG		
Isolation method		Photocoupler isolation		
Standard precision		±0.4% (range of output 10 to 100%)		
Temperature characteristics		0.4 %/10 °C		
Response time		0.5 s or less (input 200 Hz or above) 1.0 s or less (input less than 200 Hz)		
Input signal	AC	Specified voltage of 10 VAC to 250 VAC		
	DC	Specified voltage of 5 VDC_{p-p} to 35 VDC_{p-p}		
First output signal (Load resistance)	Voltage (DC)	5 VDC or less (600 Ω or above)	10 VDC or less (2 kΩ or above)	
	Current (DC)	1 mADC (10 kΩ or less)	5 mADC or less (2 kΩ or less)	20 mADC or less (750 Ω or less)
Second output signal (Load resistance)	Voltage (DC)	5 VDC or less (1 kΩ or above)		
	Current (DC)	1 mADC (7 kΩ or less)	5 mADC or less (1.4 kΩ or less)	20 mADC or less (350 Ω or less)
Adjust-ment	Zero adjustment range	± 2 %		
	Span adjustment range	Approx. 98 to 102%		
Isolation resistance		50 MΩ or above (500 VDC)		
With-stand voltage	Between input/output/ power supply/outer box	2000 VAC (1 minute)		
	Between the first output and the second output	500 VAC (1 minute)		
Auxiliary power supply	AC	80 to 264 VAC, 50/60 Hz		
	DC	24 VDC, 80 to 264 VDC		
Consumer VA		At 110 VAC At 220 VAC At 24 VDC At 110 VDC	Approx. 4.0 VA Approx. 5.0 VA Approx. 2.5 W Approx. 2.5 W	
Operating temperature/humidity range		-10 to 55°C (no condensation)		
Mass		No socket: approx. 130 g		

■ Type (= Product Code) description

WS2TG–□□□□□□Y1

Input signal

1	Sine wave input
A	Pulse input

Input frequency

A	0 to 33.3 Hz
B	0 to 40 Hz
C	0 to 50 Hz
D	0 to 55 Hz
E	0 to 60 Hz
F	0 to 65 Hz
G	0 to 66.6 Hz
H	0 to 100 Hz
I	0 to 120 Hz
J	0 to 166.6 Hz
K	0 to 200 Hz
L	0 to 333.3 Hz
M	0 to 500 Hz
N	0 to 1 kHz
Z	Special

Normal operating voltage range

1	1 to 25 V
2	2 to 50 V
3	5 to 110 V
4	10 to 220 VSpecial
A	$5V_{p-p}$
B	$10V_{p-p}$
C	$12V_{p-p}$
D	$15V_{p-p}$
E	$24V_{p-p}$
Z	Special

First output signal

B	0 to 5 VDC
C	0 to 10 VDC
A	1 to 5 VDC
J	0 to 1 mADC
K	0 to 5 mADC
L	0 to 10 mADC
M	0 to 16 mADC
R	1 to 5 mADC
H	4 to 20 mADC
Z	Special

Second output signal

B	0 to 5 VDC
A	1 to 5 VDC
J	0 to 1 mADC
K	0 to 5 mADC
L	0 to 10 mADC
M	0 to 16 mADC
R	1 to 5 mADC
H	4 to 20 mDC
Y	None
Z	Special

Design rank

Auxiliary power supply

0	80 to 264 V AC/DC
3	24 VDC (19 to 30 VDC)

■ Block diagram

● 1 output product

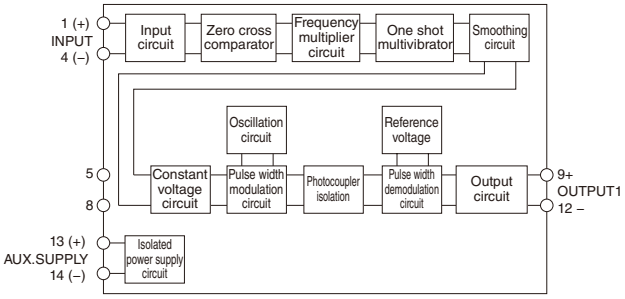

● 2 output product

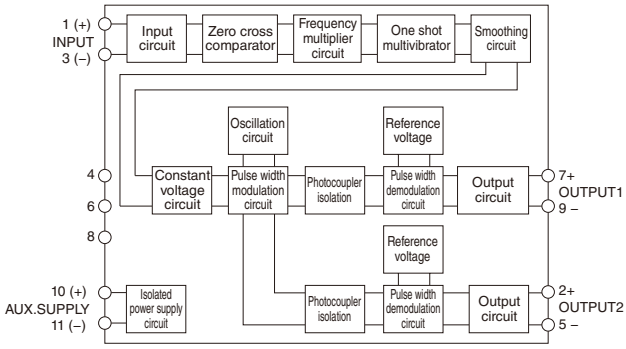

■ Manufacturing range

● Input signal
Input type: Please contact us for other than the above.
Input frequency: range from 30 Hz to 10 kHz*
Normal operating voltage range:
Range from 10 VAC to 250 VAC
Range from 5 VDC_{p-p}P to 35 VDC_{p-p}

* Input frequency: 1.1 kHz or above and 10 kHz or less is a special item.

● Output signal
Current output: range from 1 mA to 20 mA
Voltage output: range from 4 V to 10 V

■ External connection diagram

Please refer to page D1-78 to D1-80.

Fuji Electric FA Components & Systems Co., Ltd.
Information subject to change without notice

Transducers
AC current transducer WS2CA Series

Converts AC current in a power system into a DC signal proportional to the input. Since the input and the output are isolated, it can be used for delivering isolated signals between measurement systems, cutting noise, preventing wraparound in control circuits, and direct sending of output signals to distance places, etc.
Up to 16 units can be stored as units in multiple base.

■ Features

- Withstand voltage between input, output, auxiliary power supply and outer case is 2000 VAC (50/60 Hz) for 1 minute isolation.
- The withstand voltage between the first output and the second output is 500 VAC (50/60 Hz) for 1 minute.
- Adjustment of zero span is possible. (±2% adjustable)
- Because it is an RMS value calculation method, it can also be used for distorted waveforms and SCR waveforms.
- In live condition, even if the product is removed from the socket, the instrument current transformer (CT) will not be open. (Be sure to use the shunt resistance unit.)
- Power applied status can be checked with the LED.

■ Specifications

Type		WS2CA		
Isolation method		Photocoupler isolation		
Standard precision		± 0.5 %		
Temperature characteristics		0.25 %/10 °C		
Response time		0.25 s or less (0 → 90%)		
Input signal		0 to 1 AAC (0.1 VA) , 0 to 5 AAC (0.3 VA)		
First output signal (Load resistance)	Voltage (DC)	1 VDC or less (200 Ω or above)	5 VDC or less (600 Ω or above)	10 VDC or less (2 kΩ or above)
	Current (DC)	1 mADC (10 kΩ or less)	5 mADC or less (2 kΩ or less)	20 mADC or less (750 Ω or less)
Second output signal (Load resistance)	Voltage (DC)	1 VDC or less (200 Ω or above)	5 VDC or less (1 kΩ or above)	
	Current (DC)	1 mADC (7 kΩ or less)	5 mADC or less (1.4 kΩ or less)	20 mADC or less (350 Ω or less)
Adjust-ment	Zero adjustment range	± 2 %		
	Span adjustment range	Approx. 98 to 102%		
Isolation resistance		50 MΩ or above (500 VDC)		
With-stand voltage	Between input/output/ power supply/outer box	2000 VAC (1 minute)		
	Between the first output and the second output	500 VAC (1 minute)		
Auxiliary power supply	AC	80 to 264 VAC, 50/60 Hz		
	DC	24 VDC, 80 to 264 VDC		
Consumer VA		At 110 VAC Approx. 4.0 VA At 220 VAC Approx. 5.0 VA At 24 VDC Approx. 2.5 W At 110 VDC Approx. 2.5 W		
Operating temperature/humidity range		-10 to 55°C, 5 to 90% RH (no condensation)		
Mass		No socket: approx. 130 g		

Product name/model name	Usage *1, 2	US-1 external dimensions
Shunt resistance unit US-1	1 For 8 pin socket (WS211)	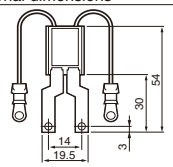
	2 For 11 pin socket (WS212)	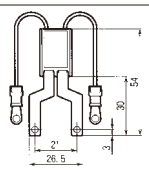
	3 For multiple base	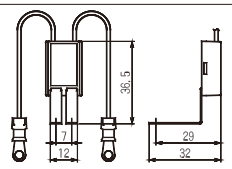

*1 Since the same serial number is indicated on the main unit and US-1, please be sure to confirm that the number matches. (If the number does not match, errors will increase)
Be sure to wire US-1 according to the wiring diagram. If you do not use US-1 according to the wiring diagram, the current transformer (CT) will be open and may cause an accident.
*2 Please note that other combinations cannot be made because the shape of US-1 is different depending on the socket and multiple base to be combined.

■ External connection diagram

Please refer to page D1-78 to D1-80.

The picture is WS2CA - 0 □ 0 type.

■ Type (= Product Code) description

WS2CA– □□ □ □ □ □ Y 1

Input signal

01	0 to 1 AAC
05	0 to 5 AAC
ZZ	Special

Mounting method

0	With rail mounting type socket
1	For multiple base mounting

First output signal

F	0 to 100 mVDC	K	0 to 5 mADC
D	0 to 1 VDC	L	0 to 10 mADC
B	0 to 5 VDC	M	0 to 16 mADC
C	0 to 10 VDC	R	1 to 5 mADC
A	1 to 5 VDC	H	4 to 20 mADC
J	0 to 1 mADC	Z	Special

Second output signal

F	0 to 100 mVDC	L	0 to 10 mADC
D	0 to 1 VDC	M	0 to 16 mADC
B	0 to 5 VDC	R	1 to 5 mADC
A	1 to 5 VDC	H	4 to 20 mADC
J	0 to 1 mADC	Y	None
K	0 to 5 mADC	Z	Special

Design rank

Auxiliary power supply

0	80 to 264 V AC/DC
3	24 VDC (19 to 30 VDC)

■ Manufacturing range

● Input signal
Input current from 0 to (100 mAAC to 6 AAC)

● Output signal
Current output: 0 to (1 mA to 20 mA)DC
Voltage output: 0 to (10 mVDC to 10 VDC)

Except for input currents 1 A and 5 A, it is a special item.

■ Block diagram

● 1 output product

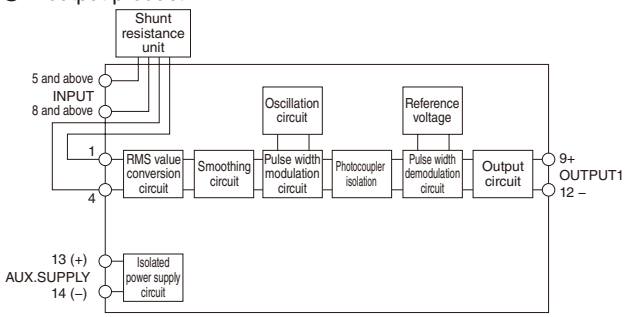

● 2 output product

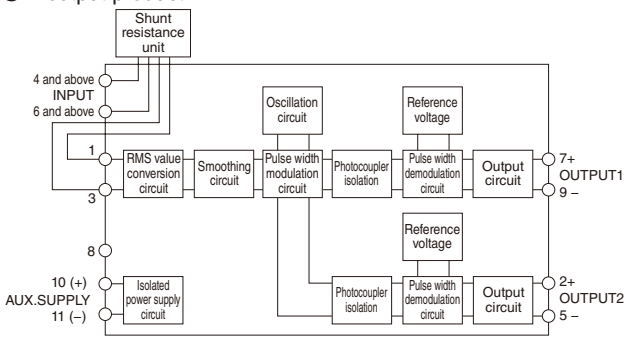

Transducers
AC voltage transducer WS2CV Series

Converts AC voltage in a power system into a DC signal proportional to the input. Since the input and the output are isolated, it can be used for delivering isolated signals between measurement systems, cutting noise, preventing wraparound in control circuits, and direct sending of output signals to distance places, etc.
Up to 16 units can be stored as units in multiple base.

■ Features

- Withstand voltage between input, output, auxiliary power supply and outer case is 2000 VAC (50/60 Hz) for 1 minute isolation.
- Adjustment of zero span is possible. (±2% adjustable)
- Because it is an RMS value calculation method, it can also be used for distorted waveforms and SCR waveforms.
- Power applied status can be checked with the LED.

■ Specifications

Type		WS2CV		
Isolation method		Photocoupler isolation		
Standard precision		± 0.5 %		
Temperature characteristics		0.25 %/10 °C		
Response time		0.25 s or less (0 → 90%)		
Input signal		0 VAC to 300 VAC (0.1 VA)		
First output signal (Load resistance)	Voltage (DC)	1 VDC or less (200 Ω or above)	5 VDC or less (600 Ω or above)	10 VDC or less (2 kΩ or above)
	Current (DC)	1 mADC (10 kΩ or less)	5 mADC or less (2 kΩ or less)	20 mADC or less (750 Ω or less)
Second output signal (Load resistance)	Voltage (DC)	1 VDC or less (200 Ω or above)	5 VDC or less (1 kΩ or above)	
	Current (DC)	1 mADC (7 kΩ or less)	5 mADC or less (1.4 kΩ or less)	20 mADC or less (350 Ω or less)
Adjustment	Zero adjustment range	± 2 %		
	Span adjustment range	Approx. 98 to 102%		
Isolation resistance		50 MΩ or above (500 VDC)		
Withstand voltage	Between input/output/ power supply/outer box	2000 VAC (1 minute)		
	Between the first output and the second output	500 VAC (1 minute)		
Auxiliary power supply	AC	80 to 264 VAC, 50/60 Hz		
	DC	24 VDC, 80 to 264 VDC		
Consumer VA		At 110 VAC At 220 VAC At 24 VDC At 110 VDC	Approx. 4.0 VA Approx. 5.0 VA Approx. 2.5 W Approx. 2.5 W	
Operating temperature/humidity range		-10 to 55°C, 5 to 90% RH (no condensation)		
Mass		No socket: approx. 130 g		

■ Type (= Product Code) description

WS2CV–□□□□□□Y1

Input signal

100	0 to 100 VAC
110	0 to 110 VAC
150	0 to 150 VAC
200	0 to 200 VAC
259	0 to 259 VAC
300	0 to 300 VAC
ZZZ	Special

First output signal

F	0 to 100 mVDC
D	0 to 1 VDC
B	0 to 5 VDC
C	0 to 10 VDC
A	1 to 5 VDC
J	0 to 1 mADC
K	0 to 5 mADC
L	0 to 10 mADC
M	0 to 16 mADC
R	1 to 5 mADC
H	4 to 20 mADC
Z	Special

Second output signal

F	0 to 100 mVDC
D	0 to 1 VDC
B	0 to 5 VDC
A	1 to 5 VDC
J	0 to 1 mADC
K	0 to 5 mADC
L	0 to 10 mADC
M	0 to 16 mADC
R	1 to 5 mADC
H	4 to 20 mDC
Y	None
Z	Special

Auxiliary power supply

0	80 to 264 V AC/DC
3	24 VDC (19 to 30 VDC)

Design rank

■ Manufacturing range

● Input signal
Input voltage from 0 to (10 to 300 VAC)

● Output signal
Current output: 0 to (1 mA to 20 mA)
Voltage output: 0 to (10 mV to 10 V)

For input voltage less than 50 V, it is a special item.

■ External connection diagram

Please refer to page D1-78 to D1-80.

■ Block diagram

● 1 output product

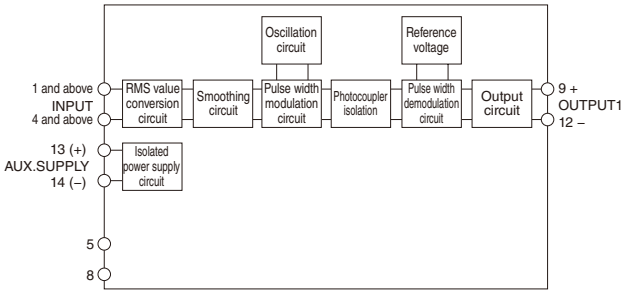

● 2 output product

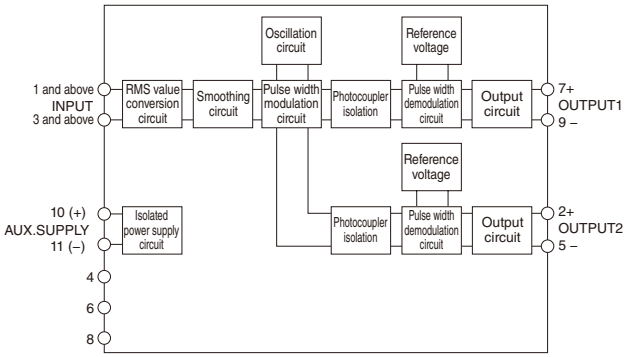

Transducers
Analog signal switch WS2RP Series

It is possible to switch the measurement signal to be monitored by no-voltage contact input or voltage input, for example when monitoring two measuring signals with one monitoring device.

■ Features

- Withstand voltage between input/output signal terminal, auxiliary power supply and outer box is 2000 VAC (50/60 Hz) for 1 minute isolation.
- The withstand voltage of a voltage input type selection signal is isolation at 2000 VAC (50/60 Hz) for 1 minute between selection signal terminal, input/output signal terminal, auxiliary power supply, and outer box.
- When switching the current signal, use a make-before break contact type relay and take measures to open the output terminal. (There may be a minute open time due to the bounce of the relay contacts when switching)
- No voltage contact input and voltage input (24 VDC) can be selected for signal switching.
- Power applied status can be checked with the LED.

■ Specifications

Type		WS2RP
Output signal switching response time	Time to switch from input 1 to 2	5 ms or less (not including contact bounce)
Output signal restoration response time	Time to switch from input 1 to 2	5 ms or less (not including contact bounce)
M - B - B time	Contact short-circuit time at contact switching	10 µs or less
Isolation resistance		50 MΩ or above (500 VDC)
Withstand voltage	Between input/output/power supply/outer box	2000 VAC (1 minute)
Auxiliary power supply		9 to 30 VDC, 80 to 263 VAC/DC
Consumer VA		At 110 VAC Approx. 2.5 VA At 220 VAC Approx. 3.0 VA At 24 VDC Approx. 2.0 W At 110 VDC Approx. 1.5 W
Operating temperature/humidity range		-10 to 55°C, 5 to 90% RH (no condensation)
Mass		No socket: approx. 130 g

■ Contact arrangement

Conditions	Voltage signal switching	Current signal switching
No power supply	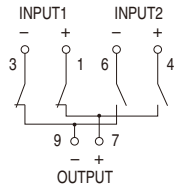	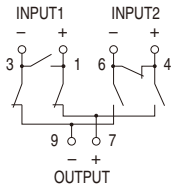
2-5 OFF	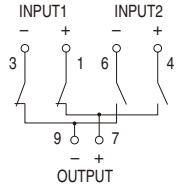	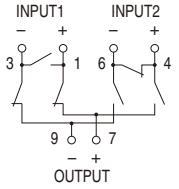
When switching OFF⇔ON	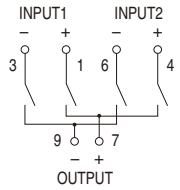	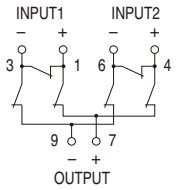
2-5 ON	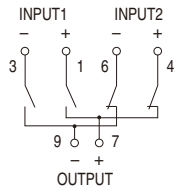	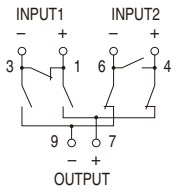

(The numbers in the figure represent the terminal numbers of the optional socket)

■ Type (= Product Code) description

WS2RP– □ Y Y □ Y □ Y 1

Selection signal

1	No-voltage contact input
2	Voltage input

I/O signal

1	4 to 20 mADC
2	1 to 5 VDC
Z	Special

Auxiliary power supply

0	80 to 263 VAC/DC
3	24 VDC (9 to 30 VDC)

Design rank

■ Relay used

Item	Specifications
Contact arrangement	2C
Contact material	Au cladding on Ag
Life expectancy	10 million times or above (switching frequency 180 times/min)
Rated control capacity	1 A 30 VDC
Minimum opening/closing load	10 µA 10 mVDC

■ External connection diagram

Selection signal no-voltage contact input

● Socket (WS212) mounting

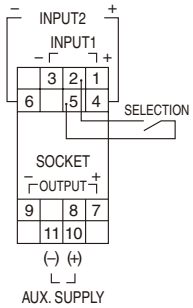

● Multiple base (WS2BA) mounting

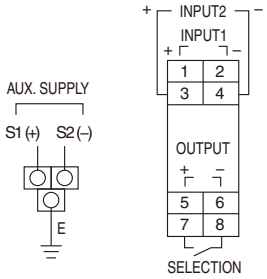

Selection signal voltage input

● Socket (WS212) mounting

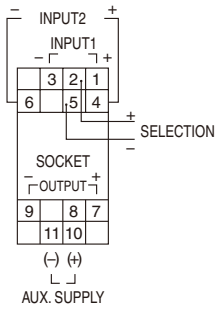

● Multiple base (WS2BA) mounting

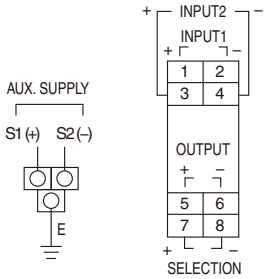

Transducers
Monitor relay (overspeed detector) WS2MR Series

Although it is an overspeed detector with no voltage contact or open collector signal input as a single unit, it can be used as an overspeed detector for sine wave inputs or square wave inputs in combination with a slow pulse (F/V) transducer.

■ Features

- High speed response (response time: single unit 35 ms).
- The withstand voltage between input, output, auxiliary power supply, and outer box is isolation at 2000 VAC (50/60 Hz) for 1 minute.
- The alarm output has two circuits, which are mutually isolated (withstand voltage 500 VAC).
- The alarm output is enabled (ON or OFF) when operation is detected.
- It is possible to change the operation value setting by switch operation on the front panel (trip mode).
  Setting range: 105.0 to 120.0%, 0.1% steps
- The device has a test function (backup lockout function).
  Setting range: 90.0 to 120.0%, 0.1% steps
- Setting values can be digitally displayed.
- The detection status is displayed by the monitor lamp.

■ Specifications

Type		WS2MR
Input type		No-voltage contact, open collector
Output contact capacity		125 VAC/DC 70 mA
Setting accuracy	% of rated frequency	± 0.5 %
Response time	Response time of 90 to 110% of setting value	35 ms or less
Hysteresis width	% of rated frequency	3 to 10%
Influence of self heating	% of rated frequency	0.50 %
Influence of temperature	% of rated frequency (Versus standard temperature 23°C)	0.2 %/10 °C
Influence of auxiliary power supply voltage	% of rated frequency	0.25 %
Isolation resistance		50 MΩ or above (500 VDC)
Withstand voltage	Between input/output/power supply/outer box	2000 VAC (1 minute)
	Alarm 1 output/alarm 2 output	500 VAC (1 minute)
Auxiliary power supply		24 VDC±10%
Consumer VA		Approx. 2.5 W at 24 VDC
Operating temperature/humidity range		-10 to 55°C, 5 to 90% RH (no condensation)
Mass		No socket: approx. 130 g

■ Display/settings

Item	Specifications
Setting value variable range	105.0 to 120.0%
Setting value resolution	0.10 %
Setting method	Set with front switch
Setting value display	Dot Matrix LED 4 digits Green Text height 3.7 mm (However, the setting value display dims one minute after the last switch operation. The decimal point is on the nameplate display.)
Save setting value	Setting values are saved in nonvolatile memory (At shipment, trip mode: 110%, backup lockout mode: 99%)
Monitor lamp (AL)	Lights up when detected, and turns off when there is no detection (red LED)
Backup lockout function	By using the backup lockout function, detection operation can be performed by changing the settings while maintaining the setting value during actual operation. By short-circuiting the BACK UP LOCK OUT terminal, the device switches to settings/operation of the backup lockout mode, and the front TEST LED (green) lights up. When it is canceled, it returns to the settings/operation before the short-circuit, and the TEST LED also turns off. In the backup lockout mode, a setting range of 90.0 to 120.0% on the front is possible, and it is possible to check the detection operation even with input within the rated range. The BACK UP LOCK OUT input has a confirmation timer of 100 ms for detecting the input state. Switching between trip mode ← → backup lockout mode is 100 ms after input change.

■ Type (= Product Code) description

WS2MR– 2 □ Y □ □ 3 Y 1

Input frequency

N	0 to 1.000 kHz
O	0 to 2.000 kHz
P	0 to 3.000 kHz
Q	0 to 4.000 kHz
R	0 to 5.000 kHz
S	0 to 6.000 kHz
T	0 to 7.000 kHz
U	0 to 8.000 kHz
V	0 to 9.000 kHz
W	0 to 10.000 kHz
Z	Special

Alarm output 1

1	Contact ON at detection
2	Contact OFF at detection

Alarm output 2

1	Contact ON at detection
2	Contact OFF at detection

Auxiliary power supply 24 VDC

Design rank

■ External connection diagram

● Socket (WS212) mounting ● Multiple base (WS2BA) mounting

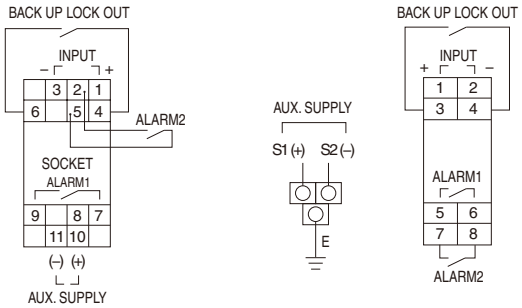

■ Block diagram

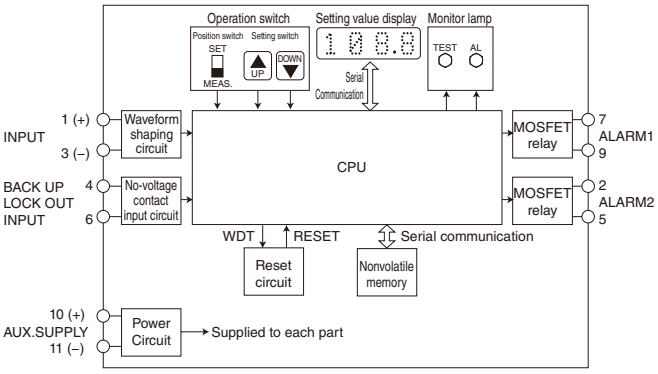

(The numbers in the figure represent the terminal numbers of the socket)

Analog constant signal output device (manual setter) WS2MS Series

It is an isolated 2-output type manual setter with a small plug-in structure which outputs an arbitrary analog constant signal according to the settings of the front switch.

■ Features

- Withstand voltage between output, auxiliary power supply and outer box is isolation for 1 minute at 2000 VAC (50/60 Hz).
- The analog output has two circuits, which are mutually isolated (withstand voltage 500 VAC). Voltage output and current output can be specified.
- Output signal settings can be changed by switch operation on the front.
  (In the range of -10.0 to 110.0%, 0.1% steps)
- Setting values can be digitally displayed.

■ Specifications

Type		WS2MS
Setting precision	% of output span	± 0.1 %
Output ripple	% of output span	1 %P-P
Influence of load resistance	% of output span	0.1 %
Influence of self heating	% of output span	0.25 %
Influence of temperature	% of output span (Versus standard temperature 23°C)	0.2 %/10 °C
Influence of auxiliary power supply voltage	% of output span	0.1 %
Isolation resistance		50 MΩ or above (500 VDC)
Withstand voltage	Between input/output/power supply/ outer box	2000 VAC (1 minute)
	Between the first output and the second output	500 VAC (1 minute)
Auxiliary power supply		24 VDC±10%
Consumer VA		Approx. 4.5 W at 24 VDC
Operating temperature/humidity range		-10 to 55°C, 5 to 90% RH (no condensation)
Mass		No socket: approx. 130 g

■ Display/settings

Item	Specifications
Setting value variable range	-10.0 to +110.0% Example) -10% = -12 V, 0% = -10 V, +100% = +10 V, +110% = +12 V at output ±10 V
Setting value resolution	0.1 %
Setting method	Set with front switch
Setting value display	Dot Matrix LED 4 digits Green Text height 3.7 mm (However, the setting value display dims one minute after the last switch operation. The decimal point is on the nameplate display.)
Save setting value	When the polarity is negative, "-" is displayed.
Polarity value display	Setting values are saved in nonvolatile memory (factory default, 0.0%)

■ External connection diagram

● Socket (WS212) mounting ● Multiple base (WS2BA) mounting

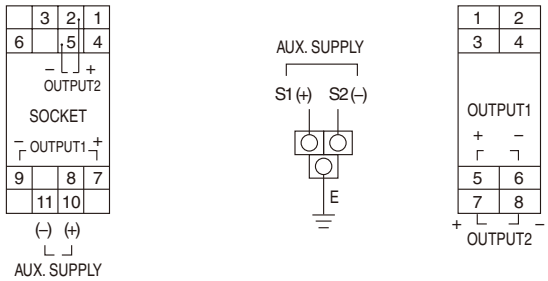

■ Type (= Product Code) description

WS2MS– Y Y Y □ □ 3 Y 1

- Design rank
- Auxiliary power supply 24 VDC
- First output signal
- Second output signal

First output signal

D	0 to 1 VDC
B	0 to 5 VDC
C	0 to 10 VDC
A	1 to 5 VDC
S	±5 VDC
E	±10 VDC
J	0 to 1 mADC
K	0 to 5 mADC
L	0 to 10 mADC
M	0 to 16 mADC
R	1 to 5 mADC
H	4 to 20 mADC
Z	Special

Second output signal

D	0 to 1 VDC
B	0 to 5 VDC
C	0 to 10 VDC
A	1 to 5 VDC
S	±5 VDC
E	±10 VDC
J	0 to 1 mADC
K	0 to 5 mADC
L	0 to 10 mADC
M	0 to 16 mADC
R	1 to 5 mADC
H	4 to 20 mADC
Y	None
Z	Special

■ Block diagram

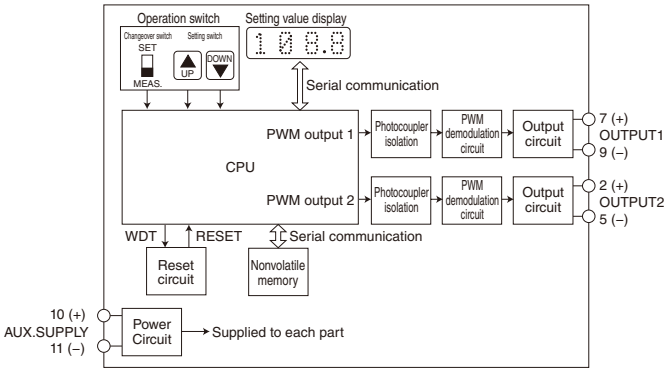

D1

Transducers
Zero speed detector for pulse input WS2ZL Series

A zero speed detector for pulse input that detects the rotational speed of a generator and performs contact output.
When the rotational speed of the generator falls below the setting value, the output contact operates and the front monitor lamp "L" lights up.

■ Features

- The withstand voltage between input, output, auxiliary power supply and outer box is isolation for 1 minute at 2000 VAC (50/60 Hz).
- When the input voltage drops below 3 V, the output is in the detection state irrespective of the input.
- Power applied status can be checked with the LED.

■ Specifications

Type		WS2ZL
Input signal	Input voltage	By designation (see formulation section)
	Input voltage level	LO: 3 V or less, Hi: 8 V or above
	Input frequency	0 to 10 kHz
	Input filter	Filter time constant 12 μs
	Input impedance	7 kΩ
Output signal	Output contact capacity	125 VAC/DC 70 mA
Monitor output		5 V_{p-p} pulse output (Pulse cycle can be adjusted by switch switching)
Precision	Pulse period	± 5 %
Influence of temperature	Versus standard temperature 23°C	5% at ±10°C 20% at the upper and lower limits of the temperature range
Influence of auxiliary power supply voltage		1.0 %
Isolation resistance		50 MΩ or above (500 VDC)
Withstand voltage	Between input/output/power supply/outer box	2000 VAC (1 minute)
Auxiliary power supply		24 VDC±10%
Consumer VA		Approx. 1.5 W at 24 VDC
Operating temperature/humidity range		-10 to 55°C, 5 to 90% RH (no condensation)
Mass		No socket: approx. 130 g

■ External connection diagram

● Socket (WS212) mounting

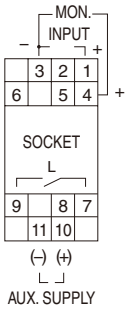

● Multiple base (WS2BA) mounting

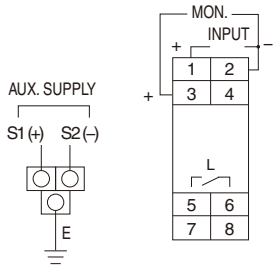

■ Block diagram

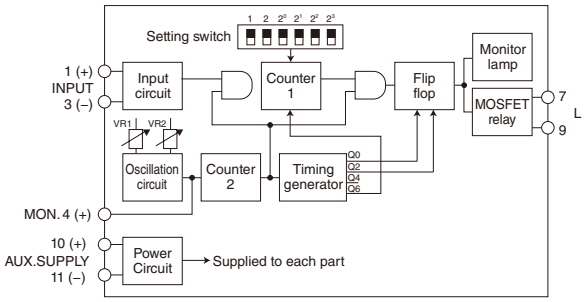

■ Type (= Product Code) description

WS2ZL– W □ Y □ Y 3 Y 1

- Design rank
- Auxiliary power supply 24 VDC
- Contact movement
- Input voltage/ pulse setting range

A	15V_{p-p} , 1 to 15 pulse
B	15V_{p-p} , 16 to 86 pulse
Z	Special

1	Contact point ON at set value or less
2	Contact point OFF set value or less

■ Setting (example of input pulse 1 to 15 pulse product)

Item	Specifications							
Internal oscillation adjustment	SW1:ON	Pulse period with VR1 Adjustment						
		Variable range 0.43 to 0.66 s						
Fast-forward mode adjustment	SW2:ON	Pulse period with VR2 Adjustment						
		Variable range 16 to 23 ms						
Detection Setting switch: 2^0 to 2^3	Input pulse (P)	Preset (1: ON, 0: OFF)				Detected rotational speed (N)		
		SW:2^3	SW:2^2	SW:2^1	SW:2^0	Decimal	Number of teeth 60 (T)	Number of teeth 120 (T)
The rotational speed is measured from the number of pulses input for 4 seconds, and L is detected at less than the detected rotational speed. Relationship between the detected rotational speed (N) and the input pulse (P) for the number of teeth (T) P = N×T×4(s) /60(s)	–	1	1	1	1	15	–	–
	1	1	1	1	0	14	Less than 0.250 rpm	Less than 0.125 rpm
	2	1	1	0	1	13	Less than 0.500 rpm	Less than 0.250 rpm
	3	1	1	0	0	12	Less than 0.750 rpm	Less than 0.375 rpm
	4	1	0	1	1	11	Less than 1.000 rpm	Less than 0.500 rpm
	5	1	0	1	0	10	Less than 1.250 rpm	Less than 0.625 rpm
	6	1	0	0	1	9	Less than 1.500 rpm	Less than 0.750 rpm
	7	1	0	0	0	8	Less than 1.750 rpm	Less than 0.875 rpm
	8	0	1	1	1	7	Less than 2.000 rpm	Less than 1.000 rpm
	9	0	1	1	0	6	Less than 2.250 rpm	Less than 1.125 rpm
	10	0	1	0	1	5	Less than 2.500 rpm	Less than 1.250 rpm
	11	0	1	0	0	4	Less than 2.750 rpm	Less than 1.375 rpm
	12	0	0	1	1	3	Less than 3.000 rpm	Less than 1.500 rpm
	13	0	0	1	0	2	Less than 3.250 rpm	Less than 1.625 rpm
	14	0	0	0	1	1	Less than 3.500 rpm	Less than 1.750 rpm
	15	0	0	0	0	0	Less than 3.750 rpm	Less than 1.875 rpm
Monitor lamp L	Lights up when detected, and turns off when there is no detection (red LED)							

Zero speed detector for sine wave input WS2ZA Series

A zero speed detector for sine wave input that detects the rotational speed of a generator and performs contact output.
When the rotational speed of the generator falls to PICK UP (operation value), the first output contact (L detection output) operates and the display LED on the "L" side of the front nameplate lights up (red).
Also, when the frequency difference between the first input and the second input is more than 20% of the rated frequency, the second output contact (deviation output) operates and the display LED on the "DV" side of the front nameplate lights up (red).

■ Features

- Withstand voltage between input, output, auxiliary power supply, and outer box is isolation for 1 minute at 2000 VAC (50/60 Hz).
- Withstand voltage of first output (L) and second output (DV) is isolation for 1 minute at 500 VAC (50/60 Hz).
- Since there is a cut-off voltage, when the input voltage falls below the cut-off voltage, the first output will be in the detected output state regardless of the input frequency. (Except below the minimum input voltage of 1 V)
- Power applied status can be checked with the LED.

■ Specifications

Type			WS2ZA	
Input signal	Input voltage		Generator output voltage	
	Input voltage level		Apply the same voltage to the first and second input terminals	
	Input frequency		Apply the same rotational speed to the first and second input terminals	
Output signal	Output contact capacity	First output	125 VAC/DC 70 mA, On resistance: 35 ΩMAX	
		Second output	125 VAC/DC 70 mA, On resistance: 16 ΩMAX	
Setting precision	First output		Operating value within normal operating voltage range	± 5 %
			Return value within normal operating voltage range	± 10 %
	Second output		Deviation: Frequency difference between input 1 and input 2 (fixed at 20%)	± 10 %
			Hysteresis width: The width of the frequency from deviation detection to return	0.833 to 5%
Influence of temperature Versus standard temperature 23°C		First output	At ±10°C	0.5 %
		Second output	At ±10°C	1.5 %
Influence of auxiliary power supply voltage		First output	With 24 VDC±10% fluctuation	0.5 %
		Second output	With 24 VDC±10% fluctuation	1.5 %
Response time	Both the first and second outputs		1.5 s or less	
Isolation resistance			50 MΩ or above (500 VDC)	
Withstand voltage	Between input/output/ power supply/outer box		2000 VAC (1 minute)	
	Between output terminals		500 VAC (1 minute)	
Auxiliary power supply			24 VDC±10%	
Consumer VA			Approx. 2.5 W at 24 VDC	
Operating temperature/humidity range			-10 to 55°C (no condensation)	
Mass			No socket: approx. 180 g	

■ Display operation

Item	Conditions	
Display	Detection: L	When the auxiliary power is OFF: Light is OFF, when not detected: Light is OFF, When detected: Light is ON (red)
	Deviation: DV	When the auxiliary power is OFF: Light is OFF, when not detected: Light is OFF, When detected: Light is ON (red)

■ Block diagram

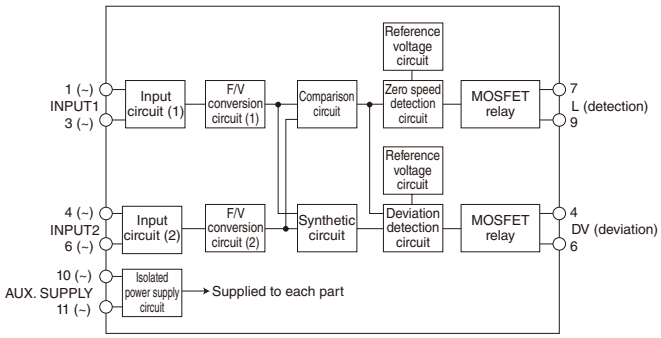

■ Type (= Product Code) description

WS2ZA–□□□□1 3 Y 1

Input frequency

C	0 to 50 Hz
E	0 to 60 Hz
H	0 to 100 Hz
M	0 to 500 Hz
N	0 to 1 kHz
Z	Special

Normal operating voltage range

1	1 to 25 V
2	2 to 50 V
3	5 to 110 V
4	10 to 220 V
5	10 to 300 mV
Z	Special

Operating value

1	10 Hz
2	20 Hz
3	30 Hz
4	40 Hz
5	50 Hz
Z	Special

First output

1	Contact ON at frequency detection
2	Contact OFF at frequency detection

Auxiliary power supply 24 VDC

Design rank

■ External connection diagram

● Socket at 2 inputs (WS 212)

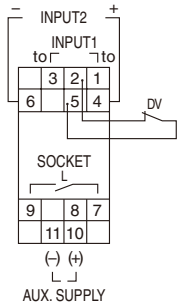

● Multiple base at 2 inputs (WS2BA)

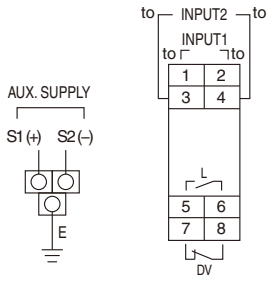

● Socket at 1 input (WS212)

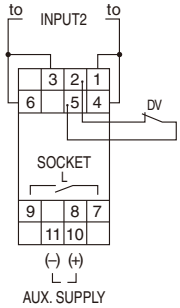

● Multiple base at 1 input (WS2BA)

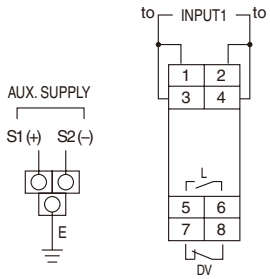

Transducers
Slow pulse (F/V) transducer WS2SP Series

Two-output type F/V converter with compact plug-in structure that takes a sinusoidal voltage or rotational speed pulse as its input, converts the frequency to an arbitrary analog signal and outputs it, and open collector outputs pulses with the same frequency as that frequency. Please combine it with the overspeed detector (WS2MR) for overspeed detection in steam turbines and gas turbines.

■ Features

- Sine wave or rectangular wave can be specified as the input.
- Overspeed detection has a fast response (40 ms or less in combination with overspeed detector WS2MR).
- The withstand voltage between input, output, auxiliary power supply, and outer box is isolation for 1 minute at 2000 VAC (50/60 Hz).
- Analog output and open collector output are isolated from each other. Withstand voltage 500 VAC (50/60 Hz) 1 minute isolation.
- Power applied status can be checked with the LED.

■ Specifications

Type		WS2SP		
Isolation method		Photocoupler isolation		
Standard precision		± 0.2 %		
Temperature characteristics		0.2 %/10 ºC		
Response time		0.5 s or less/0 → 90%		
First output signal (Load resistance)	Voltage (DC)	1 VDC or less (200 Ω or above)	5 VDC or less (600 Ω or above)	10 VDC or less (2 kΩ or above)
	Current (DC)	1 mADC (10 kΩ or less)	5 mADC or less (2 kΩ or less)	20 mADC or less (750 Ω or less)
Second output signal	Open Collector	30 V, 100 mA (When combining with WS2MR, load characteristic of 12 V, 10 mA)		
Isolation resistance		50 MΩ or above (500 VDC)		
With-stand voltage	Between input/output/ power supply/outer box	2000 VAC (1 minute)		
	Between output terminals	500 VAC (1 minute)		
Auxiliary power supply		24 VDC±10%		
Consumer VA		Approx. 2.5 W at 24 VDC		
Operating temperature/humidity range		-10 to 55°C (no condensation)		
Mass		No socket: approx. 180 g		

* The lower limit of the input frequency can be manufactured from 400 Hz.

■ External connection diagram

● Socket (WS212) mounting ● Multiple base (WS2BA) mounting

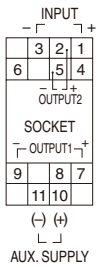

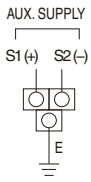

■ Type (= Product Code) description

WS2SP–□□□□ 1 3 Y 1

Input type

1	Sine wave input
A	Pulse input

Input frequency

N	0 to 1.00 kHz
O	0 to 2.00 kHz
P	0 to 3.00 kHz
Q	0 to 4.00 kHz
R	0 to 5.00 kHz
S	0 to 6.00 kHz
T	0 to 7.00 kHz
U	0 to 8.00 kHz
V	0 to 9.00 kHz
W	0 to 10.00 kHz
Z	Special

Normal operating voltage range

1	0.5 to 15 V
2	1 to 25 V
3	2 to 50 V
A	$5V_{p-p}$
B	$10V_{p-p}$
C	$12V_{p-p}$
D	$15V_{p-p}$
E	$24V_{p-p}$
Z	Special

Design rank

Auxiliary power supply 24 VDC

First output

D	0 to 1 VDC	K	0 to 5 mADC
B	0 to 5 VDC	L	0 to 10 mADC
C	0 to 10 VDC	M	0 to 16 mADC
A	1 to 5 VDC	R	1 to 5 mADC
S	±5 VDC	H	4 to 20 mADC
E	±10 VDC	Z	Special
J	0 to 1 mADC		

■ Block diagram

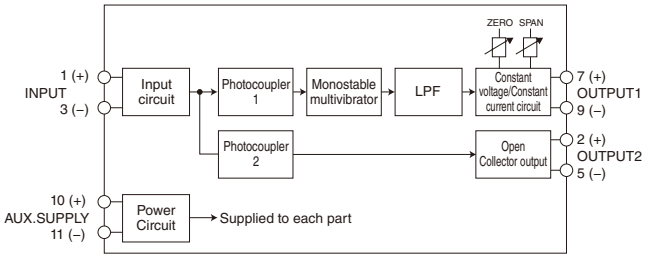

Fuji Electric FA Components & Systems Co., Ltd.
Information subject to change without notice

An alarm setter that allows you to select socket mounting plug-in type and multiple base (WS2BA Series) mounting.
Up to 4 alarms can be output.

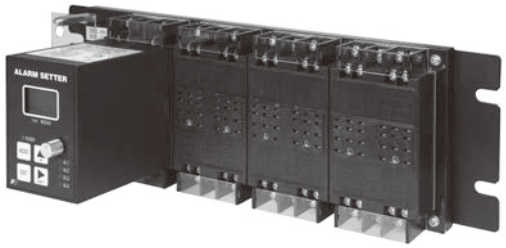

The picture shows the WS2AS mounted on multiple base (sold separately).

■ Features

- 5 types of alarm output contact can be selected.
  2 outputs (independent 1c contact), 3 outputs (independent 1a contact or independent 1b contact)
  4 outputs (1a contact with 2 points in common on one side, or 1b contact with 2 points in common on one side)
- Operation setting value and measurement value can be displayed in actual scale (scaling).
- Maximum value/minimum value display, startup delay, and contact delay function are provided as standard.
- Upper limit and lower limit detection can be individually set for operation value settings.
- Operation setting value can be set from -25% to 125% of input. For input of 4 to 20 mADC, it can be used for disconnection detection by setting less than 0% as the lower limit detection.
- Operation value setting can be set for both the upper limit and the lower limit.
- Using the pre-alarm function, the operation status of the contact delay timer is understood and the test efficiency is improved.
- Power applied status can be checked with the LED.

■ Type (= Product Code) description

Type name Specification code

WS2AS – □□ □ □ Y □ Y 1

Input signal

33	0 to 60 mVDC	24	±10 VDC
12	0 to 1 VDC	27	0 to 1 mADC
13	0 to 5 VDC	54	0 to 5 mADC
14	0 to 10 VDC	55	0 to 10 mADC
15	1 to 5 VDC	56	0 to 16 mADC
51	±60 mVDC	16	4 to 20 mADC
53	±1 VDC	ZZ	Special
42	±5 VDC		

Mounting method

0	With rail mounting type socket
1	For multiple base mounting

Output contact arrangement

1	Alarm output 2 points (C contact)
2	Alarm output 3 points (a contact)
3	Alarm output 3 points (b contact)
4	Alarm output 4 points (a contact)
5	Alarm output 4 points (b contact)
Z	Special

Auxiliary power supply

0	80 to 264 V AC/DC
3	24 VDC (19 to 30 VDC)

■ Manufacturing range

(1) Input manufacturing range and accuracy

Input type	Manufacturing range	Accuracy (% versus input span)
Voltage input	60 mVDC to less than 1 VDC	± 0.2 %
	±60 mVDC to less than ±1 VDC	
	1 VDC to 60 VDC	± 0.1 %
	±1 VDC to ±60 VDC	
Current input	1 mADC to 50 mADC	± 0.1 %
	±1 mADC to ±50 mADC	

(2) Manufacturing range of output contact arrangement

For alarm output 3 points and 4 points, it is possible to individually specify a contact or b contact for alarm output.

Example) Alarm output 3 points
ALARM1: a contact
ALARM2: a contact
ALARM3: b contact

■ Block diagram

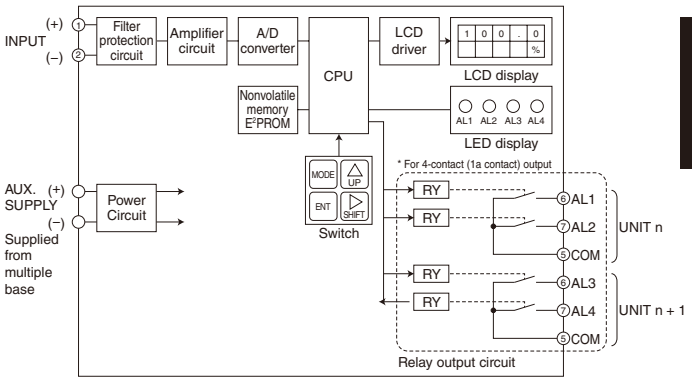

■ Precision resistance unit UR-2 (sold separately)

Use UR-2 in combination with a voltage input alarm setter. When replacing the alarm setter in live state at the time of current input, when open measures are necessary, connect UR-2 to the terminals and convert it to a voltage signal before use.

● UR-2 resistance values 10 Ω, 50 Ω, 100 Ω, 62.5 Ω, 250 Ω, 500 Ω, 1 kΩ
Please specify from the above.

■ Multiple base for installation WS2BA (sold separately)

Refer to page D1-78.

■ External connection diagram

Refer to page D1-77.

Transducers
Alarm setter WS2AS Series

■ Specifications/performance

Item		Specifications		
Number of output points		2 points, 3 points, 4 points Specify upon order		
Contact arrangement		2 points: Each 1c contact 3 points: each 1a contact or 1b contact 4 points: each 1a contact (2 points common on one side) or 1b contact (2 points common on one side)		
Contact capacity		Maximum opening/closing load	120 VAC 1 A (COS ϕ =1), 30 VDC 1 A (resistance load)	
		Minimum opening/closing load	5 VDC 10 mA	
Electrical life expectancy		500,000 times or above (switching frequency 30 times/min)		
Output mode		Detection operation can be set to the following five modes (1) Upper limit setting (H), detection operation: relay excitation (2) Upper limit setting (H), detection operation: relay non-excitation (3) Lower limit setting (L), detection operation: relay excitation (4) Lower limit setting (L), detection operation: relay non-excitation (5) OFF, relay always non-excitation		
Relay excitation status display		At the maximum of 4 contacts, relay excitation monitor lamp on, pre-alarm setting on, blinking during delay time		
Relay and monitor lamp operation		When the control power supply is OFF, or when the relay is not energized	Relay b contact ON, monitor lamp OFF	
		When relay is energized	Relay a contact ON, monitor lamp ON	
Setting accuracy (2)		±0.1% (% versus input span)		
Display accuracy (3)		±0.1% (% versus input span) ±1 digit When the scaling span is 1,000 or above (5 digits except the decimal point), ±0.1% (versus input span) ±2 digits. When the scaling span is 10,000 or above, and the input is less than 1 V, ±0.2% (versus input span) ±2 digits.		
Reproducibility of operating point		±0.1% (% versus input span)		
Response time (1)		±0.25 s of setting value (however, in the case of setting value = 0 s, 0.5 ±0.25 s) The setting value is the contact delay time		
Recovery time (1)		0.5 s or less		
Start time delay time		±0.25 s of setting value		
Influence of temperature		0.2% (versus input span)/23±10°C		
Influence of power supply voltage fluctuation		0.1% (versus input span)/within variable range		
Calculation period		Approx. 0.1 s		
Response time (1)		Approx. 0.5 s When CD=0 s, when a step change of 90% to 110% of the operation value setting is applied		
Overload capacity	Voltage input	Twice the rated voltage for 10 s, 1.5 times continuous		
	Current input	10 times the rated voltage for 5 s, 1.5 times continuous		
	Control power supply	1.5 times the rated voltage for 10 seconds, variable range upper limit continuous		
Isolation resistance		Between electric circuit package and outer box		50 M Ω or above with 500 VDC mega [When 4 contact output is selected, between AL1 and AL2, and between AL3 and AL4 are not isolated.]
		Between input/output terminal and control power terminal		
		Between input terminal and output terminal		
		Between output terminals	2 contacts	Between AL1 and AL2
			3 contacts	Between AL1, AL2, AL3
			4 contacts	Between AL1/AL2 and AL3/AL4
Power frequency withstand voltage		Between electric circuit package and outer box		2000 VAC (50/60 Hz) 1 minute No abnormality
		Between input/output terminal and control power terminal		
		Between input terminal and output terminal		
		Between output terminals	2 contacts	Between AL1 and AL2
			3 contacts	Between AL1 and AL2	1000 VAC (50/60 Hz) 1 minute No abnormality
				Between AL1/AL2 and AL3	2000 VAC (50/60 Hz) 1 minute No abnormality
			4 contacts	Between AL1/AL2 and AL3/AL4	[When 4 contact output is selected, between AL1 and AL2, and between AL3 and AL4 are not isolated.]
Lightning impulse withstand voltage		Between electric circuit package and outer box		5 kV 1.2/50 μs positive/negative polarity No abnormality when applied 3 times each
Vibration		When vibration of 16.7 Hz, double amplitude 1 mm is applied in the X, Y, Z directions for 10 minutes each, there shall be no malfunction.		
Impact		Misoperation: Impact of size of 98 m/s^2 applied in X, Y, Z directions 3 times in forward and reverse Durability: Impact of size of 294 m/s^2 applied in X, Y, Z directions 3 times in forward and reverse		
Power outage guarantee		Setting values are saved in nonvolatile memory		
Material of outer box		Case: Flame retardant ABS resin, Display nameplate: Polyester film		
Appearance color		Munsell N 1.5 (black)		
Operating temperature and humidity range		-10 to +55°C, 5 to 90% RH (no condensation)		
Storage temperature range		–25 to +70°C		
Mass		Approx. 180 g		
Accessories		Unit stickers, instruction manual		

Note (1) When the average number is one time. For average number 4, 8, 16, 32, response time and return time differ depending on the conditions.
Note (2) ±0.2% (versus input span) when the input is 60 mVDC to less than 1 VDC, or ±60 mVDC to less than ±1 VDC.
Note (3) ±0.2% (versus input span) ±1 digit when the input is 60 mVDC to less than 1 VDC, or ±60 mVDC to less than ±1 VDC.

■ Initial setting values

Item	Setting range	Factory setting (can be changed on request)			
Measurement display	–9999 to 9999, -9.99 to 99.99 –99.9 to 999.9, 0.000 to 9.999	0.0 to 100.0			
Unit display	%, m, °C, m^3/h, ppm, pH, Tpm, ×10 kg, Ω, kW For other than the above, please use the attached unit stickers.	%			
Operating value	Input -25 to +125% Setting example Input rating 4 to 20 mA Operation value is less than 0%, output mode Low setting L is detected when the input is less than 4 mA, and it can be used for disconnection detection 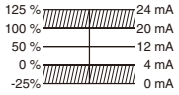		2 contacts	3 contacts	4 contacts
		AL1	70.0 %	80.0 %	80.0 %
		AL2	30.0 %	70.0 %	70.0 %
		AL3	-	30.0 %	30.0 %
		AL4	-	-	20.0 %
Dead band	0.5 to 50.0%	AL1 to AL4: 3.0%			
Output mode	H,L,OFF Excitation, non-excitation	AL1	H, excitation	H, excitation	H, excitation
		AL2	L, excitation	H, excitation	H, excitation
		AL3	-	L, excitation	L, excitation
		AL4	-	-	L, excitation
Contact delay time (CD)	0 to 180 s	AL1 to AL4: 0 s			
Start time delay time (SD)	1 to 180 s	5s			
Calibration	Bias: -9.99 to +9.99% Span: -9.99 to +9.99%	Bias: 0.00% Span: 0.00%			
Average number	1, 4, 8, 16, 32	1			
Pre-alarm	ON: With pre-alarm OFF: No pre-alarm	OFF			

■ External dimensions [unit: mm]

For multiple base attachment

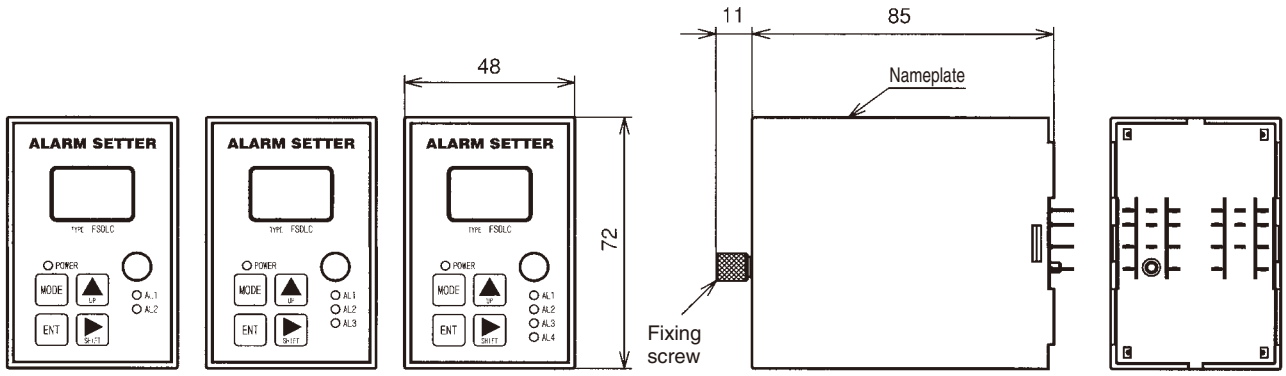

For 2 contact For 3 contact For 4 contact

With rail mounting type socket

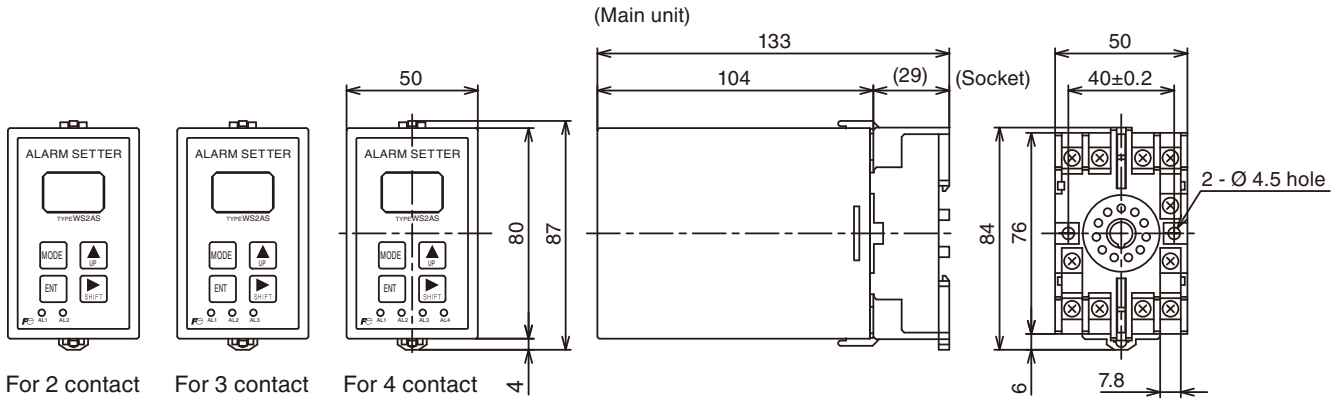

For 2 contact For 3 contact For 4 contact

■ External connection diagram

2 contacts: each 1c contact

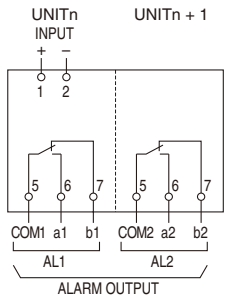

3 contacts: each 1a contact

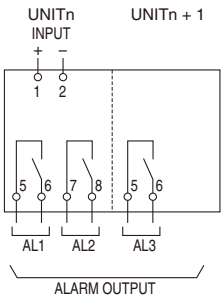

3 contacts: each 1b contact

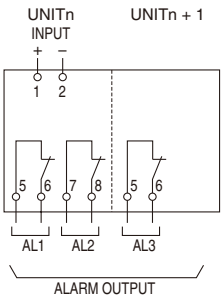

4 contacts: each 1a contact

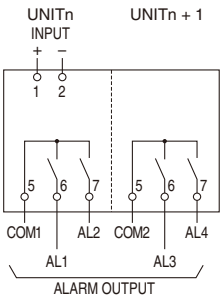

4 contacts: each 1b contact

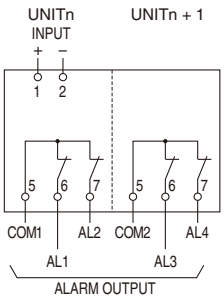

Note: Since it differs from what is indicated on multiple base WS2BA, please refer to above connection diagram.

With rail mounting type socket

2 contacts: each 1c contact

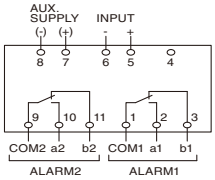

3 contacts: each 1a contact

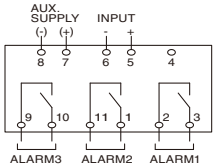

3 contacts: each 1b contact

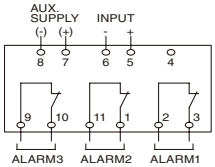

4 contacts: each 1a contact

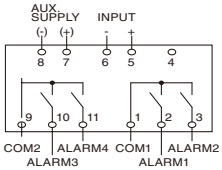

4 contacts: each 1b contact

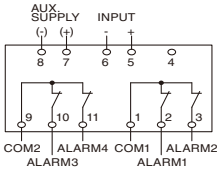

Socket terminal layout diagram

Transducers
Connection diagram

■ Input/output terminal configuration

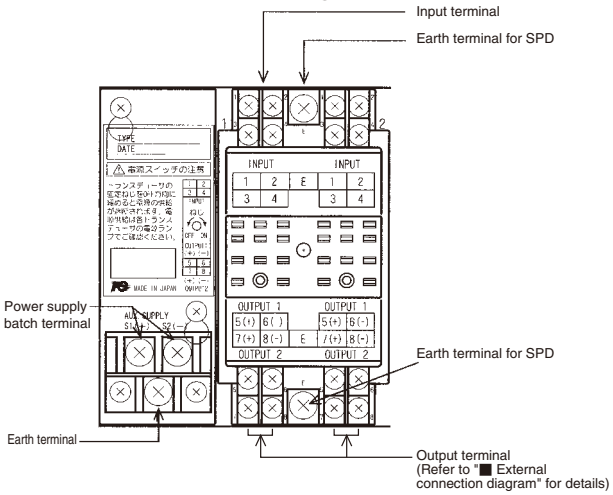

CAUTION
WS2AS uses one unit of the 2 mounting units of multiple base (WS2BA Series).

■ Auxiliary power supply terminal

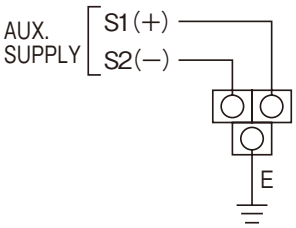

CAUTION
Please be sure to unify the auxiliary power supply specification of the unit to be mounted on the multiple base.

■ Multiple base accessories/optional mounting drawing (unit: mm)

● WS2BA-08 reference drawing

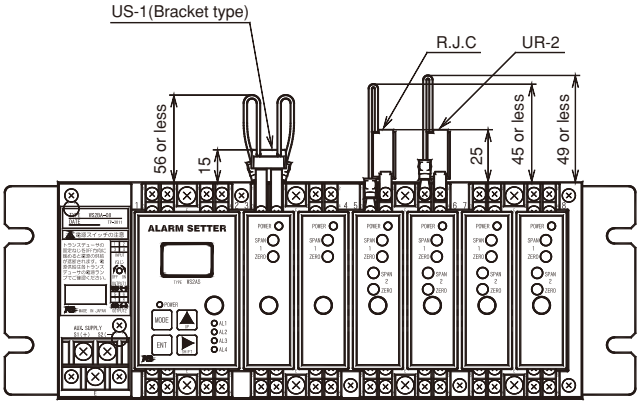

US-1 : Shunt resistance unit for AC current transducer (WS2CA) (accessory)
RJC : Cold contact compensation sensor (accessory) for thermocouple transducer (WS2TC)
UR-2 : Isolator, high speed isolator (Precision resistance unit for WS2DC, HS, US (sold separately))

■ Connection diagram of individual units when multiple base is used

● Distributor
Type WS2DY

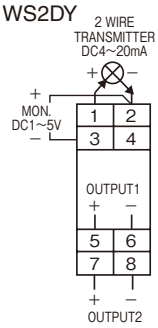

● DC isolation transducer
Tacho-Genetransducer
Type WS2DC
WS2HS
WS2US
WS2TG

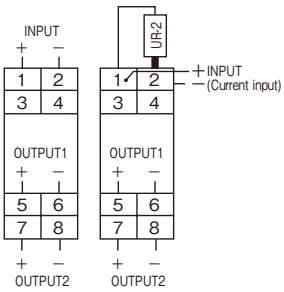

● AC voltage transducer
Type WS2CV

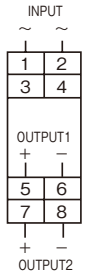

● AC current transducer
Type WS2CA

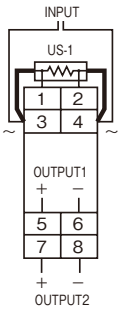

● Thermocouple transducer
Type WS2TC

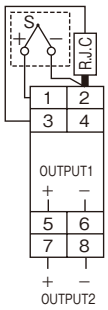

● Resistance temperature sensor transducer
Type WS2PT

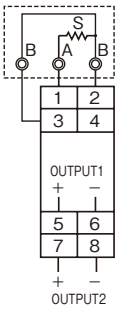

● Potentiometer transducer
Type WS2PM

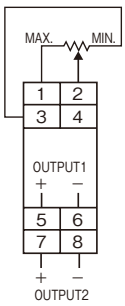

■ External drawing/mounting diagram for rail mounting type socket 1 output (unit: mm)

Transducer main unit

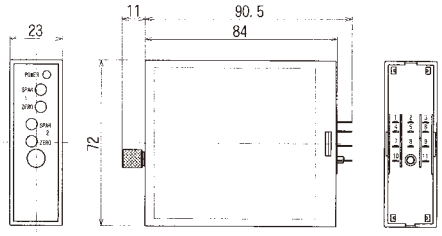

Socket (WS211)

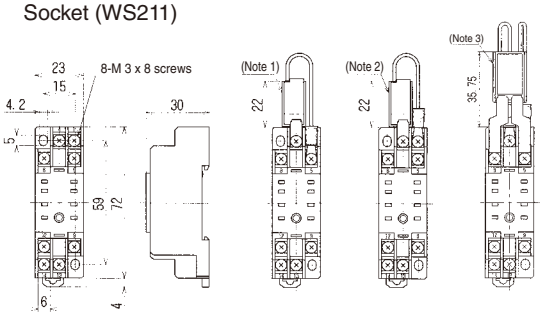

(Note 1) R.J.C unit for thermoelectric temperature transducer (accessory)
(Note 2) Isolator, high speed isolator precision resistance unit for current input UR-2 (sold separately)
(Note 3) Shunt resistance unit US-1 for AC current transducer (accessory)
Please keep clearance of 2 mm or above between WS211.

■ External connection diagram (1 output type)

● DC isolation transducer
Tacho-Genetransducer
Type WS2DC
WS2HS
WS2US
WS2TG

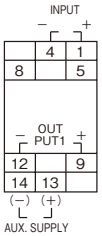

● AC voltage transducer
Type WS2CV

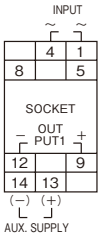

● AC current transducer
Type WS2CA

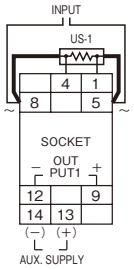

● Thermocouple transducer
Type WS2TC

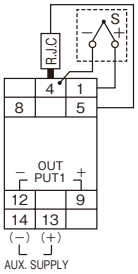

● Temperature measuring resistor transducer
Type WS2PT

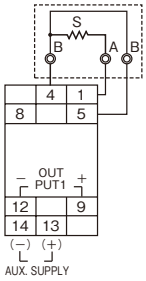

● Potentiometer transducer
Type WS2PM

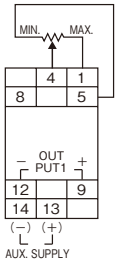

● Distributor
Type WS2DY

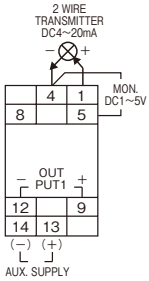

■ External drawing/mounting diagram for rail mounting type socket 2 output (unit: mm)

Transducer main unit

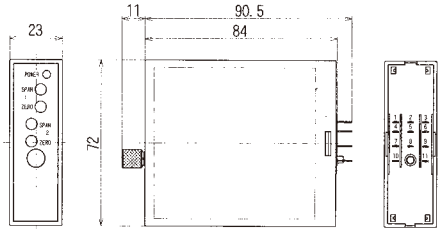

Socket (WS212)

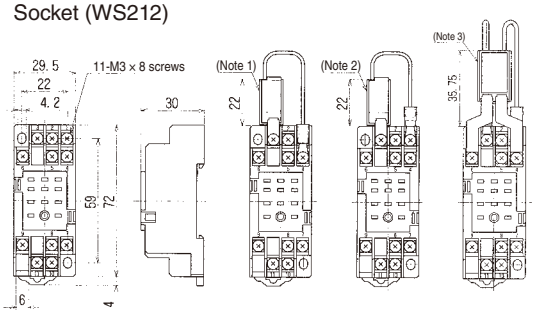

(Note 1) R.J.C unit for thermoelectric temperature transducer (accessory)
(Note 2) Isolator, high speed isolator precision resistance unit for current input UR-2 (sold separately)
(Note 3) Shunt resistance unit for AC current transducer US-1 (accessory)

Transducers
Connection diagram

■ External connection diagram (2 output type)

● DC isolation transducer
Tacho-Genetransducer
Type WS2DC
WS2HS
WS2US
WS2TG

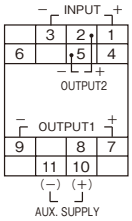

● AC voltage transducer
Type WS2CV

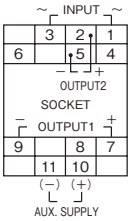

● AC current transducer
Type WS2CA

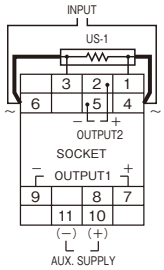

● Thermocouple transducer
Type WS2TC

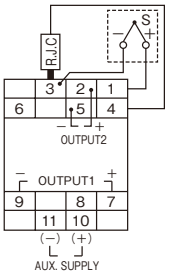

● Temperature measuring resistor transducer
Type WS2PT

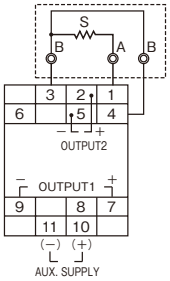

● Potentiometer transducer
Type WS2PM

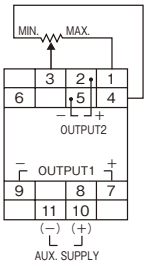

● Distributor
Type WS2DY

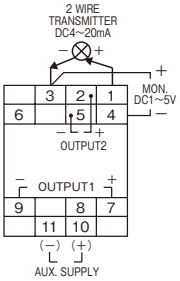

■ Socket mounting dimensions diagram (unit: mm)

● Screw mounting

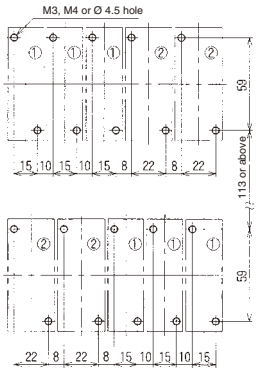

● Rail mounting

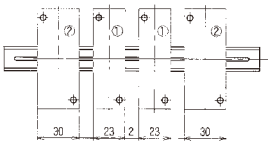

Socket type
(1) WS211
(2) WS212
When arranging socket type WS211 products, leave a clearance of 2 mm or above.

Use IEC 35 mm rail (reinforced type) for the rail. (Recommended product) Fuji Electric FA Components & Systems Co., Ltd. TH35-15AL

The F-MPC analog input unit can monitor energy by inputting analog signals from a pressure gauge, flowmeter, thermometer, hydrometer, etc.

■ Features

- This is an analog input/communication output conversion unit for the power monitoring system F-MPC.
- Available analog inputs are 4 to 20 mA DC, 1 to 5 V DC, 0 to 10 V DC, and so on. As communication outputs, F-MPC-Net and Modbus are available.
- The analog inputs can support two circuits. However, two circuits must be of the same signal specification.
- All types are compliant with the RoHS Directive.
- Mounting multiple-slot base unit is not available.

■ Specifications

Type		WS3MF
Insulated system		Photocoupler system
Standard accuracy		±0.2%
Temperature characteristic		0.2% (percentage to span)
Input circuit	Number of circuits	2 circuits
	Input signal	See the codes shown in the right figure.
	Input resistance	Voltage input: Approx. 1 MΩ, Current input: Approx. 100 Ω
External power supply	Power range and VA consumption	AC80 ～ 264V（AC110V：3.5VA, AC220V：5.0VA） DC80 ～ 264V（DC110V/220V:3.0W）
	Inrush current (time constant)	Rated voltage: 110 V AC/1.7 A or less (approx. 1.8 ms) Rated voltage: 220 V AC/3.3 A or less (approx. 1.8 ms) Rated voltage: 110 V DC/1.2 A or less (approx. 1.8 ms) Rated voltage: 220 V DC/2.4 A or less (approx. 1.8 ms)
Communication output	Standard	EIA RS-485
	Transmission system	Half duplex, two-line type
	Synchronization system	Asynchronous system
	Protocol	F-MPC-Net, or Modbus
	Transmission rate	19200bps
	Transmission code	NRZ
	Start bit	1 bit
	Data length	F-MPC-Net: 7 bits, Modbus: 8 bits
	Parity	Odd
	BCC (CRC)	F-MPC-Net: Even horizontal parity Modbus: CRC-16
	Stop bit	1 bit
	Address	1 to 99 (changeable according to switch setting)
	Transmission character	ASC II code
	Transmission distance	1,000 m (total length)
	Number of connectable units	Up to 64 units/system (including other components)
	Terminating resistor	A terminating resistor (100 Ω) is connected to the transmission line by short-circuiting the DXB and Ter. terminals.
Insulation resistance		50 MΩ or more (500 V DC)
Dielectric strength Between input/output/power supply and ground Between inputs		2000 V AC for 1 minute
Service temperature and humidity ranges		-10 to +55°C, 90% RH or less (no condensation)
Storage temperature		-20 to +70℃
Mass		Approx. 180 g (WS212 socket attached)

■ Ordering information (type)

WS3MF-□□Y□Y□Y 1

Design order

Input signal

23	0 to 50mV DC
33	0 to 60mV DC
11	0 to 100mV DC
12	0 to 1V DC
13	0 to 5V DC
14	0 to 10V DC
15	1 to 5V DC
50	±50mV DC
51	±60mV DC
52	±100mV DC
53	±1V DC
42	±5V DC
24	±10V DC
27	0 to 1mA DC
54	0 to 5mA DC
55	0 to 10mA DC
56	0 to 16mA DC
16	4 to 20mA DC
57	±1mA DC
58	±5mA DC
59	±10mA DC

External power supply

0	80 to 264V AC・DC

Output signal

F	F-MPC-Net Communication output (RS-485)
M	Modbus Communication output (RS-485)

(Note) The socket (WS212) is a standard accessory.

■ Block diagram

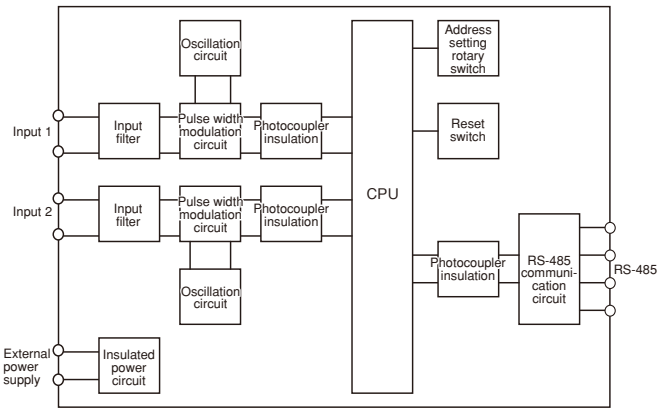

D1

Transducers
F-MPC Analog Input Unit WS3 Series

■ Dimensions, mm

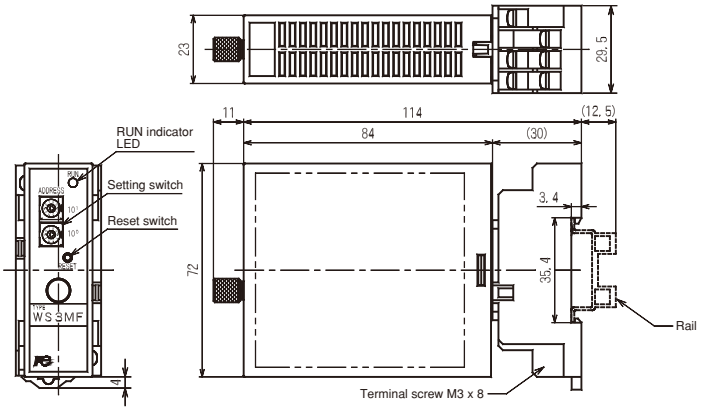

■ External wiring diagram

Socket (WS212)

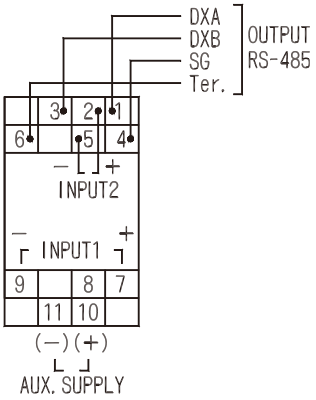

■ Mounting drawing [unit: mm]

• Rail mounting

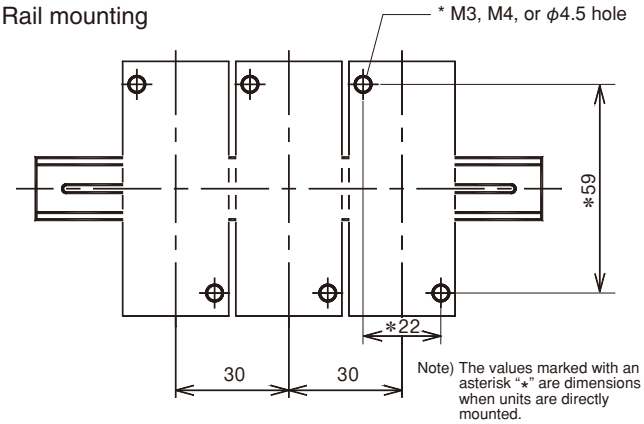

Note) The values marked with an asterisk "*" are dimensions when units are directly mounted.

■ Other specifications

• Electric strength, mechanical strength

Item	Specifications
Overload capacity	Current input circuit: 10 times the rated current for 5 seconds, 1.2 times continuously Voltage input circuit: Twice the rated voltage for 10 seconds, 1.2 times continuously External power supply circuit: 1.5 times 220 V AC for 10 seconds, 264 V AC continuously
Noise immunity	Damping oscillation wave: 2 kV peak voltage at 1 to 1.5 MHz Square wave: 100 ns, 1 μs, 1 kV square wave noise Wave noise: 10 V/m Static electricity: Aerial discharge ±8 kV, contact discharge: ±4 kV
Vibration	10 to 55 Hz, one-way amplitude: 0.15 mm
Shock	Apply a shock of 294 m/s^2 to each of the X-, Y-, and Z-directions three times.

• Other functions

Item	Specifications
Indication: RUN	The LED (green) will remain lit during normal operation when the power is applied. In case of a communication error, the LED will flicker according to the symptom.
Address	Addresses are 01 to 99 (changeable according to the setting of the rotary code switch). The rotary code switch is set at 00 (communication function locked) when the unit is delivered from the plant.

Fuji Electric FA Components & Systems Co., Ltd.
Information subject to change without notice

Transducers
WS4 Series

Small BOX type transducer
Supports 2 systems of IEC 35 mm rail and wall mounting.

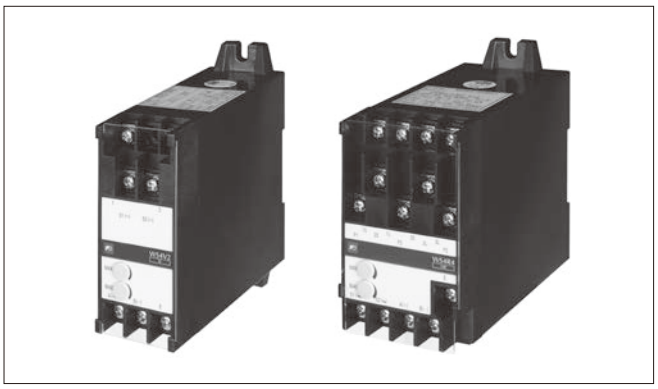

■ Features

- Adopts M4 screws which are optimum for power measurement, and has a compact outer shape.
- Input, output, auxiliary power supply, and earth are isolated from each other.
- Impulse withstand voltage between electric circuit package and earth 5 kV 1.2/50 μs positive/negative polarity 3 times each
- Terminal cover is provided as standard.
- Auxiliary power supply 100/110 VDC (88 to 143 VDC) can also be manufactured.
- Supports 2 systems of IEC 35 mm rail and wall mounting.
- Even with excessive input, the output limiter circuit limits the output to approx. 1.5 times the rated value.
- Test report is attached by standard.

■ Table of product

Model/product name	Type	Input	Output	Page of description
AC voltage transducer (RMS value)	**WS4V1**	AC voltage	DC voltage/current	D1-84
AC voltage transducer (with waveform compensation)	**WS4V2**	AC voltage		D1-85
AC current transducer (RMS value)	**WS4A1**	AC current		D1-86
AC current transducer (with waveform compensation)	**WS4A2**	AC current		D1-87
Single-phase two-wire power	**WS4W1**	AC voltage + current		D1-88
Single-phase three-wire power	**WS4W2**	AC voltage + current		D1-89
Three-phase three-wire power	**WS4W3**	AC voltage + current		D1-90
Three-phase four-wire	**WS4W4**	AC voltage + current		D1-91
Three-phase three-wire reactive power	**WS4R3**	AC voltage + current		D1-92
Three-phase four-wire reactive power	**WS4R4**	AC voltage + current		D1-93
V-V phase angle	**WS4VV**	AC voltage		D1-94
Single-phase two-wire phase angle	**WS4P1**	AC voltage + current		D1-95
Three-phase three-wire V-I phase angle	**WS4P3**	AC voltage + current		D1-96
Three-phase four-wire V-I phase angle	**WS4P4**	AC voltage + current		D1-97
Single-phase two-wire power factor	**WS4C1**	AC voltage + current		D1-98
Three-phase three-wire power factor	**WS4C3**	AC voltage + current		D1-99
Three-phase four-wire power factor	**WS4C4**	AC voltage + current		D1-100
Frequency	**WS4F1**	AC voltage		D1-101
Isolator	**WS4DC**	DC voltage/current		D1-102

■ Common specifications

Item		Specifications
Tolerance		% of output span
Influence of temperature		Tolerance% at 23±10°C
Influence of output load		1/2 of tolerance% as central standard value of rated output load
Influence of frequency		No display: 1/2 of the tolerance% at 45 to 65 Hz Rating Hz display: 1/2 of tolerance% at rated ±5%
Various features		Conforms to JIS C1111-1989
Response time		Time to fall within ±1% of the rated output 1 second or less
Output ripple		1% P-P or less for output span
External adjustment of output		Adjustable ±5%
Output limiter circuit		Limit the over-input output to approx. 1.5 times the rating and protect the output side equipment
Auxiliary power supply		100/110 VAC -15 to +10% or 200/220 VAC -15 to 10% (50/60 Hz) 24 VDC±15% or 48 VDC±15% or 110 VDC (88 to 143 V)
Overvoltage strength	Input	Twice the rated voltage 10 seconds, 1.2 times continuous
	Auxiliary power supply	1.5 times the rated voltage 10 seconds, 1.2 times continuous

Item	Specifications
Overcurrent strength	40 times the rated current 1 second, 10 times 16 seconds, 1.2 times continuous
Insulation resistance	500 VDC 50 MΩ or above between input terminal/output terminal/auxiliary power terminal/outer box (earth)
Withstand voltage	2000 VAC (50/60 Hz) 1 minute between input terminal/output terminal/auxiliary power terminal/outer box (earth)
Impulse withstand voltage	Between electric circuit package and outer box (earth) 5 kV 1.2/50 μs positive/negative polarity 3 times each
Case material	Terminal board: Flame retardant ABS (V-O) Box: Flame retardant ABS (V-O) Terminal cover: Polycarbonate
Terminal screw	M4
Appearance color	Black (Munsell N 1.5)
Specification temperature and humidity range	-10 to +55°C 30 to 85% RH (no condensation)
Storage temperature range	-40 to +70°C

Transducers
AC voltage transducer (RMS value method) WS4V1 Series

WS4V1 converts AC voltage to a DC current/voltage signal and isolates between input/output/auxiliary power supply/earth.
It can measure accurately by distortion waveform (phase control, etc.) using an original RMS value method.

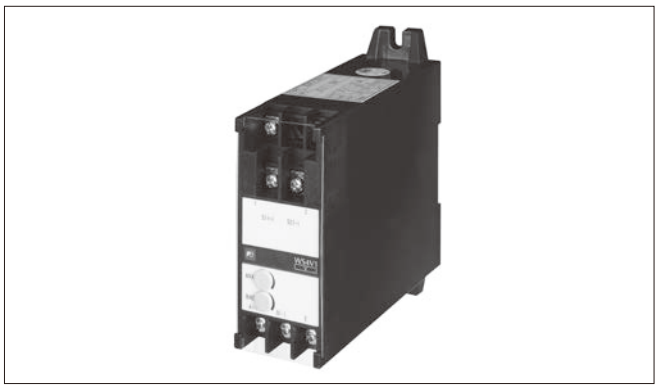

■ Features

- Input, output, auxiliary power supply, and earth are insulated from each other.
- The case uses flame retardant ABS.
- Terminal cover included as standard.
- Connection terminal uses M4 screws.

■ Specifications

Type		WS4V1
Method		RMS value method
Usage conditions		Waveform: 3rd harmonic 15% *
Tolerance		± 0.5 %
Response time		1 sec or less (within ±1% of rated)
Isolation resistance		50 MΩ or above (500 VDC)
Rated frequency		45 to 65 Hz
Consumption VA(W)	Measurement part	Approx. 1.0 VA
	Auxiliary power supply	Approx. 3.0 VA (approx. 3.0 W)
Operating temperature and humidity range		-10 to +55°C 30 to 80% RH (no condensation)
Output adjustment range		± 5 %
Mass		AC power supply approx. 500 g DC power supply approx. 400 g

* We guarantee third harmonic content of 15% or less with tolerance 0.5% or less.

■ Block diagram

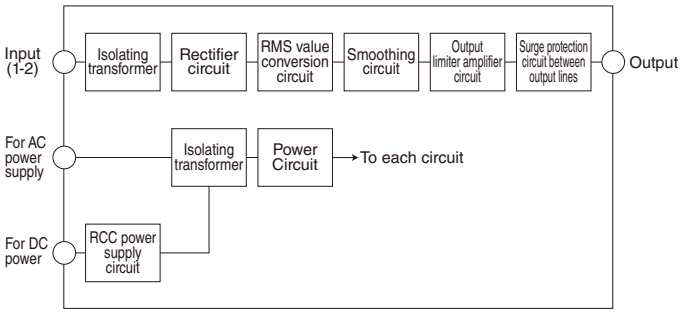

■ External dimensions/External connection diagram

Refer to page D1-103 to D1-104.

■ Type (= Product Code) description

WS4V1-□□□ □ □ 1

Rated input

100	0 to 100 V
110	0 to 110 V
150	0 to 150 V
200	0 to 200 V
300	0 to 300 V
ZZZ	Special

Design rank

Rated output

Z	Special
J	0 to 1 mADC (10 kΩ or less)
H	4 to 20 mADC (550 Ω or less)
C	0 to 10 VDC (2 kΩ or above)
B	0 to 5 VDC (600 Ω or above)

In parentheses, load resistance value

Auxiliary power supply

1	100/110 VAC
2	200/220 VAC
3	24 VDC
4	100/110 VDC (88 to 143 V)
Z	Special

■ Manufacturing range

- Input 0 to 50 V…0 to 300 V
- Output 0 to 0.1 V…0 to 10 V
  0 to 0.1 mA…0 to 20 mA

■ Input-output relationship

Voltage (WS type)

Input	Output
110 V	0 to 5 V
150 V	0 to 10 V
300 V	0 to 1 mA
	0 to 5 mA

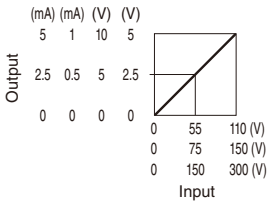

Input	Output
110 V	1 to 5 V
150 V	4 to 20 mA
300 V	

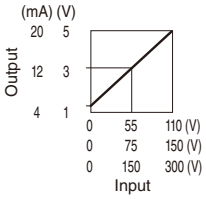

Fuji Electric FA Components & Systems Co., Ltd.
Information subject to change without notice

AC voltage transducer (with waveform compensation) WS4V2 Series

WS4V2 converts AC voltage to a DC current/voltage signal and isolates between input/output/auxiliary power supply/earth.
High precision and low price are realized by our original circuit (with waveform compensation).

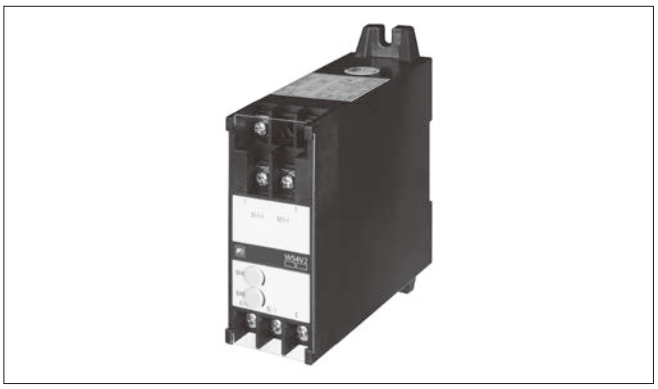

■ Features

- Input, output, auxiliary power supply, and earth are insulated from each other.
- The case uses flame retardant ABS.
- Terminal cover included as standard.
- Connection terminal uses M4 screws.

■ Specifications

Type		WS4V2
Method		With waveform compensation
Usage conditions		Waveform: 3rd harmonic 5%*
Tolerance		± 0.5 %
Response time		1 sec or less (within ±1% of rated)
Isolation resistance		50 MΩ or above (500 VDC)
Rated frequency		45 to 65 Hz
Consumption VA(W)	Measurement part	Approx. 1.0 VA
	Auxiliary power supply	Approx. 1.5 VA (approx. 2.5 W)
Operating temperature and humidity range		-10 to +55°C 30 to 80% RH (no condensation)
Output adjustment range		± 5 %
Mass		AC power supply approx. 500 g DC power supply approx. 400 g

* We guarantee third harmonic content of less than 5% with tolerance 0.5% or less.

■ Block diagram

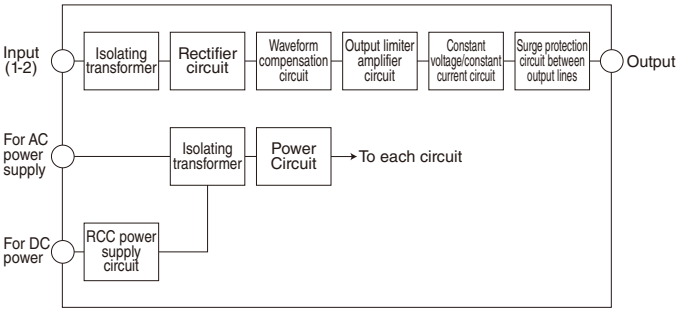

■ External dimensions/External connection diagram

Please refer to page D1-103 to D1-104.

■ Type (= Product Code) description

WS4V2-□□□ □ □ 1

Rated input

100	0 to 100 V
110	0 to 110 V
150	0 to 150 V
200	0 to 200 V
259	0 to 259 V
300	0 to 300 V
ZZZ	Special

Rated output

Z	Special
L	0 to 10 mADC (1 kΩ or less)
K	0 to 5 mADC (2 kΩ or less)
J	0 to 1 mADC (10 kΩ or less)
H	4 to 20 mADC (550 Ω or less)
F	0 to 100 mVDC (200 Ω or above)
D	0 to 1 VDC (200 Ω or above)
C	0 to 10 VDC (2 kΩ or above)
B	0 to 5 VDC (600 Ω or above)
A	1 to 5 VDC (600 Ω or above)

In parentheses, load resistance value

Design rank

Auxiliary power supply

1	100/110 VAC
2	200/220 VAC
3	24 VDC
4	100/110 VDC (88 to 143 V)
Z	Special

■ Manufacturing range

- Input 0 to 50 V…0 to 300 V
- Output 0 to 0.1 V…0 to 10 V
  0 to 0.1mA…0 to 20mA

■ Input-output relationship

Voltage (WS type)

Input	Output
110 V	0 to 5 V
150 V	0 to 10 V
300 V	0 to 1 mA
	0 to 5 mA

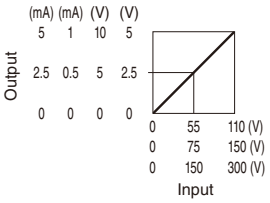

Input	Output
110 V	1 to 5 V
150 V	4 to 20 mA
300 V	

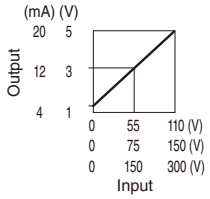

Transducers
AC current transducer (RMS value type) WS4A1 Series

WS4A1 converts AC current to a DC current/voltage signal and isolates between input/output/auxiliary power supply/earth.
It can measure accurately by distortion waveform (phase control, etc.) using an original RMS value method.

■ Features

- Input, output, auxiliary power supply, and earth are insulated from each other.
- The case uses flame retardant ABS.
- Terminal cover included as standard.
- Connection terminal uses M4 screws.

■ Specifications

Type		**WS4A1**
Method		RMS value method
Usage conditions		Waveform: 3rd harmonic 15% *
Tolerance		± 0.5 %
Response time		1 sec or less (within ±1% of rated)
Isolation resistance		50 MΩ or above (500 VDC)
Rated frequency		45 to 65 Hz
Consumption VA(W)	Measurement part	Approx. 0.5 VA
	Auxiliary power supply	Approx. 3.0 VA (approx. 3.0 W)
Operating temperature and humidity range		-10 to +55°C 30 to 80% RH (no condensation)
Output adjustment range		± 5 %
Mass		AC power supply approx. 500 g DC power supply approx. 400 g

* We guarantee third harmonic content of 15% or less with tolerance 0.5% or less.

■ Type (= Product Code) description

WS4A1-□□□ □ □ 1

Rated input

010	0 to 1 A
050	0 to 5 A
ZZZ	Special

Rated output

Z	Special
J	0 to 1 mADC (10 kΩ or less)
H	4 to 20 mADC (550 Ω or less)
C	0 to 10 VDC (2 kΩ or above)
B	0 to 5 VDC (600 Ω or above)

In parentheses, load resistance value

Design rank

Auxiliary power supply

1	100/110 VAC
2	200/220 VAC
3	24 VDC
4	100/110 VDC (88 to 143 V)
Z	Special

■ Block diagram

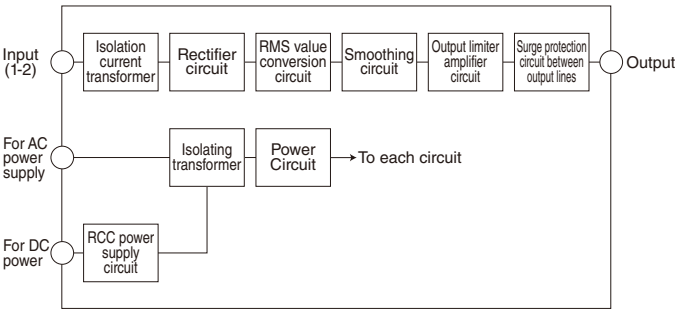

■ Manufacturing range

- Input 0 to 1 A ... 0 to 10 A
- Output 0 to 0.1 V…0 to 10 V
  0 to 0.1mA…0 to 20mA

■ Input-output relationship

Voltage/current (WS type)

Input	Output
1A	0 to 5 V
5A	0 to 10 V
	0 to 1 mA
	0 to 5 mA

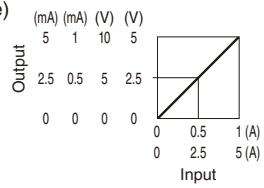

Input	Output
1A	1 to 5 V
5A	4 to 20 mA

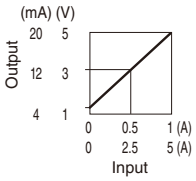

■ External dimensions/External connection diagram

Please refer to page D1-103 to D1-104.

Fuji Electric FA Components & Systems Co., Ltd.
Information subject to change without notice

AC current transducer (with waveform compensation) WS4A2 Series

WS4A2 converts AC current to a DC current/voltage signal and isolates between input/output/auxiliary power supply/earth.
High precision and low price are realized by our original circuit (with waveform compensation).

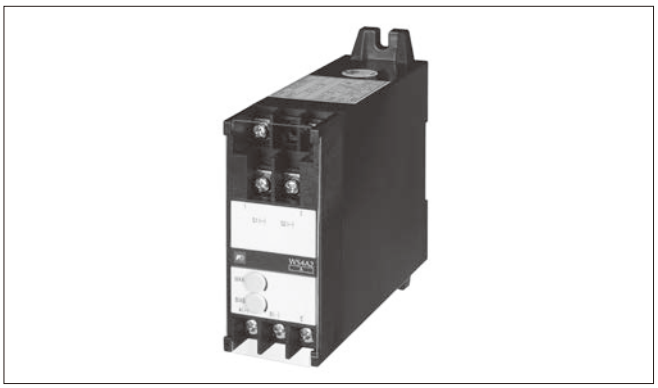

■ Features

- Input, output, auxiliary power supply, and earth are insulated from each other.
- The case uses flame retardant ABS.
- Terminal cover included as standard.
- Connection terminal uses M4 screws.

■ Specifications

Type		WS4A2
Method		With waveform compensation
Usage conditions		Waveform: 3rd harmonic 5%*
Tolerance		± 0.5 %
Response time		1 sec or less (within ±1% of rated)
Isolation resistance		50 MΩ or above (500 VDC)
Rated frequency		45 to 65 Hz
Consumption VA(W)	Measurement part	Approx. 0.5 VA
	Auxiliary power supply	Approx. 1.5 VA (approx. 2.5 W)
Operating temperature and humidity range		-10 to +55°C 30 to 80% RH (no condensation)
Output adjustment range		± 5 %
Mass		AC power supply approx. 500 g DC power supply approx. 400 g

* We guarantee third harmonic content of less than 5% with tolerance 0.5% or less.

■ Block diagram

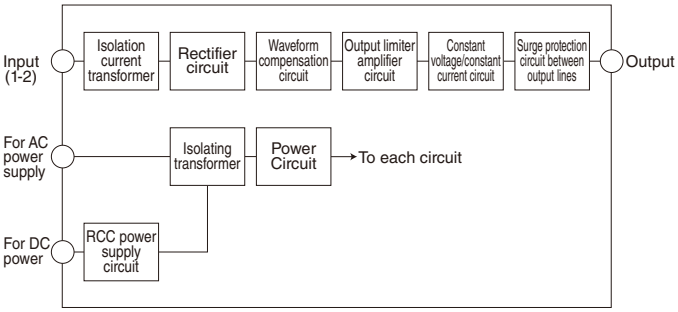

■ External dimensions/External connection diagram

Please refer to page D1-103 to D1-104.

■ Type (= Product Code) description

WS4A2-□□□ □ □ 1

Rated input

010	0 to 1 A
050	0 to 5 A
060	0 to 6 A
100	0 to 10 A
ZZZ	Special

Rated output

Z	Special
L	0 to 10 mADC (1 kΩ or less)
K	0 to 5 mADC (2 kΩ or less)
J	0 to 1 mADC (10 kΩ or less)
H	4 to 20 mADC (550 Ω or less)
F	0 to 100 mVDC (200 Ω or less)
D	0 to 1 VDC (200 Ω or above)
C	0 to 10 VDC (2 kΩ or above)
B	0 to 5 VDC (600 Ω or above)
A	1 to 5 VDC (600 Ω or above)

In parentheses, load resistance value

Auxiliary power supply

1	100/110 VAC
2	200/220 VAC
3	24 VDC
4	100/110 VDC (88 to 143 V)
Z	Special

Design rank

■ Manufacturing range

- Input 0 to 1 A ... 0 to 10 A
- Output 0 to 0.1 V…0 to 10 V
  0 to 0.1mA…0 to 20mA

■ Input-output relationship

Voltage/current (WS type)

Input	Output
1A	0 to 5 V
5A	0 to 10 V
	0 to 1 mA
	0 to 5 mA

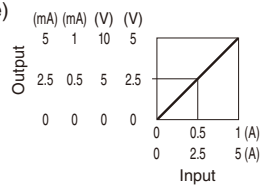

Input	Output
1A	1 to 5 V
5A	4 to 20 mA

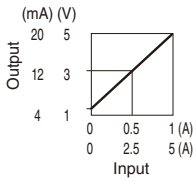

Transducers
Single-phase two-wire power transducer WS4W1 Series

WS4W1 converts single-phase two-wire power to a DC voltage/current signal and isolates between input/output/auxiliary power supply/earth. With our original time division multiplication method, it can accurately convert DC even with a distorted waveform (phase control, etc.).

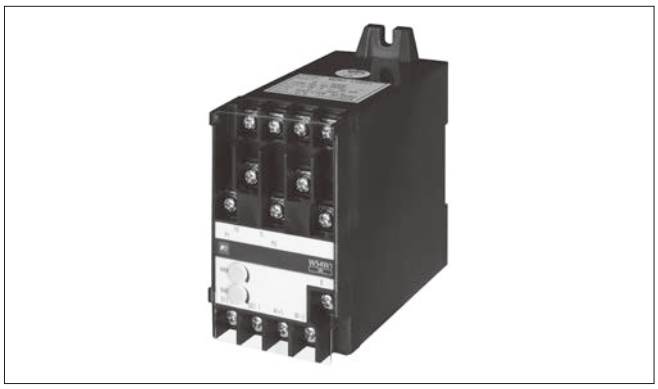

■ Features

- Input, output, auxiliary power supply, and earth are insulated from each other.
- The case uses flame retardant ABS.
- Terminal cover included as standard.
- Connection terminal uses M4 screws.

■ Specifications

Type		WS4W1
Method		Time division multiplication method
Tolerance		± 0.5 %
Response time		1 sec or less (within ±1% of rated)
Isolation resistance		50 MΩ or above (500 VDC)
Rated frequency		50/60 Hz
Consumption VA(W)	Measurement part	Approx. 0.5 VA/phase on both voltage and current side
	Auxiliary power supply	Approx. 3.0 VA (approx. 3.0 W)
Operating temperature and humidity range		-10 to +55°C 30 to 80% RH (no condensation)
Output adjustment range		± 5 %
Mass		AC power supply approx. 700 g DC power supply approx. 600 g

■ Type (= Product Code) description

WS4W1–□□□□□1

Input

Z	Special	
D	±1 kW(±200 W)	200 V Series
C	±833 W(±166.7 W)	200 V Series
B	±750 W(±150 W)	200 V Series
A	±500 W(±100 W)	100/200 V Series
4	0 to 1 kW (0 to 200 W)	200 V Series
3	0 to 833 W (0 to 166.7 W)	200 V Series
2	0 to 750 W (0 to 150 W)	200 V Series
1	0 to 500 W (0 to 100 W)	100/200 V Series

In parentheses, case of rating 1 A

Rated voltage

1	110 VAC
2	220 VAC
A	100 VAC
B	105 VAC
C	115 VAC
F	200 VAC
G	210 VAC
Z	special

Rated current

1	1 AAC
5	5 AAC
Z	special

Rated output

Z	special
S	±5 VDC (600 Ω or above)
L	0 to 10 mADC (1 kΩ or less)
K	0 to 5 mADC (2 kΩ or less)
J	0 to 1 mADC (10 kΩ or less)
H	4 to 20 mADC (550 Ω or less)
G	±1 mADC (10 kΩ or less)
F	0 to 100 mVDC (200 Ω or above)
E	±10 VDC (2 kΩ or above)
D	0 to 1 VDC (200 Ω or above)
C	0 to 10 VDC (2 kΩ or above)
B	0 to 5 VDC (600 Ω or above)
A	1 to 5 VDC (600 Ω or above)

In parentheses, load resistance value

Auxiliary power supply

1	100/110 VAC
2	200/220 VAC
3	24 VDC
4	100/110 VDC (88 to 143 V)
Z	special

Design rank

■ Block diagram

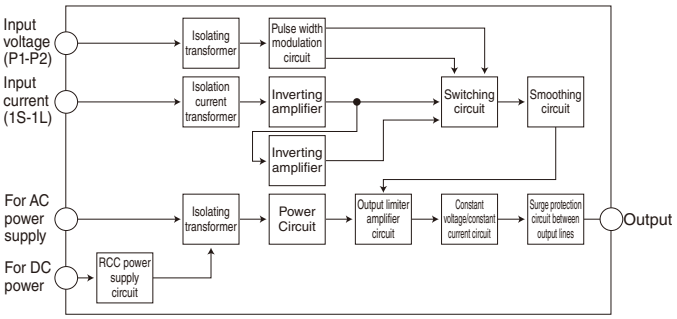

■ External dimensions/External connection diagram

Please refer to page D1-103 to D1-104.

■ Manufacturing range

- Input 0 to 50 V…0 to 240 V
  Please contact us for the current values
- Output ±0.1 to ±10 V
  -5 to +20 mA (0 to 0.1 ... 0 to 20 mA)
  ± possible within the above range. Minimum ±0.1 mA

■ Input-output relationship

Power (WS type)

Input	Output
100 W	0 to 5 V
200 W	0 to 10 V
400 W	0 to 1 mA
500 W	0 to 5 mA
1 kW	
2 kW	

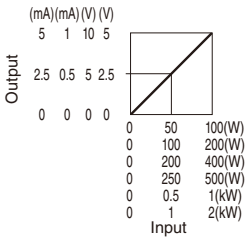

Input	Output
100 W	1 to 5 V
200 W	4 to 20 mA
400 W	
500 W	
1 kW	
2 kW	

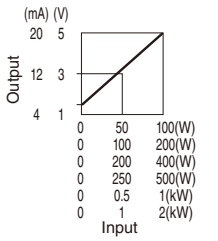

Input	Output
-100 to 0 to 100 W	-5 to 0 to +5 V
-200 to 0 to 200 W	
-400 to 0 to 400 W	
-500 to 0 to 500 W	
-1 kW to 0 to 1 kW	
-2 kW to 0 to 2 kW	

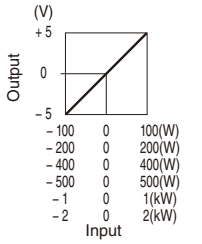

Single-phase three-wire power transducer WS4W2 Series

WS4W2 converts single-phase three-wire power to a DC voltage/ current signal and isolates between input/output/auxiliary power supply/earth.
With our original time division multiplication method, it can accurately convert DC even with a distorted waveform (phase control, etc.).

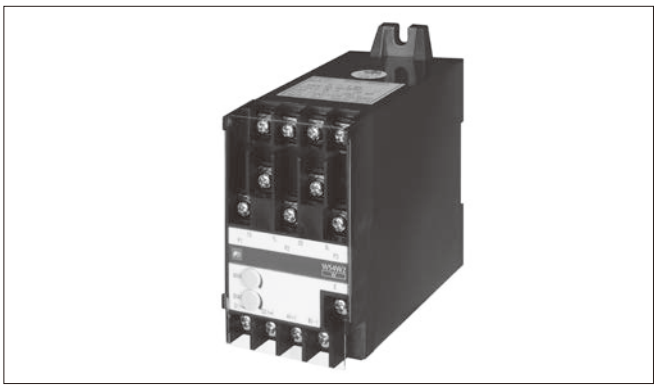

■ Features

- Input, output, auxiliary power supply, and earth are insulated from each other.
- The case uses flame retardant ABS.
- Terminal cover included as standard.
- Connection terminal uses M4 screws.

■ Specifications

Type		WS4W2
Method		Time division multiplication method
Tolerance		± 0.5 %
Response time		1 sec or less (within ±1% of rated)
Isolation resistance		50 MΩ or above (500 VDC)
Rated frequency		50/60 Hz
Consumption VA(W)	Measurement part	Approx. 0.5 VA/phase on both voltage and current side
	Auxiliary power supply	Approx. 3.0 VA (approx. 3.0 W)
Operating temperature and humidity range		-10 to +55°C 30 to 80% RH (no condensation)
Output adjustment range		± 5 %
Mass		AC power supply approx. 700 g DC power supply approx. 600 g

■ Block diagram

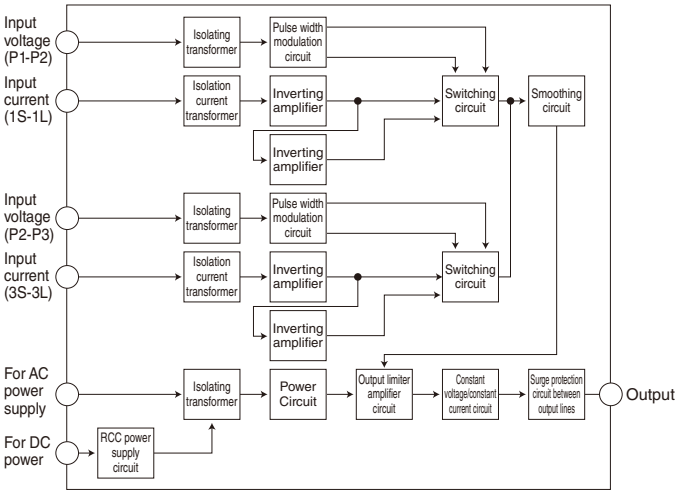

■ External dimensions/External connection diagram

Please refer to page D1-103 to D1-104.

■ Type (= Product Code) description

WS4W2–□□□□□1

Input

Z	Special
D	±1 kW (±200 W)
C	± 833 W (±166.7 W)
B	±750 W (±150 W)
A	±500 W (±100 W)
4	0 to 1 kW (0 to 200 W)
3	0 to 833 W (0 to 166.7 W)
2	0 to 750 W (0 to 150 W)
1	0 to 500 W (0 to 100 W)

In parentheses, case of rating 1 A

Rated voltage

Z	special
C	115 VAC
B	105 VAC
A	100 VAC
1	110 VAC

Phase voltage versus neutral point

Rated current

1	1 AAC
5	5 AAC
Z	special

Rated output

Z	special
S	±5 VDC (600 Ω or above)
L	0 to 10 mADC (1 kΩ or less)
K	0 to 5 mADC (2 kΩ or less)
J	0 to 1 mADC (10 kΩ or less)
H	4 to 20 mADC (550 Ω or less)
G	±1 mADC (10 kΩ or less)
F	0 to 100 mVDC (200 Ω or above)
E	±10 VDC (2 kΩ or above)
D	0 to 1 VDC (200 Ω or above)
C	0 to 10 VDC (2 kΩ or above)
B	0 to 5 VDC (600 Ω or above)
A	1 to 5 VDC (600 Ω or above)

In parentheses, load resistance value

Auxiliary power supply

1	100/110 VAC
2	200/220 VAC
3	24 VDC
4	100/110 VDC (88 to 143 V)
Z	special

Design rank

■ Manufacturing range

- Input 0 to 50 V…0 to 240 V
  Please contact us for the current values
- Output ±0.1 to ±10 V
  -5 to +20 mA (0 to 0.1 ... 0 to 20 mA)
  ± possible within the above range. Minimum ±0.1 mA

■ Input-output relationship

Input	Output
100 W	0 to 5 V
	0 to 10 V
200 W	0 to 1 V
	0 to 10 mV
500 W	0 to 100 mV
	0 to 1 mA
1 kW	0 to 5 mA
	0 to 10 mA
	0 to 16 mA
	0 to 20 mA

Input	Output
100 W	1 to 5 V
200 W	4 to 20 mA
500 W	1 to 5 mA
1 kW	2 to 10 mA

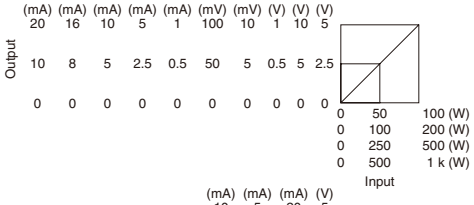

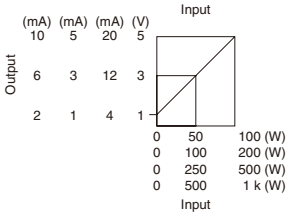

Transducers
Three-phase three-wire power transducer WS4W3 Series

WS4W3 converts three-phase three-wire power to a DC voltage/current signal and isolates between input/output/auxiliary power supply/earth. With our original time division multiplication method, it can accurately convert DC even with a distorted waveform (phase control, etc.).

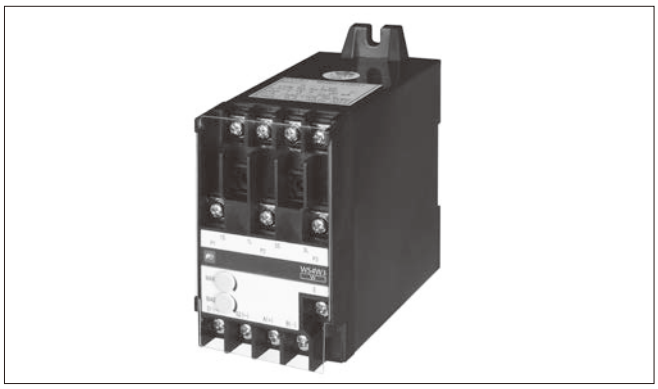

■ Features

- Input, output, auxiliary power supply, and earth are insulated from each other.
- The case uses flame retardant ABS.
- Terminal cover included as standard.
- Connection terminal uses M4 screws.

■ Specifications

Type		WS4W3
Method		Time division multiplication method
Usage conditions		Voltage: unbalanced Current: unbalanced
Tolerance		± 0.5 %
Response time		1 sec or less (within ±1% of rated)
Isolation resistance		50 MΩ or above (500 VDC)
Rated frequency		50/60 Hz
Consumption VA(W)	Measurement part	Approx. 0.5 VA/phase on both voltage and current side
	Auxiliary power supply	Approx. 3.0 VA (approx. 3.0 W)
Operating temperature and humidity range		-10 to +55°C 30 to 80% RH (no condensation)
Output adjustment range		± 5 %
Mass		AC power supply approx. 700 g DC power supply approx. 600 g

■ Type (= Product Code) description

WS4W3–□□□□□1

Input

Z	Special	
G	±2 kW (±400 W)	200 V Series
F	±1.667 kW (±333.3 W)	200 V Series
E	±1.5 kW (±300 W)	200 V Series
D	±1 kW (±200 W)	100/200 V Series
C	±833 W (±166.7 W)	100 V Series
B	±750 W (±150 W)	100 V Series
A	±500 W (±100 W)	100 V Series
7	0 to 2 kW (0 to 400 W)	200 V Series
6	0 to 1.667 kW (0 to 333.3 W)	200 V Series
5	0 to 1.5 kW (0 to 300 W)	200 V Series
4	0 to 1 kW (0 to 200 W)	100/200 V Series
3	0 to 833 W (0 to 166.7 W)	100 V Series
2	0 to 750 W (0 to 150 W)	100 V Series
1	0 to 500 W (0 to 100 W)	100 V Series

In parentheses, case of rating 1 A

Rated voltage

1	110 VAC
2	220 VAC
A	100 VAC
B	105 VAC
C	115 VAC
F	200 VAC
G	210 VAC
Z	special

Rated current

1	1 AAC
5	5 AAC
Z	special

Rated output

Z	special
S	±5 VDC (600 Ω or above)
L	0 to 10 mADC (1 kΩ or less)
K	0 to 5 mADC (2 kΩ or less)
J	0 to 1 mADC (10 kΩ or less)
H	4 to 20 mADC (550 Ω or less)
G	±1 mADC (10 kΩ or less)
F	0 to 100 mVDC (200 Ω or above)
E	±10 VDC (2 kΩ or above)
D	0 to 1 VDC (200 Ω or above)
C	0 to 10 VDC (2 kΩ or above)
B	0 to 5 VDC (600 Ω or above)
A	1 to 5 VDC (600 Ω or above)

In parentheses, load resistance value

Auxiliary power supply

1	100/110 VAC
2	200/220 VAC
3	24 VDC
4	100/110 VDC (88 to 143 V)
Z	special

Design rank

■ Block diagram

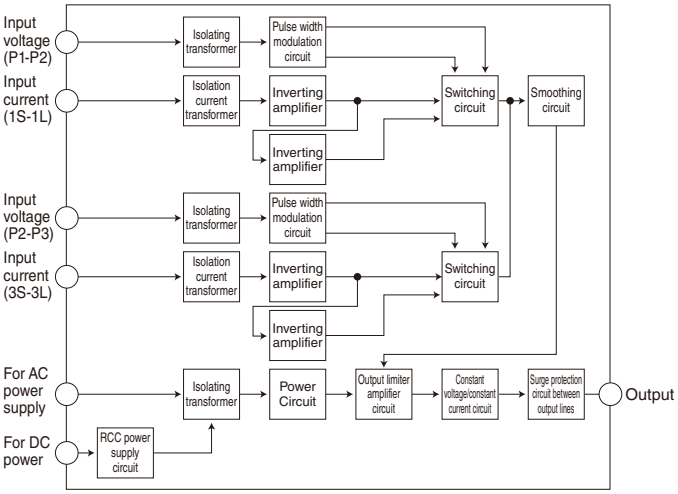

■ Input-output relationship

Power/reactive power (WS type)

Input	Output
100 W	0 to 5 V
200 W	0 to 10 V
400 W	0 to 1 mA
500 W	0 to 5 mA
1 kW	
2 kW	

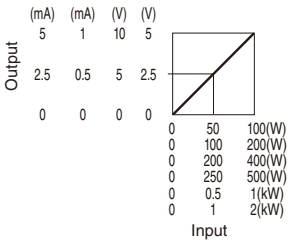

Input	Output
100 W	1 to 5 V
200 W	4 to 20 mA
400 W	
500 W	
1 kW	
2 kW	

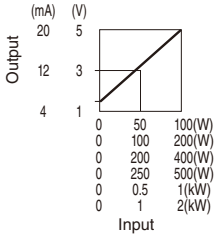

Input	Output
-100 to 0 to 100 W	-5 to 0 to +5 V
-200 to 0 to 200 W	
-400 to 0 to 400 W	
-500 to 0 to 500 W	
-1 kW to 0 to 1 kW	
-2 kW to 0 to 2 kW	

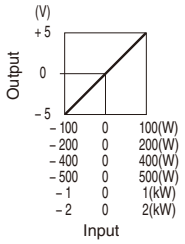

■ External dimensions/External connection diagram

Please refer to page D1-103 to D1-104.

■ Manufacturing range

- Input 0 to 50 V…0 to 240 V
  Please contact us for the current values
- Output ±0.1 to ±10 V
  -5 to +20 mA (0 to 0.1 ... 0 to 20 mA)
  ± possible within the above range. Minimum ±0.1 mA

Fuji Electric FA Components & Systems Co., Ltd.
Information subject to change without notice

Three-phase four-wire power transducer WS4W4 Series

WS4W4 converts three-phase four-wire power to a DC voltage/current signal and isolates between input/output/auxiliary power supply/earth. With our original time division multiplication method, it can accurately convert DC even with a distorted waveform (phase control, etc.).

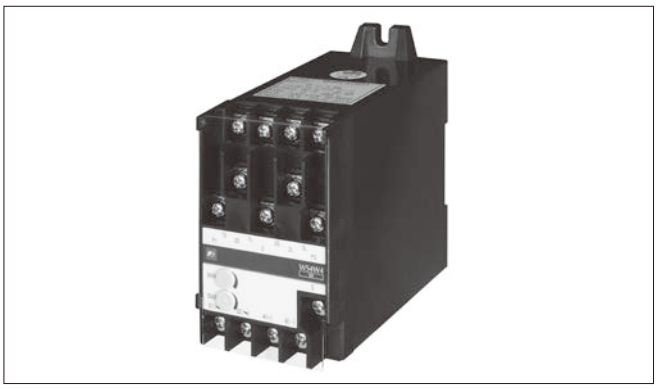

■ Features

- Input, output, auxiliary power supply, and earth are insulated from each other.
- The case uses flame retardant ABS.
- Terminal cover included as standard.
- Connection terminal uses M4 screws.

■ Specifications

Type		WS4W4
Method		Time division multiplication method
Usage conditions		Voltage: balanced (phase voltage) Positive phase order Current: unbalanced
Tolerance		± 0.5 %
Response time		1 sec or less (within ±1% of rated)
Isolation resistance		50 MΩ or above (500 VDC)
Rated frequency		50/60 Hz
Consumption VA(W)	Measurement part	Approx. 0.5 VA/phase on both voltage and current side
	Auxiliary power supply	Approx. 3.0 VA (approx. 3.0 W)
Operating temperature and humidity range		-10 to +55°C 30 to 80% RH (no condensation)
Output adjustment range		± 5 %
Mass		AC power supply approx. 700 g DC power supply approx. 600 g

■ Block diagram

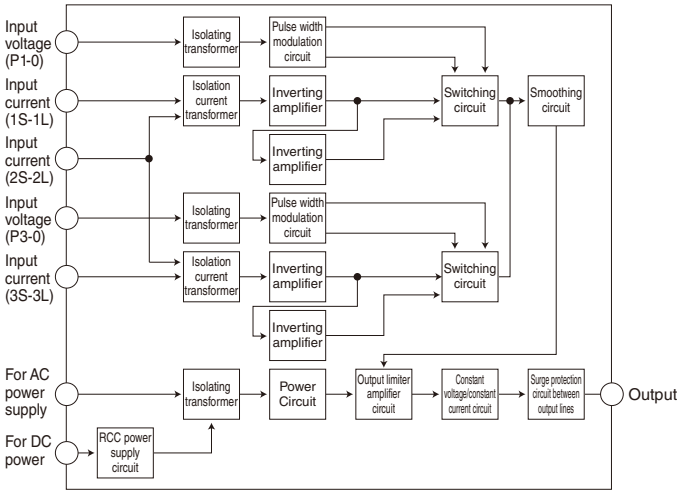

■ External dimensions/External connection diagram

Please refer to page D1-103 to D1-104.

■ Manufacturing range

- Input 0 to 50 V…0 to 240 V
  Please contact us for the current values
- Output ±0.1 to ±10 V
  -5 to +20 mA (0 to 0.1 ... 0 to 20 mA)
  ± possible within the above range. Minimum ±0.1 mA

■ Type (= Product Code) description

WS4W4–□□□□□1

Input

Z	Special	
G	±2 kW (±400 W)	200 V Series
F	±1.667 kW (±333.3 W)	200 V Series
E	±1.5 kW (±300 W)	200 V Series
D	±1 kW (±200 W)	100/200 V Series
C	±833 W (±166.7 W)	100 V Series
B	±750 W (±150 W)	100 V Series
A	±500 W (±100 W)	100 V Series
7	0 to 2 kW (0 to 400 W)	200 V Series
6	0 to 1.667 kW (0 to 333.3 W)	200 V Series
5	0 to 1.5 kW (0 to 300 W)	200 V Series
4	0 to 1 kW (0 to 200 W)	100/200 V Series
3	0 to 833 W (0 to 166.7 W)	100 V Series
2	0 to 750 W (0 to 150 W)	100 V Series
1	0 to 500 W (0 to 100 W)	100 V Series

In parentheses, case of rating 1 A

Rated voltage

Z	special
G	210/√3 VAC
F	200/√3 VAC
C	115/√3 VAC
B	105/√3 VAC
A	100/√3 VAC
2	220/√3 VAC
1	110/√3 VAC

Phase voltage

Rated current

1	1 AAC
5	5 AAC
Z	special

Design rank

Auxiliary power supply

1	100/110 VAC
2	200/220 VAC
3	24 VDC
4	100/110 VDC (88 to 143 V)
Z	special

Rated output

Z	special
S	±5 VDC (600 Ω or above)
L	0 to 10 mADC (1 kΩ or less)
K	0 to 5 mADC (2 kΩ or less)
J	0 to 1 mADC (10 kΩ or less)
H	4 to 20 mADC (550 Ω or less)
G	±1 mADC (10 kΩ or less)
F	0 to 100 mVDC (200 Ω or above)
E	±10 VDC (2 kΩ or above)
D	0 to 1 VDC (200 Ω or above)
C	0 to 10 VDC (2 kΩ or above)
B	0 to 5 VDC (600 Ω or above)
A	1 to 5 VDC (600 Ω or above)

In parentheses, load resistance value

■ Input-output relationship

Power (WS type)

Input	Output
100 W	0 to 5 V
200 W	0 to 10 V
400 W	0 to 1 mA
500 W	0 to 5 mA
1 kW	
2 kW	

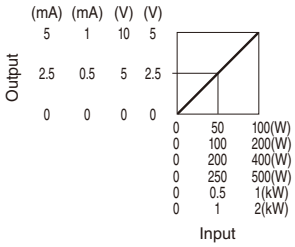

Input	Output
100 W	1 to 5 V
200 W	4 to 20 mA
400 W	
500 W	
1 kW	
2 kW	

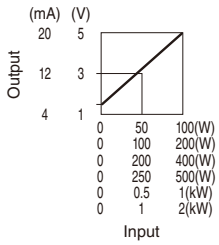

Input	Output
-100 to 0 to 100 W	-5 to 0 to +5 V
-200 to 0 to 200 W	
-400 to 0 to 400 W	
-500 to 0 to 500 W	
-1 kW to 0 to 1 kW	
-2 kW to 0 to 2 kW	

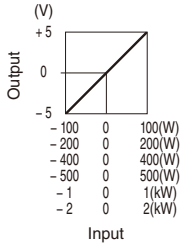

Transducers
Three-phase three-wire reactive power transducer WS4R3 Series

WS4R3 converts three-phase three-wire reactive power to a DC voltage/current signal and isolates between input/output/auxiliary power supply/earth.
With our original time division multiplication method, it can accurately convert DC even with a distorted waveform.

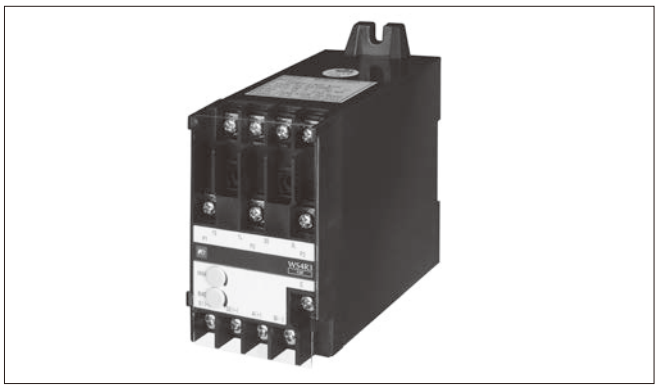

■ Features

- Input, output, auxiliary power supply, and earth are insulated from each other.
- The case uses flame retardant ABS.
- Terminal cover included as standard.
- Connection terminal uses M4 screws.

■ Specifications

Type		WS4R3
Method		Time division multiplication method
Usage conditions		Voltage: balanced Positive phase order Current: unbalanced
Tolerance		± 0.5 %
Response time		1 sec or less (within ±1% of rated)
Isolation resistance		50 MΩ or above (500 VDC)
Rated frequency		50/60 Hz
Consumption VA(W)	Measurement part	Approx. 0.5 VA/phase on both voltage and current side
	Auxiliary power supply	Approx. 3.0 VA (approx. 3.0 W)
Operating temperature and humidity range		-10 to +55°C 30 to 80% RH (no condensation)
Output adjustment range		± 5 %
Mass		AC power supply approx. 700 g DC power supply approx. 600 g

■ Block diagram

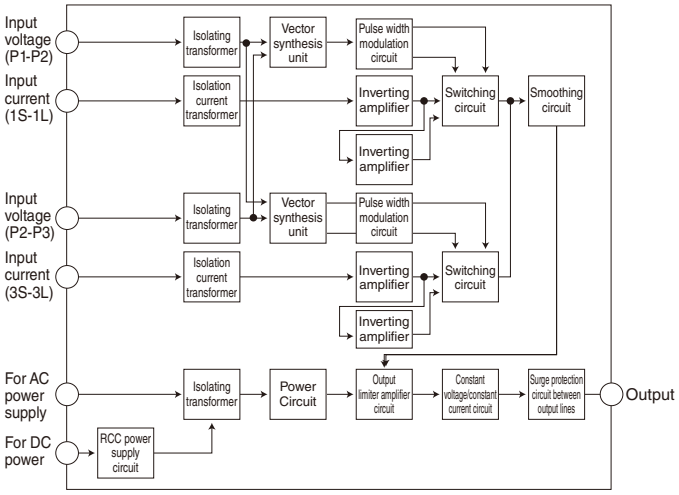

■ External dimensions/External connection diagram

Please refer to page D1-103 to D1-104.

■ Manufacturing range

- Input 0 to 50 V…0 to 240 V
  Please contact us for the current values
- Output ±0.1 to ±10 V
  -5 to +20 mA (0 to 0.1 ... 0 to 20 mA)
  ± possible within the above range. Minimum ±0.1 mA

■ Type (= Product Code) description

WS4R3–□□□□□1

Input

Z	Special	
7	LEAD2 to LAG2 kvar (LEAD400 to LAG400var)	200 V Series
6	LEAD1.667 to LAG1.667 kvar (LEAD333.3 to LAG333.3var)	200 V Series
5	LEAD1.5 to LAG1.5 kvar (LEAD300 to LAG300var)	200 V Series
4	LEAD1 to LAG1 kvar (LEAD200 to LAG200var)	200 V Series / 100 V Series
3	LEAD833 to LAG833var (LEAD166.7 to LAG166.7var)	100 V Series
2	LEAD750 to LAG750var (LEAD150 to LAG150var)	100 V Series
1	LEAD500 to LAG500var (LEAD100 to LAG100var)	100 V Series

In parentheses, case of rating 1 A

Rated voltage

1	110 VAC
2	220 VAC
A	100 VAC
B	105 VAC
C	115 VAC
F	200 VAC
G	210 VAC
Z	special

Rated current

1	1 AAC
5	5 AAC
Z	special

Rated output

Z	special
S	±5 VDC (600 Ω or above)
L	0 to 10 mADC (1 kΩ or less)
K	0 to 5 mADC (2 kΩ or less)
J	0 to 1 mADC (10 kΩ or less)
H	4 to 20 mADC (550 Ω or less)
G	±1 mADC (10 kΩ or less)
F	0 to 100 mVDC (200 Ω or above)
E	±10 VDC (2 kΩ or above)
D	0 to 1 VDC (200 Ω or above)
C	0 to 10 VDC (2 kΩ or above)
B	0 to 5 VDC (600 Ω or above)
A	1 to 5 VDC (600 Ω or above)

In parentheses, load resistance value

Auxiliary power supply

1	100/110 VAC
2	200/220 VAC
3	24 VDC
4	100/110 VDC (88 to 143 V)
Z	special

Design rank

■ Input-output relationship

Reactive power (WS type)

Input	Output
100 var	0 to 5 V
200 var	0 to 10 V
400 var	0 to 1 mA
500 var	0 to 5 mA
1 kvar	
2 kvar	

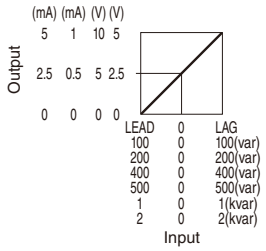

Input	Output
100 var	1 to 5 V
200 var	4 to 20 mA
400 var	
500 var	
1 kvar	
2 kvar	

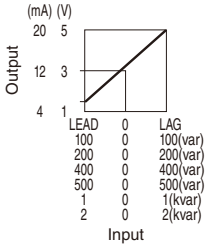

Input	Output
100 var	-5 to 0 to +5 V
200 var	
400 var	
500 var	
1 kvar	
2 kvar	

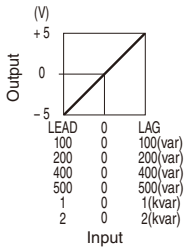

Three-phase four-wire reactive power transducer WS4R4 Series

WS4R4 converts three-phase four-wire reactive power to a DC voltage/ current signal and isolates between input/output/auxiliary power supply/earth.
With our original time division multiplication method, it can accurately convert DC even with a distorted waveform.

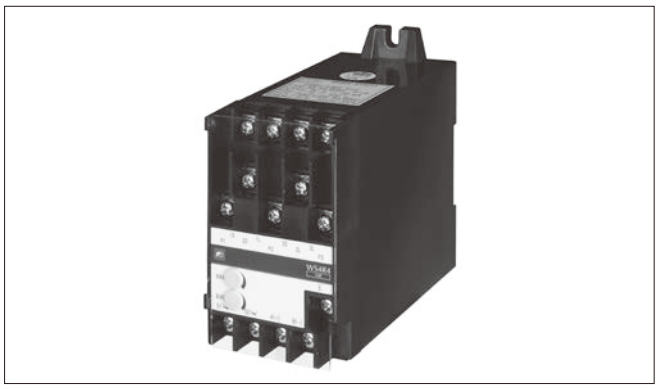

■ Features

- Input, output, auxiliary power supply, and earth are insulated from each other.
- The case uses flame retardant ABS.
- Terminal cover included as standard.
- Connection terminal uses M4 screws.

■ Specifications

Type		WS4R4
Method		Time division multiplication method
Usage conditions		Voltage: balanced (line to line) Positive phase order Current: unbalanced
Tolerance		± 0.5 %
Response time		1 sec or less (within ±1% of rated)
Isolation resistance		50 MΩ or above (500 VDC)
Rated frequency		50/60 Hz
Consumption VA(W)	Measurement part	Approx. 0.5 VA/phase on both voltage and current side
	Auxiliary power supply	Approx. 3.0 VA (approx. 3.0 W)
Operating temperature and humidity range		-10 to +55°C 30 to 80% RH (no condensation)
Output adjustment range		± 5 %
Mass		AC power supply approx. 700 g DC power supply approx. 600 g

■ Type (= Product Code) description

WS4R4–□□□□□1

Input

Z	Special	
7	LEAD2 to LAG2 kvar (LEAD400 to LAG400 var)	200 V Series
6	LEAD1.667 to LAG1.667 kvar (LEAD333.3 to LAG333.3 var)	200 V Series
5	LEAD1.5 to LAG1.5 kvar (LEAD300 to LAG300 var)	200 V Series
4	LEAD1 to LAG1 kvar (LEAD200 to LAG200 var)	200 V Series / 100 V Series
3	LEAD833 to LAG833 var (LEAD166.7 to LAG166.7 var)	100 V Series
2	LEAD750 to LAG750 var (LEAD150 to LAG150 var)	100 V Series
1	LEAD500 to LAG500 var (LEAD100 to LAG100 var)	100 V Series

In parentheses, case of rating 1 A

Rated voltage

Z	special
G	210 VAC
F	200 VAC
C	115 VAC
B	105 VAC
A	100 VAC
2	220 VAC
1	110 VAC

Line voltage

Rated current

1	1 AAC
5	5 AAC
Z	special

Rated output

Z	special
S	±5 VDC (600 Ω or above)
L	0 to 10 mADC (1 kΩ or less)
K	0 to 5 mADC (2 kΩ or less)
J	0 to 1 mADC (10 kΩ or less)
H	4 to 20 mADC (550 Ω or less)
G	±1 mADC (10 kΩ or less)
F	0 to 100 mVDC (200 Ω or above)
E	±10 VDC (2 kΩ or above)
D	0 to 1 VDC (200 Ω or above)
C	0 to 10 VDC (2 kΩ or above)
B	0 to 5 VDC (600 Ω or above)
A	1 to 5 VDC (600 Ω or above)

In parentheses, load resistance value

Design rank

Auxiliary power supply

1	100/110 VAC
2	200/220 VAC
3	24 VDC
4	100/110 VDC (88 to 143 V)
Z	special

■ Block diagram

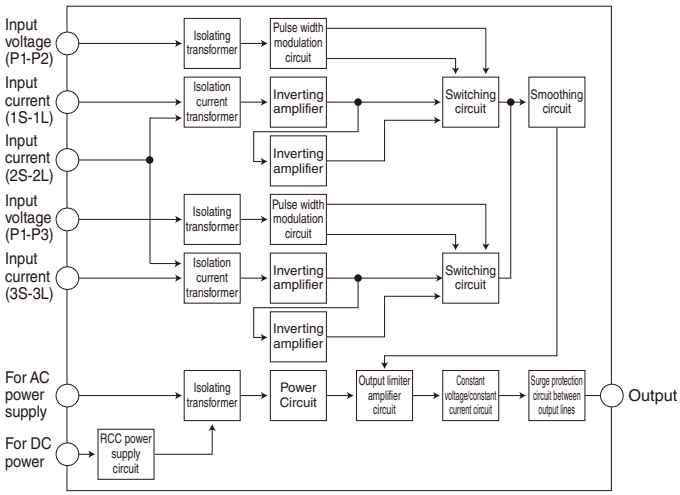

■ Input-output relationship

Reactive power (WS type)

Input	Output
100 var	0 to 5 V
200 var	0 to 10 V
400 var	0 to 1 mA
500 var	0 to 5 mA
1 kvar	
2 kvar	

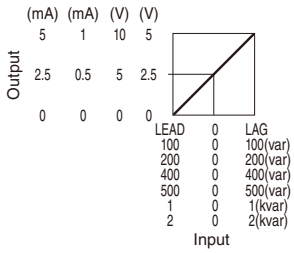

Input	Output
100 var	1 to 5 V
200 var	4 to 20 mA
400 var	
500 var	
1 kvar	
2 kvar	

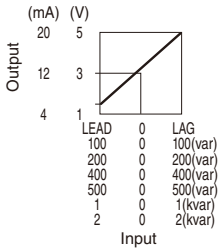

Input	Output
100 var	-5 to 0 to +5 V
200 var	
400 var	
500 var	
1 kvar	
2 kvar	

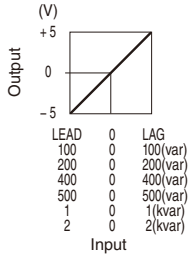

■ External dimensions/External connection diagram

Please refer to page D1-103 to D1-104.

■ Manufacturing range

- Input 0 to 50 V…0 to 240 V
  Please contact us for the current values
- Output ±0.1 to ±10 V
  -5 to +20 mA (0 to 0.1 ... 0 to 20 mA)
  ± possible within the above range. Minimum ±0.1 mA

Transducers
V-V phase angle transducer WS4VV Series

WS4VV converts voltage phase difference to a DC voltage/current signal and isolates between input/output/auxiliary power supply/earth.

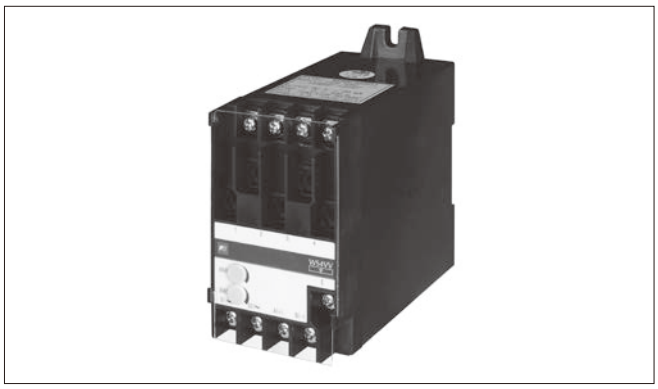

■ Features

- Input, output, auxiliary power supply, and earth are insulated from each other.
- The case uses flame retardant ABS.
- Terminal cover included as standard.
- Connection terminal uses M4 screws.

■ Specifications

Type		WS4VV
Method		Phase difference
Usage conditions		Distortion factor 5% or less
Tolerance		± 1.0 %
Response time		1 sec or less (within ±1% of rated)
Isolation resistance		50 MΩ or above (500 VDC)
Consumption VA(W)	Measurement part	Approx. 0.5 VA
	Auxiliary power supply	Approx. 3.0 VA (approx. 3.0 W)
Operating temperature and humidity range		-10 to +55°C 30 to 80% RH (no condensation)
Output adjustment range		± 5 %
Mass		AC power supply approx. 700 g DC power supply approx. 600 g

■ Block diagram

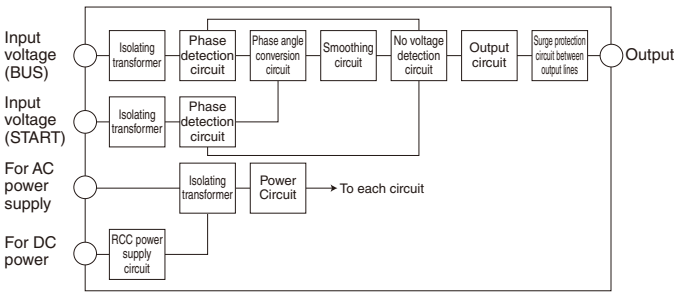

■ External dimensions/External connection diagram

Please refer to page D1-103 to D1-104.

(Note) When the input of BUS or START is 0 V, the output swings to the minus side. (When auxiliary power is supplied)

■ Manufacturing range

- Input 0 to 50 V…0 to 240 V
- Output ±0.1 to ±10 V
  -5 to +20 mA (0 to 0.1 ... 0 to 20 mA)
  ± possible within the above range. Minimum ±0.1 mA

■ Type (= Product Code) description

WS4VV–□□□□□1

Input

3	LEAD 30° to 0° to LAG 30°
4	LEAD 45° to 0° to LAG 45°
9	LEAD 90° to 0° to LAG 90° (special rating)
Z	special

Rated voltage

1	110 VAC
2	220 VAC
D	110/√3 VAC
H	220/√3 VAC
Z	special

Rated frequency

5	50 Hz
6	60 Hz

Design rank

Auxiliary power supply

1	100/110 VAC
2	200/220 VAC
3	24 VDC
4	100/110 VDC (88 to 143 V)
Z	special

Rated output

Z	special
S	±5 VDC (600 Ω or above)
L	0 to 10 mADC (1 kΩ or less)
K	0 to 5 mADC (2 kΩ or less)
J	0 to 1 mADC (10 kΩ or less)
H	4 to 20 mADC (550 Ω or less)
G	±1 mADC (10 kΩ or less)
F	0 to 100 mVDC (200 Ω or above)
E	±10 VDC (2 kΩ or above)
D	0 to 1 VDC (200 Ω or above)
C	0 to 10 VDC (2 kΩ or above)
B	0 to 5 VDC (600 Ω or above)
A	1 to 5 VDC (600 Ω or above)

In parentheses, load resistance value

■ Input-output relationship

The phase difference to the BUS side is output.

Input	Output
LEAD 30° to 0° to LAG 30°	-1 to 0 to +1 mADC

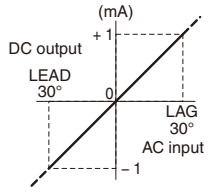

Input	Output
LEAD 30° to 0° to LAG 30°	4 to 12 to 20 mADC

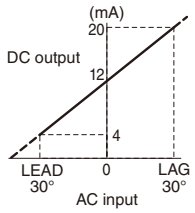

Single-phase two-wire V-I phase angle transducer WS4P1 Series

WS4P1 converts single-phase two-wire voltage-current phase difference to a DC voltage/current signal and isolates between input/output/auxiliary power supply/earth.

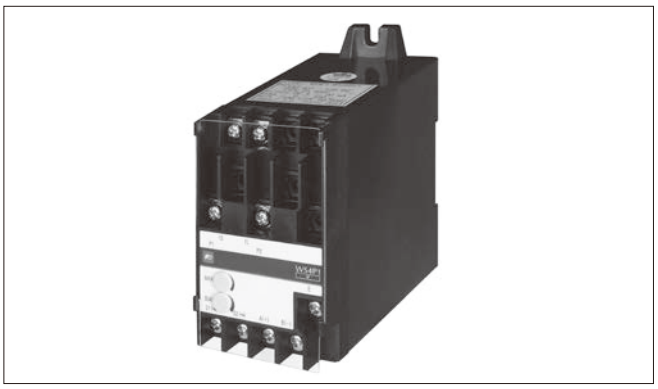

■ Features

- Input, output, auxiliary power supply, and earth are insulated from each other.
- The case uses flame retardant ABS.
- Terminal cover included as standard.
- Connection terminal uses M4 screws.

■ Specifications

Type		WS4P1
Method		Phase difference
Usage conditions		Distortion factor 5% or less
Tolerance		± 3.0 %
Response time		1 sec or less (within ±1% of rated)
Isolation resistance		50 MΩ or above (500 VDC)
Consumption VA(W)	Measurement part	Approx. 0.5 VA current/each phase/voltage
	Auxiliary power supply	Approx. 3.0 VA (approx. 3.0 W)
Operating temperature and humidity range		-10 to +55°C 30 to 80% RH (no condensation)
Output adjustment range		± 5 %
Mass		AC power supply approx. 700 g DC power supply approx. 600 g

■ Block diagram

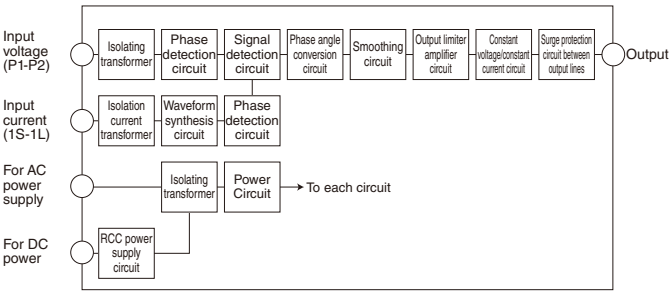

■ External dimensions/External connection diagram

Please refer to page D1-103 to D1-104.

(Note) When the input voltage is 0 V or the input current is 0 A, the output becomes almost 0°. (When auxiliary power is supplied)

■ Type (= Product Code) description

WS4P1–□□□□□□1

Input

6	ADAD 60° to 0° to LAG60°
9	LEAD90° to 0° to LAG90°
Z	special

Rated voltage

1	110 VAC
2	220 VAC
A	100 VAC
B	105 VAC
C	115 VAC
F	200 VAC
G	210 VAC
Z	special

Rated current

1	1 AAC
5	5 AAC
Z	special

Rated frequency

5	50 Hz
6	60 Hz

Design rank

Auxiliary power supply

1	100/110 VAC
2	200/220 VAC
3	24 VDC
4	100/110 VDC (88 to 143 V)
Z	special

Rated output

Z	special
S	±5 VDC (600 Ω or above)
L	0 to 10 mADC (1 kΩ or less)
K	0 to 5 mADC (2 kΩ or less)
J	0 to 1 mADC (10 kΩ or less)
H	4 to 20 mADC (550 Ω or less)
G	±1 mADC (10 kΩ or less)
F	0 to 100 mVDC (200 Ω or above)
E	±10 VDC (2 kΩ or above)
D	0 to 1 VDC (200 Ω or above)
C	0 to 10 VDC (2 kΩ or above)
B	0 to 5 VDC (600 Ω or above)
A	1 to 5 VDC (600 Ω or above)

In parentheses, load resistance value

■ Manufacturing range

- Input Within the above type range
- Output Within the above type range

■ Input-output relationship

Phase angle (WS type)

Input	Output
LEAD LAG 60° to 0 to 60°	0 to 5 V 0 to 10 V
LEAD LAG 90° to 0 to 90°	0 to 1 mA 0 to 5 mA

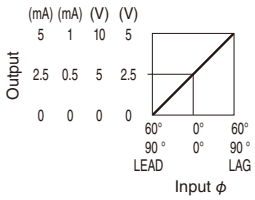

Input	Output
LEAD LAG 60° to 0 to 60°	1 to 5 V * 4 to 20 mA *
LEAD LAG 90° to 0 to 90°	

* When the input becomes 0%, the output becomes equivalent to 0° (approx. 3 V or approx. 12 mA)

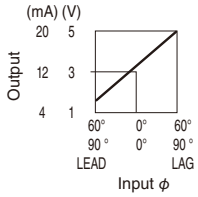

Input	Output
LEAD LAG 60° to 0 to 60°	-5 to 0 to +5 V
LEAD LAG 90° to 0 to 90°	

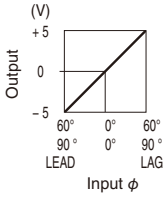

Transducers
Three-phase three-wire V-I phase angle transducer WS4P3 Series

WS4P3 converts three-phase three-wire voltage-current phase difference to a DC voltage/current signal and isolates between input/output/auxiliary power supply/earth.

■ Features

- Input, output, auxiliary power supply, and earth are insulated from each other.
- The case uses flame retardant ABS.
- Terminal cover included as standard.
- Connection terminal uses M4 screws.

■ Specifications

Type		WS4P3
Method		Phase difference
Usage conditions		Distortion factor 5% or less Voltage: balanced Positive phase order Current: unbalanced
Tolerance		± 3.0 %
Response time		1 sec or less (within ±1% of rated)
Isolation resistance		50 MΩ or above (500 VDC)
Consumption VA(W)	Measurement part	Approx. 0.5 VA current/each phase/voltage
	Auxiliary power supply	Approx. 3.0 VA (approx. 3.0 W)
Operating temperature and humidity range		-10 to +55°C 30 to 80% RH (no condensation)
Output adjustment range		± 5 %
Mass		AC power supply approx. 700 g DC power supply approx. 600 g

D1

■ Block diagram

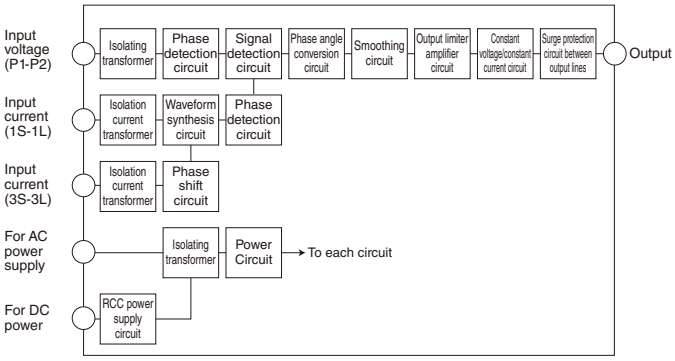

■ External dimensions/External connection diagram

Please refer to page D1-103 to D1-104.

(Note) When the input voltage is 0 V or the input current is 0 A, the output becomes almost 0°. (When auxiliary power is supplied)

■ Type (= Product Code) description

WS4P3–□□□□□□1

Input

6	ADAD 60° to 0° to LAG60°
9	LEAD90° to 0° to LAG90°
Z	special

Rated voltage

1	110 VAC
2	220 VAC
A	100 VAC
B	105 VAC
C	115 VAC
F	200 VAC
G	210 VAC
Z	special

Rated current

1	1 AAC
5	5 AAC
Z	special

Rated frequency

5	50 Hz
6	60 Hz

Design rank

Auxiliary power supply

1	100/110 VAC
2	200/220 VAC
3	24 VDC
4	100/110 VDC (88 to 143 V)
Z	special

Rated output

Z	special
S	±5 VDC (600 Ω or above)
L	0 to 10 mADC (1 kΩ or less)
K	0 to 5 mADC (2 kΩ or less)
J	0 to 1 mADC (10 kΩ or less)
H	4 to 20 mADC (550 Ω or less)
G	±1 mADC (10 kΩ or less)
F	0 to 100 mVDC (200 Ω or above)
E	±10 VDC (2 kΩ or above)
D	0 to 1 VDC (200 Ω or above)
C	0 to 10 VDC (2 kΩ or above)
B	0 to 5 VDC (600 Ω or above)
A	1 to 5 VDC (600 Ω or above)

In parentheses, load resistance value

■ Manufacturing range

- Input Within the above type range
- Output Within the above type range

■ Input-output relationship

The phase difference of the current with respect to the input voltage is output.

Phase angle (WS type)

Input	Output
LEAD LAG 60° to 0 to 60°	0 to 5 V 0 to 10 V
LEAD LAG 90° to 0 to 90°	0 to 1 mA 0 to 5 mA

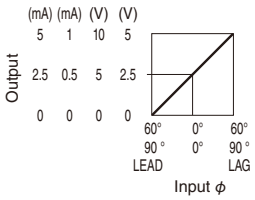

Input	Output
LEAD LAG 60° to 0 to 60°	1 to 5 V * 4 to 20 mA *
LEAD LAG 90° to 0 to 90°	

* When the input becomes 0%, the output becomes equivalent to 0° (approx. 3 V or approx. 12 mA)

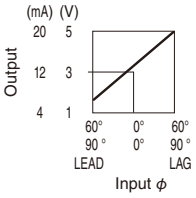

Input	Output
LEAD LAG 60° to 0 to 60°	-5 to 0 to +5 V
LEAD LAG 90° to 0 to 90°	

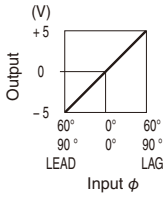

Fuji Electric FA Components & Systems Co., Ltd.
Information subject to change without notice

Three-phase four-wire V-I phase angle transducer WS4P4 Series

WS4P4 converts three-phase four-wire voltage-current phase difference to a DC voltage/current signal and isolates between input/output/auxiliary power supply/earth.

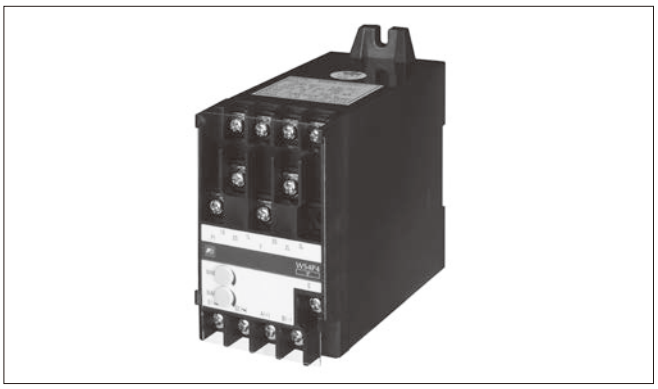

■ Features

- Input, output, auxiliary power supply, and earth are insulated from each other.
- The case uses flame retardant ABS.
- Terminal cover included as standard.
- Connection terminal uses M4 screws.

■ Specifications

Type		WS4P4
Method		Phase difference
Usage conditions		Distortion factor 5% or less Voltage: balanced (phase voltage) Positive phase order Current: unbalanced
Tolerance		± 3.0 %
Response time		1 sec or less (within ±1% of rated)
Isolation resistance		50 MΩ or above (500 VDC)
Consumption VA(W)	Measurement part	Approx. 0.5 VA current/each phase/voltage
	Auxiliary power supply	Approx. 3.0 VA (approx. 3.0 W)
Operating temperature and humidity range		-10 to +55°C 30 to 80% RH (no condensation)
Output adjustment range		± 5 %
Mass		AC power supply approx. 700 g DC power supply approx. 600 g

■ Block diagram

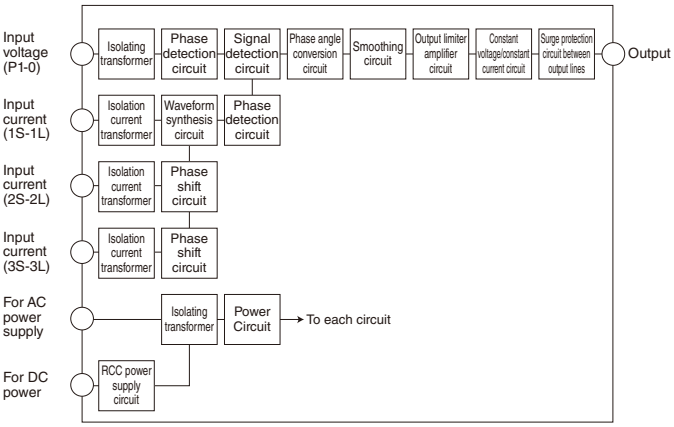

■ External dimensions/External connection diagram

Please refer to page D1-103 to D1-104.

(Note) When the input voltage is 0 V or the input current is 0 A, the output becomes almost 0°. (When auxiliary power is supplied)

■ Type (= Product Code) description

WS4P4–□□□□□□1

Input

6	LEAD 60° to 0° to LAG 60°
9	LEAD 90° to 0° to LAG 90°
Z	special

Rated voltage

Z	special
G	210/√3 VAC
F	200/√3 VAC
C	115/√3 VAC
B	105/√3 VAC
A	100/√3 VAC
2	220/√3 VAC
1	110/√3 VAC

Phase voltage

Rated current

1	1 AAC
5	5 AAC
Z	special

Rated frequency

5	50 Hz
6	60 Hz

Design rank

Auxiliary power supply

1	100/110 VAC
2	200/220 VAC
3	24 VDC
4	100/110 VDC (88 to 143 V)
Z	special

Rated output

Z	special
S	±5 VDC (600 Ω or above)
L	0 to 10 mADC (1 kΩ or less)
K	0 to 5 mADC (2 kΩ or less)
J	0 to 1 mADC (10 kΩ or less)
H	4 to 20 mADC (550 Ω or less)
G	±1 mADC (10 kΩ or less)
F	0 to 100 mVDC (200 Ω or above)
E	±10 VDC (2 kΩ or above)
D	0 to 1 VDC (200 Ω or above)
C	0 to 10 VDC (2 kΩ or above)
B	0 to 5 VDC (600 Ω or above)
A	1 to 5 VDC (600 Ω or above)

In parentheses, load resistance value

■ Manufacturing range

- Input Within the above type range
- Output Within the above type range

■ Input-output relationship

The phase difference of the current with respect to the input voltage is output.

Phase angle (WS type)

Input	Output
LEAD LAG 60° to 0 to 60°	0 to 5 V 0 to 10 V
LEAD LAG 90° to 0 to 90°	0 to 1 mA 0 to 5 mA

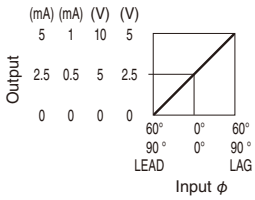

Input	Output
LEAD LAG 60° to 0 to 60°	1 to 5 V * 4 to 20 mA *
LEAD LAG 90° to 0 to 90°	

* When the input becomes 0%, the output becomes equivalent to 0° (approx. 3 V or approx. 12 mA)

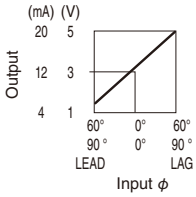

Input	Output
LEAD LAG 60° to 0 to 60°	-5 to 0 to +5 V
LEAD LAG 90° to 0 to 90°	

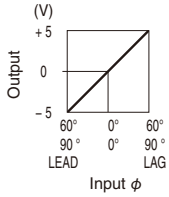

Transducers
Single-phase two-wire power factor transducer WS4C1 Series

WS4C1 converts single-phase two-wire circuit power factor to a DC voltage/current signal and isolates between input/output/auxiliary power supply/earth.

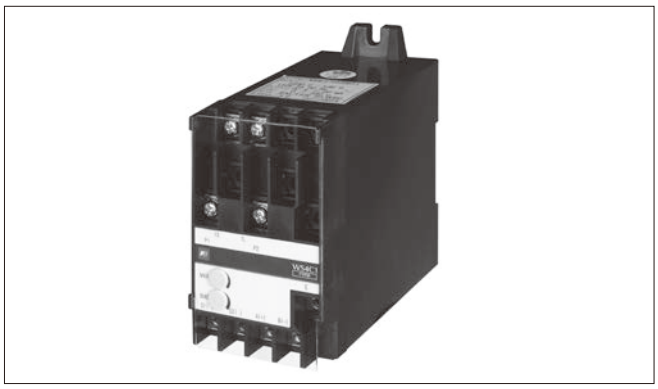

■ Features

- Input, output, auxiliary power supply, and earth are insulated from each other.
- The case uses flame retardant ABS.
- Terminal cover included as standard.
- Connection terminal uses M4 screws.

■ Specifications

Type		WS4C1
Method		Phase difference conversion method
Usage conditions		Distortion factor 5% or less
Tolerance		± 3.0 %
Response time		1 sec or less (within ±1% of rated)
Isolation resistance		50 MΩ or above (500 VDC)
Consumption VA(W)	Measurement part	Approx. 0.5 VA current/each phase/voltage
	Auxiliary power supply	Approx. 3.0 VA (approx. 3.0 W)
Operating temperature and humidity range		-10 to +55°C 30 to 80% RH (no condensation)
Output adjustment range		± 5 %
Mass		AC power supply approx. 700 g DC power supply approx. 600 g

■ Block diagram

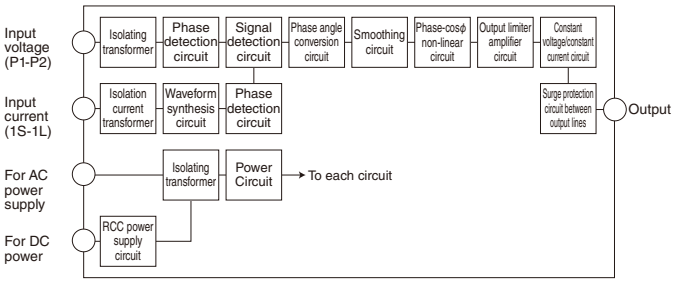

■ External dimensions/External connection diagram

Please refer to page D1-103 to D1-104.

(Note) When the input voltage is 0 V or the input current is 0 A, the output becomes almost power factor 1. (When auxiliary power is supplied)

■ Type (= Product Code) description

WS4C1–□□□□□□1

Input

0	LEAD0 to 1 to LAG0
5	LEAD0.5 to 1 to LAG0.5
Z	special

Rated voltage

1	110 VAC
2	220 VAC
A	100 VAC
B	105 VAC
C	115 VAC
F	200 VAC
G	210 VAC
Z	special

Rated current

1	1 AAC
5	5 AAC
Z	special

Rated frequency

5	50 Hz
6	60 Hz

Design rank

Auxiliary power supply

1	100/110 VAC
2	200/220 VAC
3	24 VDC
4	100/110 VDC (88 to 143 V)
Z	special

Rated output

Z	special
S	±5 VDC (600 Ω or above)
L	0 to 10 mADC (1 kΩ or less)
K	0 to 5 mADC (2 kΩ or less)
J	0 to 1 mADC (10 kΩ or less)
H	4 to 20 mADC (550 Ω or less)
G	±1 mADC (10 kΩ or less)
F	0 to 100 mVDC (200 Ω or above)
E	±10 VDC (2 kΩ or above)
D	0 to 1 VDC (200 Ω or above)
C	0 to 10 VDC (2 kΩ or above)
B	0 to 5 VDC (600 Ω or above)
A	1 to 5 VDC (600 Ω or above)

In parentheses, load resistance value

■ Manufacturing range

- Input Within the above type range
- Output Within the above type range

■ Input-output relationship

Power factor (WS type)

Input	Output
LEAD LAG 0.5 to 1 to 0.5	0 to 5 V 0 to 10 V
LEAD LAG 0 to 1 to 0	0 to 1 mA 0 to 5 mA

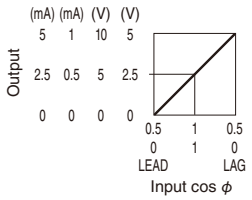

Input	Output
LEAD LAG 0.5 to 1 to 0.5	1 to 5 V * 4 to 20 mA *
LEAD LAG 0 to 1 to 0	

* When the input becomes 0%, the output becomes power factor 1 equivalent (approx. 3 V or approx. 12 mA)

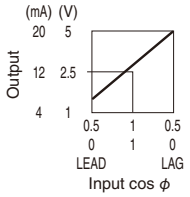

Input	Output
LEAD LAG 0.5 to 1 to 0.5	-5 to 0 to +5 V
LEAD LAG 0 to 1 to 0	

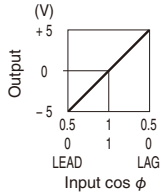

Fuji Electric FA Components & Systems Co., Ltd.
Information subject to change without notice

Three-phase three-wire power factor transducer WS4C3 Series

WS4C3 converts three-phase three-wire circuit power factor to a DC voltage/current signal and isolates between input/output/auxiliary power supply/earth.

■ Features

- Input, output, auxiliary power supply, and earth are insulated from each other.
- The case uses flame retardant ABS.
- Terminal cover included as standard.
- Connection terminal uses M4 screws.

■ Specifications

Type		WS4C3
Method		Phase difference conversion method
Usage conditions		Distortion factor 5% or less Voltage: balanced Positive phase order Current: unbalanced
Tolerance		± 3.0 %
Response time		1 sec or less (within ±1% of rated)
Isolation resistance		50 MΩ or above (500 VDC)
Consumption VA(W)	Measurement part	Approx. 0.5 VA current/each phase/voltage
	Auxiliary power supply	Approx. 3.0 VA (approx. 3.0 W)
Operating temperature and humidity range		-10 to +55°C 30 to 80% RH (no condensation)
Output adjustment range		± 5 %
Mass		AC power supply approx. 700 g DC power supply approx. 600 g

■ Type (= Product Code) description

WS4C3–□□□□□□1

Input

0	LEAD0 to 1 to LAG0
5	LEAD0.5 to 1 to LAG0.5
Z	special

Rated voltage

1	110 VAC
2	220 VAC
A	100 VAC
B	105 VAC
C	115 VAC
F	200 VAC
G	210 VAC
Z	special

Rated current

1	1 AAC
5	5 AAC
Z	special

Rated frequency

5	50 Hz
6	60 Hz

Design rank

Auxiliary power supply

1	100/110 VAC
2	200/220 VAC
3	24 VDC
4	100/110 VDC (88 to 143 V)
Z	special

Rated output

Z	special
S	±5 VDC (600 Ω or above)
L	0 to 10 mADC (1 kΩ or less)
K	0 to 5 mADC (2 kΩ or less)
J	0 to 1 mADC (10 kΩ or less)
H	4 to 20 mADC (550 Ω or less)
G	±1 mADC (10 kΩ or less)
F	0 to 100 mVDC (200 Ω or above)
E	±10 VDC (2 kΩ or above)
D	0 to 1 VDC (200 Ω or above)
C	0 to 10 VDC (2 kΩ or above)
B	0 to 5 VDC (600 Ω or above)
A	1 to 5 VDC (600 Ω or above)

In parentheses, load resistance value

■ Block diagram

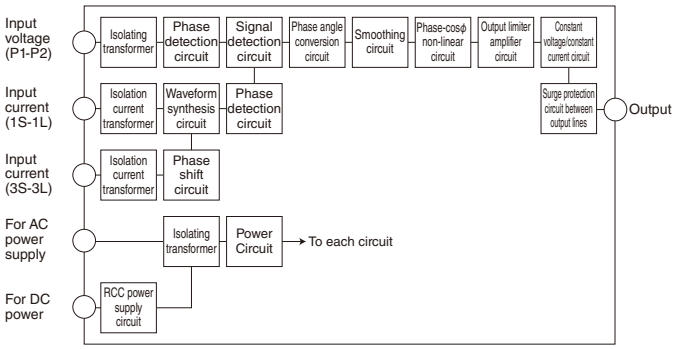

■ Manufacturing range

- Input Within the above type range
- Output Within the above type range

■ External dimensions/External connection diagram

Please refer to page D1-103 to D1-104.

(Note) When the input voltage is 0 V or the input current is 0 A, the output becomes almost power factor 1. (When auxiliary power is supplied)

■ Input-output relationship

Power factor (WS type)

Input	Output
LEAD LAG 0.5 to 1 to 0.5	0 to 5 V 0 to 10 V
LEAD LAG 0 to 1 to 0	0 to 1 mA 0 to 5 mA

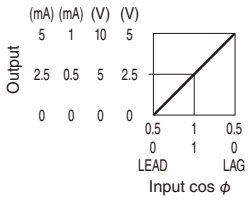

Input	Output
LEAD LAG 0.5 to 1 to 0.5	1 to 5 V * 4 to 20 mA *
LEAD LAG 0 to 1 to 0	

* When the input becomes 0%, the output becomes power factor 1 equivalent (approx. 3 V or approx. 12 mA)

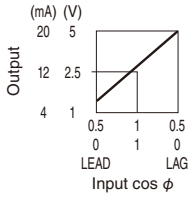

Input	Output
LEAD LAG 0.5 to 1 to 0.5	-5 to 0 to +5 V
LEAD LAG 0 to 1 to 0	

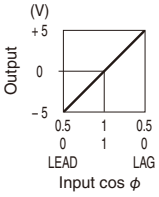

Transducers
Three-phase four-wire power factor transducer WS4C4 Series

WS4C4 converts three-phase four-wire circuit power factor to a DC voltage/current signal and isolates between input/output/auxiliary power supply/earth.

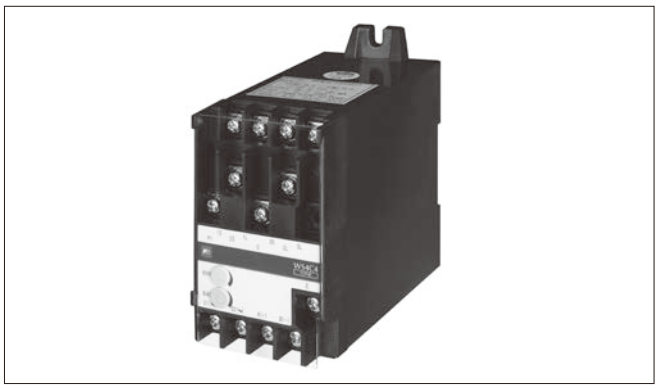

■ Features

- Input, output, auxiliary power supply, and earth are insulated from each other.
- The case uses flame retardant ABS.
- Terminal cover included as standard.
- Connection terminal uses M4 screws.

■ Specifications

Type		WS4C4
Method		Phase difference conversion method
Usage conditions		Distortion factor 5% or less Voltage: balanced (phase voltage) Positive phase order Current: unbalanced
Tolerance		± 3.0 %
Response time		1 sec or less (within ±1% of rated)
Isolation resistance		50 MΩ or above (500 VDC)
Consumption VA(W)	Measurement part	Approx. 0.5 VA current/each phase/voltage
	Auxiliary power supply	Approx. 3.0 VA (approx. 3.0 W)
Operating temperature and humidity range		-10 to +55°C 30 to 80% RH (no condensation)
Output adjustment range		± 5 %
Mass		AC power supply approx. 700 g DC power supply approx. 600 g

■ Type (= Product Code) description

WS4C4–□□□□□□1

Input

0	LEAD0 to 1 to LAG0
5	LEAD0.5 to 1 to LAG0.5
Z	special

Rated voltage

Z	special
G	210/√3 VAC
F	200/√3 VAC
C	115/√3 VAC
B	105/√3 VAC
A	100/√3 VAC
2	220/√3 VAC
1	110/√3 VAC

Phase voltage

Rated current

1	1 AAC
5	5 AAC
Z	special

Rated frequency

5	50 Hz
6	60 Hz

Design rank

Auxiliary power supply

1	100/110 VAC
2	200/220 VAC
3	24 VDC
4	100/110 VDC (88 to 143 V)
Z	special

Rated output

Z	special
S	±5 VDC (600 Ω or above)
L	0 to 10 mADC (1 kΩ or less)
K	0 to 5 mADC (2 kΩ or less)
J	0 to 1 mADC (10 kΩ or less)
H	4 to 20 mADC (550 Ω or less)
G	±1 mADC (10 kΩ or less)
F	0 to 100 mVDC (200 Ω or above)
E	±10 VDC (2 kΩ or above)
D	0 to 1 VDC (200 Ω or above)
C	0 to 10 VDC (2 kΩ or above)
B	0 to 5 VDC (600 Ω or above)
A	1 to 5 VDC (600 Ω or above)

In parentheses, load resistance value

■ Block diagram

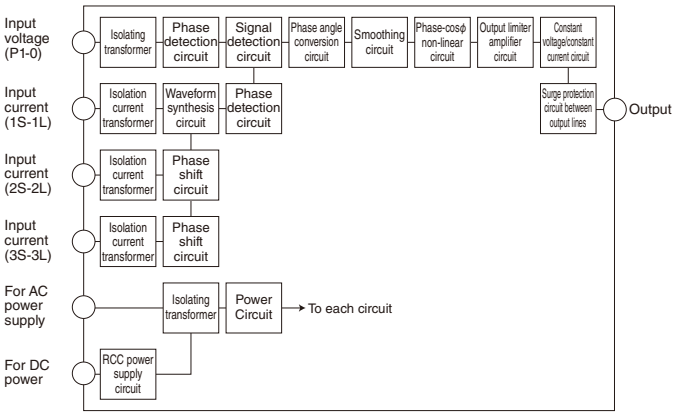

■ Manufacturing range

- Input Within the above type range
- Output Within the above type range

■ External dimensions/External connection diagram

Please refer to page D1-103 to D1-104.

(Note) When the input voltage is 0 V or the input current is 0 A, the output becomes almost power factor 1. (When auxiliary power is supplied)

■ Input-output relationship

Power factor (WS type)

Input	Output
LEAD LAG 0.5 to 1 to 0.5	0 to 5 V 0 to 10 V
LEAD LAG 0 to 1 to 0	0 to 1 mA 0 to 5 mA

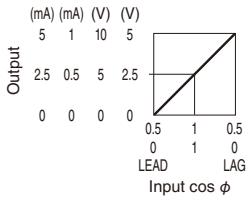

Input	Output
LEAD LAG 0.5 to 1 to 0.5	1 to 5 V * 4 to 20 mA *
LEAD LAG 0 to 1 to 0	

* When the input becomes 0%, the output becomes power factor 1 equivalent (approx. 3 V or approx. 12 mA)

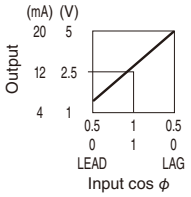

Input	Output
LEAD LAG 0.5 to 1 to 0.5	-5 to 0 to +5 V
LEAD LAG 0 to 1 to 0	

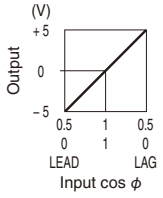

Fuji Electric FA Components & Systems Co., Ltd.
Information subject to change without notice

WS4F1 converts frequency to a current/voltage signal and isolates between input/output/auxiliary power supply/earth.

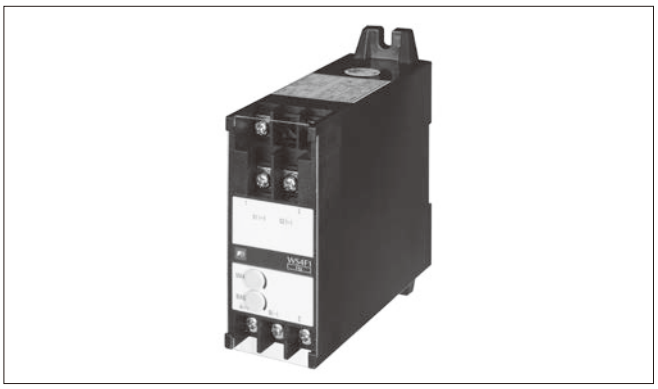

■ Features

- Input, output, auxiliary power supply, and earth are insulated from each other.
- The case uses flame retardant ABS.
- Terminal cover included as standard.
- Connection terminal uses M4 screws.

■ Specifications

Type		WS4F1
Method		Pulse charging method
Usage conditions		Waveform: 3rd harmonic 15%
Tolerance		± 0.5 %
Response time		1 sec or less (within ±1% of rated)
Isolation resistance		50 MΩ or above (500 VDC)
Consumption VA(W)	Measurement part	Approx. 1.0 VA
	Auxiliary power supply	Approx. 3.0 VA (approx. 3.0 W)
Operating temperature and humidity range		-10 to +55°C 30 to 80% RH (no condensation)
Output adjustment range		± 5 %
Mass		AC power supply approx. 500 g DC power supply approx. 400 g

■ Block diagram

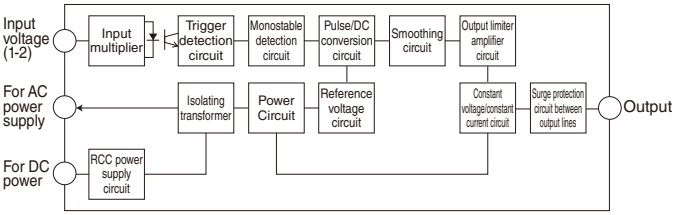

■ External dimensions/External connection diagram

Please refer to page D1-103 to D1-104.

(Note) When the input voltage is 0 V, the output is approx. -0.6 V for B (0 to 5 V) and approx. 2 mA for H (4 to 20 mA). (When auxiliary power is supplied)

■ Type (= Product Code) description

WS4F1–□□□□1

Input

4	45 to 65 Hz
5	45 to 55 Hz
6	55 to 65 Hz
Z	special

Rated voltage

1	110 VAC
2	220 VAC
A	100 VAC
B	105 VAC
C	115 VAC
F	200 VAC
G	210 VAC
Z	special

Rated output

Z	special
L	0 to 10 mADC (1 kΩ or less)
K	0 to 5 mADC (2 kΩ or less)
J	0 to 1 mADC (10 kΩ or less)
H	4 to 20 mADC (550 Ω or less)
F	0 to 100 mVDC (200 Ω or above)
D	0 to 1 VDC (200 Ω or above)
C	0 to 10 VDC (2 kΩ or above)
B	0 to 5 VDC (600 Ω or above)
A	1 to 5 VDC (600 Ω or above)

In parentheses, load resistance value

Design rank

Auxiliary power supply

1	100/110 VAC
2	200/220 VAC
3	24 VDC
4	100/110 VDC (88 to 143 V)
Z	special

■ Manufacturing range

- Input 0 to 50 V…0 to 240 V
- Frequency 45 Hz to 1 kHz
- Output 0 to 0.1 mA…0 to 20 mA

■ Input-output relationship

Frequency (WS type)

Input	Output
45 to 55 Hz	0 to 5 V
55 to 65 Hz	0 to 10 V
	0 to 1 mA
	0 to 5 mA

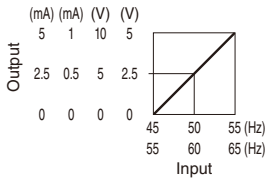

Input	Output
45 to 55 Hz	1 to 5 V *
55 to 65 Hz	4 to 20 mA *

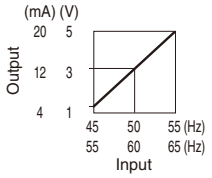

* When the input becomes 0%, the output will be approx. 2 mA in power.

Transducers
DC isolation transducer (isolator) WS4DC Series

WS4DC amplifies various DC signals and converts them into a unified signal between systems.
Since it isolates between input/output/auxiliary power supply/earth, it is effective for delivering isolated signals such as power measurement systems, cutting noise, preventing wraparound in control circuits, direct sending of output signals to distant places, etc.

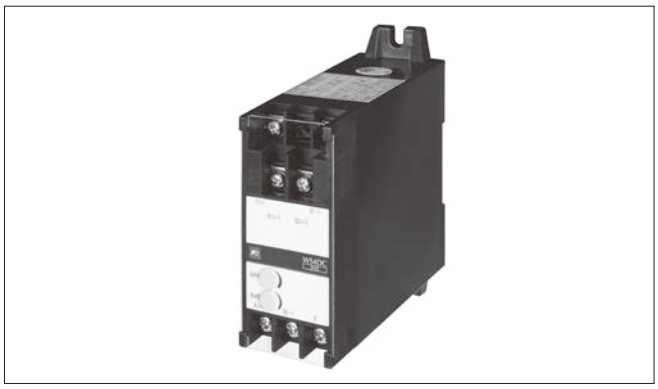

■ Features

- Input, output, auxiliary power supply, and earth are insulated from each other.
- The case uses flame retardant ABS.
- Terminal cover included as standard.
- Connection terminal uses M4 screws.

■ Specifications

Type		WS4DC
Method		Photocoupler isolation
Tolerance		± 0.25 %
Response time		0.2 sec or less (within ±1% of rated) *0.06 sec or less can also be manufactured
Isolation resistance		50 MΩ or above (500 VDC)
Consumption VA(W)	Auxiliary power supply	Approx. 3.0 VA (approx. 3.0 W)
Operating temperature and humidity range		-10 to +55°C 30 to 80% RH (no condensation)
Output adjustment range		± 5 %
Mass		AC power supply approx. 500 g DC power supply approx. 300 g

■ Block diagram

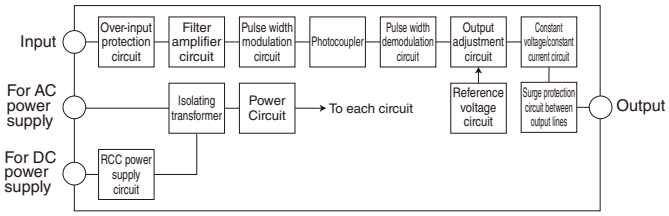

■ External dimensions/External connection diagram

Please refer to page D1-103 to D1-104.

■ Regarding special filters

If the input waveform contains the ripple component of the single-phase AC full-wave rectified waveform (50/60 Hz), it is necessary to specify a special filter.
Please specify "with 50/60 Hz full-wave rectification filter" at the end of the type.

■ Input-output relationship

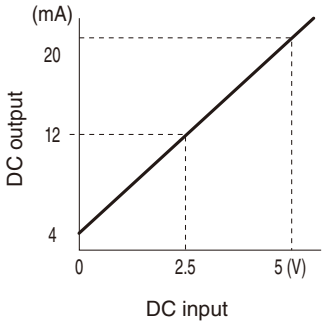

■ Type (= Product Code) description

WS4DC–□□□□1

Input signal

11	0 to 100 mVDC
12	0 to 1 VDC
13	0 to 5 VDC
14	0 to 10 VDC
15	1 to 5 VDC
16	4 to 20 mADC
23	0 to 50 mVDC
24	±10 VDC
27	0 to 1 mADC
42	±5 VDC
50	±50 mVDC
51	±60 mVDC
52	±100 mVDC
53	±1 VDC
54	0 to 5 mADC
55	0 to 10 mADC
56	0 to 16 mADC
57	±1 mADC
58	±5 mADC
59	±10 mADC
60	0 to 10 mVDC
61	±10 mVDC
62	0 to 10 μADC
63	0 to 100 μADC
64	±10 μADC
65	±100 μADC
66	±500 μADC
ZZ	special

Design rank

Auxiliary power supply

1	100/110 VAC
2	200/220 VAC
3	24/48 VDC (20 to 56 VDC)
4	100/110 VDC (88 to 143 V)
Z	special

Output signal

Z	special
R	1 to 5 mADC (2 kΩ or less)
M	0 to 16 mADC (600 Ω or less)
L	0 to 10 mADC (1 kΩ or less)
K	0 to 5 mADC (2 kΩ or less)
J	0 to 1 mADC (10 kΩ or less)
H	4 to 20 mADC (550 Ω or less)
F	0 to 100 mVDC (200 Ω or above)
D	0 to 1 VDC (200 Ω or above)
C	0 to 10 VDC (2 kΩ or above)
B	0 to 5 VDC (600 Ω or above)
A	1 to 5 VDC (600 Ω or above)

In parentheses, load resistance value

■ Manufacturing range

- Input 0 to 10 mV…0 to 600 V
  0 to 10 μA ... 0 to 100 mA
- Output ±10 V, ±20 mA (please ask)

(Note 1) If the input is less than 50 mV or less than 500 μA, the tolerance is ±0.5%.
(Note 2) Input 10 μA is less than the 15 V circuit voltage.
(Note 3) There is no problem even if the current output terminal is always open. Approx. 15 V between output terminals.

External connection diagram

WS4A1, A2

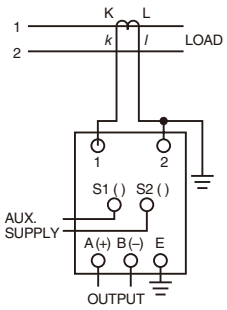

WS4V1, V2, F1

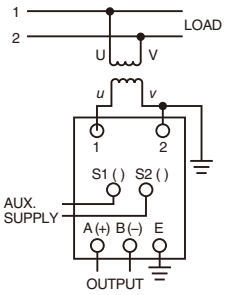

WS4W1

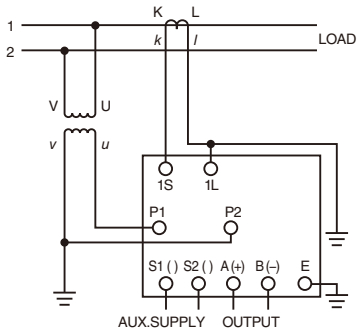

WS4W2, W3, R3

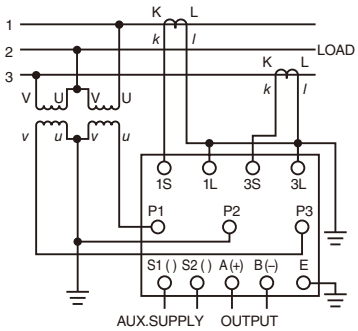

WS4W4

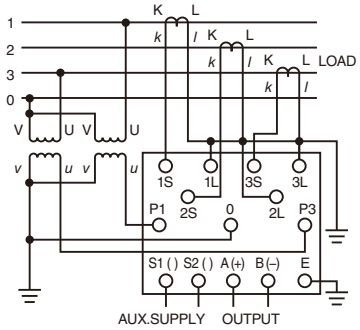

WS4R4

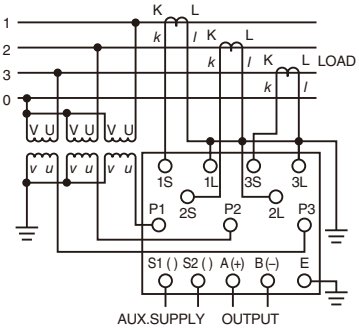

WS4VV

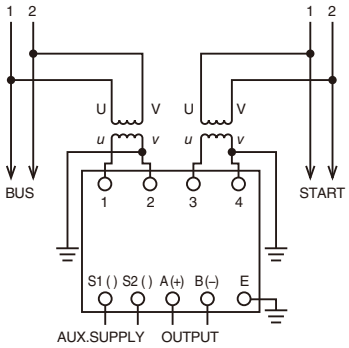

WS4P1, C1

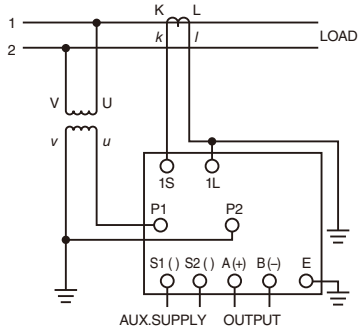

WS4P3, C3

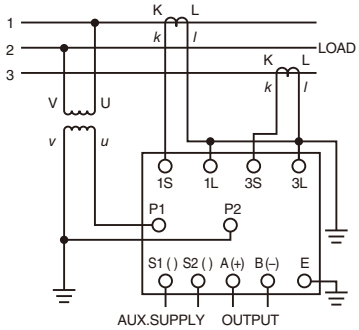

WS4P4, C4

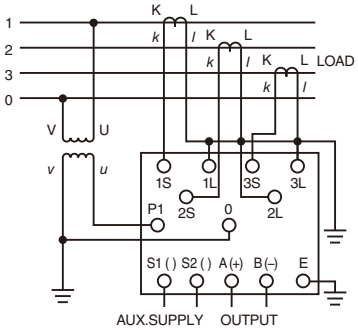

WS4DC

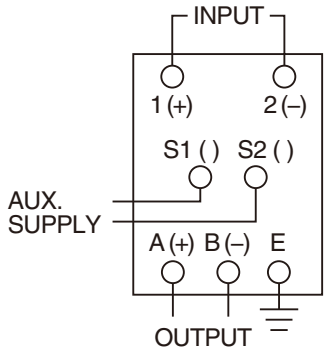

(Note) For AC power supply, it is S1(~), S2(~).

D1

Transducers
External connection diagram WS4 Series

■ **External dimensions [unit: mm]**

WS4V1, V2, A1, A2, F1, DC

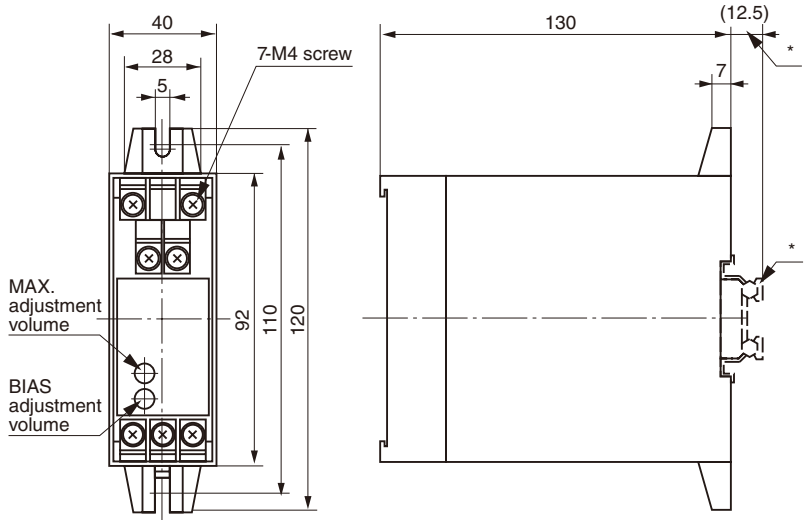

WS4W1, W2, W3, W4, R3, R4, VV, P1, P3, P4, C1, C3, C4

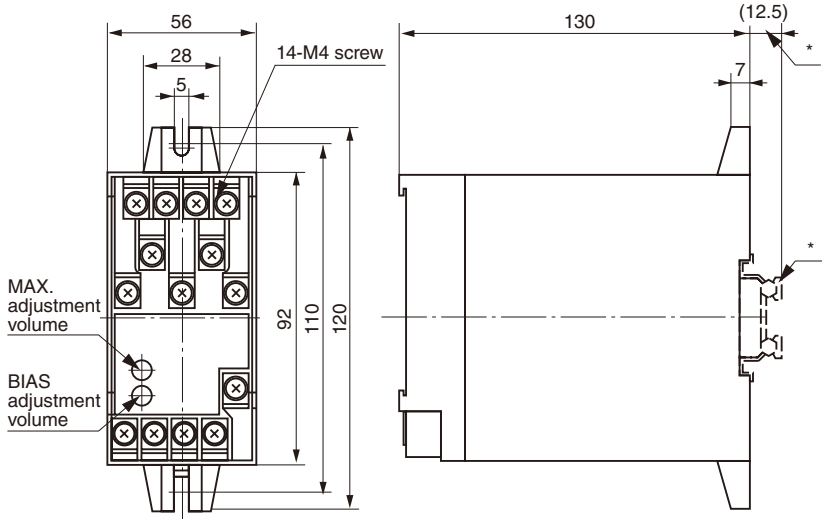

* For rail, use IEC 35 mm rail (reinforced type). (Recommended product) Fuji Electric FA Components & Systems Co., Ltd. TH35-15AL

Features

- Conforms to international standards IEC60688: 2012 (transducers) and IEC62053: 2003 (electricity metering equipment).
- Compatible with a wide range of input circuits, and can be switched by setting the phase line method, rated voltage, or rated current. Also, 440 V voltage can be connected directly.
- Supports a variety of output formats, with analog output × 10 circuits, pulse output × 2 circuits, and RS485 communication output × 1 circuit as standard on one unit.
- Supports setting by PC software, and by connecting the micro-USB terminal on the front of the unit to a PC, it is possible to write and read the setting values using dedicated software. (User registration required)
- Equipped with a display function, it is possible to visually recognize the setting changes and the display of measurement items clearly with the high contrast organic EL panel.
- Loop test/miswiring judgment support functions are provided and it is possible to check the wiring after installation by test output using front side operation on the device.
  (The output signal is varied by 25% at a time and it can be determined whether the wiring is correct.)
  The phase angle of voltage and current are displayed on the front panel, and judgment of miswiring place is supported.

* Software download requires registration at the Fuji Electric technology related documentation website "Fe Library".

Type (= Product Code) description

WS5MT – □ □

Auxiliary power supply

8	20 to 57 VDC
0	80 to 264 VAC/DC For both AC and DC

Output signal

B	0 to 5 VDC (600Ω or more)	J	0 to 1 mADC (10kΩ or less)
C	0 to 10 VDC (2kΩ or more)	H	4 to 20 mADC (550Ω or less)
A	1 to 5 VDC (600Ω or more)	G	±1 mADC (10kΩ or less)
S	±5 VDC (600Ω or more)	Z	Special specification

Specifications

Item		Specifications	Remarks
Input circuit		Three-phase four-wire (2VT3CT, 3VT3CT), three-phase three-wire (2VT2CT, 2VT3CT), single-phase three-wire, single-phase two-wire	Switch by settings
Input	Rated voltage	Three-phase three-wire, single-phase two-wire: 110 VAC, 220 VAC, 440 VAC common 50/60 Hz	Switch by settings
		Single-phase three-wire: 100 to 200 VAC, 200 to 400 VAC 50/60 Hz	Switch by settings
		Three-phase four-wire: 110/√3 VAC, 220/√3 VAC, 440/√3 VAC, 50/60 Hz	Switch by settings
	Rated current	5 AAC, 1 A common 50/60 Hz	Switch by settings
	External reset	Maximum demand value reset	The input rating is the same as the auxiliary power supply
Output	Analog output	10 points	–
	Pulse output	2 point optical MOS-FET relay	–
	Communication output	MODBUS RTU, Protocol A (RS-485)	Switch by settings
Auxiliary power supply	Power supply range, power consumption	80 to 264 VAC (rated voltage: 100/110 VAC 15 VA, 200/220 VAC 18 VA) 80 to 264 VDC (Rated voltage: 100/110 VDC 9 W, 200/220 VDC 10 W) for both AC and DC	Designate either
		20 to 57 VDC (rated voltage: 24 VDC 11 W, 48 VDC 12 W)	
	Inrush current (time constant)	110 VAC: 5.5 A or less, 220 VAC: 10.9 A or less, 110 VDC: 3.9 A or less, 220 VDC: 7.7 A or less (approx. 5 ms)	Designate either
		24 VDC: 6.3 A or less, 48 VDC: 12.6 A or less (approx. 8 ms)	

Measurement Items	Class index		Measurable items (1, 2, 3, N are phases, Σ is total)				Remarks
	5 A rating	1 A rating	Three-phase four-wire	Three-phase three-wire	Single-phase three-wire	Single-phase two-wire	
Current, power flow current	0.2	0.5	I1, I2, I3, IN, Iavg	I1, I2, I3, Iavg	I1, I3, IN	I	Power flow current is Iavg, no IN
Demand current	0.2	0.5	Id1, Id2, Id3, IdN, Idavg	Id1, Id2, Id3, Idavg	Id1, Id3, IdN	Id	–
Maximum demand current	0.2	0.5	Idmax1, Idmax2, Idmax3, IdmaxN, Idmaxavg	Idmax1, Idmax2, Idmax3, Idmaxvg	Idmax1, Idmax3 IdmaxN	Idmax	–
Voltage	0.2	0.2	U12, U23, U31, ULLavg U1N, U2N, U3N, ULNavg	U12, U23, U31, ULLavg	U12, U3N, U13	U	–
Power	0.3	0.5	ΣP, P1, P2, P3	ΣP	ΣP	P	–
Demand power	0.3	0.5	ΣPd, Pd1, Pd2, Pd3	ΣPd	ΣPd	Pd	–
Maximum demand power	0.3	0.5	ΣPdmax, Pdmax1, Pdmax2, Pdmax	Σpdmax	Σpdmax	Pdmax	–
Reactive power, power flow reactive power, (2 quadrants, 4 quadrants)	0.3	0.5	ΣQ, Q1, Q2, Q3	ΣQ	ΣQ	Q	Select the calculation method from Q = UI sin ϕ, Q = √ (S^2 - P^2) or Q = $\sqrt{S^2-P^2}$
Apparent power	0.3	0.5	ΣS, S1, S2, S3	ΣS	ΣS	S	Three-phase three-wire is a voltage equilibrium condition
Power factor, power flow power factor (2 quadrants, 4 quadrants)	1	1.5	ΣPF, PF1, PF2, PF3	ΣPF	ΣPF	PF	–
Frequency	0.2	0.2	f	f	f	f	–
RMS value of fundamental wave	Voltage: 1 Current: 1	Voltage: 1 Current: 2	HU1N, HU2N, HU3N, HI1, HI2, HI3 (HU2N is at 3VT3CT)	HU12, HU23, HI1, HI2, HI3 (HI2 is at 2VT3CT)	HU1N, HU3N, HI1, HI3	HU, HI	–
Nth harmonic RMS value							n=3 to 15th order (odd orders only)
5th harmonic conversion RMS value							–
Distortion factor	Voltage: 2 Current: 2	Voltage: 2 Current: 2.5					–
nth harmonic content rate							n=3 to 15th order (odd orders only)
5th harmonic conversion content rate							–
Electric energy	1	2	Power receiving/power transmission				–
Reactive electric energy	2	2	Power receiving (LAG, LEAD)/power transmission (LAG, LEAD)				–

Setting value data can be managed by PC loader (WS5PD-1).

By connecting the USB terminal on the front of the transducer to your PC, you can edit, write, read and save setting value data.

■ Operation environment

Item	Request content
PC	PC-AT compatible device
Supported OS	Windows® 7 (32-bit/64-bit), Windows® 8.1 (32-bit/64-bit)
CPU	32-bit processor: 1 GHz or above 64-bit processor: 1.6 GHz or above
Required memory	32-bit: 1 GB or above 64-bit: 2 GB or above
HDD	100 MB or above free capacity [Free capacity of 300 MB or above if Microsoft .NET Framework 4 Client Profile (32-bit version) or Microsoft .NET Framework 4.5 (64-bit version) is not installed]
Display	Resolution 1024×768 or above, High Color (65536 colors) or above
Interface	USB2.0
Communication port	Free USB(A) port × 1
Others	Mouse, keyboard

■ System configuration and connection method

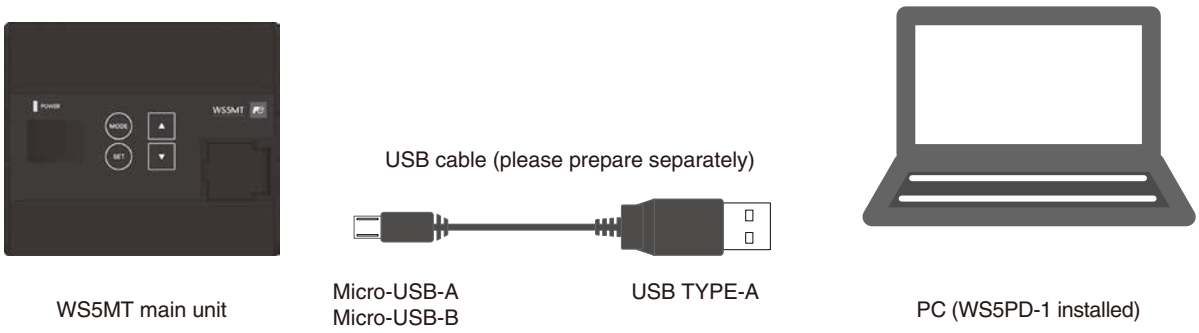

WS5MT main unit and USB cable are not necessary when only editing, saving, and outputting CSV files for setting value data.

Refer to the system configuration diagram and follow the steps below to connect the PC and the WS5MT.

(1) Open the USB cover of the WS5MT main unit and insert the Micro-USB connector.

CAUTION: If you insert the Micro-USB in the wrong orientation, the USB terminal may be damaged.
Check the orientation of the USB connector and insert with the protruding part facing upward.

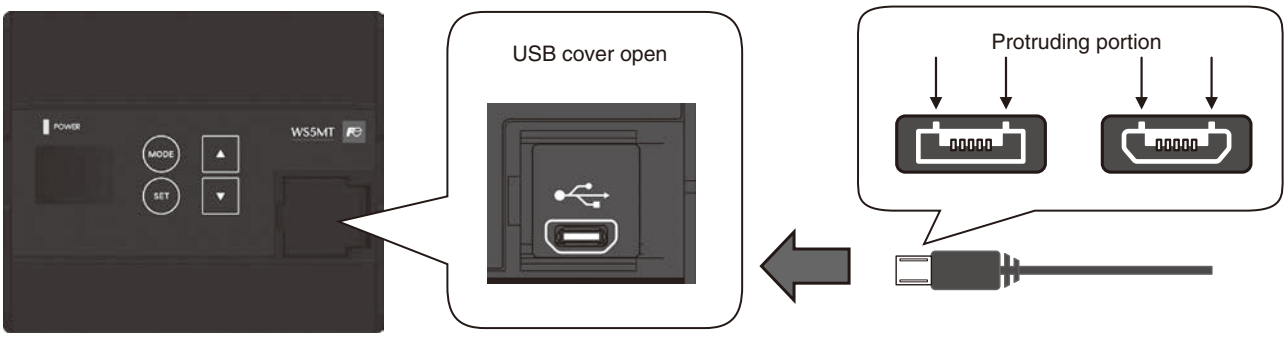

(2) Insert the USB Type-A connector into the USB terminal of the PC.
(3) When connected properly, the USB mark will light on the display screen (upper right) of WS5MT.
(4) Activate the software (WS5PD-1) and read and write the setting values.

■ Installation method

This software has a digital signature. In order to confirm its validity, the PC must be connected to the Internet only during installation.

• Application

(1) Extract the compressed file (zip) downloaded from our website.
(2) Execute "setup.exe" in the following folder according to the specifications of Windows you are using, and start the installer.
[32-bit version]: x86 folder
[64-bit version]: x64 folder
(3) The setup wizard of WS5PD-1 starts. Follow the instructions on the screen to install WS5PD-1.
(4) After installation is complete, click [Close] in the installer and exit the installer.

• Microsoft .NET Framework 4.5

If Microsoft .NET Framework 4.5 is not installed, the software will not work properly.
In this case, execute the installation as follows.

(1) Access the Microsoft Download Center's Microsoft .NET Framework 4.5 page (https://www.microsoft.com/en-US/download/details.aspx?id=30653).
(2) Click "Download" and download the file.
(3) When the download is complete, start the executable file (dotNetFx45_Full_setup.exe).
(4) Install Microsoft .NET Framework 4.5 according to the instructions of the installer.

• USB driver

Execute the following procedure with administrator authority.
Execute WS5PD-1_install.bat in the driver folder in the folder where you installed WS5PD-1 ([32-bit version] C:\Program Files\Fuji Electric\WS5PD-1, [64-bit version] C:\Program Files(x86)\Fuji Electric\WS5PD-1).
(From the mouse right-click menu, select Execute as Administrator.)
If you have already installed it, this step is unnecessary.

> Note: Before installing, please close other applications or resident software. Especially if antivirus software such as Trend Micro TITANIUM is running, installation may fail.

■ Uninstallation method

If you want to delete WS5PD-1 from the HDD, follow the steps below to uninstall it. (1)

(1) Select [Control Panel] - [Programs] - [Add/Remove Programs].
(2) Select [WS5PD-1] and click [Uninstall].
(3) Follow the on-screen instructions to uninstall.

Note (1) Before uninstalling, back up the data saved in the installation folder.

■ Installation notes

When installing, there are two types, 32-bit version and 64-bit version. Please confirm your computer specifications environment when installing.

Example of malfunction) 32-bit version was installed in a 64-bit Windows PC environment.

In the case of the above example, the application may not work. In this case, uninstall the application using the uninstallation method. Then reinstall.

■ How to check the specifications of your PC

Windows 8

(1) Swipe from the right edge of the screen and tap Search.
If using the mouse, point to the lower right corner of the screen and click Search.
(2) Enter "System" in the search box and tap or click settings.
(3) Tap or click "System".
(4) In the case of a 32-bit system, "32-bit operating system" is displayed, and in the case of a 64-bit system, "64-bit operating system" is displayed.

Windows 7

(1) Click the start button and enter "System" in the search box.
(2) Click "System" in the search results.
(3) In the case of a 32-bit system, "32-bit operating system" is displayed, and in the case of a 64-bit system, "64-bit operating system" is displayed.

■ Pulse output/Communication output specification

Pulse output	Number of output points	2 points				
	Elements that can be output	Electric energy (power received/power transmitted), reactive electric energy (power received LAG/power received LEAD/power transmitted LAG/power transmitted LEAD)				
	Output method	Optical MOS-FET relay 1a contact				
	Contact capacity	125 VAC/DC 70 mA (resistance load, inductive load)				
	Pulse width	250±10 ms (output pulse width is 100 to 130 ms when the output pulse period speed at rated power is 2 pulses/sec or more, depending on the VT ratio, CT ratio, and contact point of the output pulse unit)				
	The output pulse unit can be set within the following range: · Three-phase three-wire, three-phase four-wire : Full-load power (kW, kvar) = $\sqrt{3}$ × rated voltage (V) × rated current (A) × 10^{-3} · Single-phase three-wire : Full-load power (kW, kvar) = 2 × rated voltage (V) × rated current (A) × 10^{-3} · Single-phase two-wire : Full-load power (kW, kvar) = rated voltage (V) × rated current (A) × 10^{-3}					
	Full-load power (kW, kvar)		Output pulse unit kWh (kvarh)/pulse			
		Less than 1	0.1	0.01	0.001	0.0001
	1 or above	Less than 10	1	0.1	0.01	0.001
	10 or above	Less than 100	10	1	0.1	0.01
	100 or above	Less than 1,000	100	10	1	0.1
	1,000 or above	Less than 10,000	1,000	100	10	1
	10,000 or above	Less than 100,000	10,000	1,000	100	10
	100,000 or above	Less than 1,000,000	100,000	10,000	1,000	100
	1,000,000 or above	Less than 10,000,000	1,000,000	100,000	10,000	1,000
	10,000,000 or above	Less than 100,000,000	10,000,000	1,000,000	100,000	10,000
Communication output	Number of output points	1 point				
	Communication method	RS-485 half duplex 2 wire start-stop synchronous system				
	Protocol	MODBUS RTU mode (factory setting)		Protocol A (setting switching)		
	Transmission speed	4800/9600/19200/38400 bps		2400/4800/9600/19200 bps		
	Transmission code	NRZ		NRZ		
	Start bit	1-bit		1-bit		
	Data length	8-bit		7-bit/8-bit		
	Parity	None/even numbers/odd numbers		None/even numbers/odd numbers		
	Stop bit	1-bit/2-bit		1-bit/2-bit		
	Transmission code	Binary		ASCII code		
	Cable length	1000 m (total length)		1000 m (total length)		
	Address	1 to 247 (maximum number of connected units is 31)		1 to 254 (maximum number of connected units is 31)		
	Error detection	CRC-16 ($X^{16} + X^{15} + X^2 + 1$)		Checksum		
	Terminating resistor	External to terminal 1/2 W 100 Ω (included in product)				

D1

■ External dimensions (unit: mm) Mass: approx. 700 g

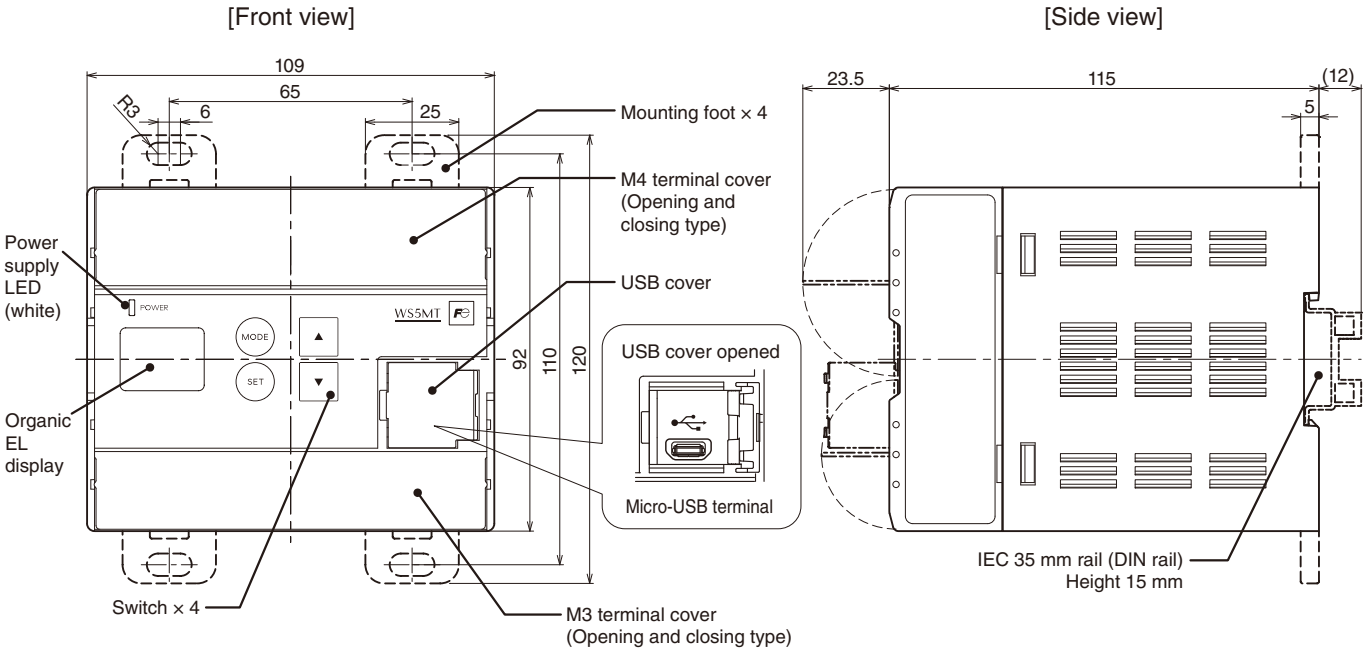

Input-output relationship

■Current, required current

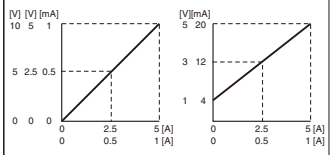

■Power flow current

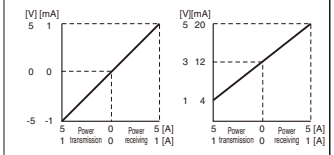

■Line voltage

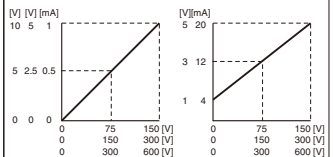

■Phase voltage
(three-phase four-wire)

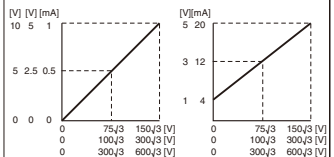

■Power, required power
(power receiving measurement 0...+P[W])

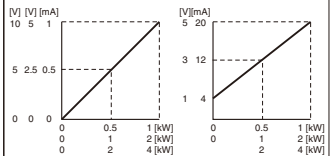

■Power, required power
(send and receive electricity measurement -P...+P[W])

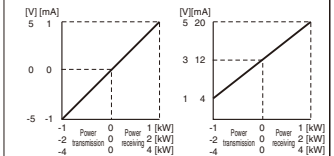

■Power, required power
(power transmission measurement 0...-P[W])

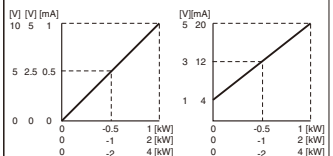

■Power, required power
(send and receive power measurement -P(a)...+P(b)[W])

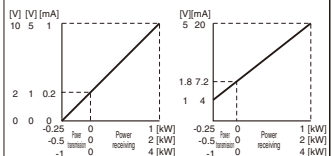

■Reactive power

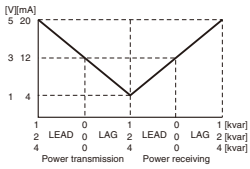

■Power flow reactive power
(4 quadrant)

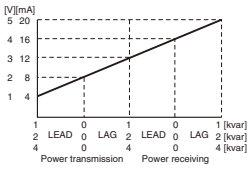

■Power flow reactive power
(2 quadrant)

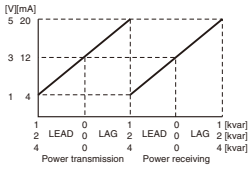

■Power flow reactive power
(2 quadrant Measured for power receiving only)

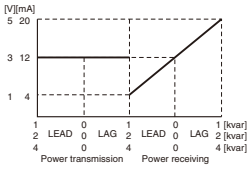

■Power flow reactive power
(2 quadrant Measured for power transmission only)

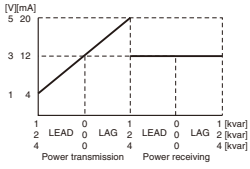

■Apparent power

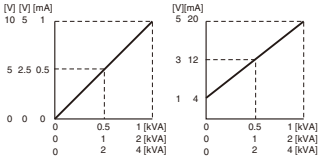

■Power factor
(LEAD 0.5...LAG 0.5)

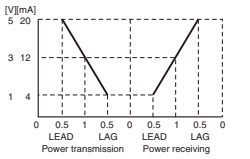

■Power factor
(LEAD 0...LAG 0)

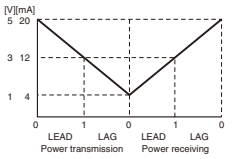

■Power factor
(LAG 0.5...LEAD 0.5)

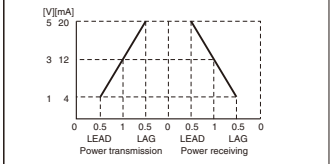

■Power factor
(LAG 0...LEAD 0)

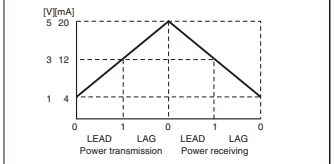

■Power flow power factor
(2 quadrant, Outgoing LEAD 0.5...LAG 0.5)

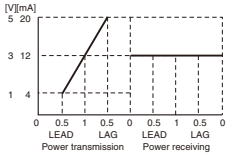

■Power flow power factor
(2 quadrant, Outgoing LEAD 0...LAG 0)

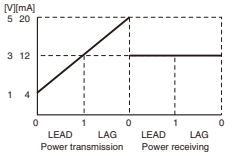

■Power flow power factor
(4 quadrant LEAD 0.5...LAG 0.5)

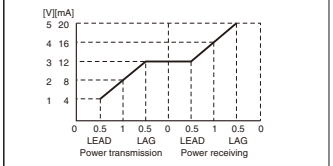

■Power flow power factor
(4 quadrant LEAD 0...LAG 0)

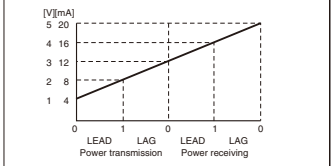

■Frequency

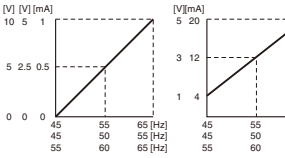

■Harmonic current, 5th conversion RMS value, fundamental-wave, n th RMS value

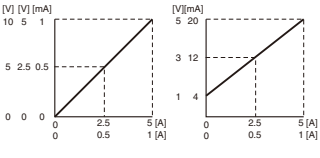

■Power flow power factor
(2 quadrant LEAD 0.5...LAG 0.5)

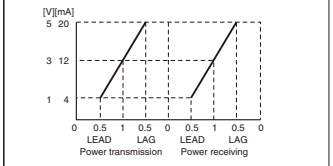

■Power flow power factor
(2 quadrant LEAD 0...LAG 0)

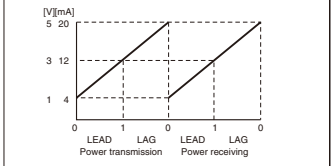

■Harmonic voltage, 5th conversion RMS value, fundamental-wave, n th RMS value

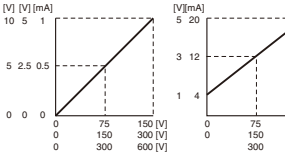

■Harmonic voltage, 5th conversion RMS value, fundamental-wave, n th RMS value

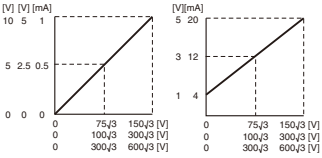

■Power flow power factor
(2 quadrant, Incoming LEAD 0.5...LAG 0.5)

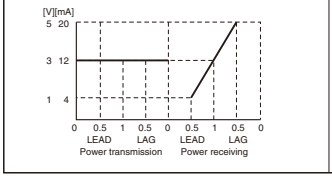

■Power flow power factor
(2 quadrant, Incoming LEAD 0...LAG 0)

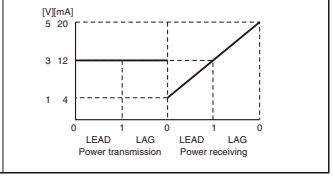

■Harmonic current, Distortion factor, 5th conversion content, n th content

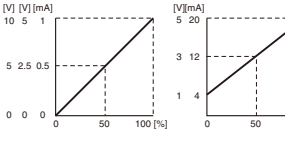

■Harmonic voltage, Distortion factor, 5th conversion content, n th content

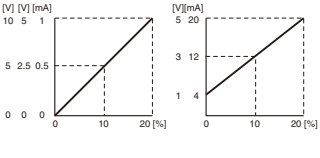

Transducers
Power multi-transducer WS5MT Series

■ Terminal configuration/external connection diagram

- Upper terminal No. 1 to 15
  Auxiliary power supply, voltage, current, binary input, earth terminal
  Screw specifications : M4 screw
  Applicable crimp terminal :
  Crimp terminal for M4 screw
  Terminal section outer diameter 8.5 mm or less
  Tightening torque : 1.0 to 1.3N·m

- Lower terminal No.16 to 42
  Analog output, pulse output, communication output terminal
  Screw specifications : M3 screw
  Applicable crimp terminal :
  Crimp terminal for M3 screw
  Terminal section outer diameter 6 mm or less
  Tightening torque : 0.5 to 0.6 N·m

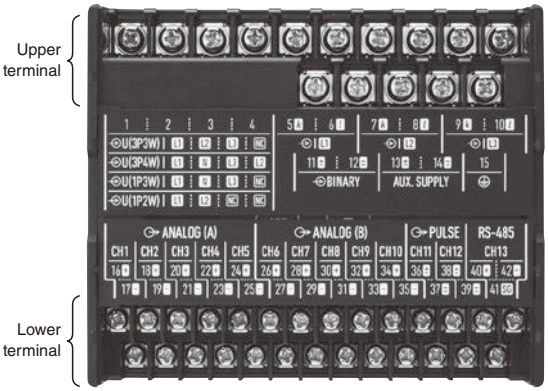

■ Three-phase three-wire (2VT2CT)

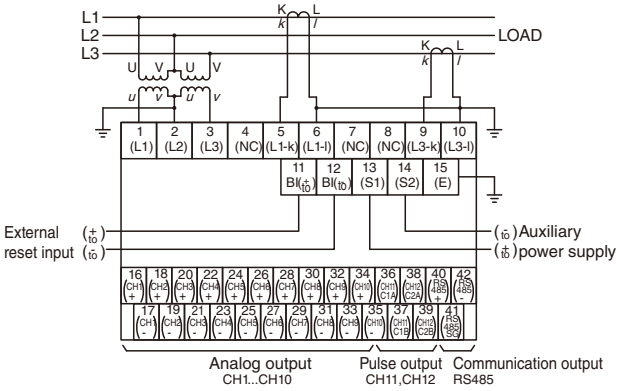

■ Three-phase four-wire (3VT3CT)

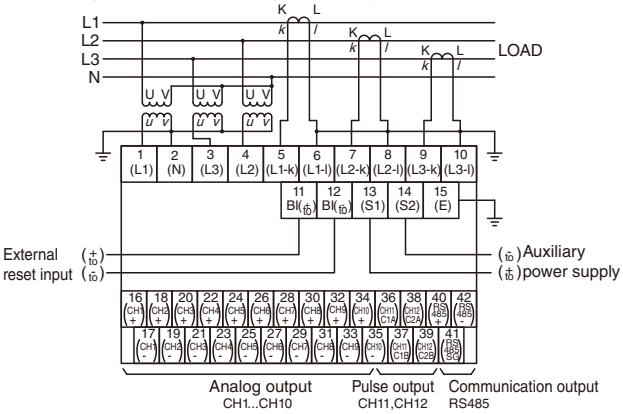

■ Three-phase three-wire (2VT3CT)

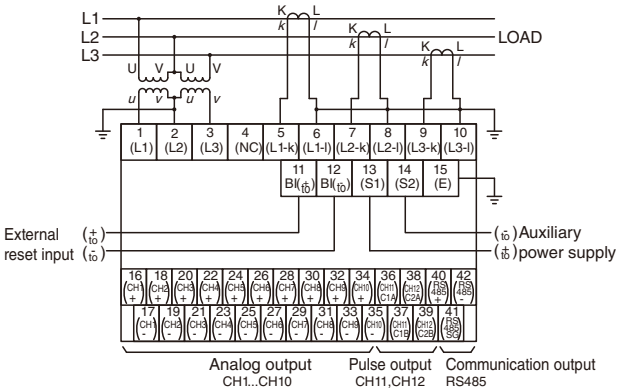

■ Three-phase four-wire (2VT3CT)

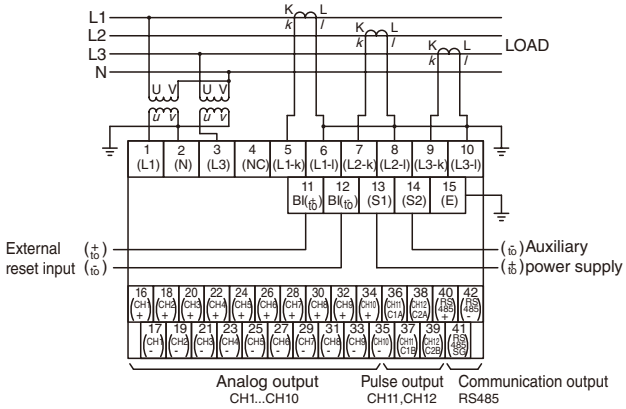

■ Single-phase two-wire

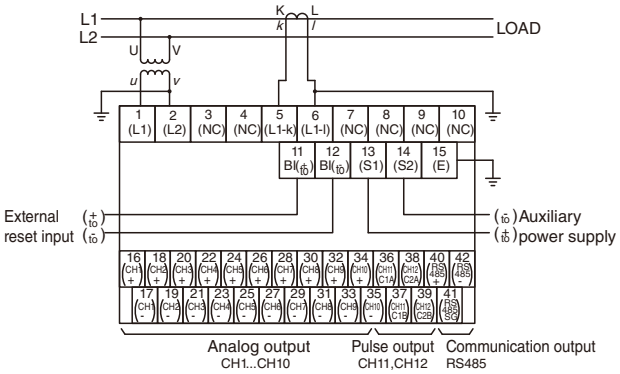

■ Single-phase three-wire

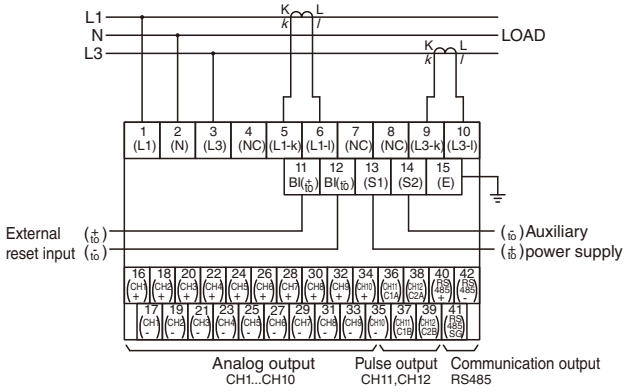

Transducer Exclusively for Rail Mounting WF Series

The WF Series is the most compact and lightest among the line of Fuji's transducers.
The WF Series transducers come with three body types compatible with different wiring screw structures. The WF Series is the most compact among the line of Fuji's transducers.

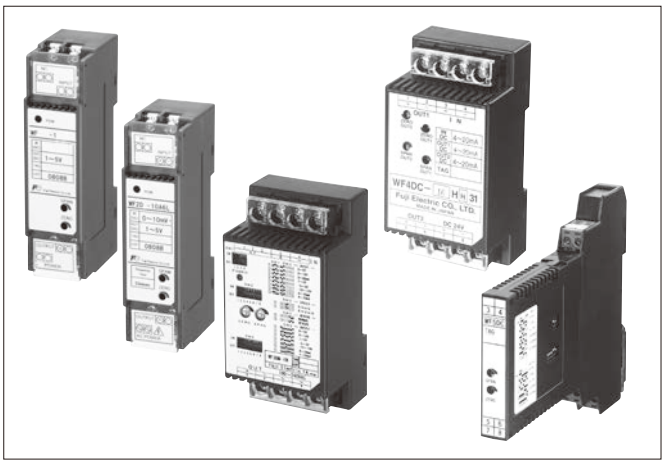

■ Features

- The WF Series transducers conform to CE standards (some models).
- There is a model (WF3DM type) whose input and output specifications can be changed on site.
- The WF Series includes a two-input and two-output (two-channel) model for circuit insulation. (WF5DW type)
- Transducers without a power supply are also available.

■ List of product models

Product model and name	Type	Wiring terminal structure	External power supply specification
insulated transducer (isolator)	**WF1DC**	M3.5 screw	24V DC
DC insulated transducer (high-speed isolator)	**WF1HS**	M3.5 screw	24V DC
Miniature DC insulated transducer (isolator)	**WF1DU**	M3.5 screw	24V DC
AC voltage transducer	**WF1CV**	M3.5 screw	24V DC
AC current transducer	**WF1CA**	M3.5 screw	24V DC
Thermocouple transducers	**WF1TC**	M3.5 screw	24V DC
Resistance temperature sensor transducer	**WF1PT**	M3.5 screw	24V DC
Potentiometer transducer	**WF1PM**	M3.5 screw	24V DC
Distributor (insulated type)	**WF1DY**	M3.5 screw	24V DC
DC insulated transducer (isolator)	**WF2DC**	M3.5 screw	100 to 240V AC
Miniature DC insulated transducer (isolator)	**WF2DU**	M3.5 screw	100 to 240V AC
AC voltage transducer	**WF2CV**	M3.5 screw	100 to 240V AC
AC current transducer	**WF2CA**	M3.5 screw	100 to 240V AC
Thermocouple transducers	**WF2TC**	M3.5 screw	100 to 240V AC
Resistance temperature sensor transducer	**WF2PT**	M3.5 screw	100 to 240V AC
Potentiometer transducer	**WF2PM**	M3.5 screw	100 to 240V AC
Multi-range DC insulated transducer	**WF3DM**	M3.5 screw	100 to 240V AC, 24V DC
Distributor (non-insulated type)	**WF3DB**	M3.5 screw	100 to 240V AC
Load cell transducer	**WF3LC**	Push-locking terminal block	24V DC
Two-output DC insulated transducer (isolator)	**WF4DC**	M3.5 screw	24V DC
Two-output thermocouple transducer	**WF4TC**	Push-locking terminal block	100 to 240V AC, 24V DC
Two-output resistance temperature sensor transducer	**WF4PT**	Push-locking terminal block	100 to 240V AC, 24V DC
Two-output potentiometer transducer	**WF4PM**	Push-locking terminal block	24V DC
Multi-range DC insulated transducer	**WF5DC**	Push-locking terminal block	24V DC
DC insulated transducer (high-speed isolator)	**WF5HS**	Push-locking terminal block	24V DC
Miniature DC insulated transducer (isolator)	**WF5DU**	Push-locking terminal block	24V DC
Potentiometer transducer	**WF5PM**	Push-locking terminal block	24V DC

Transducers
DC Insulated Transducer (Isolator) WF1 Series

■ Features

- The WF Series is the lowest in profile among the line of Fuji's transducers.
- Three ports - input, output, and power - are insulated.
- The transducer can be mounted on an IEC 35-mm rail with a single push.
- The transducer can be connected safely and securely with covered screw terminals.
- Transducers with reverse outputs to input signals can also be offered.

■ Specifications, performance

• Input specifications

Code No.	Input signal	Input resistance
13	0 to 5 V DC	1 MΩ or more
14	0 tp 10 V DC	
15	1 to 5 V DC	
16	4 to 20 mA DC	250 Ω
22	0 to 20 mA DC	
ZZ	Other than ranges listed above	

Available specification ranges for Z
Voltage input: ±250 V AC or less, minimum span: 60 mV DC
(Note) Transducers with a voltage input of 70 V DC or less are CE-marked.
Current input: ±50 mA AC or less, minimum span: 1 mA DC

• Output specifications

Code No.	Output signal	Allowable load resistance
A	1 to 5 V DC	2 MΩ or more
B	0 tp 5 V DC	
C	0 to 10 V DC	4 MΩ or more
H	4 to 20 mA DC	550 Ω or less
P	0 to 20 mA DC	
Z	Other than ranges listed above	

Available specification ranges for Z
Voltage output: -12 to +15 V DC, minimum span: 60 mV DC
Current output: 0 to 20 mA DC or less, minimum span: 1 mA DC

• General specifications
Tolerance: ±0.1% F.S
Temperature characteristic: ±0.02% F.S (°C)
Response speed: 50 ms or less (0 -> 90%)
Insulation resistance: 100 MΩ or over among input, output, and power supply
Dielectric strength: 1500 V AC among input, output, and power supply for 1 minute
External power supply: 24 V DC±10%
Current consumption: 50 mA or less
Operating ambient temperature: -5 to 50°C
Operating ambient humidity: 90% RH or less (No condensation)
Storage temperature: -10 to 70°C
Storage humidity: 25 to 52% RH (No condensation)
Mass: Approx. 80 g
Compatible standard: EN61326-1:2006 (applicable when the length of the cable is 30 meters or shorter; transducers with Z specifications not compatible with the standard)

■ Block diagram

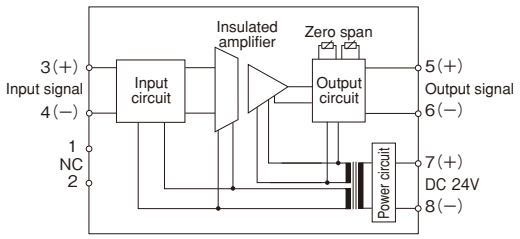

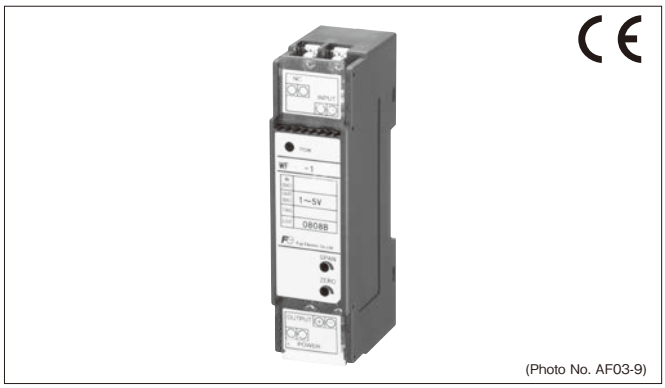
(Photo No. AF03-9)

■ Type number nomenclature

WF1DC-□□ □ 3 1

Input signal

13	0 to 5V DC
14	0 to 10V DC
15	1 to 5V DC
16	4 to 20mA DC
22	0 to 20mA DC
ZZ	Other than ranges listed above

Design order

External power supply

3	24V DC±10%

Output signal

A	1 to 5V DC
B	0 to 5V DC
C	0 to 10V DC
H	4 to 20mA DC
P	0 to 20mA DC
Z	Other than ranges listed above

■ Dimensions, mm

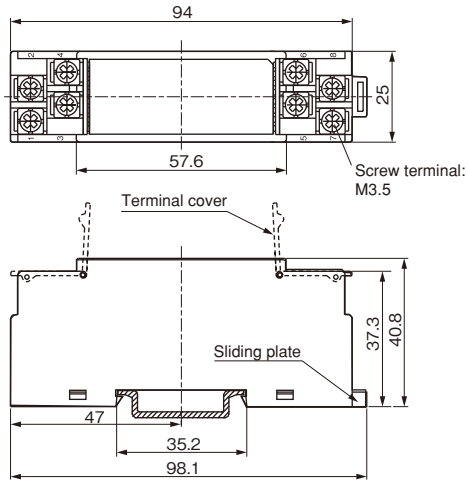

■ External connection diagram

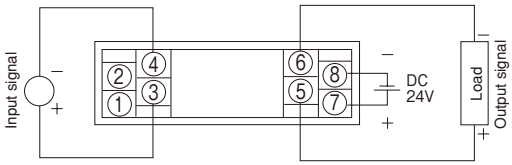

⚠ Caution: Connect the polarities correctly.

DC isolation transducer (high-speed isolator) WF1HS Series

■ Features

- In the Fuji Transducer lineup, it is the series with the lowest height.
- 3-port isolation of input, output and power supply
- One touch mounting on IEC 35 mm rail
- Safe and reliable connection with screw terminal with cover
- Reverse output products can be manufactured for input signals.

■ Specifications/Performance

● Input specifications

Code No.	Input signal	Input resistance
11	0 to 100 mVDC	1 MΩ or above
12	0 to 1 VDC	
13	0 to 5 VDC	
14	0 to 10 VDC	
15	1 to 5 VDC	
16	4 to 20 mADC	250 Ω
24	±10 VDC	1 MΩ or above
ZZ	Other than the above	

Z specification possible range
Voltage input: ±250 VDC, minimum span 0 to 60 mVDC
Current input: ±50 mADC, minimum span 0 to 1 mADC

● Output specifications

Code No.	Output signal	Allowable load resistance
A	1 to 5 VDC	2 kΩ or above
B	0 to 5 VDC	
C	0 to 10 VDC	4 kΩ or above
H	4 to 20 mADC	550 Ω or less
P	0 to 20 mADC	
Z	Other than the above	

Z specification possible range
Voltage output: -12 V to +15 VDC, minimum span 0 to 60 mVDC
Current output: 0 to 20 mADC or less, minimum span 0 to 1 mADC

● General specifications
Tolerance: ±0.1% FS (25°C±2°C)
Temperature characteristic: ±0.02% FS/°C
Response time: 1 msec or less (0→90%)
Isolation resistance: 100 MΩ or above (500 VDC) between input - output - power supply
Withstand voltage: 1500 VAC for 1 minute between input - output - power supply
Auxiliary power supply: 24 VDC±10%
Current consumption: 50 mA or less (at 24 VDC)
Operating ambient temperature: -5°C to 50°C
Operating ambient humidity: 90% RH or less (no condensation)
Storage temperature: Within -10 to 70°C
Storage humidity: 25 to 60% RH (no condensation)
Mass: Approx. 80 g

■ Block diagram

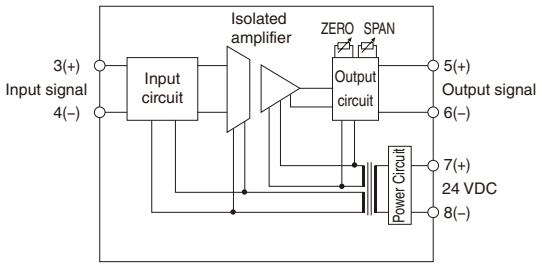

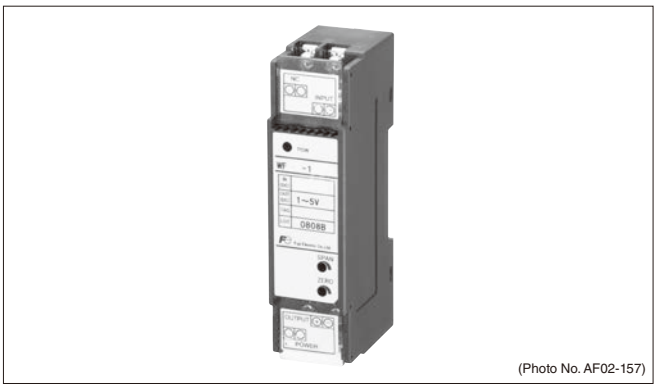
(Photo No. AF02-157)

■ Type (= Product Code) description

WF1HS-□□ □ 3 1

Input signal

11	0 to 100 mVDC
12	0 to 1 VDC
13	0 to 5 VDC
14	0 to 10 VDC
15	1 to 5 VDC
16	4 to 20 mADC
24	±10 VDC
ZZ	Other than the above

Design rank

Auxiliary power supply

3	24 VDC±10%

Output signal

A	1 to 5 VDC
B	0 to 5 VDC
C	0 to 10 VDC
H	4 to 20 mADC
P	0 to 20 mADC
Z	Other than the above

■ External dimensions [unit: mm]

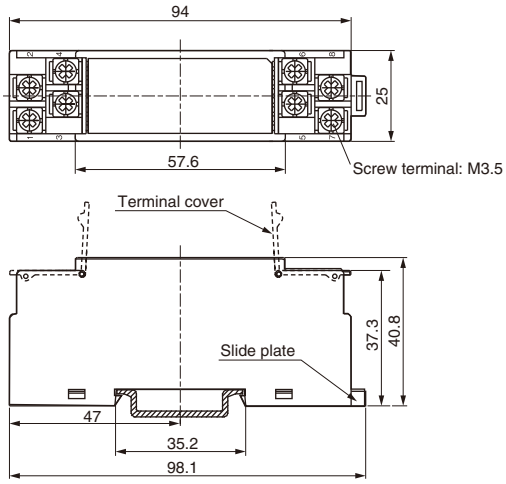

■ External connection diagram

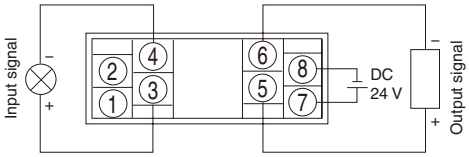

⚠ CAUTION Pay attention to the connection polarity.

Transducers
Micro DC isolation transducer WF1DU Series

■ Features

- In the Fuji Transducer lineup, it is the series with the lowest height.
- 3-port isolation of input, output and power supply
- One touch mounting on IEC 35 mm rail
- Safe and reliable connection with screw terminal with cover
- Reverse output products can be manufactured for input signals.

(Photo No. AF02-156)

■ Specifications/Performance

● Input specifications

Code No.	Input signal	Input resistance
10	0 to 10 mVDC	1 MΩ or above
23	0 to 50 mVDC	
27	0 to 100 μADC	1 kΩ
ZZ	Other than the above	

Z specification range
Voltage input: 100 mVDC or less, minimum span 0 to 5 mVDC
Current input: ±1 mADC or less, minimum span 0 to 10 μADC

● Output specifications: DC voltage, current

Code No.	Output signal	Allowable load resistance
A	1 to 5 VDC	2 kΩ or above
C	0 to 10 VDC	4 kΩ or above
H	4 to 20 mADC	550 Ω or less
Z	Other than the above	

Z specification range
Voltage output: -12 to +15 VDC, minimum span 0 to 60 mVDC
Current output: 0 to 20 mADC or less, minimum span 0 to 1 mADC

● General specifications

Tolerance: ±0.1% FS
Response time: 50 msec or less (0→90%)
Temperature characteristic: ±0.02% FS/°C
Withstand voltage: 1500 VAC for 1 minute between input - output - power supply
Isolation resistance: 100 MΩ or above at 500 VDC between input - output - power supply
Auxiliary power supply: 24 VDC±10%
Consumption current: 50 mA or less
Operating ambient temperature: -5 to 50°C
Operating ambient humidity: 90% RH or less (no condensation)
Storage temperature: Within -10 to 70°C
Storage humidity: 25 to 60% RH (no condensation)
Mass: approx. 80 g

■ Block diagram

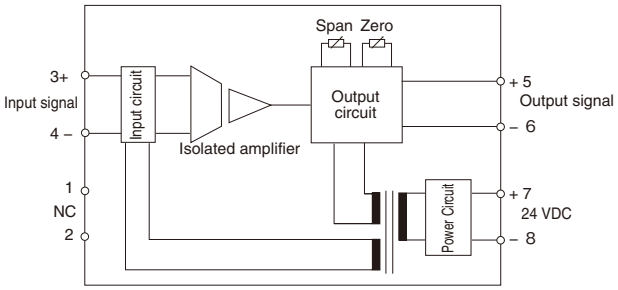

■ Type (= Product Code) description

WF1DU-□□ □ 3 1

Input signal

10	0 to 10 mVDC
23	0 to 50 mVDC
27	0 to 100 μADC
ZZ	Other than the above

Design rank

Auxiliary power supply

3	24 VDC±10%

Output signal

A	1 to 5 VDC
C	0 to 10 VDC
H	4 to 20 mADC
Z	Other than the above

■ External dimensions [unit: mm]

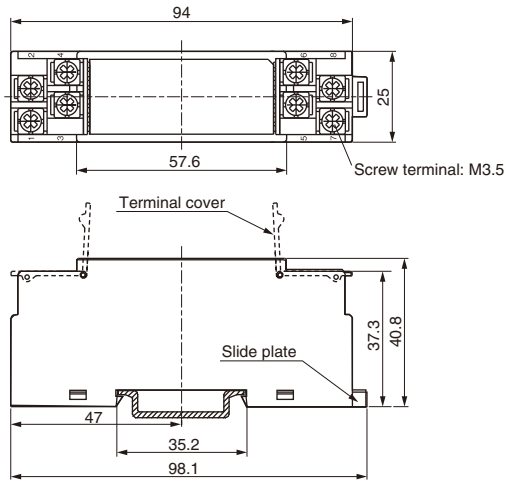

■ External connection diagram

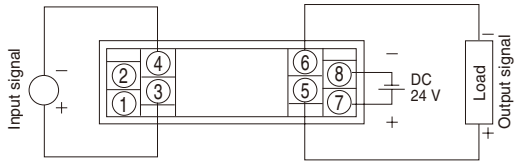

⚠ CAUTION Pay attention to the connection polarity.

AC voltage transducer (true RMS value calculation) WF1CV Series

■ Features

- In the Fuji Transducer lineup, it is the series with the lowest height.
- 3-port isolation of input, output and power supply
- One touch mounting on IEC 35 mm rail
- Safe and reliable connection with screw terminal with cover

■ Specifications/Performance

● Input specifications

Code No.	Input signal	Input resistance
035	0 to 35 VAC	200 kΩ or above
110	0 to 110 VAC	1 MΩ or above
150	0 to 150 VAC	
ZZZ	Other than the above	

Z specification range
Input voltage: 300 VAC or less, minimum span 0 to 4 VAC

● Output specifications

Code No.	Output signal	Load resistance
A	1 to 5 VDC	2 kΩ or above
C	0 to 10 VDC	4 kΩ or above
H	4 to 20 mADC	550 Ω or less
Z	Other than the above	

Z specification range
Current output: 20 mADC or less, minimum span 0 to 1 mADC
Voltage output: -12 V to +15 VDC, minimum span 0 to 60 mVDC

● General specifications

Tolerance: ±1.0% FS (0 to 5% FS) (25°C±2°C)
Input frequency: 40 Hz to 1 kHz
Temperature characteristic: ±0.02% FS/°C
Response time: 700 msec 0→90%
Isolation resistance: 100 MΩ or above (500 VDC) between input - output - power supply
Withstand voltage: 1500 VAC for 1 minute between input - output - power supply
Auxiliary power supply: 24 VDC±10%
Consumption current: 50 mA or less
Operating ambient temperature: -5°C to 50°C
Operating ambient humidity: 90% RH or less (no condensation)
Storage temperature: -10 to 70°C
Storage humidity: 25 to 60% RH (no condensation)
Mass: approx. 80 g

■ Block diagram

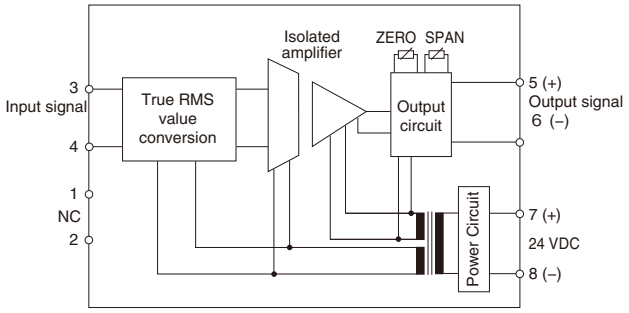

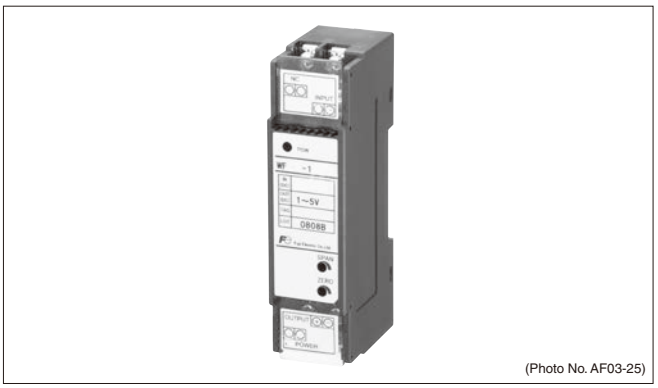
(Photo No. AF03-25)

■ Type (= Product Code) description

WF1CV-□□□ □ 3 1

Input signal

035	0 to 35 VAC
110	0 to 110 VAC
150	0 to 150 VAC
ZZZ	Other than the above

Design rank

Auxiliary power supply

3	24 VDC±10%

Output signal

A	1 to 5 VDC
C	0 to 10 VDC
H	4 to 20 mADC
Z	Other than the above

■ External dimensions [unit: mm]

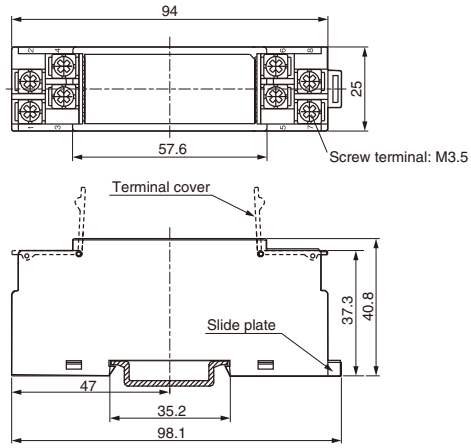

■ External connection diagram

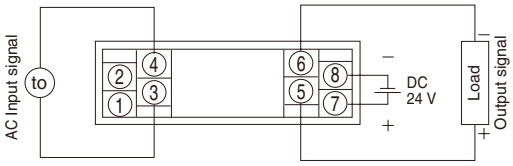

⚠ CAUTION Pay attention to the connection polarity.

Transducers
AC current transducer (true RMS value calculation) WF1CA Series

■ Features

- In the Fuji Transducer lineup, it is the series with the lowest height.
- 3-port isolation of input, output and power supply
- One touch mounting on IEC 35 mm rail
- Safe and reliable connection with screw terminal with cover

■ Specifications/Performance

● Input specifications

Code No.	Input signal	Maximum allowable input value
010	0 to 1 AAC	7.5 A or less (15 A within 1 msec)
050	0 to 5 AAC	
2ZZ	Other than the above	

Z specification range
Input current: 0 to 5 AAC or less, minimum span 0 to 1 AAC

● Output specifications

Code No.	Output signal	Load resistance
A	1 to 5 VDC	2 kΩ or above
C	0 to 10 VDC	4 kΩ or above
H	4 to 20 mADC	550 Ω or less
Z	Other than the above	

Z specification range
Voltage output: -12 V to +15 VDC, minimum span 0 to 60 mVDC
Current output: 20 mADC or less, minimum span 0 to 1 mADC

● General specifications

Tolerance: ±1.0% FS (0 to 5% FS) (25°C±2°C)
Input frequency: 40 Hz to 1 kHz
Temperature characteristics: ±0.02% FS/°C
Response time: 700 msec or less (0→90%)
Isolation resistance: 100 MΩ or above with 500 VDC mega between input - output - power supply
Withstand voltage: 1500 VAC for 1 minute between input - output - power supply
Auxiliary power supply: 24 VDC±10%
Operating ambient temperature: -5°C to 50°C
Operating ambient humidity: 90%RH or less (no condensation)
Storage temperature: -10 to 70°C
Storage humidity: 25 to 60% RH (no condensation)
Mass: approx. 80 g
Applicable circuit: Applies to circuits with AC 300 V or less

■ Block diagram

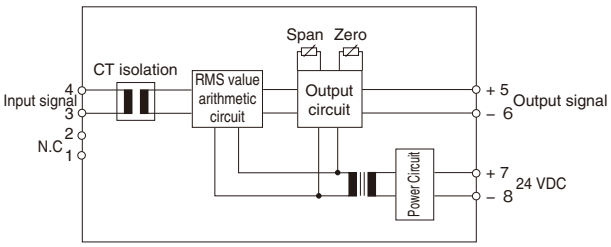

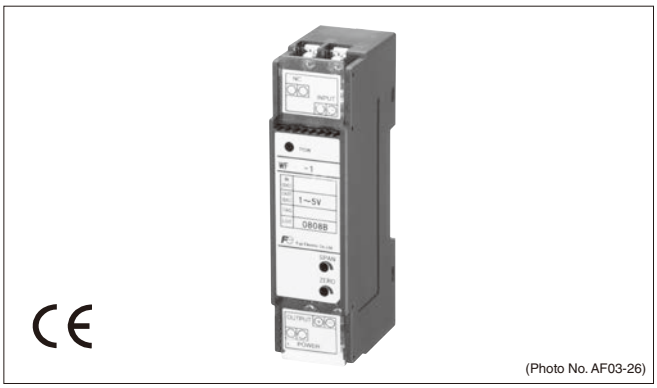

■ Type (= Product Code) description

WF1CA-□□□ □ 3 1

Input signal

010	0 to 1 AAC
050	0 to 5 AAC
2ZZ	Other than the above

Design rank

Auxiliary power supply

3	24 VDC±10%

Output signal

A	1 to 5 VDC
C	0 to 10 VDC
H	4 to 20 mADC
Z	Other than the above

■ External dimensions [unit: mm]

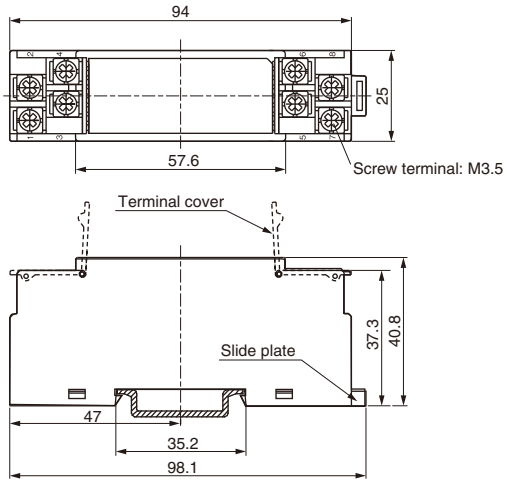

■ External connection diagram

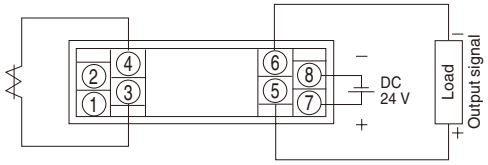

⚠ CAUTION Pay attention to the connection polarity.

■ Features

- In the Fuji Transducer lineup, it is the series with the lowest height.
- 3-port isolation of input, output and power supply
- One touch mounting on IEC 35 mm rail
- Safe and reliable connection with screw terminal with cover
- Features an upper limit burnout function.
- Reverse output products can be manufactured for input signals.

■ Specifications/Performance

● Input/output specification

Input: K(CA) thermocouple conforming to JIS Standard

Code No.	Input temperature range
K15	0 to 500°C
K18	0 to 1000°C
KZZ	Other than the above

Z specification range

Output: DC voltage, current

Code No.	Output signal	Allowable load resistance
A	1 to 5 VDC	2 kΩ or above
C	0 to 10 VDC	4 kΩ or above
H	4 to 20 mADC	550 Ω or less
Z	Other than the above	

Z specification range
Voltage output: -12 V to +15 VDC, minimum span 0 to 60 mVDC
Current output: 20 mADC or less, minimum span 0 to 1 mADC

● General specifications

Tolerance: ±0.2% FS (25°C±2°C)
Temperature characteristics: ±0.02% FS/°C
Response speed: 300 msec or less (0→90%)
Isolation resistance: 100 MΩ or above (500 VDC) between input - output - power supply
Withstand voltage: 1500 VAC for 1 minute between input - output - power supply
Auxiliary power supply: 24 VDC±10%
Current consumption: 35 mA or less
Operating ambient temperature: -5 to 50°C
Operating ambient humidity: 90%RH or less (no condensation)
Cold contact compensation accuracy: ±1°C at 10 to 30°C
Storage temperature: -10 to 70°C
Storage humidity: 25 to 60% RH (no condensation)
Standard function: Burnout (upper)
Mass: approx. 80 g

■ Block diagram

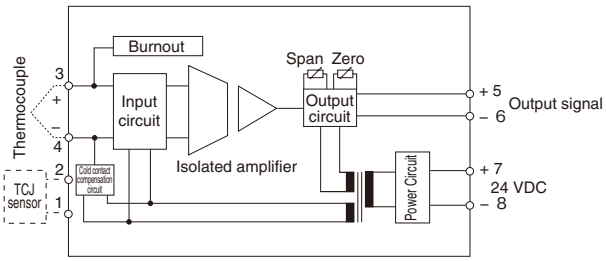

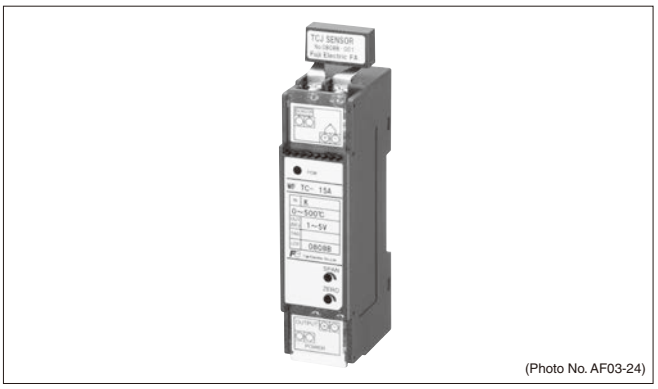
(Photo No. AF03-24)

■ Type (= Product Code) description

WF1TC-□□□ □ 3 1

Input thermocouple

K15	0 to 500°CK thermocouple
K18	0 to 1000°CK thermocouple
KZZ	Other than the above

Design rank

Auxiliary power supply

3	24 VDC±10%

Output signal

A	1 to 5 VDC
C	0 to 10 VDC
H	4 to 20 mADC
Z	Other than the above

■ External dimensions [unit: mm]

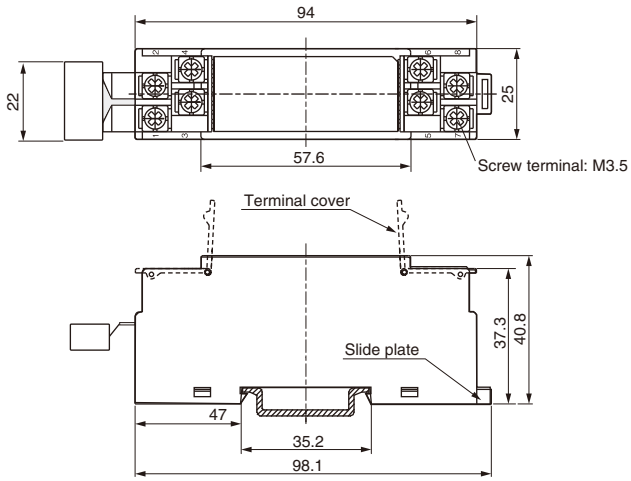

■ External connection diagram

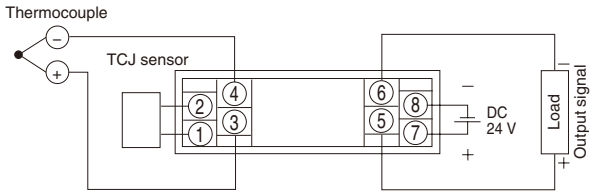

⚠ CAUTION Pay attention to the connection polarity.

Transducers
Temperature measuring resistor transducer WF1PT Series

■ Features

- In the Fuji Transducer lineup, it is the series with the lowest height.
- 3-port isolation of input, output and power supply
- One touch mounting on IEC 35 mm rail
- Safe and reliable connection with screw terminal with cover (M3.5)
- Features an upper limit burnout function.

■ Specifications/Performance

● Input/output specification

Input: Pt100 Ω 3-wire Allowable wire resistance 20 Ω or less

Code No.	Input
211	0 to 100°C
213	0 to 200°C
215	0 to 300°C
217	0 to 400°C
218	0 to 500°C
219	0 to 600°C
2ZZ	Other than the above

Z specification range

Output: DC voltage, current

Code No.	Output signal	Load resistance
A	1 to 5 VDC	2 kΩ or above
C	0 to 10 VDC	4 kΩ or above
H	4 to 20 mADC	550 Ω or less
Z	Other than the above	

Z specification range
Current output: 20 mADC or less, minimum span 0 to 1 mADC
Voltage output: -12 V to +15 VDC, minimum span 0 to 60 mVDC

● General specifications

Tolerance: ±0.1% FS (25°C±2°C)
However, ±0.2% FS when 500°C or above
Temperature characteristics: ±0.02% FS/°C
Response time: 50 ms or less (0→90%)
Withstand voltage: 1500 VAC for 1 minute between input - output - power supply
Isolation resistance: 100 MΩ or above (500 VDC) between input - output - power supply
Auxiliary power supply: 24 VDC±10%
Current consumption: 55 mA or less
Operating ambient temperature: -5 to 50°C
Operating ambient humidity: 90% RH (no condensation)
Storage temperature: -10 to 70°C
Storage humidity: 25 to 60% RH (no condensation)
Standard function: Burnout (upper)
Mass: approx. 80 g

■ Block diagram

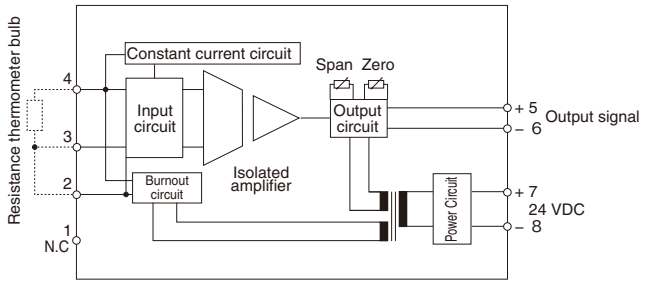

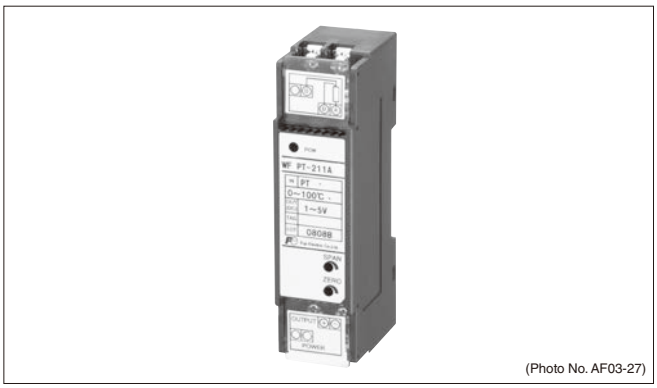
(Photo No. AF03-27)

■ Type (= Product Code) description

WF1PT-□□□ □ 3 1

Resistance thermometer bulb

211	0 to 100°C PT100 Ω
213	0 to 200°C PT100 Ω
215	0 to 300°C PT100 Ω
217	0 to 400°C PT100 Ω
218	0 to 500°C PT100 Ω
219	0 to 600°C PT100 Ω
2ZZ	Other than the above

Design rank

Auxiliary power supply

3	24 VDC±10%

Output signal

A	1 to 5 VDC
C	0 to 10 VDC
H	4 to 20 mADC
Z	Other than the above

■ External dimensions [unit: mm]

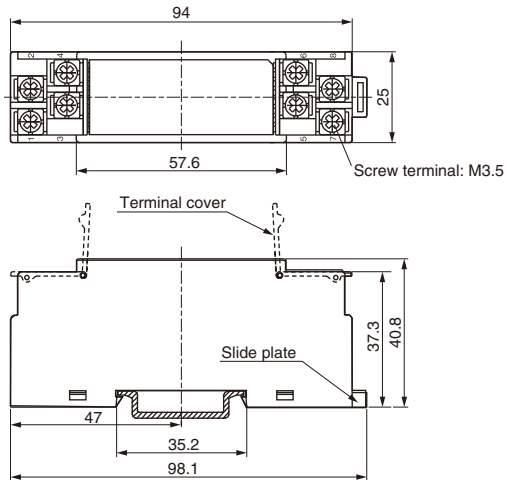

■ External connection diagram

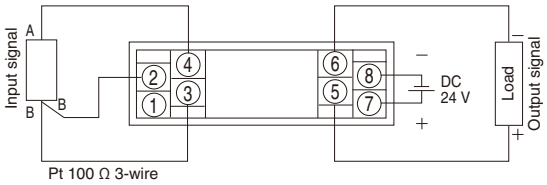

⚠ CAUTION Pay attention to the connection polarity.

■ Features

- If the total resistance value is within the range of 100 Ω to 10 kΩ, the resistance value of the potentiometer can be used regardless.
- 3-port isolation for resistance input, output, power supply

■ Specifications/Performance

● Input specifications

Input: Potentiometer resistance value: Total resistance value 100 Ω to 10 kΩ

* When using the total resistance value (0 to 100%), it can be used without adjustment. When using at a value other than 0 to 100%, the rated input setting can be changed by changing the internal dip switch settings.

Minimum span: 50% or above of the total resistance value

● Output specifications

Code No.	Output signal	Output load resistance
A	1 to 5 VDC	2 kΩ or above
C	0 to 10 VDC	4 kΩ or above
H	4 to 20 mADC	550 Ω or less
ZZ	Other than the above	

Z specification range

Current output: 0 to 20 mADC or less, span 1 mA to 20 mADC

● General specifications

Tolerance: ±0.1% FS (25°C±2°C)
Response time: 50 ms or less (0→90%)
Temperature characteristics: ±0.02% FS/°C
Withstand voltage: 1500 VAC for 1 minute between input - output - power supply
Isolation resistance: 100 MΩ or above at 500 VDC between input - output - power supply
Auxiliary power supply: 24 VDC±10%
Current consumption: 50 mA or less
Operating ambient temperature: -5 to 50°C
Operating ambient humidity: 90%RH or less (no condensation)
Storage temperature: -10 to 70°C
Storage humidity: 25 to 60% RH (no condensation)
Reference voltage: 0.5 V
Mass: approx. 80 g

■ Block diagram

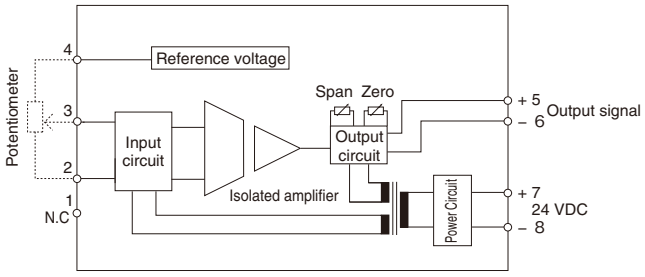

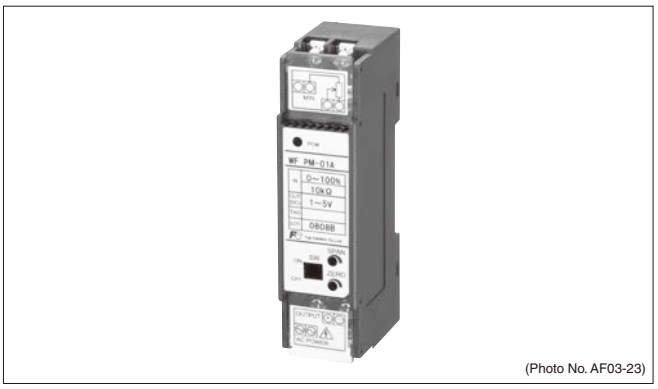
(Photo No. AF03-23)

■ Type (= Product Code) description

WF1PM-01 □ 3 1

Input signal

01	100 Ω to 10 kΩ
ZZ	Specified Ω to specified Ω

Design rank

Auxiliary power supply

3	24 VDC+15% to -5%

Output signal

A	1 to 5 VDC
C	0 to 10 VDC
H	4 to 20 mADC
Z	Other than the above

■ External dimensions [unit: mm]

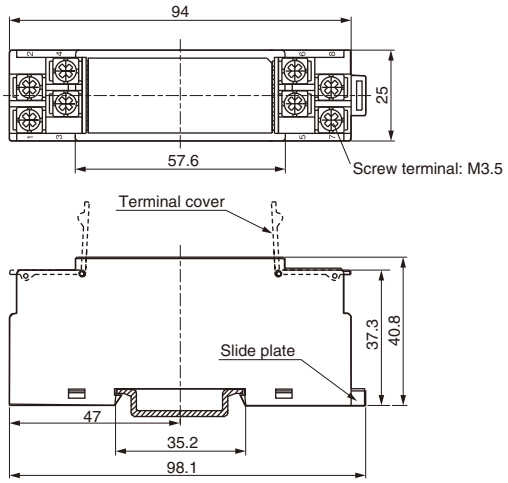

■ External connection diagram

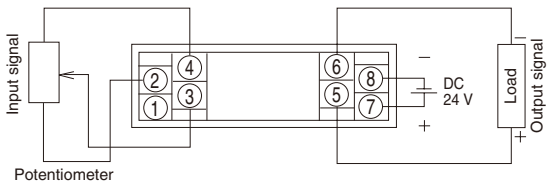

⚠ CAUTION Pay attention to the connection polarity.

Transducers
Distributor (isolated type) WF1DY Series

■ Features

- A product that can be used by combining with a 2-wire transmitter. Supplies predetermined DC power through the signal line to the field transmitter, and converts the 4 to 20 mADC signal transmitted by the transmitter into a signal suitable for input to the monitoring and control equipment, and performs input and output isolation.
- 3-port isolation of input, output and power supply

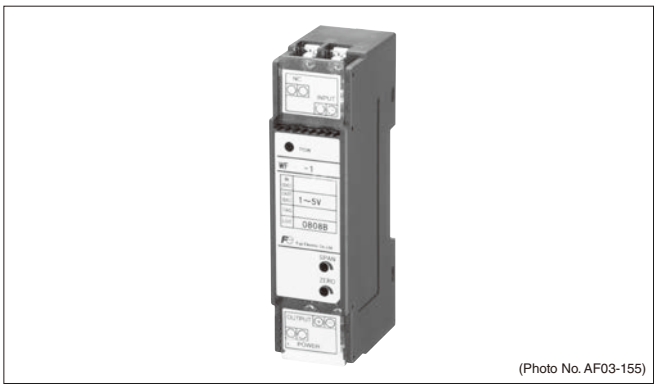
(Photo No. AF03-155)

■ Specifications/Performance

● Input specifications

4 to 20 mA (input resistance 250 Ω)

● Output specifications

Code No.	Output signal	Allowable load resistance
A	1 to 5 VDC	2 kΩ or above
B	0 to 5 VDC	
C	0 to 10 VDC	4 kΩ or above
H	4 to 20 mADC	550 Ω or less
Z	Other than the above	

Z specification range
Voltage output: -12 V to +15 VDC, minimum span 0 to 60 mVDC
Current output: 20 mADC or less, minimum full scale 0 to 1 mADC

● General specifications

Tolerance: ±0.1% FS (25°C±2°C)
Temperature characteristics: ±0.02% FS/°C
Response time: 50 msec or less (0→90%)
Isolation resistance: 100 MΩ or above (500 VDC) between input - output - power supply
Withstand voltage: 1500 VAC for 1 minute between input - output - power supply
Operating ambient temperature: -5°C to 50°C
Operating ambient humidity: 90%RH or less (no condensation)
Storage temperature: -10 to 70°C
Storage humidity: 25 to 60% RH (no condensation)
Mass: approx. 80 g
Accessory: Short bar

■ 2-wire transmitter power supply specifications

Output voltage range: 24 VDC to 32 VDC (no load)
Current capacity: 22 mADC or less
Transmitter circuit short-circuit current: 30 mA or less
Allowable short-circuit time: Infinite

■ Block diagram

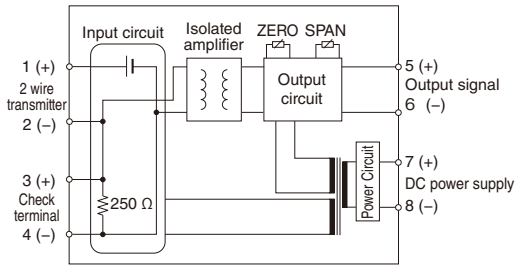

■ Type (= Product Code) description

WF1DY-04 □ 3 1

Input signal

04	24 to 32 VDC

Design rank

Auxiliary power supply

3	24 VDC±10%

Output signal

A	1 to 5 VDC
B	0 to 5 VDC
C	0 to 10 VDC
H	4 to 20 mADC
Z	Other than the above

■ External dimensions [unit: mm]

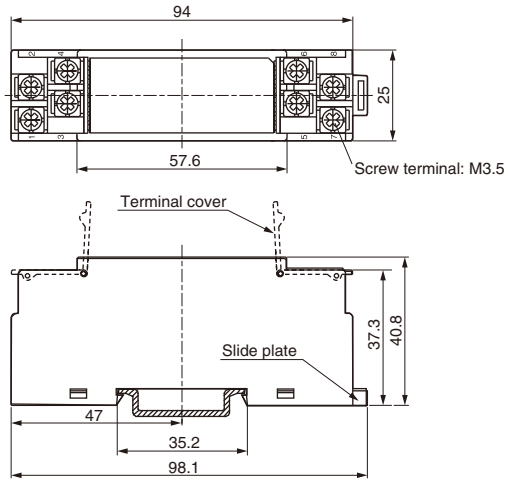

■ External connection diagram

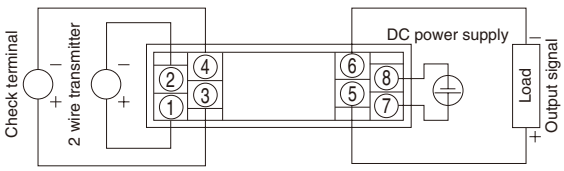

⚠ Note) Note the connection polarity.

DC isolation transducer (isolator) AC power supply type WF2DC Series

■ Features

- In the Fuji Transducer lineup, it is the series with the lowest height.
- 3-port isolation of input, output and power supply
- One touch mounting on IEC 35 mm rail
- Safe and reliable connection with screw terminal with cover (M3.5)

■ Specifications/Performance

● Input specifications

Code No.	Input signal	Input resistance	Input tolerance
11	0 to 100 mVDC	1 MΩ or above	-50 to +150% FS
12	0 to 1 VDC		
13	0 to 5 VDC		
14	0 to 10 VDC		
15	1 to 5 VDC		
16	4 to 20 mADC	250 Ω	
22	0 to 20 mADC		
24	±10 VDC	1 MΩ or above	
32	0 to 20 VDC		
33	0 to 60 mVDC		
41	± 2 VDC		
42	± 5 VDC		
ZZ	Other than the above		

Z specification production range
Voltage input: -250 VDC to 250 VDC, minimum span 0 to 60 mVDC
Current input: -50 mADC to 50 mADC, minimum span 0 to 1 mADC

● Output specifications

Code No.	Output signal	Output load resistance
A	1 to 5 VDC	2 kΩ or above
B	0 to 5 VDC	
C	0 to 10 VDC	4 kΩ or above
H	4 to 20 mADC	550 Ω or less
K	±10 VDC	10 kΩ or above
Z	Other than the above	

Z specification production range
Voltage output: -12 to +15 VDC, minimum span 0 to 60 mVDC
(However, if the span is less than 1 V, the reference precision ±0.15% FS
temperature characteristic ±0.03% FS/°C)
Current output: 0 to 20 mADC, minimum span 0 to 1 mADC
(Both voltage and current output are capable of reverse output)

● General specifications

Reference accuracy: ±0.1% FS (25°C±2°C)
Power fluctuation: ±0.06% FS
Load fluctuation: ±0.06% FS
Temperature characteristics: ±0.02% FS/°C
Response time: 50 ms or 1 ms (0→90%)
VR variable width: ±5% FS (zero, span)
Isolation resistance: 100 MΩ or above (500 VDC) between input - output - power supply
Withstand voltage: 2000 VAC (1 minute) between input - output - power supply
Auxiliary power supply: 100 to 240 VAC±10%
Current consumption: 30 mA or less (100 VAC)
Operating ambient temperature: -5 to 50°C
Operating ambient humidity: 90%RH or less (no condensation)
Storage temperature: -10 to 70°C
Storage humidity: 25 to 60% RH (no condensation)
Mass: approx. 80 g

■ External connection diagram

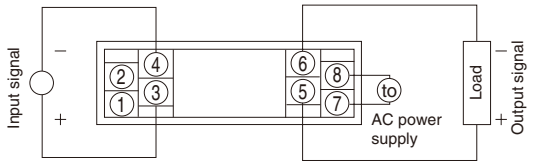

⚠ CAUTION Pay attention to the connection polarity

■ Type (= Product Code) description

WF2DC-□□ □6□

Input signal

11	0 to 100 mVDC
12	0 to 1 VDC
13	0 to 5 VDC
14	0 to 10 VDC
15	1 to 5 VDC
16	4 to 20 mADC
22	0 to 20 mADC
24	±10 VDC
32	0 to 20 VDC
33	0 to 60 mVDC
41	± 2 VDC
42	± 5 VDC
ZZ	Other than the above

Response time

L	50 ms
H	1 ms (excluding current output)

Auxiliary power supply

6	100 to 240 VAC±10%

Output signal

A	1 to 5 VDC
B	0 to 5 VDC
C	0 to 10 VDC
H	4 to 20 mADC
K	±10 VDC
Z	Other than the above

■ External dimensions [unit: mm]

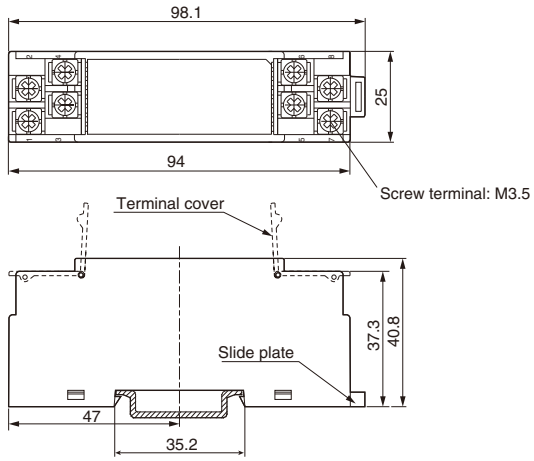

■ Block diagram

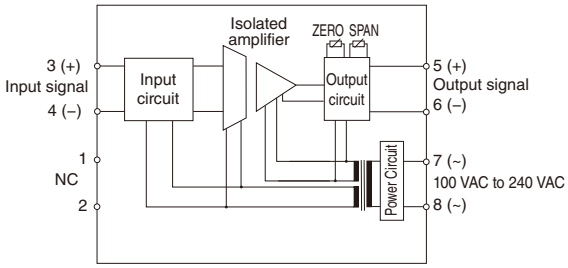

Transducers
Micro DC isolation transducer AC power supply type WF2DU Series

■ Features

- In the Fuji Transducer lineup, it is the series with the lowest height.
- 3-port isolation of input, output and power supply
- One touch mounting on IEC 35 mm rail
- Safe and reliable connection with screw terminal with cover (M3.5)
- Reverse output products can be manufactured for input signals.

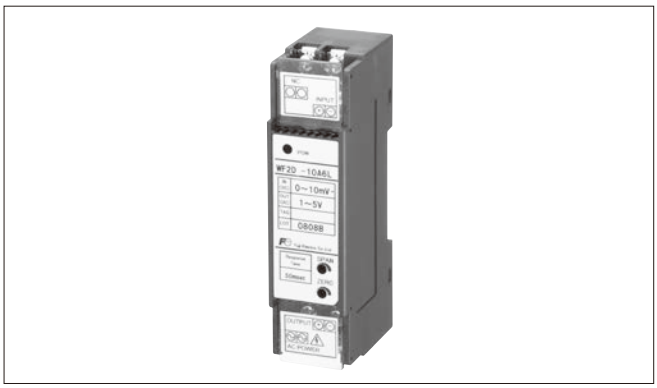

■ Specifications/Performance

● Input specifications

Code No.	Input signal	Input resistance	Input tolerance
10	0 to 10 mVDC	1 MΩ or above	-50 to +150% FS
11	0 to 100 mVDC		
23	0 to 50 mVDC		
27	0 to 100 μADC	1 kΩ or less	
28	0 to 200 μADC	500 Ω or less	
29	0 to 10 μADC	1 kΩ or less	
33	0 to 60 mVDC	1 MΩ or above	
34	0 to 5 mVDC		
ZZ	Other than the above		

Z specification production range
Voltage input: -100 mVDC to 100 mVDC, minimum span 0 to 60 mVDC
Current input: -5 mADC to 5 mADC, span 10 μADC to 10 mADC

● Output specifications

Code No.	Output signal	Output load resistance
A	1 to 5 VDC	2 kΩ or above
B	0 to 5 VDC	
C	0 to 10 VDC	4 kΩ or above
H	4 to 20 mADC	550 Ω or less
K	±10 VDC	10 kΩ or above
Z	Other than the above	

Z specification production range
Voltage output: -12 to +15 VDC, minimum span 0 to 60 mVDC
(However, if the span is less than 1 V, the reference precision ±0.15%
FS temperature characteristic ±0.03% FS/°C)
Current output: 0 to 20 mADC, minimum span 0 to 1 mADC

● General specifications

Reference precision: ±0.1% FS (25°C±2°C)
Power fluctuation: ±0.06% FS
Load fluctuation: ±0.06% FS
Temperature characteristics: ±0.02% FS/°C
Response time: 50 ms or 3 ms (0→90%)
VR variable width: ±5% FS (zero, span)
Isolation resistance: 100 MΩ or above (500 VDC) between input - output - power supply
Withstand voltage: 2000 VAC (1 minute) between input - output - power supply
Auxiliary power supply: 100 to 240 VAC±10%
Current consumption: 30 mA or less (100 VAC)
Operating ambient temperature: -5 to 50°C
Operating ambient humidity: 90%RH or less (no condensation)
Storage temperature: -10 to 70°C
Storage humidity: 25 to 60% RH (no condensation)
Mass: approx. 80 g

■ External connection diagram

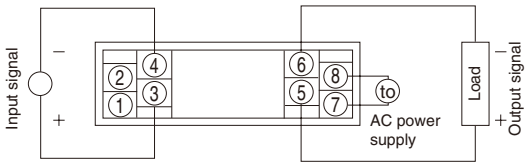

⚠ CAUTION Pay attention to the connection polarity

■ Type (= Product Code) description

WF2DU-□□ □ 6 □

Input signal

34	0 to 5 mVDC
10	0 to 10 mVDC
23	0 to 50 mVDC
33	0 to 60 mVDC
11	0 to 100 mVDC
29	0 to 10 μADC
27	0 to 100 μADC
28	0 to 200 μADC
ZZ	Other than the above

Response time

L	50 ms
H	3 ms (excluding current output)

Auxiliary power supply

6	100 to 240 VAC±10%

Output signal

A	1 to 5 VDC
B	0 to 5 VDC
C	0 to 10 VDC
H	4 to 20 mADC
K	±10 VDC
Z	Other than the above

■ External dimensions [unit: mm]

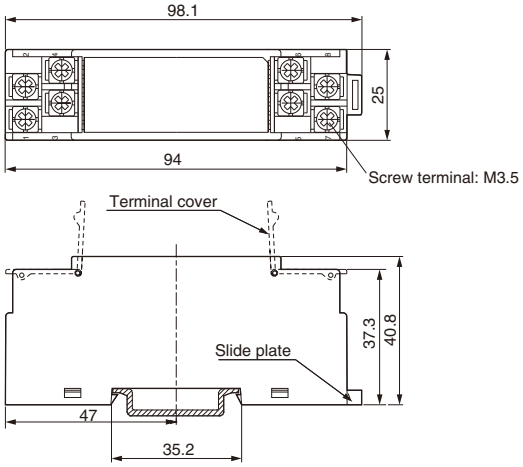

■ Block diagram

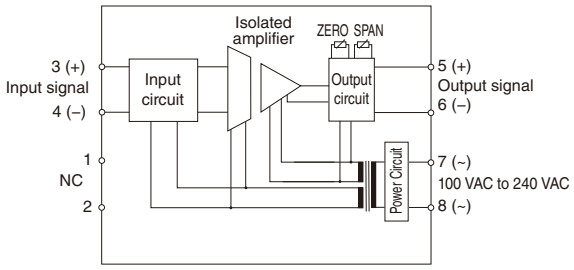

Fuji Electric FA Components & Systems Co., Ltd.
Information subject to change without notice

AC voltage transducer (true RMS value calculation) AC power supply type WF2CV Series

■ Features

- In the Fuji Transducer lineup, it is the series with the lowest height.
- 3-port isolation of input, output and power supply
- One touch mounting on IEC 35 mm rail
- Safe and reliable connection with screw terminal with cover (M3.5)
- Reverse output products can be manufactured for input signals.

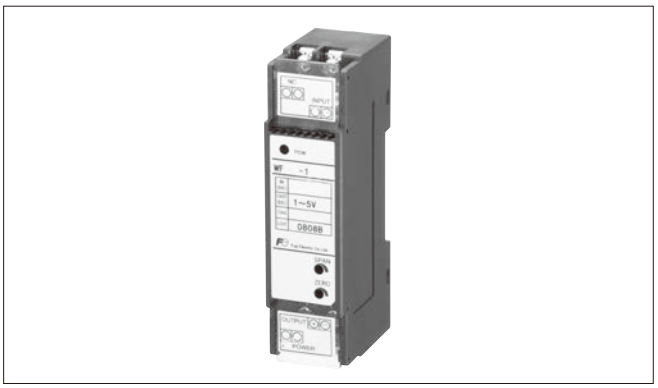

■ Specifications/Performance

● Input specifications

Code No.	Input signal	Input resistance	Input tolerance
035	0 to 35 VAC	200 kΩ or above	150% or less (However, upper limit 300 VAC)
100	0 to 100 VAC	1 MΩ or above	
110	0 to 110 VAC		
200	0 to 200 VAC		
220	0 to 220 VAC		
ZZZ	Other than the above		

Z specification production range
Voltage input: 0 to 300 VAC, minimum span 0 to 4 VAC
Input frequency: 40 Hz to 1 kHz
Note) Measurement errors increase when measuring waveforms containing harmonic components above the input frequency.

● Output specifications

Code No.	Output signal	Output load resistance
A	1 to 5 VDC	2 kΩ or above
B	0 to 5 VDC	
C	0 to 10 VDC	4 kΩ or above
H	4 to 20 mADC	550 Ω or less
K	±10 VDC	10 kΩ or above
Z	Other than the above	

Z specification production range
Voltage output: -12 to +15 VDC, minimum span 0 to 60 mVDC
Current output: 0 to 20 mADC, minimum span 0 to 1 mADC

● General specifications

Reference accuracy: ±0.2% FS (5 to 100% FS) (25°C±2°C)
±1.0% FS (0 to 5% FS) (25°C±2°C)
Power fluctuation: ±0.06% FS
Load fluctuation: ±0.06% FS
Frequency fluctuation: ±3% FS (60 Hz standard)
Temperature characteristics: ±0.02% FS/°C
Response time: 700 ms or less (0→90%)
VR variable width: ±5% FS (zero, span)
Isolation resistance: 100 MΩ or above (500 VDC) between input - output - power supply
Withstand voltage: 2000 VAC (1 minute) between input - output - power supply
Auxiliary power supply: 100 to 240 VAC±10%
Current consumption: 30 mA or less (100 VAC)
Operating ambient temperature: -5°C to 50°C
Operating ambient humidity: 90%RH or less (no condensation)
Storage temperature: -10 to 70°C
Storage humidity: 25 to 60% RH (no condensation)
Mass: approx. 80 g

■ External connection diagram

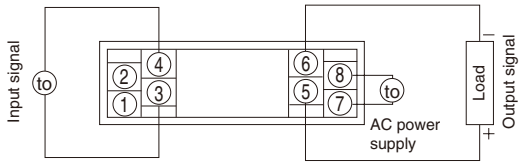

⚠ CAUTION Pay attention to the connection polarity

■ Type (= Product Code) description

WF2CV-□□□ □ 6

Input signal

035	0 to 35 VAC
100	0 to 100 VAC
110	0 to 110 VAC
200	0 to 200 VAC
220	0 to 220 VAC
ZZZ	Other than the above

Auxiliary power supply

6	100 to 240 VAC±10%

Output signal

A	1 to 5 VDC
B	0 to 5 VDC
C	0 to 10 VDC
H	4 to 20 mADC
K	±10 VDC
Z	Other than the above

■ External dimensions [unit: mm]

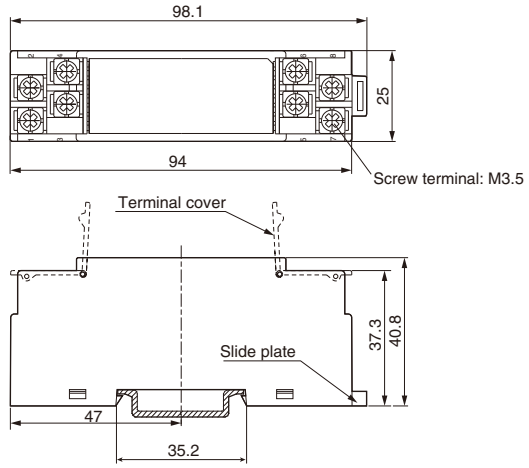

■ Block diagram

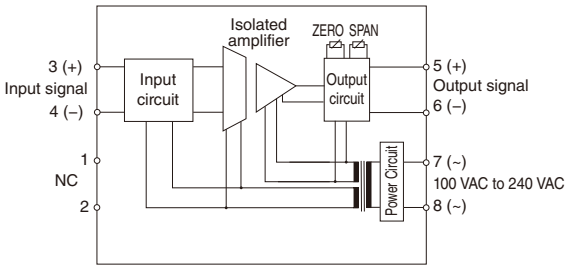

Transducers

AC current transducer (true RMS value calculation) AC power supply type WF2CA Series

■ Features

- In the Fuji Transducer lineup, it is the series with the lowest height.
- 3-port isolation of input, output and power supply
- One touch mounting on IEC 35 mm rail
- Safe and reliable connection with screw terminal with cover (M3.5)
- Reverse output products can be manufactured for input signals.

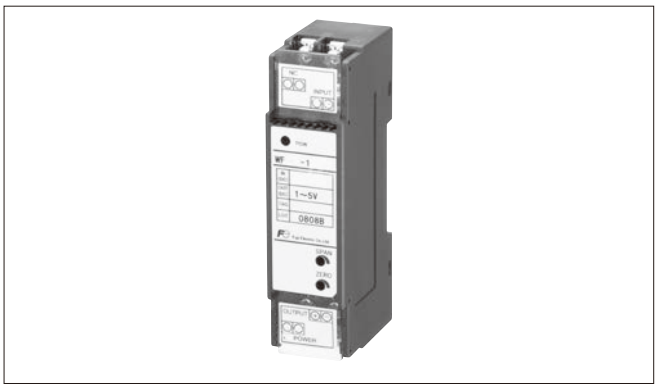

■ Specifications/Performance

● Input specifications

Code No.	Input signal	Input resistance	Input tolerance
010	0 to 1 AAC	0.05 Ω or less	7.5 A or less (15 A, within 1 ms)
050	0 to 5 AAC		
2ZZ	Other than the above		

Z specification production range
0 to 5 AAC or less, span 1 AAC to 5 AAC
Input frequency: 40 Hz to 1 kHz
Note) Measurement errors increase when measuring waveforms containing harmonic components above the input frequency.

● Output specifications

Code No.	Output signal	Output load resistance
A	1 to 5 VDC	2 kΩ or above
B	0 to 5 VDC	
C	0 to 10 VDC	4 kΩ or above
H	4 to 20 mADC	550 Ω or less
K	±10 VDC	10 kΩ or above
Z	Other than the above	

Z specification production range
Voltage output: -12 to +15 VDC, minimum span 0 to 60 mVDC
Current output: 0 to 20 mADC, minimum span 0 to 1 mADC

● General specifications

Reference precision: ±0.2% FS (5 to 100% FS) (25°C±2°C)
±1.0% FS (0 to 5% FS) (25°C±2°C)
Power supply fluctuation: ±0.06% FS (however, ±0.5% for 0 to 5% input)
Load fluctuation: ±0.1% FS (however, ±0.5% for 0 to 5% input)
Frequency fluctuation: ±3% FS (60 Hz standard)
Temperature characteristics: ±0.02% FS/°C
Response time: 700 ms or less (0→90%)
VR variable width: ±5% FS (zero, span) or above
Isolation resistance: 100 MΩ or above (500 VDC) between input - output - power supply
Withstand voltage: 2000 VAC (1 minute) between input - output - power supply
Auxiliary power supply: 100 to 240 VAC±10%
Current consumption: 20 mA or less (100 VAC)
Operating ambient temperature: -5°C to 50°C
Operating ambient humidity: 90%RH or less (no condensation)
Storage temperature: -10 to 70°C
Storage humidity: 25 to 60% RH (no condensation)
Mass: approx. 80 g
Applicable circuit: Applies to circuits with 300 VAC or less

■ External connection diagram

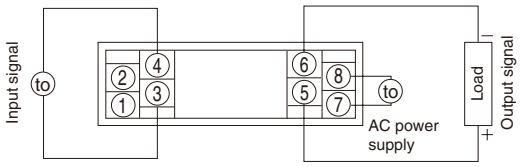

⚠ CAUTION Pay attention to the connection polarity

■ Type (= Product Code) description

WF2CA-□□□ □ 6

Input signal

010	0 to 1 AAC
050	0 to 5 AAC
2ZZ	Other than the above

Auxiliary power supply

6	100 to 240 VAC±10%

Output signal

A	1 to 5 VDC
B	0 to 5 VDC
C	0 to 10 VDC
H	4 to 20 mADC
K	±10 VDC
Z	Other than the above

■ External dimensions [unit: mm]

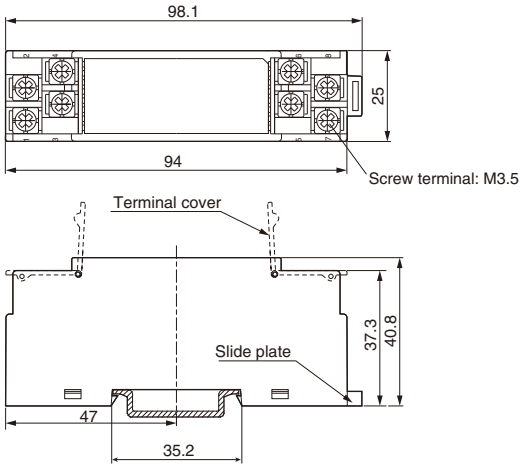

■ Block diagram

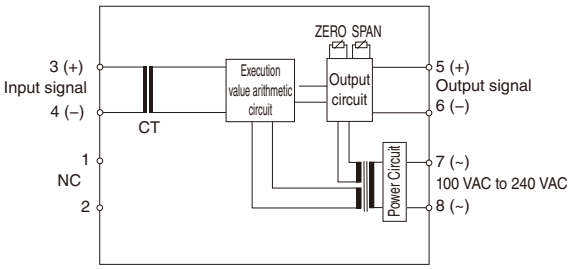

Thermocouple transducer AC power supply type WF2TC Series

■ Features

- In the Fuji Transducer lineup, it is the series with the lowest height.
- 3-port isolation of input, output and power supply
- One touch mounting on IEC 35 mm rail
- Safe and reliable connection with screw terminal with cover (M3.5)
- Features an upper limit burnout function.
- Reverse output products can be manufactured for input signals.

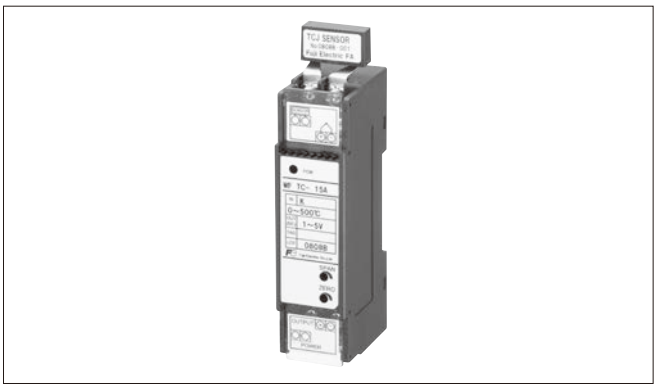

■ Specifications/Performance

● Input specifications

Code No.	Sensor	Measurement range	Nonstandard production range
J15	J	0 to 500°C	
JZZ		Other than the above	Within the range of -50 to 1000°C, span 200 to 1050°C
K10	K	0 to 200°C	
K19		0 to 1200°C	
KZZ		Other than the above	Within the range of -50 to 1200°C, span 200 to 1250°C
R20	R	0 to 1400°C	
RZZ		Other than the above	Within the range of 0 to 1700°C, span 400 to 1700°C
S22	S	0 to 1600°C	
SZZ		Other than the above	Within the range of 0 to 1700°C, span 500 to 1700°C
T12	T	0 to 300°C	
TZZ		Other than the above	Within the range of -50 to 350°C, span 200 to 400°C

Allowable input value: -50 to 150%

● Output specifications

Code No.	Output signal	Output load resistance
A	1 to 5 VDC	2 kΩ or above
B	0 to 5 VDC	
C	0 to 10 VDC	4 kΩ or above
H	4 to 20 mADC	550 Ω or less
K	±10 VDC	10 kΩ or above
Z	Other than the above	

Z specification production range
Voltage output: -12 to +15 VDC, minimum span 0 to 60 mVDC
* Span of less than 1 V has standard precision ±0.15% FS temperature characteristics ±0.03% FS/°C
Current output: 0 to 20 mADC, minimum span 0 to 1 mADC

● General specifications

Reference accuracy: ±0.2% FS (25°C±2°C)
Power supply fluctuation: ±0.06% FS (versus supply voltage ±10% fluctuation)
Load fluctuation: ±0.06% FS
Temperature characteristics: ±0.02% FS/°C
Response time: 500 ms (0→90%)
VR variable width: ±5% FS (zero, span)
Disconnection detection: Upper (135±10% FS)
Isolation resistance: 100 MΩ or above (500 VDC) between input - output - power supply
Withstand voltage: 2000 VAC (1 minute) between input - output - power supply
Auxiliary power supply: 100 to 240 VAC±10%
Current consumption: 35 mA or less (100 VAC)
Operating ambient temperature: -5°C to 50°C
Operating ambient humidity: 90%RH or less (no condensation)
Storage temperature: -10 to 70°C
Storage humidity: 25 to 85% RH (no condensation)
Mass: approx. 80 g

■ External connection diagram

⚠ CAUTION Pay attention to the connection polarity

■ Type (= Product Code) description

WF2TC-□□□ □ 6

Input thermocouple

J15	0 to 500°C J thermocouple
JZZ	Other than the above
K10	0 to 200°C K thermocouple
K19	0 to 1200°C K thermocouple
KZZ	Other than the above
R20	0 to 1400°C R thermocouple
RZZ	Other than the above
S22	0 to 1600°C S thermocouple
SZZ	Other than the above
T12	0 to 300°C T thermocouple
TZZ	Other than the above

Auxiliary power supply

6	100 to 240 VAC±10%

Output signal

A	1 to 5 VDC
B	0 to 5 VDC
C	0 to 10 VDC
H	4 to 20 mADC
K	±10 VDC
Z	Other than the above

■ External dimensions [unit: mm]

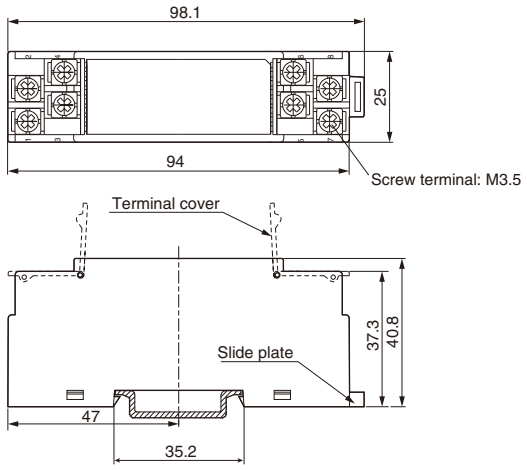

■ Block diagram

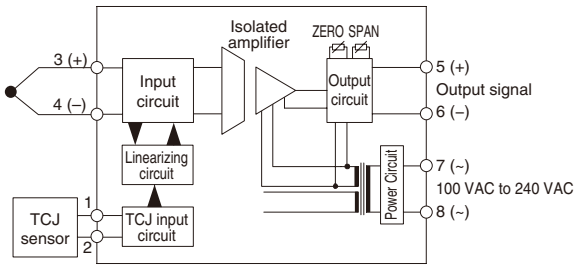

Transducers

Resistance temperature sensor transducer AC power supply type WF2PT Series

■ Features

- In the Fuji Transducer lineup, it is the series with the lowest height.
- 3-port isolation of input, output and power supply
- One touch mounting on IEC 35 mm rail
- Safe and reliable connection with screw terminal with cover (M3.5)
- Features an upper limit burnout function.
- Reverse output products can be manufactured for input signals.

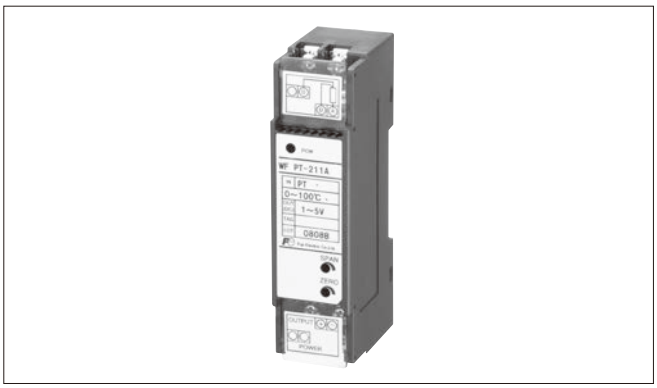

■ Specifications/Performance

● Input specifications

Code No.	Input signal	Allowable input value
211	Pt100 Ω 0 to 100°C	-50 to +150%
213	Pt100 Ω 0 to 200°C	
215	Pt100 Ω 0 to 300°C	
217	PT100 Ω 0 to 400°C	
218	PT100 Ω 0 to 500°C	
219	PT100 Ω 0 to 600°C	
222	PT100 Ω ± 50°C	
2ZZ	Other than the above	

JIS C1604-1997
Z specification production range
Pt input: -50 to 800°C, minimum span 0 to 50°C

● Output specifications

Code No.	Output signal	Output load resistance
A	1 to 5 VDC	2 kΩ or above
B	0 to 5 VDC	
C	0 to 10 VDC	4 kΩ or above
H	4 to 20 mADC	550 Ω or less
K	±10 VDC	10 kΩ or above
Z	Other than the above	

Z specification production range
Voltage output: -12 to +15 VDC, minimum span 0 to 60 mVDC
Current output: 0 to 20 mADC, minimum span 0 to 1 mADC

● General specifications

Reference accuracy: ±0.1% FS (25°C±2°C), however ±0.2% FS when 500°C or above
Power fluctuation: ±0.06% FS
Load fluctuation: ±0.06% FS
Temperature characteristics: ±0.02% FS/°C
Response time: 50 ms (0→90%)
VR variable width: ±5% FS (zero, span)
Disconnection detection: Upper (135±10% FS)
Isolation resistance: 100 MΩ or above (500 VDC) between input - output - power supply
Withstand voltage: 2000 VAC (1 minute) between input - output - power supply
Auxiliary power supply: 100 to 240 VAC±10%
Current consumption: 35 mA or less (100 VAC)
Operating ambient temperature: -5 to 50°C
Operating ambient humidity: 90%RH or less (no condensation)
Storage temperature: -10 to 70°C
Storage humidity: 25 to 85% RH (no condensation)
Mass: approx. 80 g

■ External connection diagram

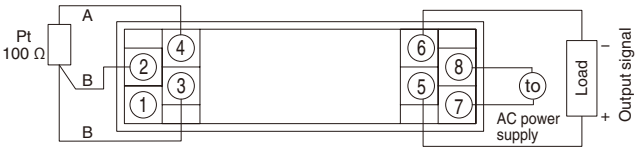

⚠ CAUTION Pay attention to the connection polarity

■ Type (= Product Code) description

WF2PT-2□□ □ 6

Resistance temperature sensor

211	0 to 100°C PT100 Ω
213	0 to 200°C PT100 Ω
215	0 to 300°C PT100 Ω
217	0 to 400°C PT100 Ω
218	0 to 500°C PT100 Ω
219	0 to 600°C PT100 Ω
222	±50°C PT100 Ω
2ZZ	Other than the above

Auxiliary power supply

6	100 to 240 VAC±10%

Output signal

A	1 to 5 VDC
B	0 to 5 VDC
C	0 to 10 VDC
H	4 to 20 mADC
K	±10 VDC
Z	Other than the above

■ External dimensions [unit: mm]

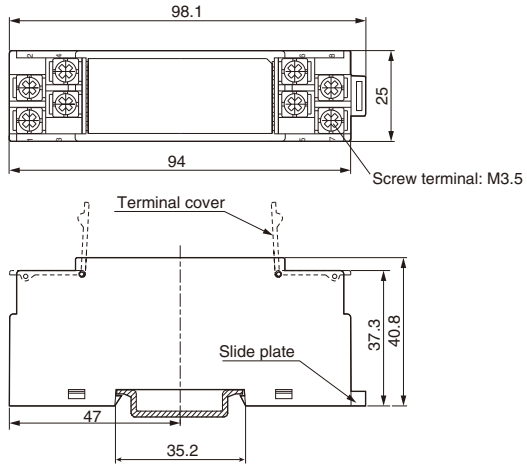

■ Block diagram

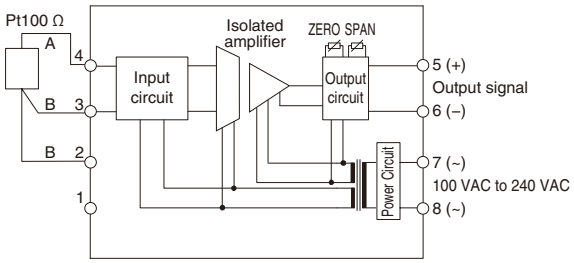

Fuji Electric FA Components & Systems Co., Ltd.
Information subject to change without notice

Potentiometer transducer AC power supply type WF2PM Series

■ Features

- If the total resistance value is within the range of 100 Ω to 10 kΩ, the resistance value of the potentiometer can be used regardless.
- 3-port isolation of input, output and power supply

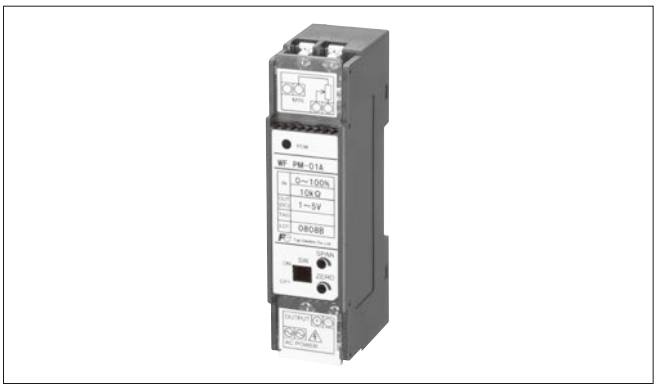

■ Specifications/Performance

● Input specifications

Code No.	Potentiometer	Input range
01	100 Ω to 10 kΩ	0 to 100%
ZZ	Specified Ω to specified Ω	

ZZ specification production range: Within 100 Ω to 10 kΩ 50% span width or above
Input code 1 has a built-in dip switch that can switch the span width step by step (cannot be used when ZZ specification is selected).
SW1 ON: 0 to 100% (span adjustment width 95 to 105%)
SW2 ON: 0 to 90% (span adjustment width 65 to 95%)
SW3 ON: 0 to 80% (span adjustment width 75 to 85%)
SW4 ON: 0 to 70% (span adjustment width 65 to 75%)

● Output specifications

Code No.	Output signal	Output load resistance
A	1 to 5 VDC	2 kΩ or above
B	0 to 5 VDC	
C	0 to 10 VDC	4 kΩ or above
H	4 to 20 mADC	550 Ω or less
K	±10 VDC	4 kΩ or above (negative output 10 kΩ or above)
Z	Other than the above	

Z specification production range
Voltage output: -12 to +15 VDC, minimum span 0 to 60 mVDC
Current output: 0 to 20 mADC, minimum span 0 to 1 mADC

● General specifications

Reference accuracy: ±0.1% FS (25°C±2°C)
Power fluctuation: ±0.06% FS
Load fluctuation: ±0.06% FS
Temperature characteristics: ±0.02% FS/°C
Response time: 50 ms or less (0→90%)
Setting change error: ±2% or less (factory setting 0 to 100%)
VR variable width: ±5% FS or above (zero, span)
Isolation resistance: 100 MΩ or above (500 VDC) between input - output - power supply
Withstand voltage: 1500 VAC for 1 minute between input - output - power supply
Auxiliary power supply: 100 to 240 VAC±10%
Current consumption: 30 mA or less (100 VAC)
Operating ambient temperature: -5 to 50°C
Operating ambient humidity: 90%RH or less (no condensation)
Storage temperature: -10 to 70°C
Storage humidity: 25 to 60% RH (no condensation)
Reference voltage: 0.5 V
Mass: approx. 80 g

■ Type (= Product Code) description

WF2PM-□□ □ 6

Input signal

01	100 Ω to 10 kΩ
ZZ	Specified Ω to specified Ω

Auxiliary power supply

6	100 to 240 VAC±10%

Output signal

A	1 to 5 VDC
B	0 to 5 VDC
C	0 to 10 VDC
H	4 to 20 mADC
K	±10 VDC
Z	Other than the above

■ External dimensions [unit: mm]

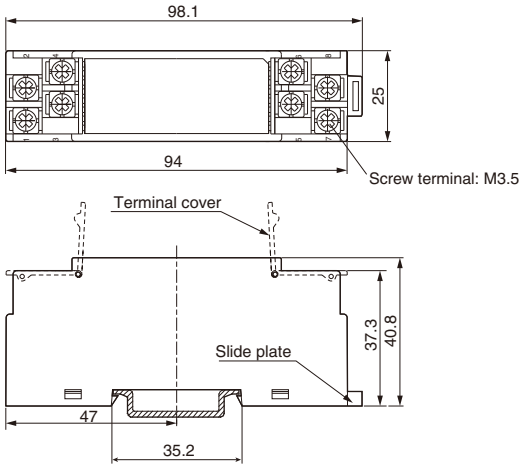

■ External connection diagram

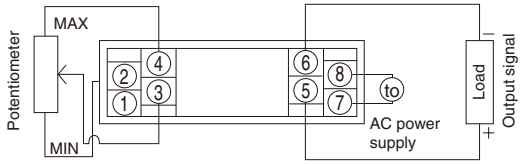

⚠ CAUTION Pay attention to the connection polarity

■ Block diagram

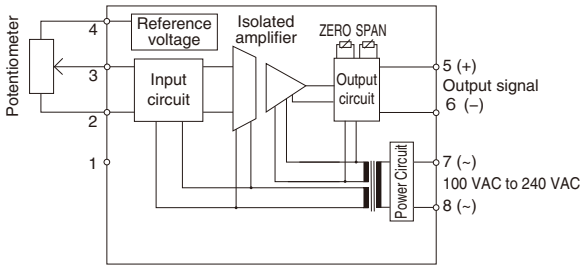

Transducers
Multi-range DC isolation transducer WF3DM Series

■ Features

- By operating the dip switch on the front panel, you can change the combination of the input and output specifications.
- 3-port isolation of input, output and power supply
- One touch mounting on IEC 35 mm rail
- Safe and reliable connection with screw terminal with cover (M3.5)

■ Specifications/Performance

● Input specifications

Input: DC voltage, current

Input signal	Input resistance
0 to 5 VDC	1 MΩ or above
1 to 5 VDC	
0 to 10 VDC	
±5 VDC	
±10 VDC	
0 to 60 mVDC	
4 to 20 mADC	250 Ω
0 to 20 mADC	

● Output specifications

Output: DC voltage, current

Output signal	Allowable load resistance
0 to 5 VDC	2 kΩ or above
1 to 5 VDC	2 kΩ or above
±5 VDC	2 kΩ or above
0 to 10 VDC	4 kΩ or above
±10 VDC	4 kΩ or above
4 to 20 mADC	550 Ω or less
0 to 20 mADC	550 Ω or less

● Input/output range settings

1. Setting and changing the input range

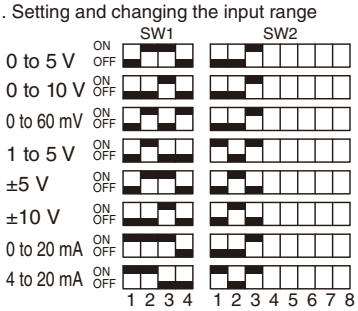

2. Setting and changing the response speed

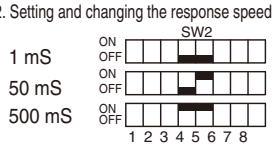

3. Setting and changing reversal (output reversal)

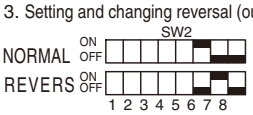

4. Setting and changing the output range

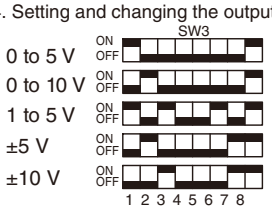

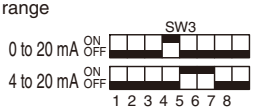

● General specifications

Factory range setting: input 1 to 5 V, output 4 to 20 mA
Factory setting range tolerance: ±0.25% FS or less
Input range setting change error: ±1% FS or less (±2% FS for -5 to 5 V, -10 to 10 V setting)
Output range setting change error: ±1% FS (± 2% FS for -5 to 5 V, -10 to 10 V setting)
Temperature characteristics: ±0.02% FS/°C
Response time: 1 msec, 50 msec, 50 msec (0→90%)
Isolation resistance: 100 MΩ or above (500 VDC) between input - output - power supply
Withstand voltage: 2000 VAC for 1 minute between input - output - power supply
Auxiliary voltage: 100 to 240 VAC±10% or 24 VDC±10%
Current consumption: 50 mA or less (at 100 VAC), 80 mA or less (at 24 VDC)
Operating ambient temperature: -5 to 50°C
Operating ambient humidity: 90%RH or less (no condensation)
Storage temperature: within -10 to 70℃
Storage humidity: 60% RH or less (no condensation)
Mass: approx. 130 g
Accessories: Instruction manual, dip switch sticker, terminal cover

■ Accessories

Instruction Manual

■ Type (= Product Code) description

WF3DM-□ N

Auxiliary power supply

6	100 to 240 VAC
3	24 VDC±10%

■ Block diagram

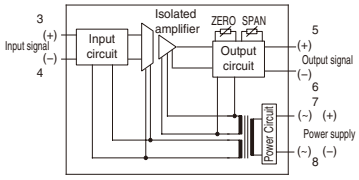

■ External dimensions [unit: mm]

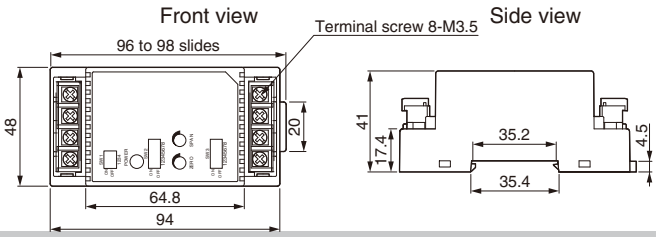

■ External connection diagram

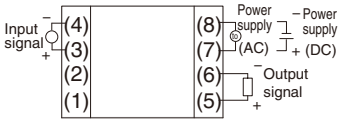

⚠ CAUTION Pay attention to the connection polarity.

Fuji Electric FA Components & Systems Co., Ltd.
Information subject to change without notice

Transducers
Distributor (non-isolated type) WF3DB Series

■ Features

- A product that can be used by combining with a 2-wire transmitter.
- Isolation between input/output and power supply (non-isolated between input and output)
- One touch mounting on IEC 35 mm rail
- Safe and reliable connection with screw terminal with cover (M3.5)

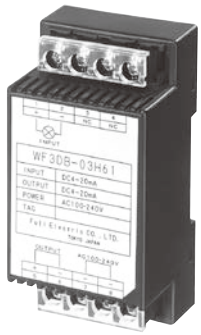

(No.AF02-154)

■ Specifications/Performance

● Connection transmitter

	Input signal
2 wire transmitter	4 to 20 mA

● General specifications

Isolation resistance: 100 MΩ or above (500 VDC) between input/output - power supply
Withstand voltage: 2000 VAC for 1 minute between input/output - power supply
Auxiliary power supply: 100 VAC to 240 VAC±10%
Current consumption: 30 mA or less
Operating ambient temperature: -5 to 50°C
Operating ambient humidity: 90%RH or less (no condensation)
Storage temperature: -10 to 70°C
Storage humidity: 90% RH or less (no condensation)
Mass: approx. 110 g

■ 2-wire transmitter power supply specification

Output voltage: 24±2 VDC (at no load)
Power supply capacity: 22 mADC or less
Short-circuit current: 30 mA or less
Short-circuit time: Infinite
Accessories: Instruction manual, terminal cover

■ Type (= Product Code) description

WF3DB-03 H 6 1

Power supply voltage for transmitter

03	24 V±2 VDC

Design rank

Auxiliary power supply

6	100 to 240 VAC±10%

Output signal

H	4 to 20 mADC

■ External connection diagram

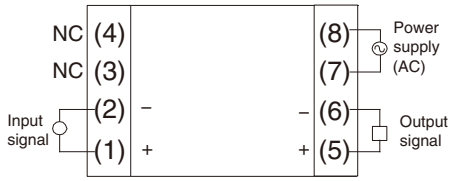

⚠ CAUTION Pay attention to the connection polarity.

■ Block diagram

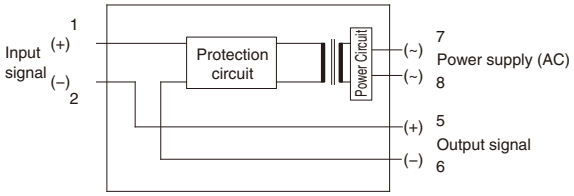

■ External dimensions [unit: mm]

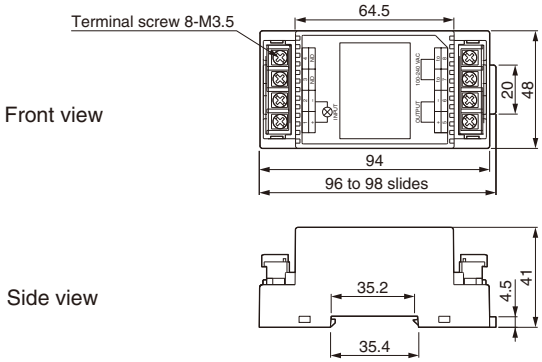

Transducers
Load cell transducer WF3LC Series

■ Features

- Convert load cell input signal to unified signal, etc.
- 3-port isolation of input, output and power supply
- One touch mounting on IEC 35 mm rail
- Reduced connection time by adopting pressed terminal block

(No.AF03-15)

■ Specifications/Performance

● Input specifications

Load cell: Strain gauge type sensors (350 Ω)

Code No.	Load cell compatible range
04	1 to 4 mV/V
ZZ	Other than the above

Applied voltage for load cell

Code No.	Applied voltage
1	5 V
2	10 V
3	2.5 V

● Output specifications

Code No.	Output signal	Output load resistance
A	1 to 5 VDC	2 kΩ or above
B	0 to 5 VDC	
C	0 to 10 VDC	4 kΩ or above
H	4 to 20 mVDC	550 Ω or less
P	0 to 20 mVDC	
Z	Other than the above	

Z specification production range
Voltage output: 10 VDC or less, minimum span 0 to 1 VDC
Current output: 20 mADC or less, minimum span 0 to 1 mADC

● General specifications

Allowable tolerance: ±0.25% FS (25°C±2°C)
Temperature characteristics: ±0.03% FS/°C
Response speed: 10 msec or less (0→90%)
Isolation resistance: 100 MΩ or above (500 VDC) between input - output - power supply
Withstand voltage: 1500 VAC for 1 minute between input - output - power supply
Leak current 2 mA
Auxiliary power supply: 24 VDC±10%
Current consumption: 120 mA or less
Operating ambient temperature: -5 to 50°C
Operating ambient humidity: 90%RH or less (no condensation)
Storage temperature: -10 to 70°C
Storage humidity: 60% RH or less (no condensation)
Mass: approx. 120 g
Accessories: Instruction manual, terminal cover, removable type 6P connector

■ Type (= Product Code) description

WF3LC-04 □ □ 3 1

Input load cell

04	1 to 4 mV/V
ZZ	Other than the above

Applied voltage

1	5 VDC
2	10 VDC
3	2.5 VDC

Output signal

A	1 to 5 VDC
B	0 to 5 VDC
C	0 to 10 VDC
H	4 to 20 mADC
P	0 to 20 mADC
Z	Other than the above

Auxiliary power supply

3	24 VDC±10%

Design rank

■ External dimensions [unit: mm]

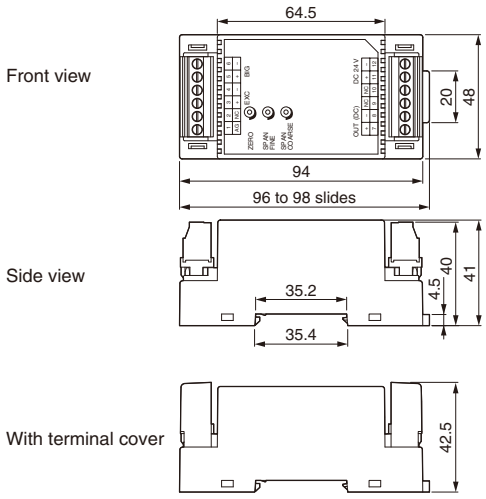

■ Block diagram

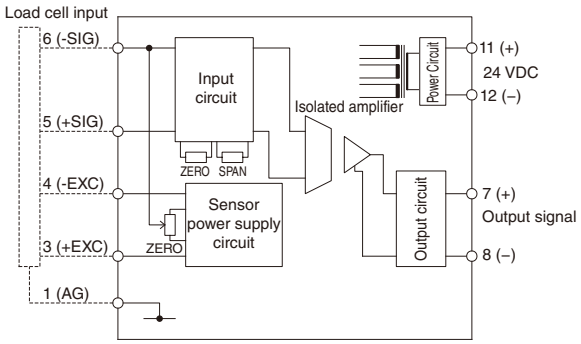

■ External connection diagram

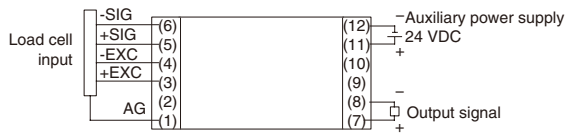

■ Features

- A 2 output type model of WF1DC type.
- 4-port isolation of input, output 1, output 2, power supply
- One touch mounting on IEC 35 mm rail
- Safe and reliable connection with screw terminal with cover (M3.5)

■ Specifications/Performance

● Input specifications

Code No.	Input signal	Input resistance
13	0 to 5 VDC	1 MΩ or above
14	0 to 10 VDC	
15	1 to 5 VDC	
16	4 to 20 mADC	250 Ω
22	0 to 20 mADC	

● First output specifications

Code No.	Output signal	Load resistance
H	4 to 20 mADC	550 Ω or less

● Second output specification

Code No.	Output signal	Load resistance
A	1 to 5 VDC	2 kΩ or above
B	0 to 5 VDC	
C	0 to 10 VDC	4 kΩ or above
H	4 to 20 mADC	550 Ω or less
P	0 to 20 mADC	

● General specifications
Allowable tolerance: ±0.1% FS
Temperature characteristics: ±0.02% FS/°C
Response time: 50 msec or less (0→90%)
Isolation resistance: 100 MΩ or above between input - output 1 - output 2 - power supply (500 VDC)
Withstand voltage: 2000 VAC for 1 minute between input - output 1 - output 2 - power supply
Auxiliary power supply: 24 VDC±10%
Current consumption: 110 mA or less
Operating ambient temperature: -5 to 50°C
Operating ambient humidity: 90%RH or less (no condensation)
Storage temperature: -10 to 70°C
Storage humidity: 60% RH or less (no condensation)
Mass: approx. 130 g
Accessories: Instruction manual, terminal cover

■ External connection diagram

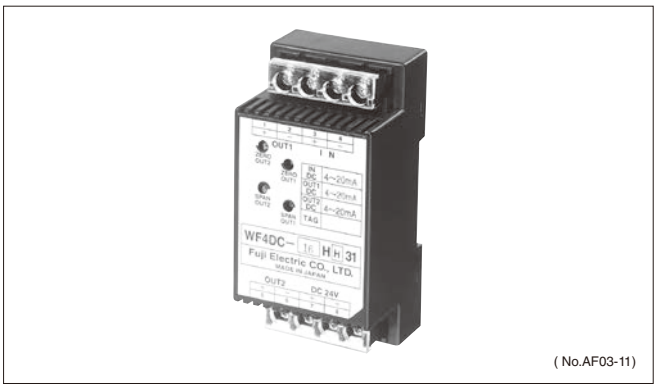

■ Type (= Product Code) description

WF4DC-□□ □□ 3 1

Input signal

13	0 to 5 VDC
14	0 to 10 VDC
15	1 to 5 VDC
16	4 to 20 mADC
22	0 to 20 mADC

First output signal

H	4 to 20 mADC

Design rank

Auxiliary power supply

3	24 VDC±10%

Second output signal

A	1 to 5 VDC
B	0 to 5 VDC
C	0 to 10 VDC
H	4 to 20 mADC
P	0 to 20 mADC

■ External dimensions [unit: mm]

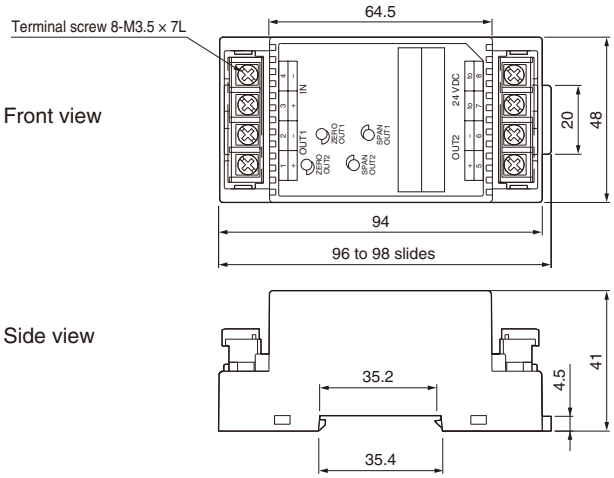

■ Block diagram

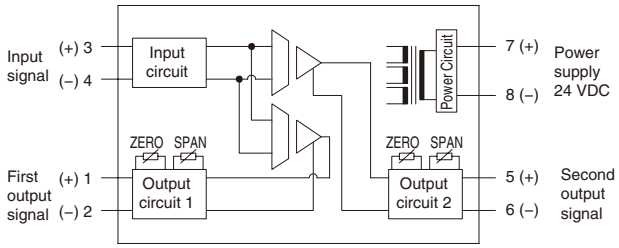

Transducers
2 output Thermocouple transducer WF4TC Series

■ Features

- A 2 output type model of WF1TC, WF3TC type. It is possible to select an AC power supply item.
- 4-port isolation for input, output, power supply, alarm
- One touch mounting on IEC 35 mm rail
- Reduced connection time by adopting pressed type terminal block
- Features an upper limit burnout function.

(No.AF03-10)

■ Specifications/Performance

● Input specifications

Sensor	Code No.	Input temperature range (°C)
J	J18	0 to 1000
K	K19	0 to 1200
R	R32	0 to 1700
S	S32	0 to 1700
T	T13	0 to 350
B	B26	200 to 1700
E	E37	0 to 900
Special	ZZZ	Specified

Cold contact compensation accuracy: ±1°C (at 10 to 30°C) *other than B thermocouple

● Output specifications

[First output]

Code No.	Output signal	Load resistance	Output at burnout
H	4 to 20 mADC	550 Ω or less	Approx. 120% FS

[Second output]

Code No.	Output signal	Load resistance	Output at burnout
A	1 to 5 VDC	2 kΩ or above	Approx. 120% FS
B	0 to 5 VDC		
C	0 to 10 VDC	4 kΩ or above	
H	4 to 20 mADC	500 Ω or less	

● General specifications

Tolerance: ±0.25% FS
Temperature characteristics: ±0.02% FS/°C
Response speed: 2 sec or less (0→90%)
Isolation resistance: 100 MΩ or above (500 VDC) between input - output - power supply
Withstand voltage: 1500 VAC for 1 minute between input - output - power supply
Auxiliary power supply: 100 to 240 VAC±10% or 24 VDC±10%
Current consumption: DC power supply: 110 mA or less/AC power supply: 50 mA or less
Operating ambient temperature: -5 to 50°C
Operating ambient humidity: 90%RH or less (no condensation)
Storage temperature: -10 to 70°C
Storage humidity: 60% RH or less (no condensation)
Mass: approx. 160 g
Accessories: Instruction manual, terminal cover, removable type 6P connector

■ External connection diagram

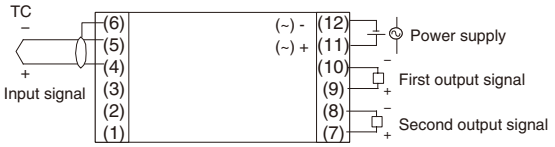

■ Type (= Product Code) description

WF4TC-□□□ □ □ □ 1

Input thermocouple

K19	0 to 1200°C K thermocouple
J18	0 to 1000°C J thermocouple
T13	0 to 350°C T thermocouple
B26	200 to 1700°C B thermocouple
R32	0 to 1700°C R thermocouple
S32	0 to 1700°C S thermocouple
E37	0 to 900°C E thermocouple

First output signal

H	4 to 20 mADC

Second output signal

A	1 to 5 VDC
B	0 to 5 VDC
C	0 to 10 VDC
H	4 to 20 mADC

Auxiliary power supply

3	24 VDC±10%
6	100 to 240 VAC±10%

Design rank

■ External dimensions [unit: mm]

Front view

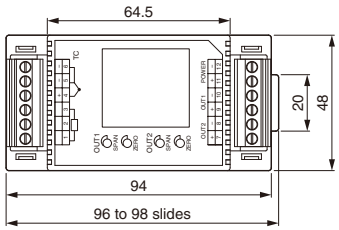

Side view

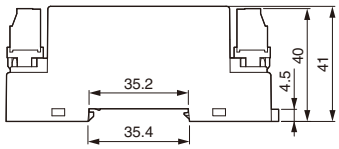

With terminal cover

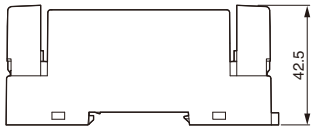

■ Block diagram

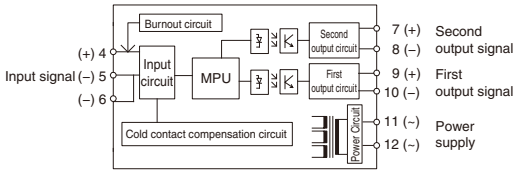

2 output resistance temperature sensor transducer WF4PT Series

■ Features

- A 2 output type model of WF1PT, WF3PT type. It is possible to select an AC power supply item.
- 4-port isolation for input, output 1, output 2, power supply, alarm
- One touch mounting on IEC 35 mm rail
- Reduced connection time by adopting pressed terminal block
- Features an upper limit burnout function.

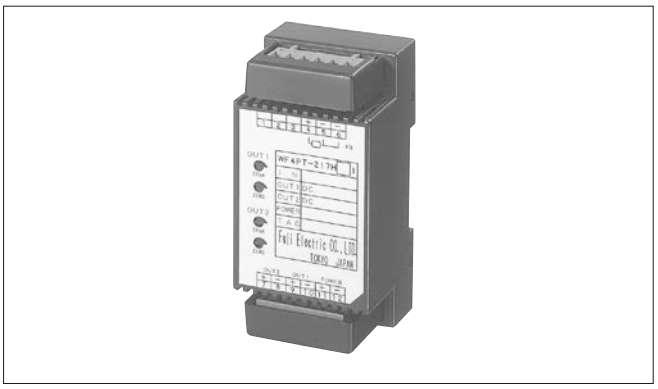

■ Specifications/Performance

● Input specifications

Sensor	Code No.	Manufacturing range (°C)
Pt100 Ω	217	0 to 800

● Output specifications

[First output]

Code No.	Output signal	Load resistance	Output at burnout
H	4 to 20 mADC	550 Ω or less	Approx. 120% FS

[Second output]

Code No.	Output signal	Load resistance	Output at burnout
A	1 to 5 VDC	2 kΩ or above	Approx. 120% FS
B	0 to 5 VDC		
C	0 to 10 VDC	4 kΩ or above	
H	4 to 20 mADC	500 Ω or less	

● General specifications

Allowable tolerance: ±0.25% FS
Temperature characteristics: ±0.02% FS/°C
Response speed: 2 sec or less (0→90%)
Isolation resistance: 100 MΩ or above (500 VDC) between input - output - power supply
Withstand voltage: 1500 VAC for 1 minute between input - output - power supply
Auxiliary power supply: 100 to 240 VAC±10% or 24 VDC±10%
Current consumption: DC power supply: 110 mA or less/AC power supply: 50 mA or less
Operating ambient temperature: -5 to 50°C
Operating ambient humidity: 90%RH or less (no condensation)
Storage temperature: -10 to 70°C
Storage humidity: 60% RH or less (no condensation)
Mass: approx. 160 g
Accessories: Instruction manual, terminal cover, removable type 6P connector

■ External connection diagram

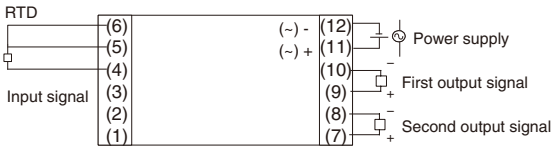

■ Block diagram

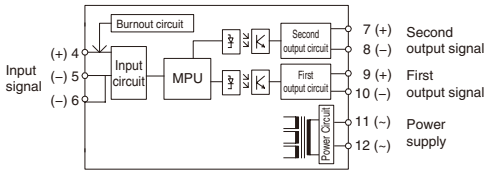

■ Type (= Product Code) description

WF4PT- 217 □ □ □ 1

Input resistance temperature sensor

217	0 to 400°C PT100 Ω

First output signal

H	4 to 20 mADC

Second output signal

A	1 to 5 VDC
B	0 to 5 VDC
C	0 to 10 VDC
H	4 to 20 mADC

Auxiliary power supply

3	24 VDC±10%
6	100 to 240 VAC±10%

Design rank

■ External dimensions [unit: mm]

Front view

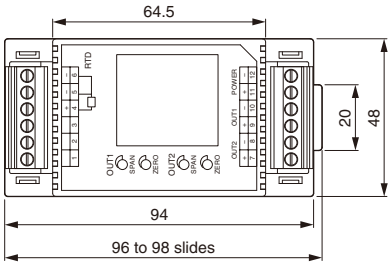

Side view

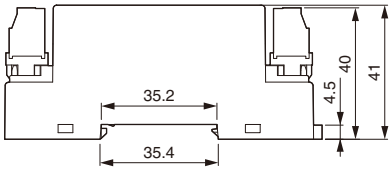

With terminal cover

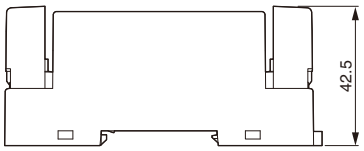

Transducers
2 output Potentiometer transducer WF4PM Series

■ Features

- A 2 output type model of WF1PM type.
- If the resistance value is within the range of 100 Ω to 10 kΩ, the resistance value of the potentiometer can be used regardless.
- 4-port isolation for input, output, power supply, alarm
- One touch mounting on IEC 35 mm rail
- Reduced connection time by adopting pressed terminal block

■ Specifications/Performance

● Input specifications

Input: Potentiometer resistance value: Total resistance value 100 Ω to 10 kΩ

* When using the total resistance value (0 to 100%), it can be used without adjustment.

When using at a value other than 0 to 100%, please specify the resistance value of the potentiometer and the range to be used as a percentage.

● First output specifications

Code No.	Output signal	Load resistance
H	4 to 20 mADC	550 Ω or less

● Second output specifications

Code No.	Output signal	Load resistance
A	1 to 5 VDC	2 kΩ or above
B	0 to 5 VDC	
C	0 to 10 VDC	4 kΩ or above
H	4 to 20 mADC	550 Ω or less
P	0 to 20 mADC	

● General specifications

Tolerance: ±0.25% FS (25°C±2°C)
Temperature characteristics: ±0.02% FS/°C
Response speed: 50 msec or less (0→90%)
Isolation resistance: 100 MΩ or above between input - output 1 - output 2 - power supply (500 VDC)
Withstand voltage: 2000 VAC for 1 minute between input - output 1 - output 2 - power supply
Auxiliary power supply: 24 VDC±10%
Current consumption: 120 mA or less
Operating ambient temperature: -5 to 50°C
Operating ambient humidity: 90%RH or less (no condensation)
Storage temperature: within -10 to +70°C
Storage humidity: 60% RH or less (no condensation)
Mass: approx. 130 g
Reference voltage: 0.5 V

■ External connection diagram

⚠ Note 1) Please pay attention to connection polarity.
Note 2) To prevent incorrect insertion, detachable type 6P connectors contain a key for preventing erroneous insertion on pin 10.

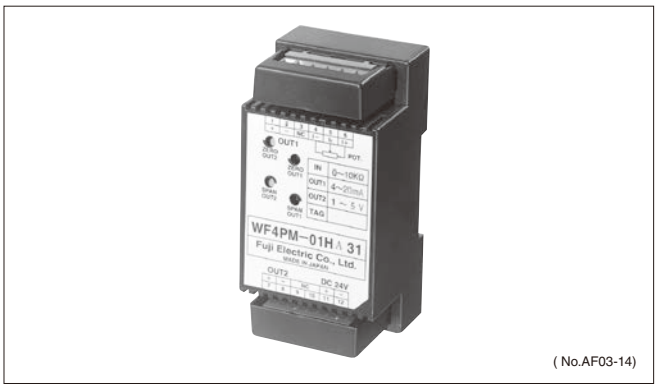

■ Type (= Product Code) description

WF4PM-01 □ □ 3 1

Input signal

01	100 Ω to 10 kΩ

First output signal

H	4 to 20 mADC

Second output signal

A	1 to 5 VDC
B	0 to 5 VDC
C	0 to 10 VDC
H	4 to 20 mADC
P	0 to 20 mADC

Auxiliary power supply

3	24 VDC±10%

Design rank

■ External dimensions [unit: mm]

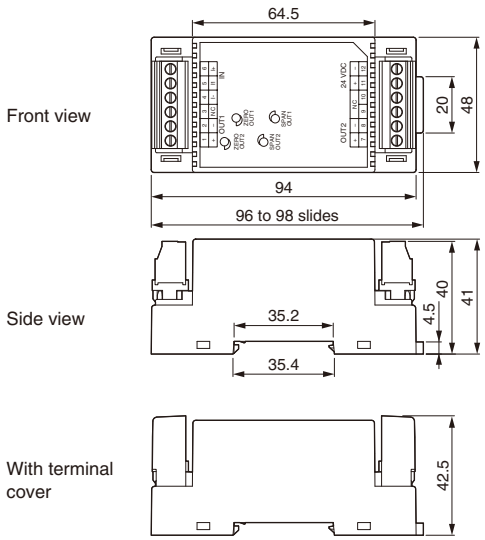

■ Block diagram

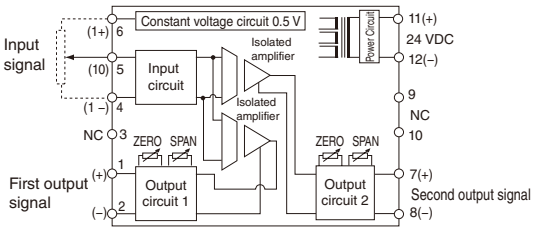

■ Features

- A model that houses the functions of the WF3DC type in a width of 12.5 mm.
- By operating the dip switch on the side of the main unit, you can change the combination of the input and output specifications.
- 3-port isolation of input, output and power supply
- One touch mounting on IEC 35 mm rail
- Reduced connection time by adopting pressed terminal block

■ Specifications/performance

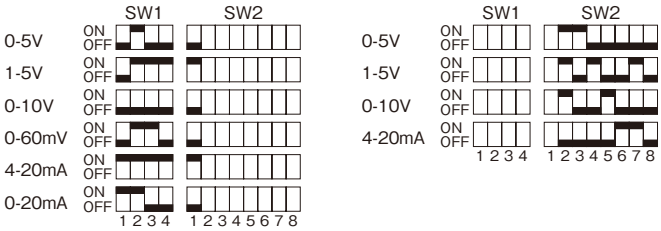

● General specifications

Factory range setting: input 1 to 5 V, output 4 to 20 mA
Factory setting range tolerance: ±0.1% FS (at 25°C±2°C)
Input range setting change error: ±1% FS
Output range setting change error: ±1% FS (However, ± 2% FS for -5 to 5 V, -10 to 10 V setting)
Temperature characteristics: ±0.02% FS/°C
Response speed: 10 ms or less (0→90%)
Isolation resistance: 100 MΩ or above (500 VDC) between input - output - power supply
Withstand voltage: 1500 VAC for 1 minute between input - output - power supply
Auxiliary power supply: 24 VDC±10%
Current consumption: 60 mA or less
Operating ambient temperature: -5 to 50°C
Operating ambient humidity: 90%RH or less (no condensation)
Storage temperature: Within -10 to 70°C
Storage humidity: 25 to 85% RH (no condensation)
External dimensions: 90 mm (H) × 12.5 mm (W) × 115 mm (D)
Mass: approx. 80 g
Conforms to: EN61326-1: 2006, EMI: class A
EMS: Industrial facilities (applicable for cable length of 30 m or less)
Accessories: dip switch sticker × 1, instruction manual, power supply connection metal fitting × 2 (please use when connecting multiple units)

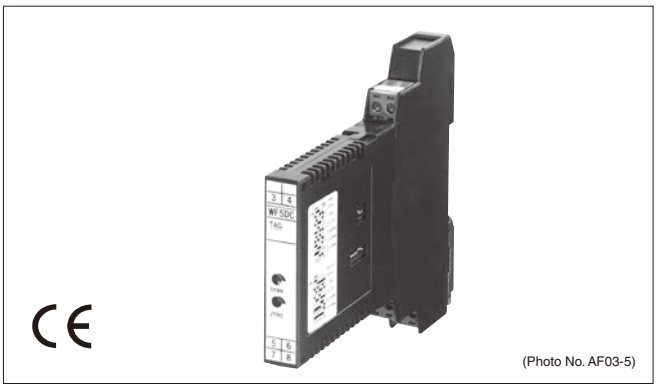

■ Type (= Product Code) description

WF5DC-15 H 3 1

Input signal

15	1 to 5V DC (Setting before delivery)

Design order

External power supply

3	24V DC±10%

Output signal

H	4 to 20mA DC (Setting before delivery)

■ External dimensions [unit: mm]

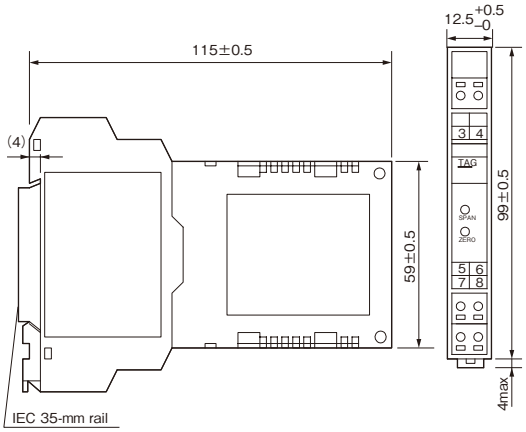

■ External connection diagram Note) Note the connection polarity.

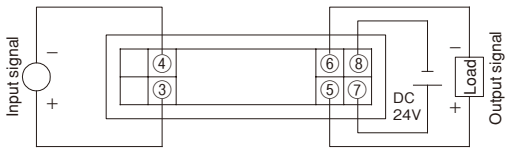

■ Block diagram

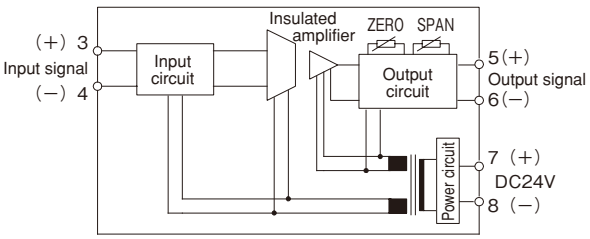

Transducers
DC isolation transducer (high-speed isolator) WF5HS Series

■ Features

- A model that houses the functions of WF1HS in a width of 12.5 mm.
- 3-port isolation of input, output and power supply
- One touch mounting on IEC 35 mm rail
- Reduced connection time by adopting pressed terminal block
- Reverse output products can also be manufactured.

■ Specifications/Performance

● Input specifications
Input: DC voltage/current

Code No.	Input signal	Input resistance
11	0 to 100 mVDC	1 MΩ or above
12	0 to 1 VDC	
13	0 to 5 VDC	
14	0 to 10 VDC	
15	1 to 5 VDC	
16	4 to 20 mADC	250 Ω
24	±10 VDC	1 MΩ or above
Z	Other than the above	

Z specification production range
Voltage input: ±250 VDC or less, minimum span 0 to 60 mVDC
Current input: ±50 mADC or less, minimum span 0 to 1 mADC

● Output specifications
Output: DC voltage/current

Code No.	Output signal	Allowable load resistance
A	1 to 5 VDC	2 kΩ or above
B	0 to 5 VDC	
C	0 to 10 VDC	10 kΩ or above
K	±10 VDC	
H	4 to 20 mADC	550 Ω or less
Z	Other than the above	

Z specification production range
Voltage output: ±10 VDC or less, minimum span 60 mVDC
Current output: 0 to 20 mADC or less, minimum span 1 mADC

● General specifications
Tolerance: ±0.1% FS (25°C±2°C)
Temperature characteristics: ±0.02% FS/°C
Response speed: 1 ms or less (0→90%)
Isolation resistance: 100 MΩ or above (500 VDC) between input - output - power supply
Withstand voltage: 1500 VAC for 1 minute between input - output - power supply
Auxiliary power supply: 24 VDC±10%
Current consumption: 50 mA or less
Operating ambient temperature: -5 to 50°C
Operating ambient humidity: 90%RH or less (no condensation)
Mass: approx. 80 g
Accessories: Instruction manual, power supply connection metal fittings×2
(Please use when connecting more than one unit)

■ Block diagram

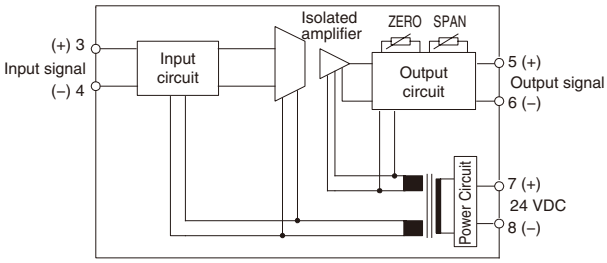

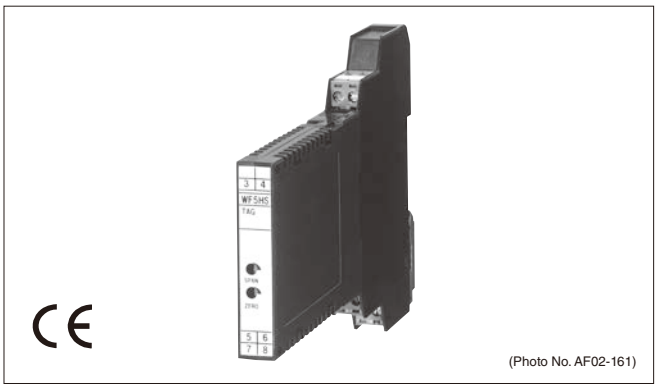

■ Type (= Product Code) description

WF5HS-□□ □ 3 1

Input signal

11	0 to 100 mVDC
12	0 to 1 VDC
13	0 to 5 VDC
14	0 to 10 VDC
15	1 to 5 VDC
24	±10 VDC
16	4 to 20 mADC
ZZ	Other than the above

Design rank

Auxiliary power supply

3	24 VDC±10%

Output signal

A	1 to 5 VDC
B	0 to 5 VDC
C	0 to 10 VDC
K	±10 VDC
H	4 to 20 mADC
Z	Other than the above

■ External dimensions [unit: mm]

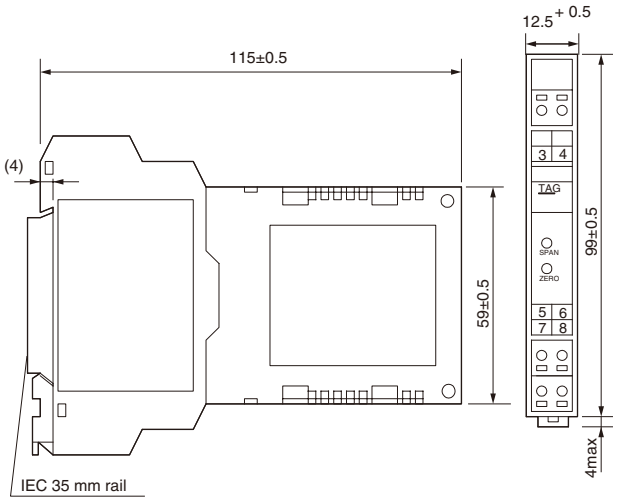

■ External connection diagram

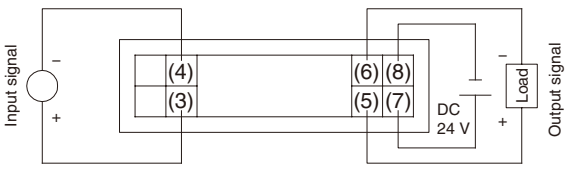

■ Features

- A model that houses the functions of WF1DU in a width of 12.5 mm.
- 3-port isolation of input, output and power supply
- One touch mounting on IEC 35 mm rail
- Reduced connection time by adopting pressed terminal block

■ Specifications/Performance

● Input specifications
Input: DC voltage/current

Code No.	Input signal	Input resistance
10	0 to 10 mVDC	1 MΩ or above
23	0 to 50 mVDC	
26	0 to 60 mVDC	
27	0 to 100 μADC	1 kΩ
ZZ	Other than the above	

Z specification production range
Voltage input: ±100 mVDC, minimum span 0 to 5 mVDC
Current input: ±5 mADC, minimum span 0 to 10 μADC

● Output specifications
Output: DC voltage/current

Code No.	Output signal	Allowable load resistance
A	1 to 5 VDC	2 kΩ or above
B	0 to 5 VDC	
C	0 to 10 VDC	10 kΩ or above
K	±10 VDC	
H	4 to 20 mADC	550 Ω or less
Z	Other than the above	

Z specification production range
Voltage output: ±10 VDC or less, minimum span 0 to 60 mVDC
Current output: 0 to 20 mADC, minimum span 0 to 1 mADC

● General specifications
Allowable tolerance: ±0.1% FS (25°C±2°C)
Temperature characteristics: ±0.02% FS/°C
Response speed: 50 ms or less (0→90%)
Isolation resistance: 100 MΩ or above (500 VDC) between input - output - power supply
Withstand voltage: 1500 VAC for 1 minute between input - output - power supply
Auxiliary power supply: 24 VDC±10%
Current consumption: 50 mA or less
Operating ambient temperature: -5 to 50°C
Operating ambient humidity: 90%RH or less (no condensation)
Storage temperature: -10 to 70°C
Storage humidity: 25 to 60% RH (no condensation)
Mass: approx. 80 g
Accessories: Instruction manual, power supply connection metal fittings×2
(Please use when connecting more than one unit)

■ Block diagram

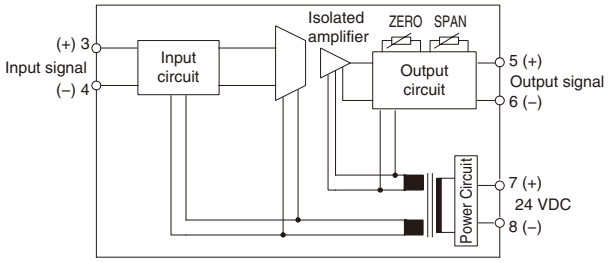

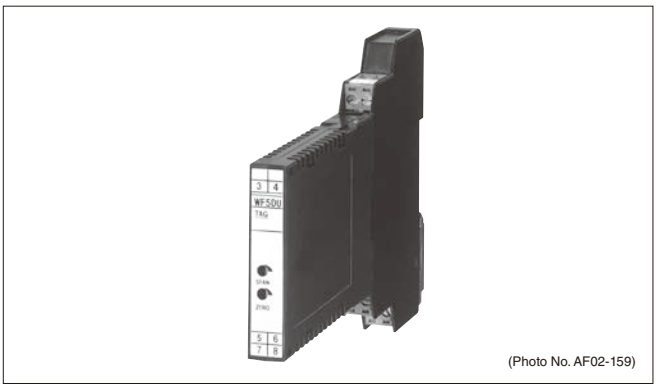
(Photo No. AF02-159)

■ Type (= Product Code) description

WF5DU-□□ □ 3 1

Input signal

10	0 to 10 mVDC
23	0 to 50 mVDC
26	0 to 60 mVDC
27	0 to 100 μADC
ZZ	Other than the above

Design rank

Auxiliary power supply

3	24 VDC±10%

Output signal

A	1 to 5 VDC
B	0 to 5 VDC
C	0 to 10 VDC
K	±10 VDC
H	4 to 20 mADC

■ External dimensions [unit: mm]

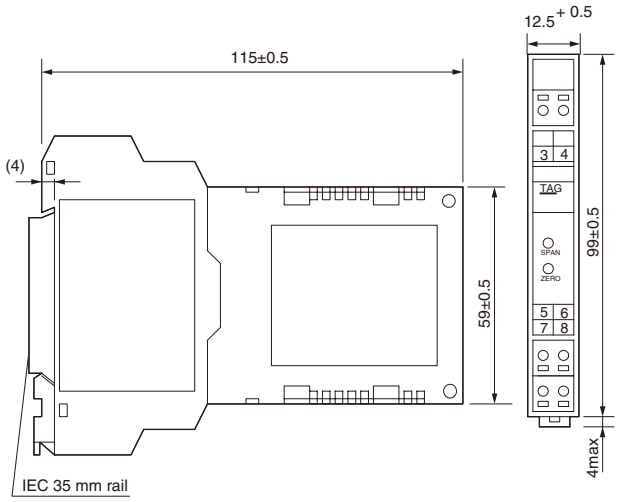

■ External connection diagram

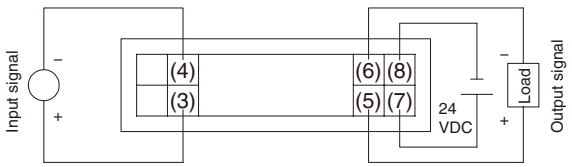

Transducers
Potentiometer transducer WF5PM Series

■ Features

- A model that houses the functions of WF1PM in a width of 12.5 mm.
- If the resistance value is within the range of 100 Ω to 10 kΩ, the resistance value of the potentiometer can be used regardless.
- 3-port isolation of input, output and power supply
- One touch mounting on IEC 35 mm rail
- Reduced connection time by adopting pressed terminal block

■ Specifications/Performance

● Input specifications

Input: Potentiometer resistance value: Total resistance value 100 Ω to 10 kΩ

* When using the total resistance value (0 to 100%), it can be used without adjustment.

It is possible to change the input range with the built-in dip switch.

Minimum span: 50% or above of the total resistance value

Code No.	Output signal	Allowable load resistance
A	1 to 5 VDC	2 kΩ or above
B	0 to 5 VDC	
C	0 to 10 VDC	4 kΩ or above
K	±10 VDC	
H	4 to 20 mADC	550 Ω or less
Z	Other than the above	

Z specification manufacturing range
Voltage output: ±10 VDC or less, minimum span 0 to 1 VDC
Current output: 0 to 20 mADC, minimum span 0 to 1 mADC

● General specifications

Tolerance: ±0.1% FS
Temperature characteristics: ±0.02% FS/°C
Response speed: 50 ms or less (0→90%)
Isolation resistance: 100 MΩ or above (500 VDC) between input - output - power supply
Withstand voltage: 1500 VAC for 1 minute between input - output - power supply
Auxiliary power supply: 24 VDC±10%
Current consumption: 50 mA or less
Operating ambient temperature: -5 to 50°C
Operating ambient humidity: 90%RH or less (no condensation)
Storage temperature: -10 to 70°C
Storage humidity: 25 to 85% RH (no condensation)
Mass: approx. 130 g
Reference voltage: 0.5 V
Zero adjustment range: 0 to 5% of total resistance value
Span adjustment range: 80 to 100% of total resistance value
Accessories: Instruction manual, power supply connection metal fittings×2 (Please use when connecting more than one unit)

■ Block diagram

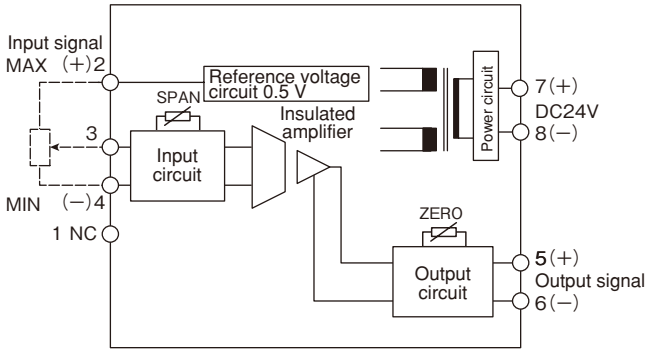

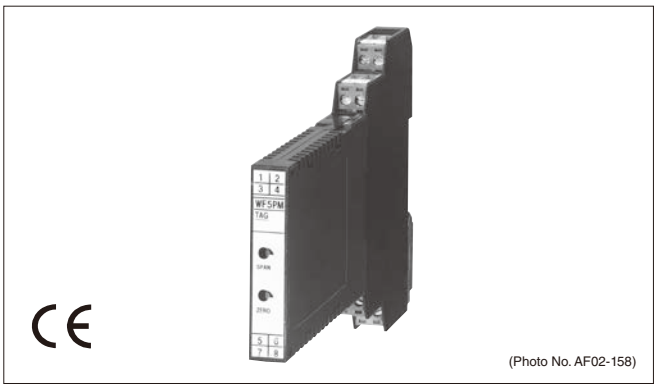

■ Type (= Product Code) description

WF5PM-01 □ 3 1

Input signal

01	100Ω to 10kΩ

Output signal

A	1 to 5V DC
B	0 to 5V DC
C	0 to 10V DC
K	−10 to 10V DC
H	4 to 20mA DC
Z	Other than ranges listed above

Design order

External power supply

3	24V DC±10%

■ External dimensions [unit: mm]

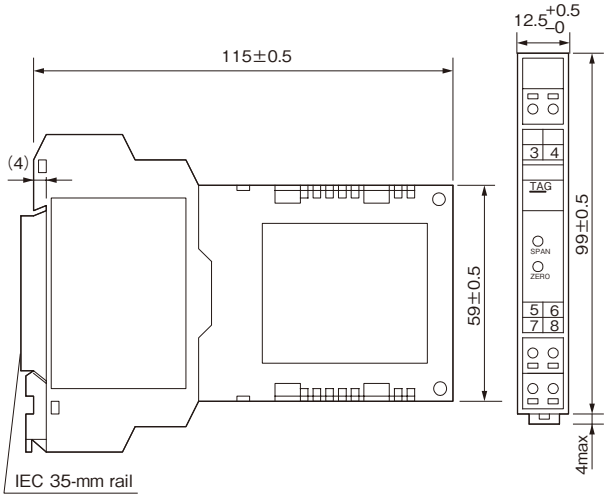

■ External connection diagram

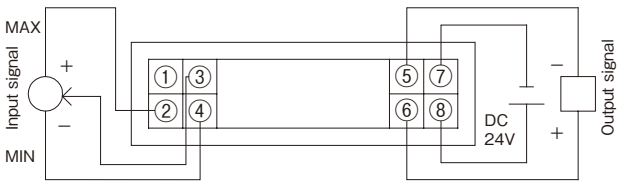

Fuji Electric FA Components & Systems Co., Ltd.
Information subject to change without notice

SPD for low voltage power supply circuit (In 5 kA product) CN56 series

■ Features

Ideal as a lightning surge measure for power supply circuits
Protects against lightning surges in a compact and economical way.

- **All models include operating indicator light**
  Including the 400 V product, the green LED is lit when operation is normal. When the SPD reaches the end of its life, the LED turns off.
- **GDT mounted between N-E** (GDT: gas-filled discharge tube)
  Conforms to Annex K Figure K.3 of IEC 61643-12
- **3-pole integrated terminal structure**
  Space saving and wiring saving and easy to operate.
- **Conforms to the Public Building Construction Standard Specifications.**
- **IEC 61643-11 compatible product**
  Under the JIS standard for SPDs established on 2011, a combination test with an SPD separator is required.
  Always combine with a plug-in type fuse.
- **IEC 35 mm rail mounting, screw mounting, and mounting plate mounting for agreement electrical distribution switchboard is possible.**

■ Application examples

For protection of equipment connected to switchboards, electrical distribution switchboards, monitoring boards, and power supply circuits of control panel internal equipment

1. Protection of electronic equipment such as computers, measuring equipment, and communication equipment
2. Protection of inverters and UPSs
3. Power supply protection for fire alarms, monitoring devices, and broadcast devices, etc.

■ SPD model selection table

Nominal discharge current In (8/20 μs)			5 kA
100/200 VAC series	For single-phase	Two-wire system	CN5612
		Three-wire system	CN5632
	For three-phase	Three-wire system	
400 VAC series	For three-phase	Three-wire system	CN5634
		Four-wire system	

■ Examples of circuits used

●Single phase (100 VAC / 200 VAC)

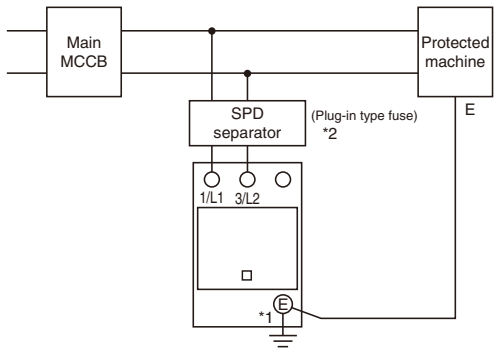

●Single phase 3-wire (100 VAC / 200 VAC)

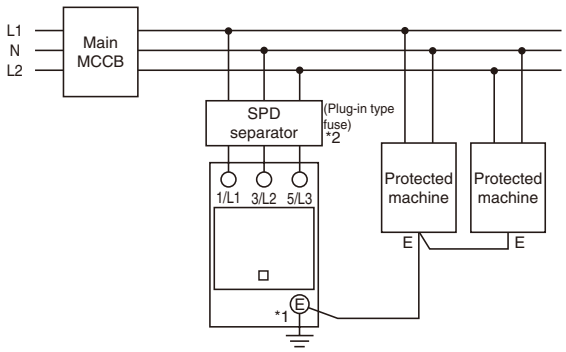

●Three-phase (3-wire 200 VAC / 415 VAC, 4-wire 100 VAC / 173 VAC / 240 VAC / 415 VAC)

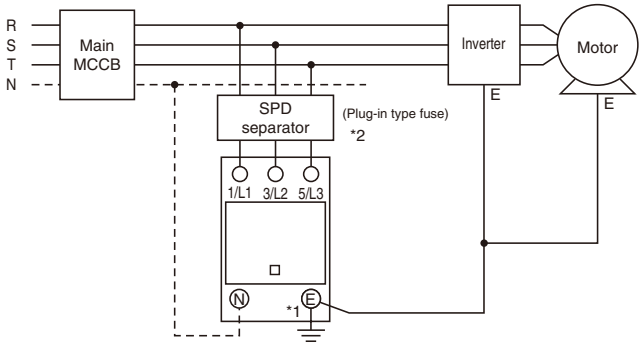

(CN5632/CN5632-K: G terminal, CN5634/CN5634-K: N terminal)

*1 Connect the wiring to the SPD with the shortest distance.
*2 Always use AFaC-30X as an SPD separator.

Surge Protective Device
CN56 series

■ Ratings and specifications

● Integrated type

Type		CN5612	CN5632	CN5634	CN5612-K	CN5632-K	CN5634-K
		No alarm switch	No alarm switch	No alarm switch	With alarm switch	With alarm switch	With alarm switch
Test class		JIS C 5381-11 Class II / IEC 61643-11 Class II					
Applied circuit		Single-phase two-wire, 100 V Single-phase two-wire, 200 V	Single-phase three-wire, 100 V / 200 V Three-phase three-wire, 200 V Three-phase four-wire, 100 V / 173 V	Three-phase three-wire, 415 V Three-phase four-wire, 240 V / 415 V	Single-phase two-wire, 100 V Single-phase two-wire, 200 V	Single-phase three-wire, 100 V / 200 V Three-phase three-wire, 200 V Three-phase four-wire, 100 V / 173 V	Three-phase three-wire, 415 V Three-phase four-wire, 240 V / 415 V
Max. continuous operating voltage Uc		280 VAC		460 VAC	280 VAC		460 VAC
Nominal discharge current In 8/20 µs		5 kA					
Maximum discharge current Imax 8/20 µs		10 kA					
Voltage protection level Up		1.5 kV		2.5 kV	1.5 kV		2.5 kV
Nominal varistor voltage (V1 mA)	Between L-G	470 V ± 10 %		750 V ± 10 %	470 V ± 10 %		750 V ± 10 %
DC discharge start voltage (100 V/s)	Between G-E	600 V to 1100 V					
Total discharge current Itotal	8 / 20 µs	20 kA					
Rated short-circuit current Isccr (When applicable separator connected)		220 VAC 80 kA		440 VAC 100 kA	220 VAC 80 kA		440 VAC 100 kA
Failure display		Normal: LED lit (green) Power failure/fault: LED unlit					
Operating environmental conditions		Temperature: -40°C to +70°C, Relative Humidity: 95% or less, indoors or inside a waterproof panel					
Mounting method		Direct mounting with rail mounting (35 mm width) or mounting metal bracket, mounting plate for agreement electrical distribution switchboard					
IP degree of protection		IP20					
Vibration resistance		Frequency 10 to 55 Hz Amplitude width 0.75 mm (maximum 44 m/s²) 2 hours in each direction (total of 6 hours)					
Shock resistance		196 m/s² 3 times in each direction (total of 18 times)					
Mass [g] *1		170	190	200	190	210	220
Dimensions (L x W x H)		95 x 50 x 60 mm					
Applicable separator		AFaC-30X					

*: L indicates 1 / L1 terminal, 3 / L2 terminal, 5 / L3 terminal.
E indicates the earth terminal.
*1: Mounting metal bracket (about 11 g) is not included in mass.

● Alarm switch specification

Circuit specification	Switch specification	1C contact
	Operation method	Linked with built in thermal fuse
	Connection rating	220 VAC 1 A, 110 VDC 0.5 A
	Connection terminal	Screw-less terminal (plug-in terminal)
	Applicable cable	Solid wire Ø 0.5 mm to Ø 1.2 mm Twisted wire 0.3 mm 2 to 1.25 mm2 AWG24 to 16
Circuit protection	MOV equipment between contact terminals	Pick-up voltage (V1 mA) 480 V ± 10% Lightning surge performance 8/20 µs 3.5 kA
	Contact terminal to earth MOV equipment	Pick-up voltage (V1 mA) 480 V ± 10% Lightning surge performance 8/20 µs 3.5 kA

* MOV: Metal oxide varistor

■ Dimensions

Refer to page D1-149.

⚠ Caution on use

● Be sure to earth.
The earth wire of the SPD has the function of quickly diverting any lightning surge inrush to outside the equipment or facility and discharging it to earth. For that reason, it is important to wire the earth wire used for the power supply SPD with a relatively thick (5.5 mm²) wire to the earth terminal with the shortest distance.
In IEC 62305-4, it is stipulated that in the case of SPD for power supply, a wire of 5.5 mm² or more should be used, and that the earth terminal of the board or equipment should be connected with the shortest distance (0.5 m or less is recommended).

● Use a Fuji plug-in type fuse as an SPD separator (for SPD disconnection and short-circuit protection).

● Remove the fuse when conducting withstand voltage tests and insulation resistance tests on equipment and wiring.If you make a mistake, the SPD will be damaged or a measurement value error will occur.

● Please perform earthing work in accordance with the standards of each country.

SPD for low voltage power supply circuit (In 10 kA product) CN57 series

■ Features

Ideal as a lightning surge measure for power supply circuits
Features lightning surge current withstand capacity twice that of the CN56 series.

- **All models include operating indicator light**
  The green LED is lit when operation is normal.
  When the SPD reaches the end of its life, the LED turns off.
- **GDT mounted between N-E** (GDT: gas-filled discharge tube)
  Conforms to Annex K Figure K.3 of IEC 61643-12
- **3-pole integrated terminal structure**
  Space saving and wiring saving and easy to operate.
- **Conforms to the Public Building Construction Standard Specifications.**
- **IEC 61643-11 compatible product**
  Under the JIS standard for SPDs established on 2011, a combination test with an SPD separator is required.
  Always combine with a plug-in type fuse.
- **IEC 35 mm rail mounting, screw mounting, and mounting plate mounting for the agreement electrical distribution switchboard is possible.**

■ Application examples

For protection of equipment connected to switchboards, electrical distribution switchboards, monitoring boards, and power supply circuits of control panel internal equipment

1. Protection of electronic equipment such as computers, measuring equipment, and communication equipment
2. Protection of inverters and UPSs
3. Power supply protection for fire alarms, monitoring devices, and broadcast devices, etc.

■ SPD model selection table

Nominal discharge current (8/20 μs)			10 kA
100/200 VAC series	For single-phase	Two-wire system	CN5712
		Three-wire system	CN5732
	For three-phase	Three-wire system	

■ Examples of circuits used

●Single phase (100 VAC / 200 VAC)

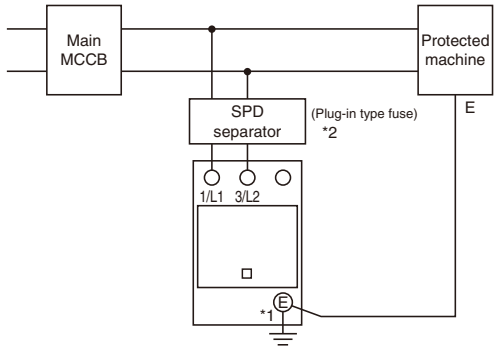

●Single phase 3-wire (100 VAC / 200 VAC)

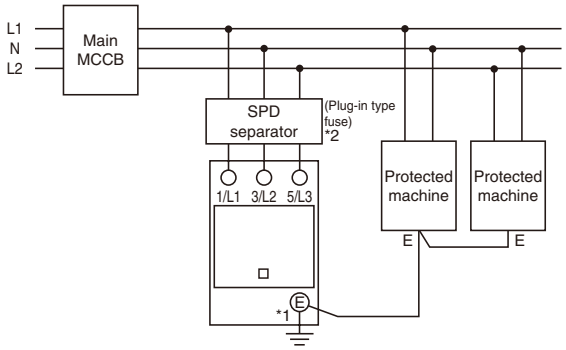

●Three-phase (3-wire 200 VAC, 4-wire 100 VAC / 173 VAC)

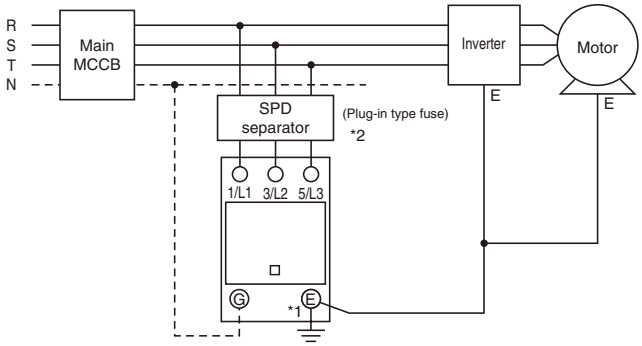

*1 Connect the wiring to the SPD with the shortest distance.
*2 Always use AFaC-40 as an SPD separator.

Surge Protective Device
CN57 series

■ Ratings and specifications

● Integrated type

Type		CN5712	CN5732	CN5712-K	CN5732-K
		No alarm switch	No alarm switch	With alarm switch	With alarm switch
Test class		JIS C 5381-11 Class II / IEC 61643-11 Class II			
Applied circuit		Single-phase two-wire, 100 V Single-phase two-wire, 200 V	Single-phase three-wire, 100 V / 200 V Three-phase three-wire, 200 V Three-phase four-wire, 100 V / 173 V	Single-phase two-wire, 100 V Single-phase two-wire, 200 V	Single-phase three-wire, 100 V / 200 V Three-phase three-wire, 200 V Three-phase four-wire, 100 V / 173 V
Max. continuous operating voltage Uc		280 VAC			
Nominal discharge current In 8/20 μs		10 kA			
Maximum discharge current Imax 8/20 μs		20 kA			
Voltage protection level Up		1.5 kV			
Nominal varistor voltage (V1 mA)	Between L-G	470 V+10% to −15%			
DC discharge start voltage (100 V/s)	Between G-E	600 V to 1100 V			
Total discharge current Itotal	8 / 20 μs	20 kA			
Rated short-circuit current Isccr (When applicable separator connected)		220 VAC 80 kA			
Failure display		Normal: LED lit (green) Power failure/fault: LED unlit			
Operating environmental conditions		Temperature: -40°C to +70°C, Relative Humidity: 95% or less, indoors or inside a waterproof panel			
Mounting method		Direct mounting with rail mounting (35 mm width) or mounting metal bracket, mounting plate for agreement electrical distribution switchboard			
IP degree of protection		IP20			
Vibration resistance		Frequency 10 to 55Hz Amplitude width 0.75 mm (maximum 44m/s^2) 2 hours in each direction (total of 6 hours)			
Shock resistance		196 m/s^2 3 times in each direction (total of 18 times)			
Mass [g] *1		180	210	200	230
Dimensions (L x W x H)		95 x 50 x 60 mm			
Applicable separator		AFaC-40			

*: L indicates 1 / L1 terminal, 3 / L2 terminal, 5 / L3 terminal.
E indicates the earth terminal.
*1: Mounting metal bracket (about 11 g) is not included in mass.

● Alarm switch specification

Circuit specification	Switch specification	1C contact
	Operation method	Linked with built in thermal fuse
	Connection rating	220 VAC 1 A, 110 VDC 0.5 A
	Connection terminal	Screw-less terminal (plug-in terminal)
	Applicable cable	Solid wire Ø 0.5 mm to Ø 1.2 mm Twisted wire 0.3 mm 2 to 1.25 mm2 AWG24 to 16
Circuit protection	MOV equipment between contact terminals	Pick-up voltage (V1 mA) 480 V ± 10% Lightning surge performance 8/20 μs 3.5 kA
	Contact terminal to earth MOV equipment	Pick-up voltage (V1 mA) 480 V ± 10% Lightning surge performance 8/20 μs 3.5 kA

* MOV: Metal oxide varistor

■ Dimensions

Refer to page D1-149.

⚠ Caution on use

● Be sure to earth.
The earth wire of the SPD has the function of quickly diverting any lightning surge inrush to outside the equipment or facility and discharging it to earth. For that reason, it is important to wire the earth wire used for the power supply SPD with a relatively thick (5.5 mm^2) wire to the earth terminal with the shortest distance.
In IEC 62305-4, it is stipulated that in the case of SPD for power supply, a wire of 5.5 mm^2 or more should be used, and that the earth terminal of the board or equipment should be connected with the shortest distance (0.5 m or less is recommended).

● Use a Fuji plug-in type fuse as an SPD separator (for SPD disconnection and short-circuit protection).

● Remove the fuse when conducting withstand voltage tests and insulation resistance tests on equipment and wiring.If you make a mistake, the SPD will be damaged or a measurement value error will occur.

● Please perform earthing work in accordance with the standards of each country.

SPD for low voltage power supply circuit (In 10 kA separator built-in product) CN57-FK series

■ Features

No separately mounted SPD separator is required.
A built-in separator that has passed the 80 kA (220 VAC) circuit breaker test.

- **The SPD separator is built-in**
  A SPD separator with breaking current of 80 kA (220 VAC) is built-in.
  This greatly contributes to space saving in the device.
- **With operating indicator light**
  The green LED is lit when operation is normal.
  When the SPD reaches the end of its life, the LED turns off.
- **3-pole integrated terminal structure**
  Space saving and wiring saving and easy to operate.
- **Conforms to the Public Building Construction Standard Specifications.**
- **GDT mounted between N-E** (GDT: gas-filled discharge tube)
  Conforms to Annex K Figure K.3 of IEC 61643-12
- **IEC 61643-11 compatible product**
- **IEC 35 mm rail mounting, screw mounting, and mounting plate mounting for the agreement electrical distribution switchboard is possible.**

■ Application examples

For protection of equipment connected to switchboards, electrical distribution switchboards, monitoring boards, and control panel internal equipment

1. Protection of electronic equipment such as computers, measuring equipment, and communication equipment
2. Protection of inverters and UPSs
3. Power supply protection for fire alarms, monitoring devices, and broadcast devices, etc.

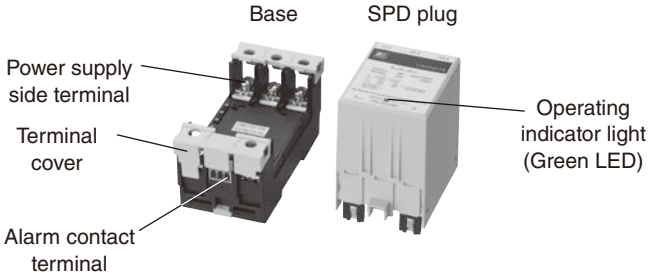

■ SPD model selection table

Nominal discharge current (8/20 μs)			10 kA
100/200 VAC series	For single-phase	Two-wire system	CN5712-FK
		Three-wire system	CN5732-FK
	For three-phase	Three-wire system	

■ Examples of circuits used

●Single phase (100 VAC / 200 VAC)

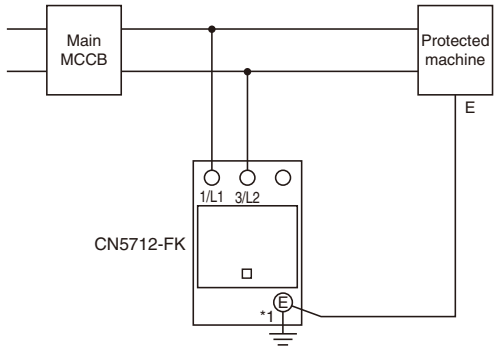

●Single phase 3-wire (100 VAC / 200 VAC)

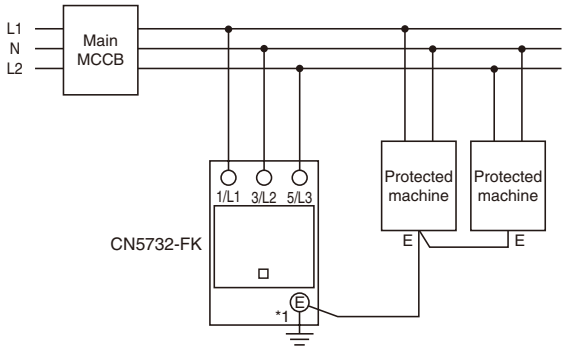

●Three-phase (3-wire 200 VAC, 4-wire 100 VAC / 173 VAC)

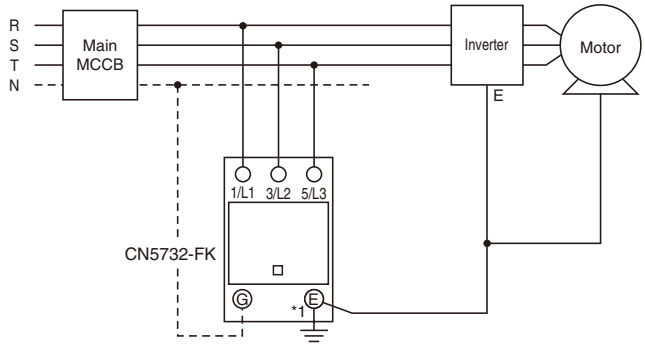

*1 Connect the wiring to the SPD with the shortest distance.

Surge Protective Device
CN57-FK series

■ Ratings and specifications

● Plug-in type

Type		CN5712-FK	CN5732-FK
		With alarm switch	With alarm switch
Test class		JIS C 5381-11 Class II / IEC 61643-11 Class II	
Applied circuit		Single-phase two-wire, 100 V Single-phase two-wire, 200 V	Single-phase three-wire, 100 V / 200 V Three-phase three-wire, 200 V Three-phase four-wire, 100 V / 173 V
Max. continuous operating voltage Uc		280 VAC	
Nominal discharge current In 8/20 µs		10 kA	
Maximum discharge current Imax 8/20 µs		20 kA	
Voltage protection level Up		1.5 kV	
Nominal varistor voltage (V1 mA)	Between L-G	470 V+10% to –15%	
DC discharge start voltage (100 V/s)	Between G-E	600 V to 1100 V	
Total discharge current Itotal	8 / 20 µs	20 kA	
Rated short-circuit current Isccr		SPD standalone 220 VAC 80 kA	
Failure display		Normal: LED lit (green) Power failure/fault: LED unlit	
Operating environmental conditions		Temperature: -40°C to +70°C, Relative Humidity: 95% or less, indoors or inside a waterproof panel	
Mounting method		Direct mounting with rail mounting (35 mm width) or mounting metal bracket, mounting plate for agreement electrical distribution switchboard	
IP degree of protection		IP20	
Vibration resistance		Frequency 10 to 55Hz Amplitude width 0.75 mm (maximum 44m/s²) 2 hours in each direction (total of 6 hours)	
Shock resistance		196 m/s² 3 times in each direction (total of 18 times)	
Mass [g] *1		280	320
Dimensions (L x W x H)		95 x 50 x 92.7mm	
Applicable separator		Built-in so that external mounting is not required	

*: L indicates 1 / L1 terminal, 3 / L2 terminal, 5 / L3 terminal.
E indicates the earth terminal.
*1: Mounting metal bracket (about 11 g) is not included in mass.

● Alarm switch specification

Circuit specification	Switch specification	1C contact
	Operation method	Linked with built in thermal fuse
	Connection rating	220 VAC 1 A, 110 VDC 0.5 A
	Connection terminal	Screw-less terminal (plug-in terminal)
	Applicable cable	Solid wire Ø 0.5 mm to Ø 1.2 mm Twisted wire 0.3 mm 2 to 1.25 mm2 AWG24 to 16
Circuit protection	MOV equipment between contact terminals	Pick-up voltage (V1 mA) 480 V ± 10% Lightning surge performance 8/20 µs 3.5 kA
	Contact terminal to earth MOV equipment	Pick-up voltage (V1 mA) 480 V ± 10% Lightning surge performance 8/20 µs 3.5 kA

* MOV: Metal oxide varistor

■ Dimensions

Refer to page D1-149.

SPD for low voltage power supply circuit (In 20 kA product) CN5B series

■ Features

Conforms to test class I / II
Features lightning surge current withstand capacity four times that of the CN56 series.

- **All models include operating indicator**
  When the SPD reaches the end of its life, the operating indicator turns black.
  (Normal: Green)
- **3-pole integrated terminal structure**
  Space saving and wiring saving and easy to operate.
- **IEC 61643-11 compatible product**
  Under the JIS standard for SPDs established on 2011, a combination test with an SPD separator is required.
  Always combine with a plug-in type fuse.
- **GDT mounted between N-E (GDT: gas-filled discharge tube)**
  Conforms to Annex K Figure K.3 of IEC 61643-12
- **Conforms to the Public Building Construction Standard Specifications.**

■ SPD model selection table

Nominal discharge current In (8/20 μs)			20 kA
100/200 VAC series	For single-phase	Two-wire system	CN5B12
		Three-wire system	CN5B32
	For three-phase	Three-wire system	
400 VAC series	For three-phase	Three-wire system	CN5B34
		Four-wire system	

■ Application examples

For protection of equipment connected to switchboards, electrical distribution switchboards, monitoring boards, and power supply circuits of control panel internal equipment

1. Protection of electronic equipment such as computers, measuring equipment, and communication equipment
2. Protection of inverters and UPSs
3. Power supply protection for fire alarms, monitoring devices, and broadcast devices, etc.

■ Isolating distance

Please ensure an isolating space between the insulation coating of the crimp terminal and the metal housing and between the SPD main unit and the metal housing for CN5B34(-K).

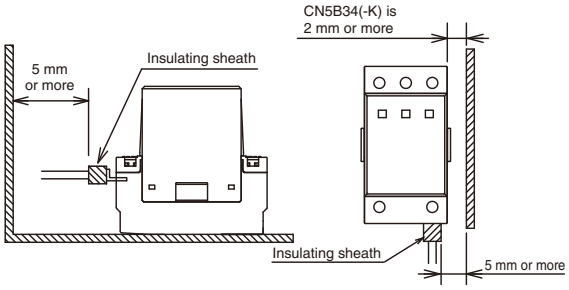

Insulation space

■ Examples of circuits used

●Single phase (100 VAC / 200 VAC)

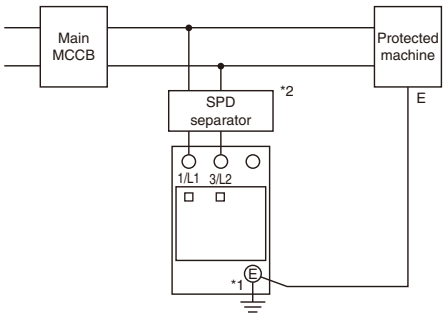

●Single phase 3-wire (100 VAC / 200 VAC)

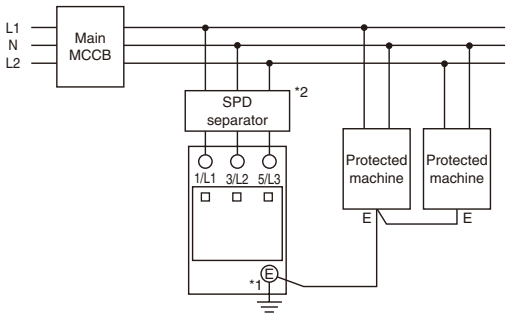

●Three-phase (3-wire 200 VAC / 415 VAC, 4-wire 240 VAC / 415 VAC)

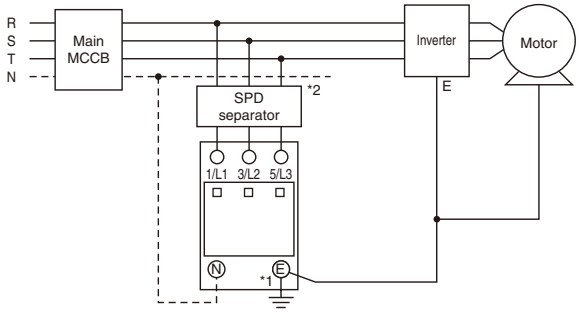

(CN5B32/CN5B32-K: G terminal, CN5B34, CN5B34-K: N terminal)

*1 Connect the wiring to the SPD with the shortest distance.
* 2 Use type AFaC-60 for SPD separator.

Surge Protective Device
CN5B series

■ Ratings and specifications

● Plug-in type

Type		CN5B12	CN5B32	CN5B34	CN5B12-K	CN5B32-K	CN5B34-K
		No alarm switch	No alarm switch	No alarm switch	With alarm switch	With alarm switch	With alarm switch
Test class		JIS C 5381-11 Class I, Class II / IEC 61643-11 Class I, Class II					
Applied circuit		Single-phase two-wire, 100 V Single-phase two-wire, 200 V	Single-phase three-wire, 100 V / 200 V Three-phase three-wire, 200 V Three-phase four-wire, 100 V / 173 V	Three-phase three-wire, 415 V Three-phase four-wire, 240 V / 415 V	Single-phase two-wire, 100 V Single-phase two-wire, 200 V	Single-phase three-wire, 100 V / 200 V Three-phase three-wire, 200 V Three-phase four-wire, 100 V / 173 V	Three-phase three-wire, 415 V Three-phase four-wire, 240 V / 415 V
Max. continuous operating voltage Uc		280 VAC		460 VAC	280 VAC		460 VAC
Nominal discharge current In 8/20 µs		20 kA					
Maximum discharge current Imax 8/20 µs		40 kA					
Impulse discharge current Iimp 10/350 µs		4 kA		2.5 kA	4 kA		2.5 kA
Voltage protection level Up		1.5 kV		2.5 kV	1.5 kV		2.5 kV
Nominal varistor voltage (V1 mA)	Between L-G	470 V ± 10 %		750 V ± 10 %	470 V ± 10 %		750 V ± 10 %
DC discharge start voltage (100 V/s)	Between G-E	600 V to 1100 V					
Total discharge current Itotal	8 / 20 µs	40 kA					
	10/350 µs	12 kA	12.5 kA	12.5 kA	12 kA	12.5 kA	12.5 kA
Rated short-circuit current Isccr (When applicable separator connected)		220 VAC 80 kA		440 VAC 100 kA	220 VAC 80 kA		440 VAC 100 kA
Failure display		Normal: Green Failure: Black					
Operating environmental conditions		Temperature: -40°C to +70°C, Relative Humidity: 95% or less, indoors or inside a waterproof panel					
Mounting method		Direct mounting with rail mounting (35 mm width) or mounting metal bracket					
IP degree of protection		IP20					
Vibration resistance		Frequency 10 to 55Hz Amplitude width 0.75 mm (maximum 44m/s^2) 2 hours in each direction (total of 6 hours)					
Shock resistance		196 m/s^2 3 times in each direction (total of 18 times)					
Mass [g] *1		340	410	400	360	430	420
Dimensions (L x W x H)		95 x 54 x 93.5 mm					
Applicable separator		AFaC-60					

*: L indicates 1 / L1 terminal, 3 / L2 terminal, 5 / L3 terminal.
E indicates the earth terminal.
*1: Mounting metal bracket (about 11 g) is not included in mass.

● Alarm switch specification

Alarm contact	Contact specification	1C contact
	Operation method	Linkage with built-in thermal separator
	Connection rating	220 VAC 1 A, 110 VDC 0.5 A
	Connection terminal	Screw-less terminal (plug-in terminal)
	Applicable cable	Solid wire Ø 0.4 mm to Ø 1.2 mm Twisted wire 0.3 mm 2 to 0.75 mm2
Alarm contact protection	Between alarm contact terminals	Pick-up voltage (V1 mA) 480 V ± 10% Lightning surge performance 8/20 µs 3.5 kA
	Between alarm contact terminals and earth	Pick-up voltage (V1 mA) 1060 V ± 10% Lightning surge performance 8/20 µs 3.5 kA

■ Dimensions

Refer to page D1-150.

⚠ Caution on use

● Be sure to earth.
The earth wire of the SPD has the function of quickly diverting any lightning surge inrush to outside the equipment or facility and discharging it to earth. For that reason, it is important to wire the earth wire used for the power supply SPD with a relatively thick (5.5 mm^2) wire to the earth terminal with the shortest distance.
In IEC 62305-4, it is stipulated that in the case of SPD for power supply, a wire of 5.5 mm^2 or more should be used, and that the earth terminal of the board or equipment should be connected with the shortest distance (0.5 m or less is recommended).

● Be sure to use the Fuji plug-in type fuse AFaC-60 as the SPD separator (for SPD disconnection and short-circuit protection).

● Remove the fuse when conducting withstand voltage tests and insulation resistance tests on equipment and wiring.If you make a mistake, the SPD will be damaged or a measurement value error will occur.

● Please perform earthing work in accordance with the standards of each country.

SPD for DC power supply circuits CN5D series

■ Features

- Rated short-circuit current (Iscpv) of 100 A achieved (excluding Imax 10 kA)
- Circuit breaking up to 2.5 kA is possible by combining with an SPD separator of the type specified.
- When installing SPD in PV (solar power generation) equipment, SPD that can be used with the maximum open circuit voltage is required. Max. continuous operating voltage Ucpv of 1200 VDC achieved.
- Conforms to the Public Building Construction Standard Specifications.
- Conforms with IEC 61643-31

■ Application examples

For protection of PCS for solar power generation systems, junction boxes, and current collector boxes

■ SPD model selection table

Nominal discharge current (8 / 20μs)	5 kA		20 kA	
Rated short-circuit current Iscpv	50 A		100 A	
Additional functions	No alarm switch	With alarm switch	No alarm switch	With alarm switch
600 VDC	CN5D1D-F	CN5D1D-FK	CN5D1C-F	CN5D1C-FK
1000 VDC	CN5D1B-F	CN5D1B-FK	CN5D1A-F	CN5D1A-FK

⚠ Caution on use

● When applying SPD to solar power generation systems, the most important items are the short-circuit current of the circuit and the maximum voltage during operation. Be sure to check these items.

D1

■ Ratings and specifications

Type		CN5D1C-F	CN5D1D-F	CN5D1A-F	CN5D1B-F	CN5D1C-FK	CN5D1D-FK	CN5D1A-FK	CN5D1B-FK
Rated voltage (maximum voltage during operation)		600 VDC		1000 VDC		600 VDC		1000 VDC	
Max. continuous operating voltage Ucpv	+, - ~ E	720 VDC		1200 VDC		720 VDC		1200 VDC	
	+ ~ -	720 VDC		1200 VDC		720 VDC		1200 VDC	
Nominal discharge current In (8/20 μs)		20 kA	5 kA	20 kA	5 kA	20 kA	5 kA	20 kA	5 kA
Maximum discharge current Imax (8/20 μs)		40 kA	10 kA	40 kA	10 kA	40 kA	10 kA	40 kA	10 kA
Total discharge current Itotal (8/20 μs)		40 kA	10 kA	40 kA	10 kA	40 kA	10 kA	40 kA	10 kA
Voltage protection level Up	+, - ~ E	2.5 kV or less		4.0 kV or less		2.5 kV or less		4.0 kV or less	
	+ ~ -	2.5 kV or less		4.0 kV or less		2.5 kV or less		4.0 kV or less	
DC operating voltage [V1mA]	+, - ~ E	940 V ± 10 %		1500 V ± 10 %		940 V ± 10 %		1500 V ± 10 %	
	+ ~ -	940 V ± 10 %		1500 V ± 10 %		940 V ± 10 %		1500 V ± 10 %	
Rated short-circuit current Iscpv		100 A	50 A	100 A	50 A	100 A	50 A	100 A	50 A
When the circuit current is larger than Iscpv		Circuit breaking at DC 1 kV, 2.5 kA has been confirmed when using our specified separator Under no circumstances use items other than the specified separator.							
Test class		Class I / II	Class II	Class I / II	Class II	Class I / II	Class II	Class I / II	Class II
Applied circuit	DC side insulation	○				○			
	DC side 1-wire earthing	○				○			
Safety at time of failure	1 line earthing *	○ (*In the case of DC side insulation)				○ (*In the case of DC side insulation)			
	SPD gradually deteriorates	○				○			
	SPD short-circuit failure	○				○			
Alarm contact	Contact specification	-				1C contact			
	Contact rating	-				220 VAC 1 A,110 VDC 0.5 A			
	Connection terminal	-				Screw-less terminal (plug-in terminal)			
	Applicable cable	-				Solid wire Ø 0.4 mm to Ø 1.2 mm Twisted wire 0.3 mm² to 0.75 mm²			
Operating indicator (failure indication)		Normal: Green Failure: Black				Normal: Green Failure: Black			
Environmental factor	Operating temperature and storage temperature	−40°C to +70°C				−40°C to +70°C			
	Relative humidity	95% or less, no dew condensation or freezing				95% or less, no dew condensation or freezing			
	IP degree of protection	IP20				IP20			
	Vibration resistance performance	Frequency 10 to 55 Hz Amplitude width 0.75 mm (maximum 44 m/s²) 2 hours in each direction (total of 6 hours)							
	Shock resistance	196 m/s² 2 times in each direction (total of 6 times)				196 m/s² 2 times in each direction (total of 6 times)			
Connection terminal / connection wire		Screw terminal connection method: M5 (with live-section protective cover)				Screw terminal connection method: M5 (with live-section protective cover)			
		Connectable wire 3.5 to 14 mm², Maximum round crimp terminal width 12.4 (nominal size JIS C 2805 R14-5), tightening torque 2.0 to 2.5 Nm							
Mounting method		Direct mounting with rail mounting (35 mm width) or mounting metal bracket (can also be mounted to a combined mounting plate for agreement electrical distribution switchboard)							

Surge Protective Device
CN5D series

■ Examples of circuits used

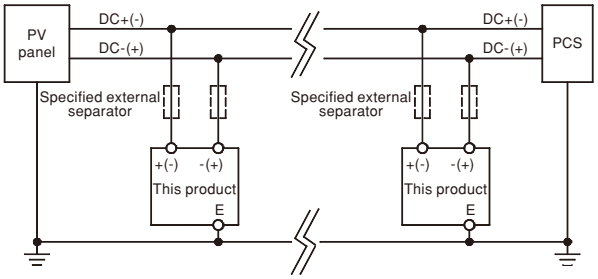

* This product does not require an additional separator on the upstream of SPD when the short circuit current at SPD failure is Iscpv or less. However, when the short circuit current of the circuit exceeds Iscpv, make sure to connect the specified external separator on the upstream of SPD.
(Contact us regarding the details of the external separator.)

■ Dimensions, mm

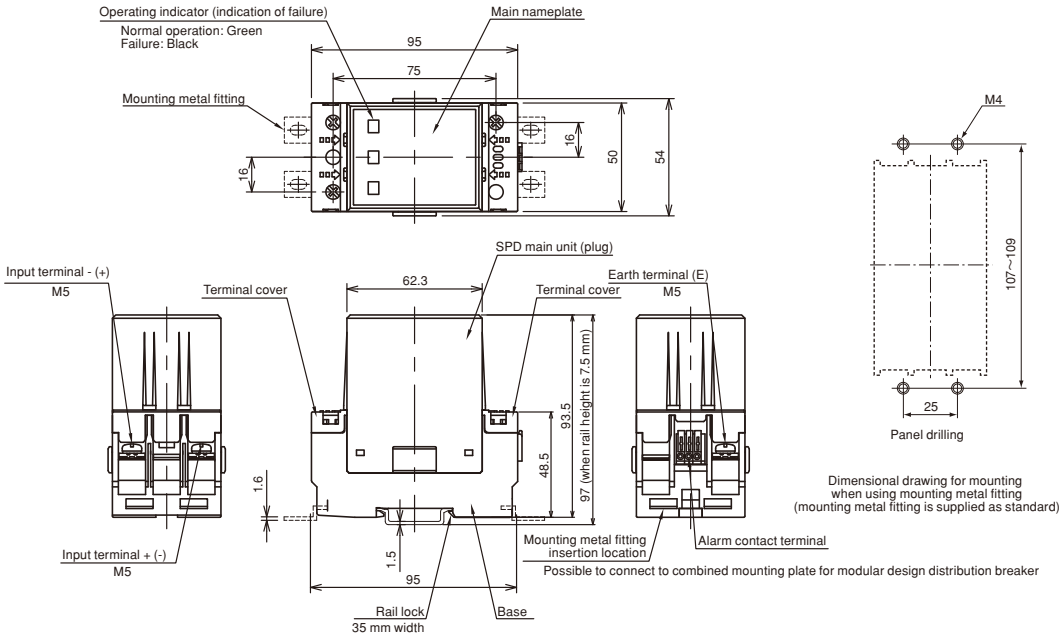

●When installing SPD for DC power supply circuits in PV systems, be sure to check the following items.

- Selection of voltage protection level Up of SPD
  The Up value must be less than 80% of the protected equipment impulse withstand voltage value.
- Selection of max. continuous operating voltage Ucpv for SPD
  The Ucpv value must be greater than or equal to the maximum no-load voltage UocMax of the PV generator.
- Selection of rated short-circuit current Iscpv for SPD
  The Iscpv value must be greater than or equal to the maximum current IscMax that can flow in the PV generator.

There is a limit to the Iscpv value for SPD alone. If the IscMax value exceeds the Iscpv value, an external separator is mandatory.
Particularly in DC circuits, because much more difficult circuit breaking capability is required than in AC circuits, it is necessary to select an SPD that has been tested in combination with an appropriate external separator to avoid serious accidents with the PV system caused by lightning surge inrush.

Caution on use

● Be sure to earth.
The earth wire of the SPD has the function of quickly diverting any lightning surge inrush to outside the equipment or facility and discharging it to earth. For that reason, it is important to wire the earth wire used for the power supply SPD with a relatively thick (5.5 mm^2) wire to the earth terminal with the shortest distance.
In IEC 62305-4, it is stipulated that in the case of SPD for power supply, a wire of 5.5 mm^2 or more should be used, and that the earth terminal of the board or equipment should be connected with the shortest distance (0.5 m or less is recommended).

● Remove the fuse when conducting withstand voltage tests and insulation resistance tests on equipment and wiring. If you make a mistake, the SPD will be damaged or a measurement value error will occur.

● Please perform earthing work in accordance with the standards of each country.

■ Dimensions, mm

● CN5612 ● CN5632 ● CN5634
● CN5712 ● CN5732

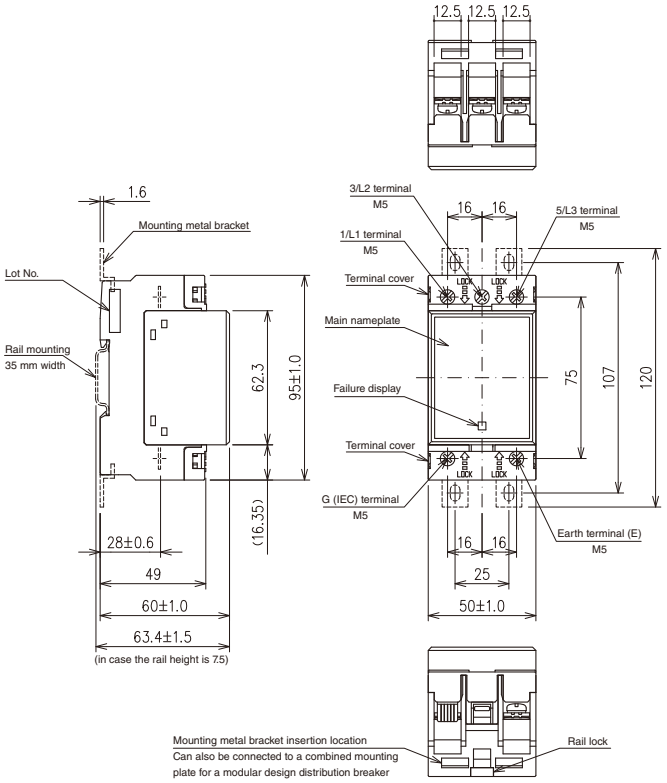

● CN5612-K ● CN5632-K ● CN5634-K
● CN5712-K ● CN5732-K

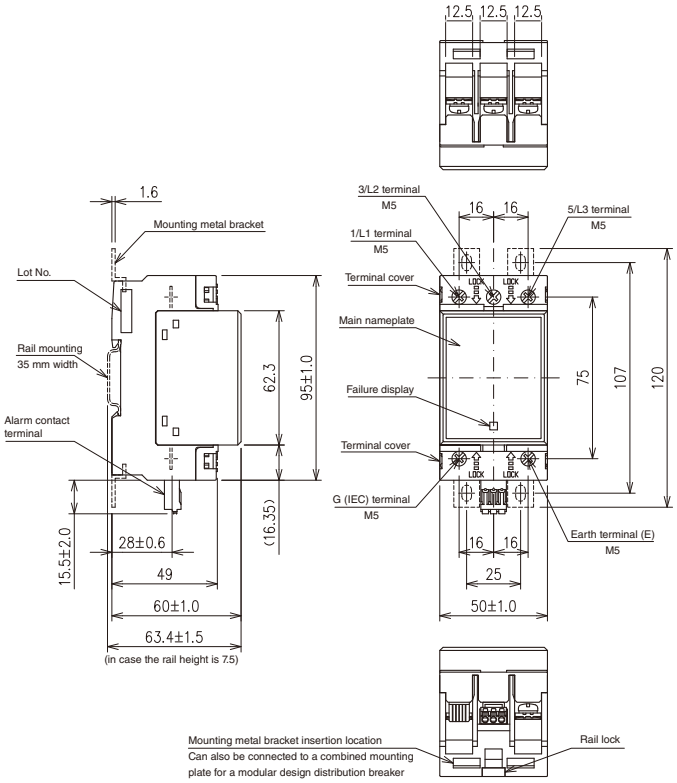

● CN5712-FK ● CN5732-FK

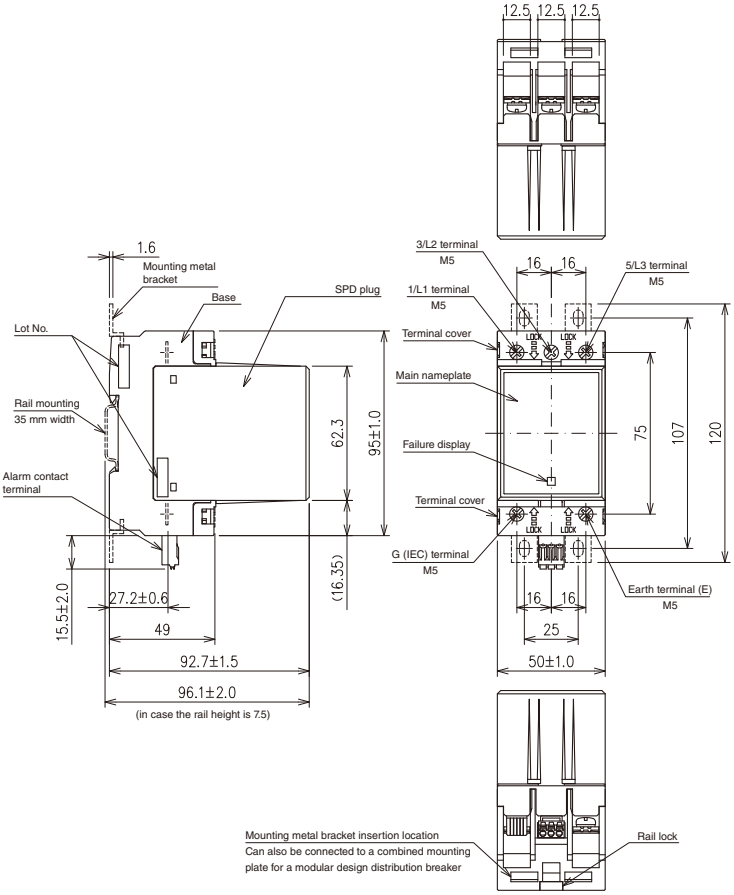

Surge Protective Device
CN5 series

● CN5B12 ● CN5B32 ● CN5B34

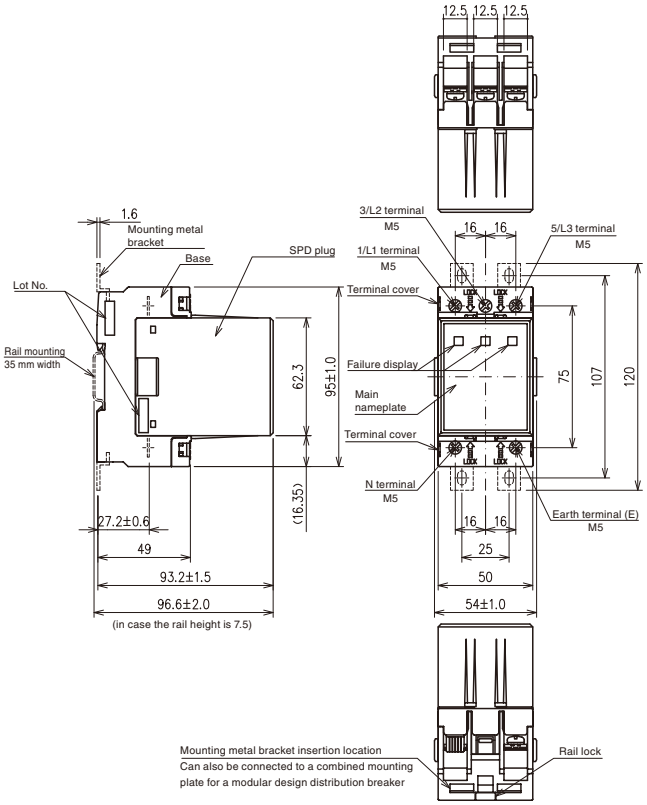

● CN5B12-K ● CN5B32-K ● CN5B34-K

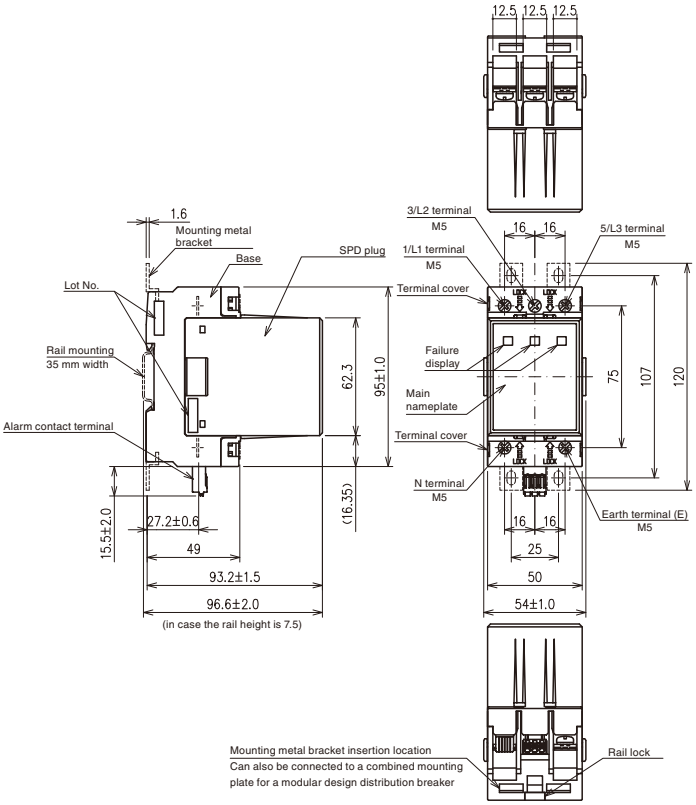

● CN5D1D-F ● CN5D1B-F ● CN5D1C-F ● CN5D1A-F
● CN5D1D-FK ● CN5D1B-FK ● CN5D1C-FK ● CN5D1A-FK

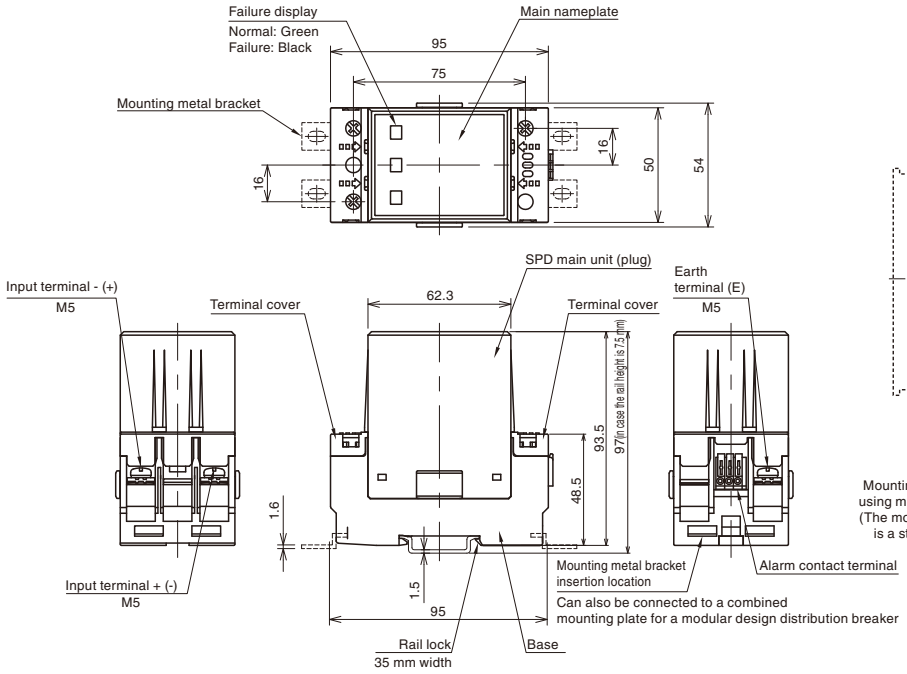

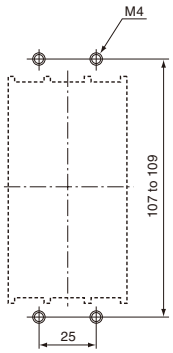

Panel drilling

Mounting dimensions when using mounting metal bracket (The mounting metal bracket is a standard accessory)

CN226 series surge protective devices for signal line and control circuit

■ Features

- Protection characteristics satisfy categories C2 and D1 of the IEC 61643-21 standard.
- Simple mounting to IEC rail.
- The arrester mounts to the terminal block using a plug-in connection for simple inspection and replacement. Signal lines are not opened even if the arrester is removed.

CN226-A20 CN226-PT

■ Specifications

• For signal line circuit

Type		CN226-A20	CN226-A50	CN226-TC	CN226-PT	CN226-PM	CN226-SP	CN226-24	CN226-48	CN226-100	CN226-T65	CN226-T24
Application		4-20 mA	10-50 mA	Thermocouple	Resistance thermometer	Potentiometr	Slow pulse	24V DC	48V DC	100V DC	65V DC	24V DC
Rated voltage		24V DC	48V DC	5V DC	8V DC	5V DC	12V DC	24V DC	48V DC	100V DC	65V DC	24V DC
Rated current		100mA						200 mA			100mA	
Leakage current		5 μA max.		10 μA max.	2 μA max.	10 μA max.		5 μA max.				
Operation start voltage (V1mA)	Between wires	30V min.	61V min.	6.7V min.	11V min.	6.7V min.	14V min.	30V min.	60V min.	150V min.	85V min.	30V min.
	Voltage to ground	150V min.								180V min.	300V min.	
Clamping voltage (Vp)	Between wires	40V max.	100V max.	14V max.	22V max.	14V max.	25V max.	55V max.	130V max.	700V max.	150V max.	60V max.
	Voltage to ground	300V max.								800V max.	1000V max.	
Internal resistance		10 Ω ±10% (Single)			2Ω±10% (Single)	10 Ω ±10% (Single)		1 Ω ±10% (Single)			20Ω±10% (Two round trip lines)	
No. of ports		2-port, combination type										
Response time		0.1 μs max.										
Max.discharge current (8/20μs)	Between wires	5,000 A										
	Voltage to ground	10,000 A									5,000 A	

■ Type number nomenclature

CN226 - □

Application circuit

A20:	4 to 20mA	24:	Signal circuit 24V DC
A50:	10 to 50mA	48:	Signal circuit 48V DC
TC:	Thermocouple	100:	Signal circuit 100V DC
PT:	Resistance thermometer	T65:	Compliant with signal circuit shield (65 V DC)
PM:	Potentiometer	T24:	Compliant with signal circuit shield (24 V DC)
SP:	Slow pulse		

Basic type

■ UL-approved type (Applicable standard: UL 497B File No. E245712)

Category	Signal circuit							
Type number (i.e., product code)	CN226-A20	CN226-A50	CN226-TC	CN226-PT	CN226-PM	CN226-SP	CN226-24	CN226-48
Application	4-20 mA	10-50 mA	Thermocouple	Resistance thermometer	Potentiometer	Slow pulse	24V DC	48V DC

* Refer to the table above or rated specifications, prices, and shipment.

■ Ambient conditions

- Ambient operating temperature: –20 to 50˚C (No condensation)
- Relative operating humidity: 45% to 85% (No condensation)
- For indoor use

■ Ordering information

Specify the following:

1. Type number or ordering code

Surge Protective Device
CN226 series

■ Internal wiring

4 to 20mA, 10 to 50mA *1
Type: A20, A50

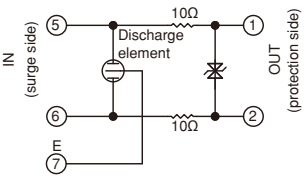

*1: Connection can be made regardless of polarity.

Resistance thermometer *1
Type: PT

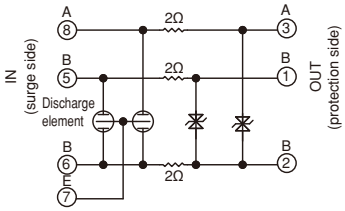

24V, 48V, 100V DC for signal *1
Type: 24, 48, 100

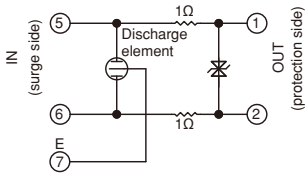

Thermocouple *2
Type: TC

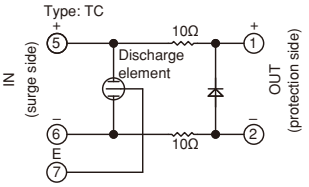

*2: Be careful of polarity when making the connection.

Potentiometer and slow pulse *2
Type: PM, SP

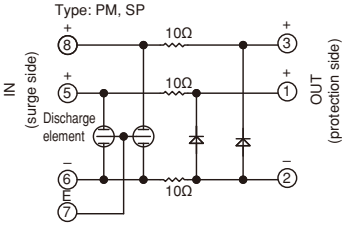

65V, 24V DC for signal (for shield earth) *1
Type: T65, T24

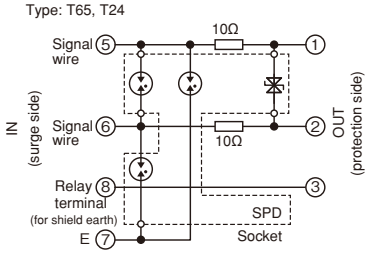

■ Application circuit example

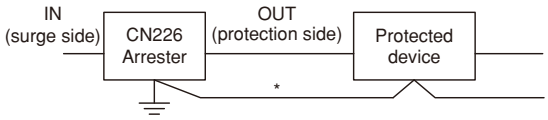

* Make the connection at the shortest distance.

Note for CN226-TC thermocouple

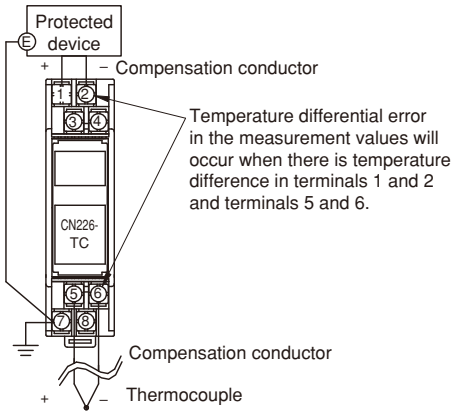

■ Dimensions,mm

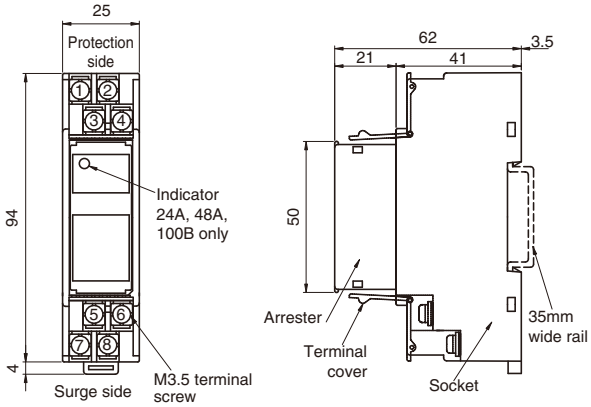

Operating precautions

- Install the arrester as close as possible to the protected device.
- Be sure to securely connect the grounding terminal (E terminal) to the grounding the terminal of the panel. Consecutively ground the protected device and the arrester at the shortest distance using a grounding wire of 2mm^2 min. with grounding on the arrester side.
- Use an arrester that is appropriate for the operating voltage and application. Incorrect application may result in failure or loss of protection.
- Remove the arrester from the socket before performing a withstand test or insulation resistance test on the device. Incorrect testing may damage the arrester or result in measurement value errors.
- Use a DC power supply with the following specifications to connect to the signal arrester.
  Using a large-capacity power supply may result in damage or fire due to inability to interrupt the short-circuit current that flows when the arrester operates.
  Applicable types: CN226-24, CN226-48, CN226-100
  DC power supply: CN226-24: 24V DC, 40W max, 1.7A max.,
  CN226-48: 48V DC, 30W max., 0.6A max.,
  CN226-100: 100V DC, 40W max., 0.4A max.

Surge protective divices for control power circuits, CN226-24A, 48A, 100B

■ Features

The measuring instruments and controllers are protected from lightning surges through signal & control circuits.

- The protection method in combination of gas discharge tube, Zener diode, and varistor provides excellent surge absorption effect.
- The control power circuits (24, 48, and 110V AC/V DC) are provided.
- It's easy to mount the product (on a rail) and a terminal cover comes with the product.
- Since main SPD unit and terminal block are plug-in type, it's easy to check and replace them. Even if main SPD unit is removed, the signal circuit will not be opened.
- Compliant with IEC 61643-1, class II
- When the SPD comes to the end of its life, the red LED goes out.

CN226-24A

■ Type number nomenclature

CN226 - 24A

Basic type — Arrester for control power

Application circuit
- 24A: Control power circuit (24V AC/DC)
- 48A: Control power circuit (48V AC/DC)
- 100B: Control power circuit (110V AC/DC)

■ Specifications

- For control power circuit

Type		CN226-24A	CN226-48A	CN226-100B
Application		24V AC/DC	48V AC/DC	110V AC/DC
Rated voltage		24V AC/DC	48V AC/DC	110V AC/DC
Rated current		2A		
Leakage current		10mA or less		
Starting voltage [V_{1mA}]	Between wires	40V or more	84V or more	180V or more
	To ground	350V or more		350V or more
Voltage protection level [U_p]	Between wires	250V or less	400V or less	1,000V or less
	To ground	900V or less		1,000V or less
Discharge withstand current rating (8/20μs)	Between wires	2kA		5kA
	To ground	2kA		5kA

■ Application circuit example

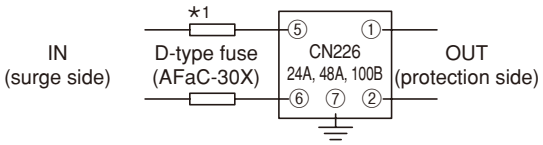

*1: When using CN226-100B, make sure to use a d-type fuse for disconnecting SPD and protecting the device against short-circuit.

■ Dimensions,mm

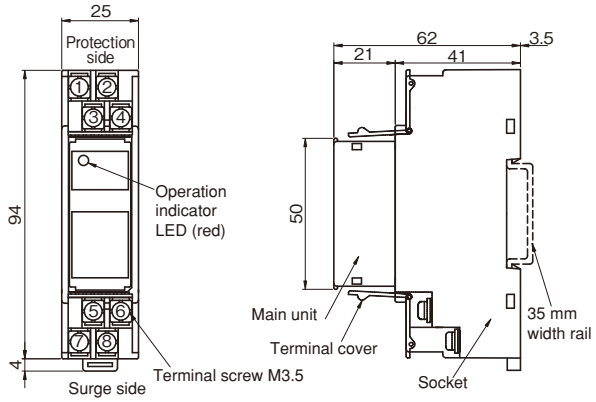

Operating precautions

- Mount the SPD as near the protected device as possible.
- Make sure to connect the earth terminal (E terminal) to the earth terminal on the board. The earth wire should be 2mm^2 or more. Ground the protected device juncturally with SPD as shortly as possible at the SPD side.
- Select SPD according to the operational voltage or use. Its misuse may cause a failure and proper protection may not be taken.
- When performing the withstand voltage test or insulation resistance test of the equipment, remove the main SPD unit from the socket. If the main SPD unit is not removed from the socket by mistake, the SPD may be broken or a measured value error may occur.

Surge Protective Device
CN227-CAT5E

Surge protective divices for LAN, CN227-CAT5E

■ Features

Compliant with IEEE802.3 af/at
The equipment is protected from lightning surges through signal circuits.

- Protective characteristics satisfying IEC 61643-21, categories C2, D1
- Bigger impulse withstand capability
- Capable to support all PoE

■ Application example

- The communication equipment is protected from lightning surges intruding into LAN cables for high-speed communication (1000Base-T 1000 Mbps).

CN227-CAT5E

■ Specifications

Type		CN227-CAT5E
Application *1		RJ-45 connector connection Lightning surge protection of Ethernet circuit
Max. continuous operating voltage Uc		60V DC
Rated current I_N		500mA
Transmission frequency bandwidth		DC - 100MHz
Insertion loss *2		DC - 100 MHz, 1 dB or less
Near-end crosstalk (NEXT) *2		DC - 100 MHz, 32.3 dB or more
Return loss *2		DC - 100 MHz, 12.1 dB or more
Voltage protection level (impulse limit voltage) Up	To ground	600V or less
Impulse withstand capability *3 (Test class, JIS C 5381-21)	Category C2 (8/20μs)	5kA
	Category D1 (10/350μs)	1kA
Operating environment		Temperature: -20 to 60°C, relative humidity: 95% RH or less. No icing or no condensation
Dimensions (L x W x H)		(Thickness: oval) 35 x 40 x (length) 81mm
Mass		50 g

*1: IEEE802.3i, IEEE802.3u, IEEE802.3ab, IEEE802.3af, IEEE802.3at
*2: CAT5e standard
*3: Indicates the total sum voltage to ground of all wires. The category C2 represents the current value where positive and negative 8/20 μs current waveform is applicable five times. The category D1 represents the current value where positive and negative 10/350 μs current waveform is applicable once.

■ Application circuit example

- CN227-CAT5E

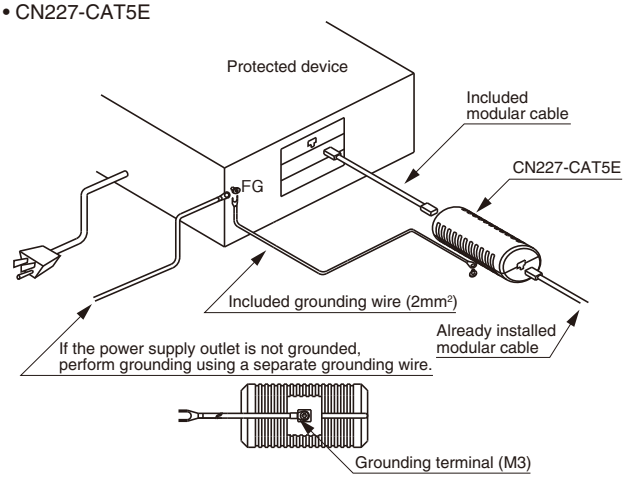

■ Dimensions,mm

- CN227-CAT5E

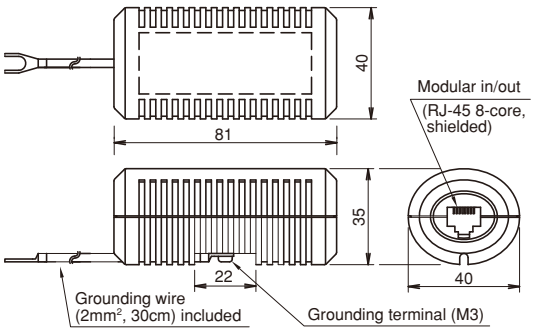

The SPD protects network circuits from lighting surges, CN227 series

CN227-UCP

■ **Application**

- Communications equipment is protected from lightning surges that may enter telephone lines or other communications lines.

■ **Features**

- Support for UCS (universal connection system).
- Modular plug-in for high-density wiring system.
- Equipped with failure display. (Normal: white, failure: red)

CN227-NT

■ **Application**

- Equipment is protected from lightning surges that may enter coaxial cables of ITV and monitor cameras or data transmission devices.

■ **Features**

- Ideal protection for ITV coaxial lines with weak withstand voltage.
- Transmission noise is absorbed with improved production characteristics by combining gas discharge tubes at noise filters.
- Protection characteristics satisfy categories C2 and D1 of the IEC 61643-21 standard.
- IEC rail mounting.
- Ideal for transmission lines on which a DC power supply(30V DC, 250mA max.) is superimposed on the coaxial.

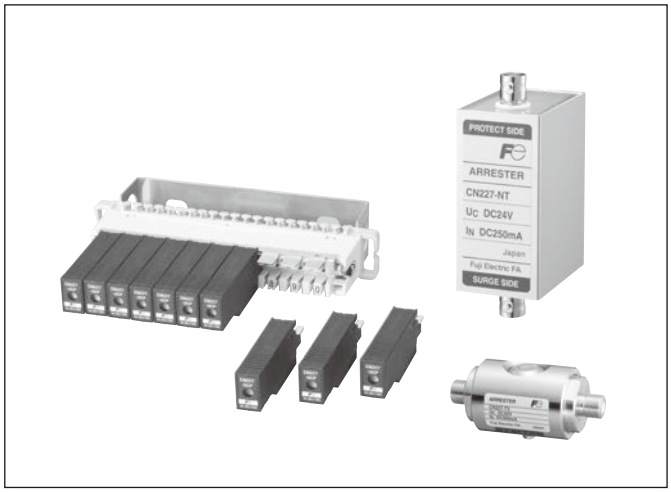

CN227-TV

■ **Application**

- Devices are protected from lightning surges that may enter coaxial cables for a satellite digital TV.

■ **Features**

- Composed with coaxial connectors and high-performance gas discharge tubes.
- Compact size with high impulse resistance.
- Excellent transmission performance (large frequency bandwidth and little insertion loss).

D1

■ **Specifications**

Type		CN227-UCP	CN227-NT	CN227-TV
Application		General telephone lines (modular)	ITV and monitor cameras	Satellite digital TV
		2-wire		
Max. continuous operating voltage (Uc)		170V DC	30V DC	60V DC
Rated current		130mA	250mA	500mA
Transmission frequency bandwidth		DC 0 to 10MHz	DC 0 to 10MHz	DC 0 to 2.2GHz
Insertion loss		1dB max.	1.5dB max.	0.5dB max.
Transmission speed/DC resistance		DC resistance: 13Ω max. (1 wire)	DC resistance: 4Ω max.	–
DC operating voltage (V1mA)/DC discharge start voltage (100V/s)	Between wires	–	–	–
	Voltage to ground	175 to 275V DC (100V/s)	90V DC±20% (100V/s)	90V DC±20% (100V/s)
Voltage protection level (impulse limit voltage) (Up)	Between wires *1	300V max.	250V max.	–
	Voltage to ground	300V max.	250V max.	600V max. (between central conductor and external conductor)
Impulse withstand *2	Category C2 (8/20μs)	10kA	10kA	10kA
	Category D1 (8/350μs)	2.5kA	2.5kA	2.5kA
Environment		Temperature: –20 to 60°C, Humidity: 95% max. RH (no icing or condensation)		
Interface and applicable connection wire		Plug-in solid wire: 0.4 to 0.8 dia.	BNC jack - BNC jack	F jack - F jack
Mechanical durability	Vibration resistance (durability)	–	Frequency: 10 to 55Hz, Double amplitude: 0.75mm (4.5G max.), 2 hours in each direction for a total of 6 hours	
Dimensions (L x W x H)		19 x 9.5 x 59.5mm	60 x 32 x 91mm	(Thickness) 28 x 30 x (length) 60mm

Note *1: This gives the value when lightning surge voltage is applied between wires with one wire grounded.
*2: This gives the total value for voltage to ground for each wire. Category C2 indicates the current value with power applied 5 times each for positive and negative polarities at a current waveform of 8/20μs, and category D1 indicates the current value with power applied one time each for positive and negative polarities at a current waveform of 8/350μs.

Surge Protective Device
CN227 series

■ Internal wiring

CN227-UCP

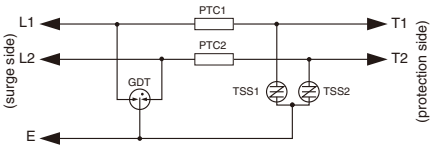

CN227-NT

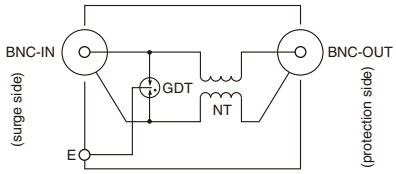

CN227-TV

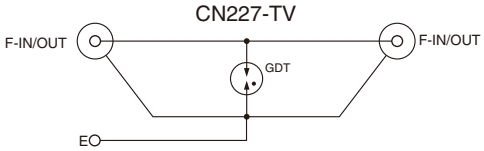

■ Dimensions,mm

CN227-UCP

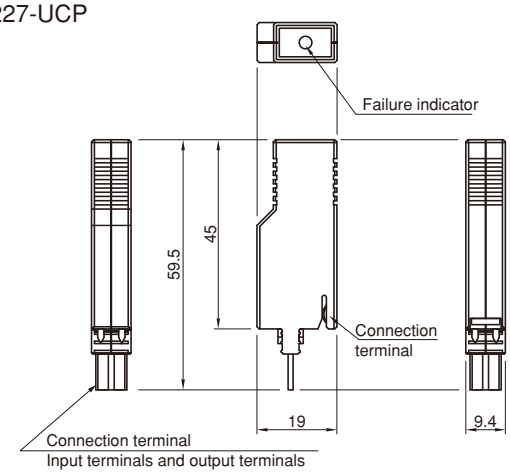

CN227-NT

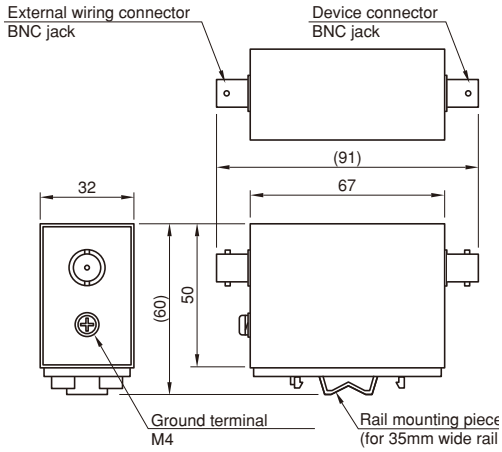

CN227-TV

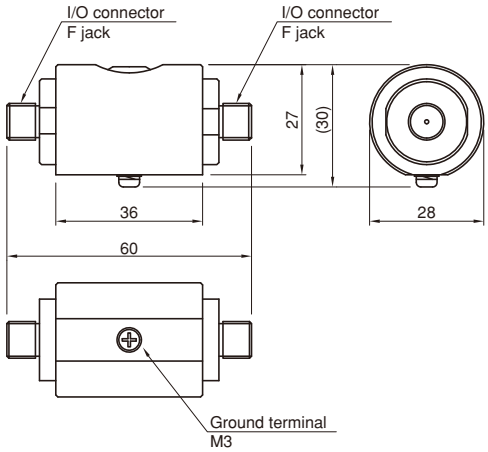

Surge Protective Device
CN2340, CN2341

■ Features

Single-pole SPD with gas discharge tube.
Is important to use the same equipotential bonding and ground when building systems to protect against lightning.
Sometimes, however, various types of grounds are independently installed inside equipment, and grounding circuit arresters enable potential equalization between grounding polls.

- CN2340: Used when the same ground cannot be used between power circuits.
  (For example, performing grounding with provisions based on electrical equipment technology standards, such as independent B-type grounding.)
- CN2341: Used when the same ground cannot be used for power circuits and control circuits.
  (For example, performing independent grounding of devices to prevent noise from entering, such as with inverter grounding.)
- With a rail mounting construction that is 18mm wide, the design is ideal for applications.

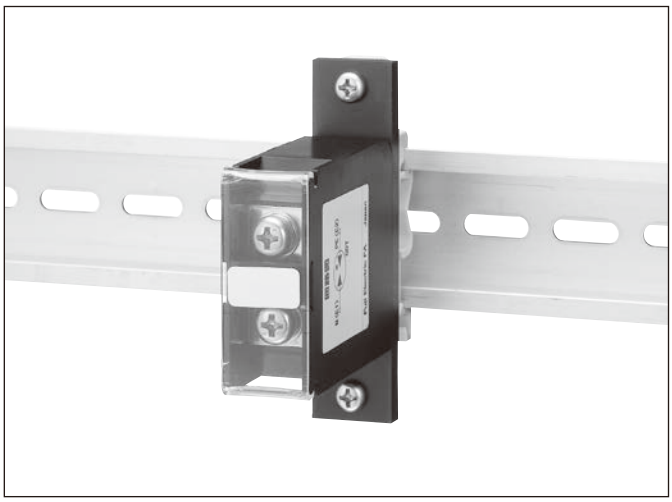

■ Ratings, specifications, types

Type	**CN2340**	**CN2341**
Application	Between ground and grounded circuits Grounding between power circuits	Between ground and grounded circuits Grounding between power circuits and control circuits
Test class (IEC 61643-11)	Class I/II	Class I/II
Voltage protection level (Up) (limit voltage)	1,500V max.	800V max.
Operation start voltage	490V DC±70V	90V DC±18V
Impulse current (I imp)	10/350μs 5kA	10/350μs 2.5kA
Nominal discharge current (In)	8/20μs 20kA	8/20μs 20kA
Max. discharge current (I max)	8/20μs 30kA	8/20μs 25kA
Connection terminals/connection wires	Screw terminal connection: M5 (for bare round crimp terminals)	
	Recommended connection wire (stranded wire: 3.5 to 14mm^2) Round crimp terminal size: 3.5mm^2: R3.5 to 5 8mm^2: R8 to 5 5.5mm^2: R5.5 to 5 14mm^2: R14 to 5	
Operating environment	Temperature: –20 to 60°C, Humidity: 95% max. (no condensation)	

■ Internal wiring

GDT: Gas discharge tube

■ Application circuit example

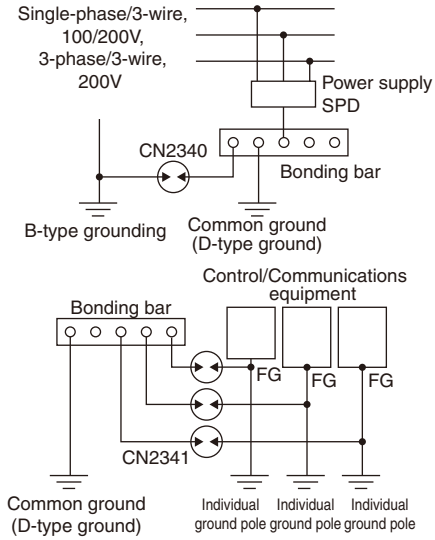

■ Dimensions,mm

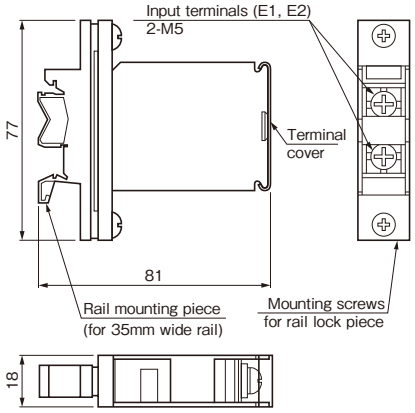

Instrument Transformers
General information

■ Description

The FUJI low-voltage instrument transformers are available as current transformers and potential transformers. These transformers have a *maximum voltage of 1150V and are suitable for circuits up to 600V. Windings have excellent mechanical, thermal and electrical performance since CT's are molded in polyester resin and VT's in epoxy resin. They are also moisture proof and have good insulation properties. The laminated iron core is made of oriented silicon steel strip. Both VT's and CT's have a class 1.0 accuracy rating, and conform to the requirements of JIS C 1731, JEC 1201 and other standards.
Current transformers are available in either through-type or primary-winding versions.

*Maximum voltage: $\frac{\text{Nominal voltage}}{1.1} \times 1.15$

■ Low voltage current transformers

CC3L

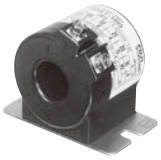

AF00-103

The CC3L type is a round hole through-type current transformer. The ratio can be changed according to the number of turns of the primary windings. It has excellent insulation characteristics and is both compact and light in weight.

CC3M

AF00-107

The CC3M type is a current transformer which has a flat terminal primary winding. It is used in the bus section of the load center or the control center. It can be mounted either horizontally or vertically.

CC3P

AF00-102

The CC3P type is a current transformer which has a primary winding thus facilitating connection work.
The installation angle can be varied from the standard position through 90°. They can be supplied with the primary current rating from 5 to 50 Amps.

CC2

AF99-266

The CC2D and 2C current transformers are split-types. The CTs can be mounted to existing panels, such as control centers or load centers, to measure or monitor the wattage. These can be mounted without removing existing cables for easier installation. Rated primary currents are available from 5 to 1200A.

■ Low voltage potential transformers

CD 32, 34

AF00-215

The CD32 and CD34 transformers are low-voltage types. Types with a fuse of a 100kA interrupting capacity have been added to the series. This series is available for burdens of 15 and 50VA.

■ Varieties of instrument transformers

Application	Circuit voltage	Type	Rated load	Rated primary current (A) / Rated voltage	Accuracy class [class]	Conformed standard
For general instruments For cabling	1100V or less	**CC3L1**	5VA	60 to 750A/5A 60 to 750A/1A	1.0	JIS C 1731-1
		CC3L2	15VA	100 to 750A/5A 100 to 750A/1A		
		CC3L3	40VA	150 to 750A/5A 150 to 400A/1A		
For general instruments For small current	1100V or less	**CC3P1**	5VA	1 to 50A/5A 1 to 50A/1A	1.0	JIS C 1731-1
		CC3P2	15VA	1 to 50A/5A 1 to 50A/1A		
		CC3P3	40VA	1 to 50A/5A 1 to 50A/1A		
For general instruments For bus bar wiring	1100V or less	**CC3M1**	5VA	150 to 600A/5A	1.0	JIS C 1731-1
		CC3M2	15VA	150 to 2000A/5A 150 to 2000A/1A		
		CC3M3	40VA	200 to 6000A/5A 200 to 2000A/1A		
For general instruments For cabling	440V or less	**CC2C76**	0.5VA	800,1200A/1A	–	–
		CC2D74		100 to 400A/1A	–	–
		CC2E74		100 to 600A/1A	–	–
For F-MPC series	440V or less	**CC2D81**	0.2693mVA 26.93mVA	5A/7.34mA 50A/73.4mA	–	–
		CC2D71	11.1mVA	100A/33.33mA		
		CC2D65	44.4mVA	200A/66.7mA		
		CC2D54	0.18VA	400A/133.3mA		
		CC2D52	0.178VA	800A/133.3mA		
		CC2B65	44.4mVA	200A/66.67mA	–	–
		CC2B54	177.8mVA	400A/133.33mA		
For general instruments For relay	440V or less	**CD32F** (With fuse)	15VA	220/110V 440/110V	1.0 / 1P	JIS C 1731-2 JEC-1201
		CD32N (Without fuse)	15VA			
		CD34F (With fuse)	50VA	220/110V 440/110V	3.0 / 3P	
		CD34N (Without fuse)	50VA			
		CD36F (With fuse)	100VA	220/110V 440/110V	1.0 / 1P	
		CD36N (Without fuse)	100VA			

Fuji Electric FA Components & Systems Co., Ltd.
Information subject to change without notice

Instrument Transformers
Through-type CT/CC3L

■ Features

- Employment of double mold structure. The transformer is small and lightweight, and excellent in humidity resistance and environmental resistance.
- Arbitrary change in current transformation ratio by the primary conductor through number makes the product flexible and economical.
- Smooth surface of the case makes the penetration work through the primary conductor easy.
- Lined up rated products of 5 VA, 15 VA, and 40 VA.
- Vinyl electric wire of 600 V is available for the primary conductor.
- The direction of setting foot can be changed by 90°.

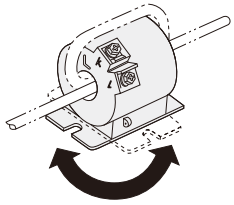

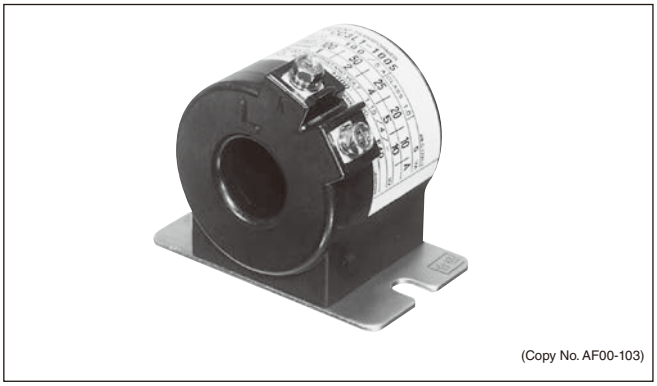

(Copy No. AF00-103)

■ Applications

For general instruments

■ Conforming standards

JIS C1731-1

■ Description of type (= product code)

CC3L □ - □ □

Basic type (series name)

Rated load
1: 5VA
2: 15VA
3: 40VA

Secondary current
1: 1A
5: 5A

Primary current converted into through number 1 turn. (Refer to page D1-161.)
060: 60A
100: 100A
300: 300A

■ When placing an order;

Specify the following items:
(Example)
- Type: CC3L1-2005
- Quantity: 1 unit

■ Ratings and specifications

Type	Rated primary current (A) Secondary current 5A	Rated primary current (A) Secondary current 1A	Rated load [VA]	Accuracy class [class]	Rated overcurrent strength [times]	Highest voltage / withstand voltage [kV]	Rated frequency [Hz]	Outline drawing	Mass [kg]
CC3L1	60	60	5	1.0	40	1.15/4/-	50/60	Fig. 5	1.9
	75	75							
	100	100	5	1.0	40	1.15/4/-	50/60	Fig. 1	0.6
	120	120							
	150	150							
	160	160							0.6
	180	180							
	200	200							0.6
	240	240	5	1.0	40	1.15/4/-	50/60	Fig. 2	0.5
	250	250							
	300	300							
	400	400							0.5
	500	500	5	1.0	40	1.15/4/-	50/60	Fig. 3	0.5
	600	600							0.5
	750	750							0.6
CC3L2	100	100	15	1.0	40	1.15/4/-	50/60	Fig. 5	2.0
	120	120							
	150	150	15	1.0	40	1.15/4/-	50/60	Fig. 4	1.0
	160	160							
	180	180							
	200	200							
	240	240	15	1.0	40	1.15/4/-	50/60	Fig. 2	0.6
	250	250							
	300	300							
	400	400							
	500	500	15	1.0	40	1.15/4/-	50/60	Fig. 3	0.8
	600	600							
	750	750							0.6
CC3L3	150	150	40	1.0	40	1.15/4/-	50/60	Fig. 5	2.0
	160	160							
	180	180							
	200	200							
	240	240	40	1.0	40	1.15/4/-	50/60	Fig. 6	1.2
	250	250							
	300	300							
	400	400							
	500	–	40	1.0	40	1.15/4/-	50/60	Fig. 3	0.8
	600	–							
	750	–							

(Note) - The withstand voltage indicates the commercial frequency withstand voltage value/lightning impulse withstand voltage value.

Instrument Transformers
Through-type CT/CC3L

■ External dimensions [unit: mm]

Fig. 1 **CC3L1:** 100, 120, 150, 160, 180, 200A

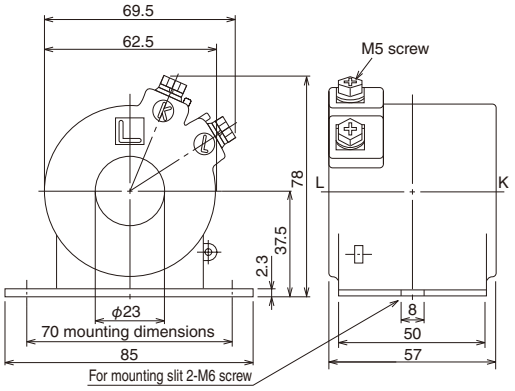

Fig. 2 **CC3L1:** 240, 250, 300, 400A
CC3L2: 240, 250, 300, 400A

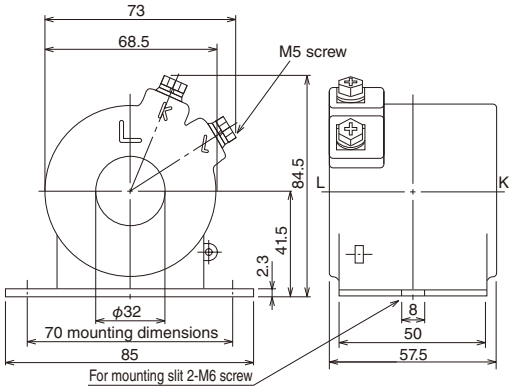

Fig. 3 **CC3L1, L2, L3:** 500, 600, 750A

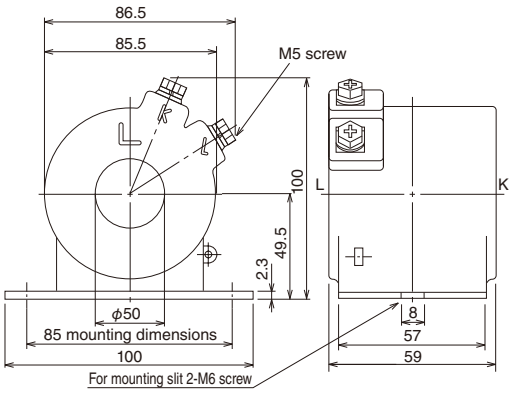

Fig. 4 **CC3L2:** 150, 160, 180, 200A

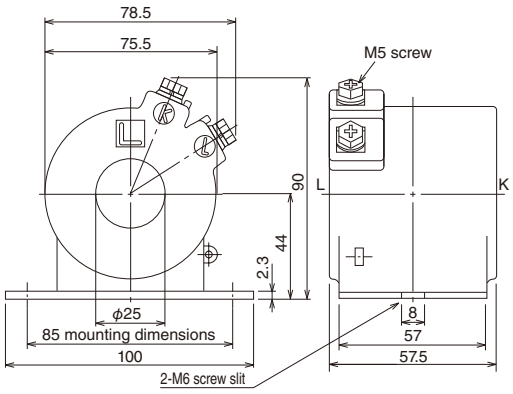

Fig. 5 **CC3L1:** 60, 75A **CC3L2:** 100, 120A
CC3L3: 150, 160, 180, 200A

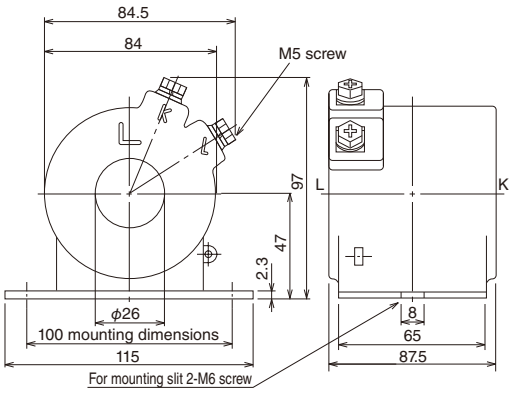

Fig. 6 **CC3L3:** 240, 250, 300, 400A

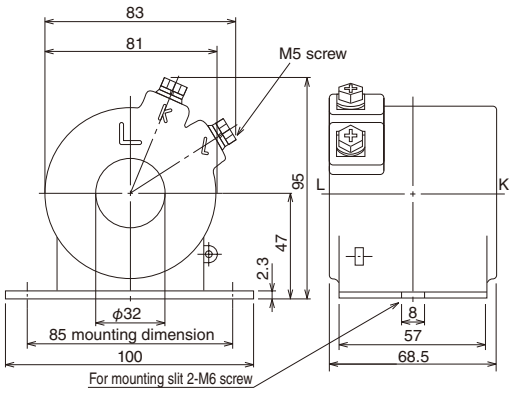

■ Primary conductor through number and current transformation ratio

The table below shows the rated primary current, conductor through numbers, and the maximum nominal cross sectional areas of vinyl electric wire of 600 V (600 V IV wire) that can penetrate through the conductor. (The diameter of solid wire is given in ϕ.) This table satisfies the permissible current flowing through the vinyl electric wire of 600 V at the ambient temperature of 40°C.

● 5VA **CC3L1**

Rated primary current (A)	Primary current (A)	Through number [turns]	Primary conductor size [mm²]
60	10	6	5.5
	15	4	14
	20	3	22
	30	2	22
	60	1	150
75	15	5	8
	25	3	22
	75	1	150
100	10	10	2ϕ
	20	5	8
	25	4	14
	50	2	22
	100	1	150
120	15	8	5.5
	20	6	8
	30	4	14
	40	3	22
	60	2	22
	120	1	150
150	15	10	2ϕ
	25	6	8
	30	5	8
	50	3	22
	75	2	22
	150	1	150
160	20	8	5.5
	40	4	14
	80	2	22
	160	1	150
180	20	9	2ϕ
	30	6	8
	60	3	22
	180	1	150
200	20	10	2ϕ
	25	8	5.5
	40	5	8
	50	4	14
	200	1	150
240	40	6	14
	60	4	38
	80	3	60
	120	2	60
	240	1	325
250	25	10	8
	50	5	22
	125	2	60
	250	1	325
300	30	10	8
	50	6	14
	60	5	22
	75	4	38
	100	3	60
	150	2	60
	300	1	325
400	40	10	8
	50	8	14
	100	4	38
	400	1	325
500	50	10	22
	100	5	60
	125	4	100
	250	2	200
	500	1	500
600	60	10	22
	75	8	38
	100	6	60
	150	4	100
	200	3	150
	300	2	200
	600	1	500
750	75	10	22
	150	5	60
	750	1	200×2 pieces

● 15VA **CC3L2**

Rated primary current (A)	Primary current (A)	Through number [turns]	Primary conductor size [mm²]
100	10	10	5.5
	20	5	14
	25	4	22
	50	2	38
	100	1	200
120	15	8	8
	20	6	14
	30	4	22
	40	3	22
	60	2	38
	120	1	200
150	10	15	3.5
	15	10	5.5
	25	6	8
	30	5	14
	50	3	22
	75	2	38
	150	1	200
160	20	8	8
	40	4	22
	80	2	38
	160	1	200
180	20	9	5.5
	30	6	8
	60	3	22
	90	2	38
	180	1	200
200	20	10	5.5
	25	8	8
	40	5	14
	50	4	22
	100	2	38
	200	1	200
240	30	8	8
	40	6	14
	60	4	38
	80	3	60
	120	2	60
	240	1	325
250	25	10	8
	50	5	22
	125	2	60
	250	1	325
300	30	10	8
	50	6	14
	60	5	22
	75	4	38
	100	3	60
	150	2	60
	300	1	325
400	40	10	8
	50	8	14
	100	4	38
	400	1	325
500	50	10	22
	100	5	60
	125	4	100
	250	2	200
	500	1	500
600	60	10	22
	75	8	38
	100	6	60
	150	4	100
	200	3	150
	300	2	200
	600	1	500
750	75	10	22
	150	5	60
	750	1	200×2 pieces

● 40VA **CC3L3**

Rated primary current (A)	Primary current (A)	Through number [turns]	Primary conductor size [mm²]
150	10	15	3.5
	15	10	5.5
	25	6	14
	30	5	14
	50	3	22
	75	2	38
	150	1	200
160	20	8	8
	40	4	22
	80	2	38
	160	1	200
180	20	9	5.5
	30	6	14
	60	3	22
	90	2	38
	180	1	200
200	25	8	8
	40	5	14
	50	4	22
	100	2	38
	200	1	200
240	40	6	14
	60	4	22
	80	3	38
	120	2	60
	240	1	325
250	25	10	8
	50	5	22
	125	2	60
	250	1	325
300	30	10	8
	50	6	14
	60	5	22
	75	4	38
	100	3	60
	150	2	60
	300	1	325
400	40	10	8
	50	8	14
	100	4	38
	400	1	325
500	50	10	22
	100	5	60
	125	4	100
	250	2	200
	500	1	500
600	60	10	22
	75	8	38
	100	6	60
	150	4	100
	200	3	150
	300	2	200
	600	1	500
750	75	10	22
	150	5	60
	750	1	200×2 pieces

(Note) The indicated rated primary current is applicable when the primary conductor through number is 1 turn.

■ For the though the through number "number of turns"

Typical objects are described.
Other through numbers are also available.

In case of 100 / 5A rated product

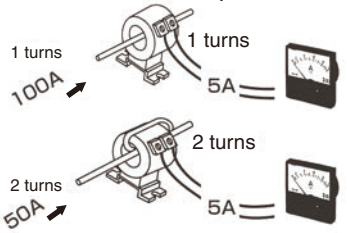

Instrument Transformers
CT with primary winding/CC3P

■ Features

- The transformer employs a double mold structure and is excellent in environmental resistance.
- For the rated load VA, rated products of 5 VA, 15 VA, and 40 VA are lined up
- The direction of setting foot can be changed by 90° according to the mounting direction.

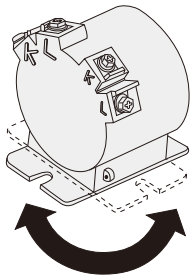

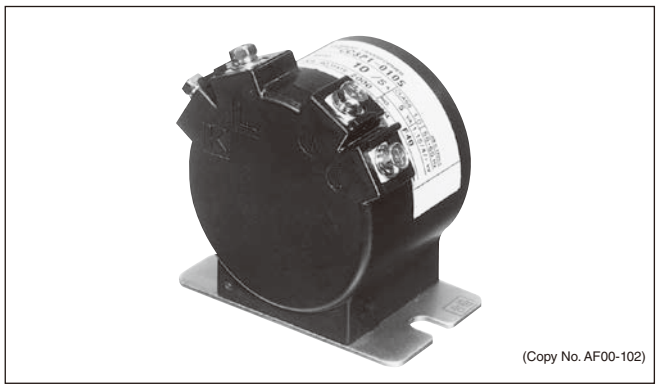

(Copy No. AF00-102)

■ Applications

For general instruments

■ Conforming standards

JIS C1731-1

■ Explanation of type (= product code)

CC3P □ - □ □

Basic type (series name)

Rated load
1: 5VA
2: 15VA
3: 40VA

Secondary current
1: 1A
5: 5A

Rated primary current (example)
005: 5A
7P5: 7.5A
010: 10A
015: 15A

■ When placing an order;

Specify the following items:
(Example)
- Type: CC3P1-0055
- Quantity: 10 units

D1

■ Ratings and specifications

Type	Rated primary current (A) Secondary current 5A	Rated primary current (A) Secondary current 1A	Rated load [VA]	Accuracy class [class]	Rated overcurrent strength [times]	Highest voltage / withstand voltage [kV]	Rated frequency [Hz]	Outline drawing	Mass [kg]
CC3P1	1	1	5	1.0	40	1.15/4/-	50/60	Fig. 1	0.7
	2	2							
	3	3							
	5	5							
	7.5	7.5							
	10	10							
	15	15							
	20	20							
	25	25							
	30	30							
	40	40	5	1.0	40	1.15/4/-	50/60	Fig. 2	1.1
	50	50							
CC3P2	1	1	15	1.0	40	1.15/4/-	50/60	Fig. 2	1.1
	2	2							
	3	3							
	5	5							
	7.5	7.5							
	10	10							
	15	15							
	20	20							
	25	25							
	30	30							
	40	40							
	50	50							
CC3P3	1	1	40	1.0	40	1.15/4/-	50/60	Fig. 2	1.1
	2	2							
	3	3							
	5	5							
	7.5	7.5							
	10	10							
	15	15							
	20	20							
	25	25							
	30	30							
	40	40	40	1.0	40	1.15/4/-	50/60	Fig. 2	1.2
	50	50							

(Note) - The withstand voltage indicates the commercial frequency withstand voltage value/lightning impulse withstand voltage value.

Fuji Electric FA Components & Systems Co., Ltd.
Information subject to change without notice

■ Self-imposed load VA

	CC3P1	CC3P2	CC3P3
Self-imposed load (VA)	3.5 (30A or less) 5.0 (40, 50A)	5.0	6.5

■ External dimensions [unit: mm]

Fig.1 CC3P1: 1 to 30A

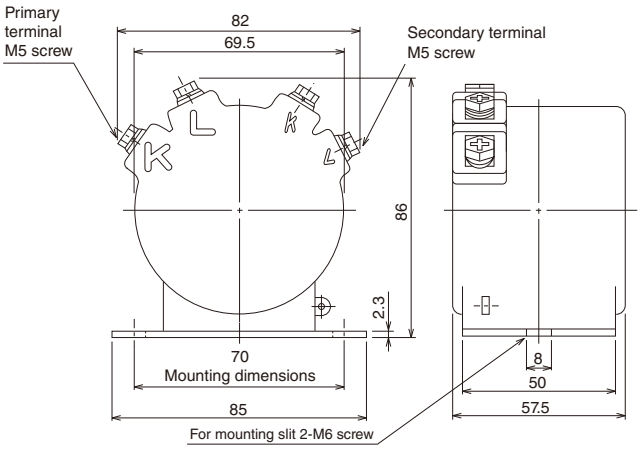

Fig.2 CC3P1: 40, 50A
CC3P2 • CC3P3: 1 to 50A

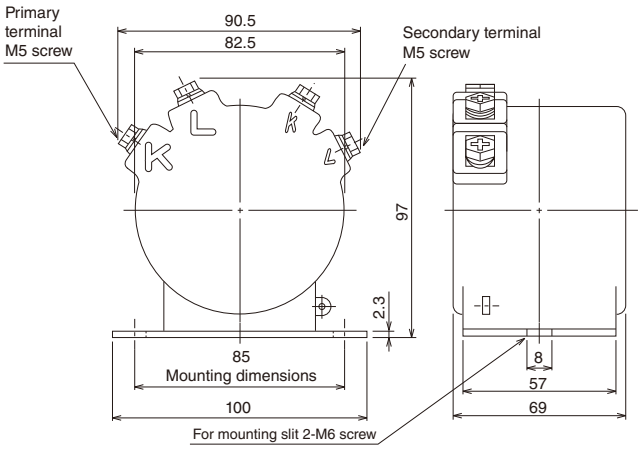

Instrument Transformers
Through-type CT/CC3M

■ Features

- Vertical mounting direction and horizontal mounting direction can easily be replaced with each other according to the space of the board.
- A bus bar can easily be mounted directly because angling and drilling are not necessary. Mounting positions can arbitrarily be changed.

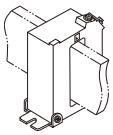

Vertical mounting

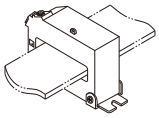

Horizontal mounting

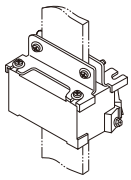

Bus bar mounting

(Copy No. AF00-107)

■ Applications

For general instruments

■ Conforming standards

JIS C1731-1

■ Description of type (= product code)

CC3M □ - □ □

Basic type (series name)

Rated load
1: 5VA
2: 15VA
3: 40VA

Secondary current
5: 5A

Primary current (example)
150: 150A
10X: 1000A
50X: 5000A

■ When placing an order;

Specify the following items:
(Example)
- Type: CC3M2-6005
- Quantity: 1unit

■ Ratings and specifications

Type	Rated primary current (A) / Secondary current 5 [A]	Rated primary current (A) / Secondary current 1 [A]	Rated load [VA]	Accuracy class [class]	Rated overcurrent strength [times]	Highest voltage / withstand voltage [kV]	Rated frequency [Hz]	Dimensions of square window [mm]	Mass [kg]
CC3M1	150	–	5	1.0	40	1.15/4/-	50/60	14×55	1.1
	200								
	300								
	400								0.6
	500								
	600								0.5
CC3M2	150	150	15	1.0	40	1.15/4/-	50/60	14×55	2.1
	200	200	15	1.0	40	1.15/4/-	50/60	14×55	1.1
	250	250							
	300	300							
	400	400	15	1.0	40	1.15/4/-	50/60	14×55	0.6
	500	500							
	600	600							0.5
	750	750							
	800	800	15	1.0	40	1.15/4/-	50/60	14×80	0.9
	1000	1000	15	1.0	40	1.15/4/-	50/60	28×105	1.2
	1200	1200							
	1500	1500							1.1
	2000	2000							1.2
CC3M3	200	200	40	1.0	40	1.15/4/-	50/60	14×55	2.3
	250	250							
	300	300	40	1.0	40	1.15/4/-	50/60	14×55	1.1
	400	400							
	500	500							
	600	600	40	1.0	40	1.15/4/-	50/60	14×80	1.1
	750	750							
	800	800							0.9
	1000	1000	40	1.0	40	1.15/4/-	50/60	28×105	1.2
	1200	1200							
	1500	1500							1.1
	2000	2000							1.2
	2500	–	40	1.0	40	1.15/4/-	50/60	48×160	4.8
	3000								
	4000								6.3
	5000	–	40	1.0	40	1.15/4/-	50/60	88×217	14
	6000								

(Note)∗1 The insulation method of rated primary current 5000 and 60000A uses epoxy resin mold.
- The standard product is mounted vertically.
- The withstand voltage indicates the commercial frequency withstand voltage value/lightning impulse withstand voltage value.
- For Dimensions, refer to pages D1-165 and D1-166.

■ External dimensions [unit: mm]

● Vertical mounting

Fig. 1 **CC3M1:** 150 to 300A
CC3M2: 200 to 300A
CC3M3: 300 to 500A

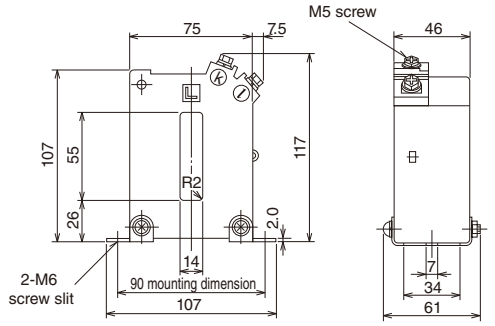

● Horizontal mounting

Fig. 2 **CC3M1:** 150 to 300A
CC3M2: 200 to 300A
CC3M3: 300 to 500A

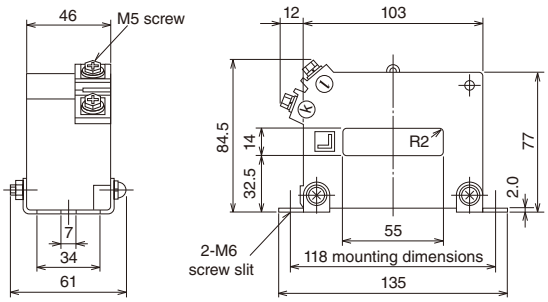

Fig. 3 **CC3M1:** 400 to 600A
CC3M2: 400 to 750A

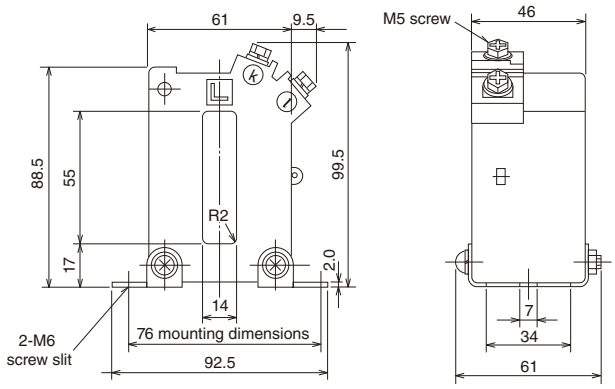

Fig. 4 **CC3M1:** 400 to 600A
CC3M2: 400 to 750A

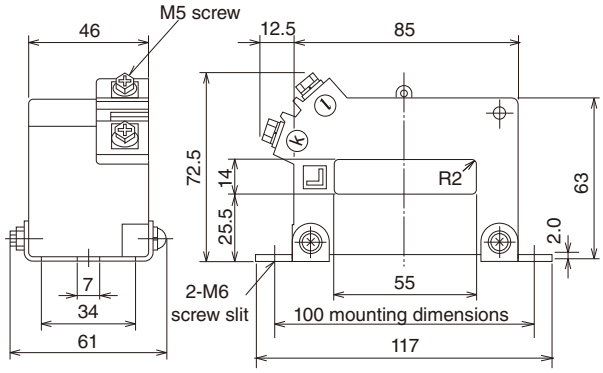

Fig. 5 **CC3M2:** 150A
CC3M3: 200, 250A

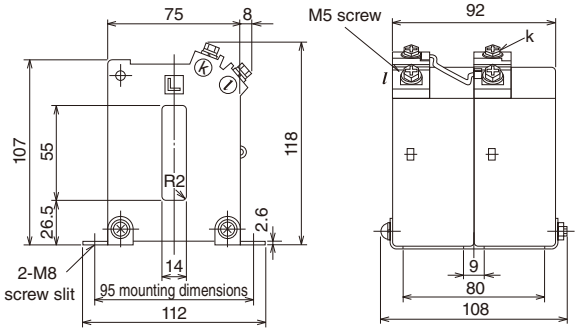

Fig. 6 **CC3M2:** 150A
CC3M3: 200, 250A

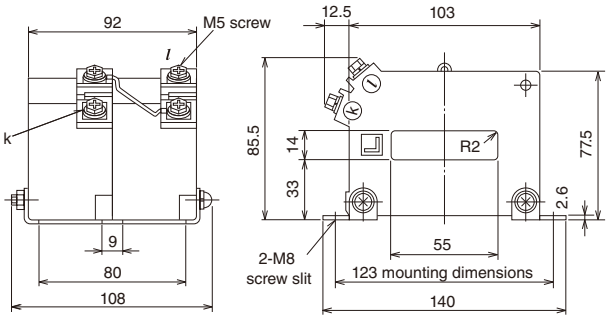

Fig. 7 **CC3M2:** 800A
CC3M3: 600 to 800A

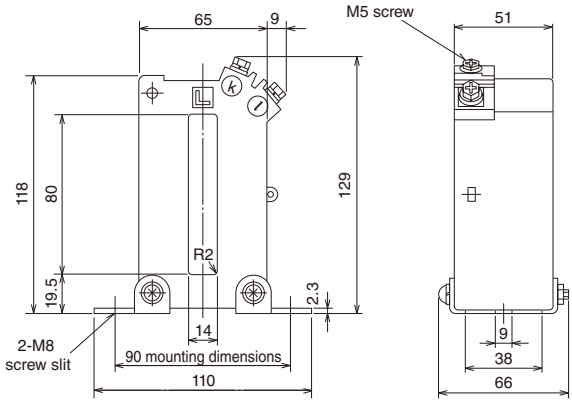

Fig. 8 **CC3M2:** 800A
CC3M3: 600 to 800A

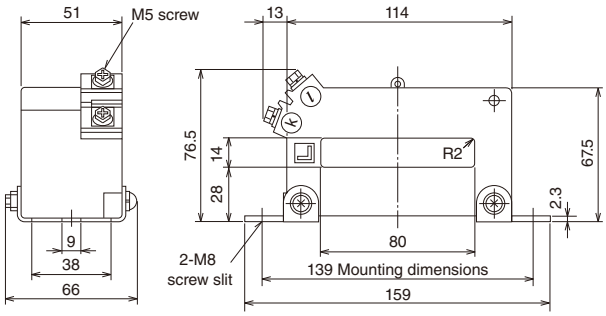

Instrument Transformers
Through-type CT/CC3M

● **Vertical mounting**

Fig. 9 **CC3M2:** 1000 to 2000A
CC3M3: 1000 to 2000A

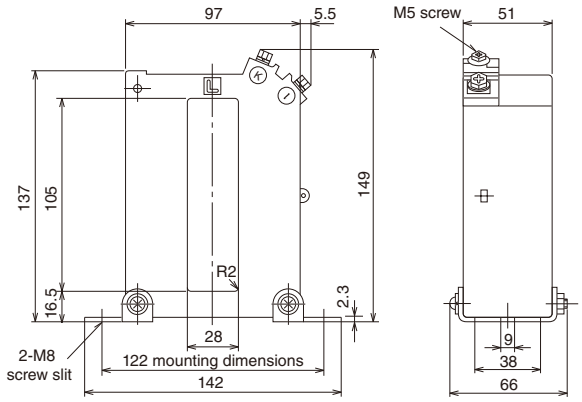

● **Horizontal mounting**

Fig. 10 **CC3M2:** 1000 to 2000A
CC3M3: 1000 to 2000A

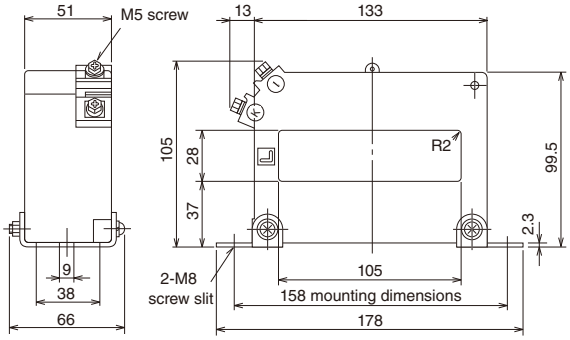

Fig. 11 **CC3M3:** 2500 to 4000A

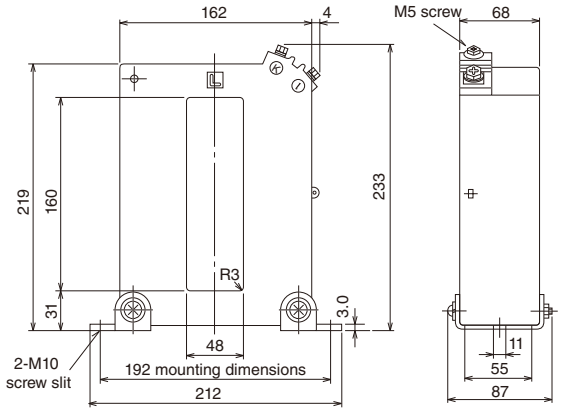

Fig. 12 **CC3M3:** 2500 to 4000A

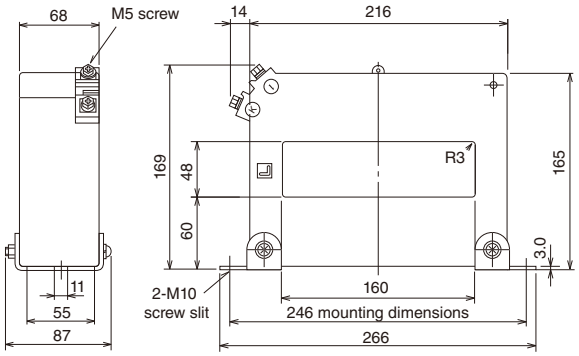

Fig. 13 **CC3M3:** 5000, 6000A

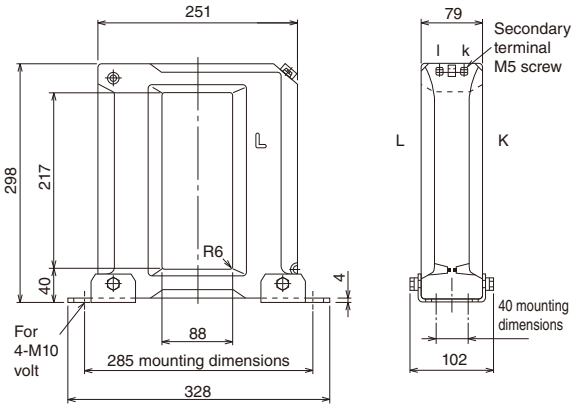

Fig. 14 **CC3M3:** 5000, 6000A

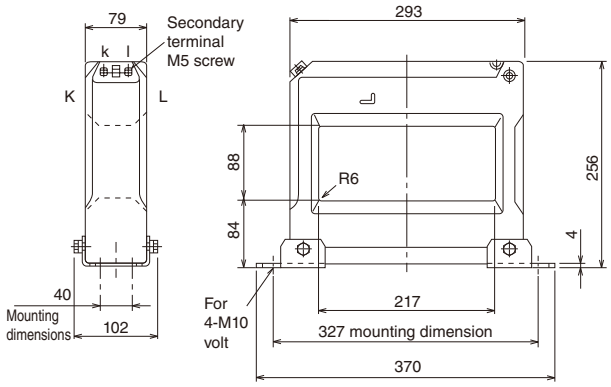

Fuji Electric FA Components & Systems Co., Ltd.
Information subject to change without notice

■ External dimensions [unit: mm]

● Bus bar direct mounting

- Rated products of CC3M2 type 150A and CC3M3 type 200A, 250A, and 4000 to 6000A are not allowed to be mounted directly because the mass of CT is large for the cross sectional dimensions of bus bar.

- Mounting of one bus bar

Fig. 15 **CC3M1:** 150 to 600A **CC3M2:** 200 to 2000A
CC3M3: 300 to 2000A

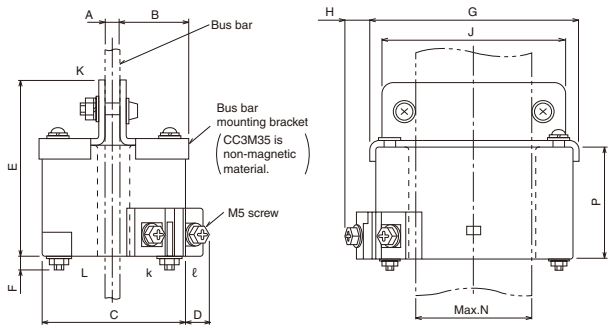

- When mounting a bus bar, arrange it at the center of a through hole to prevent it from contact with the inner surface of the through hole. (Contact with the surface may cause the deformation of CT or insulation breakdown due to the heat of the bus bar.)

- Mounting of two bus bars

Fig. 16 **CC3M2:** 1000 to 2000A **CC3M3:** 1000 to 3000A

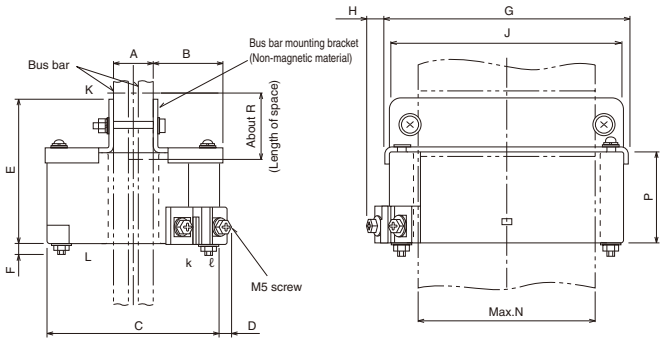

- Dimension table of mounting brackets for one bus bar

Body type	Rated primary current [A]	Mounting bracket type	A	B	C	D	E	F	G	H	J	N	P
CC3M1	150 to 300	CC3M33	5 to 10	33.5	75	7.5	74	10	110	8.5	90	50	46
	400 to 600	CC3M22	5 to 10	26.5	61	9.5	73.5	9	90.5	9.5	81	50	46
CC3M2	200 to 300	CC3M33	5 to 10	33.5	75	7.5	74	10	110	8.5	90	50	46
	400 to 750	CC3M22	5 to 10	26.5	61	9.5	73.5	9	90.5	9.5	81	50	46
	800	CC3M34	5 to 10	27.5	65	9	79	9	121	9	107	75	51
	1000 to 2000	CC3M35	6 to 12	43.5	97	5.5	80.5	10	139	10	129	100	51
CC3M3	300 to 500	CC3M33	5 to 10	33.5	75	7.5	74	10	110	8.5	90	50	46
	600 to 800	CC3M34	5 to 10	27.5	65	9	79	9	121	9	107	75	51
	1000 to 2000	CC3M35	6 to 12	43.5	97	5.5	80.5	10	139	10	129	100	51

(Note) Bus bar mounting is not allowed in CC3M2-1505.
* CC3M2 and CC3M3 1,000 to 2,000 A busbar brackets utilize a non-magnetic material.

- Dimension table of mounting brackets for two bus bars

Body type	Rated primary current [A]	Mounting bracket type	A	B	C	D	E	F	G	H	J	N	P	R
CC3M2	1000 to 2000	CC3M36	15 to 24	39	97	5.5	80.5	10	139	10	129	100	51	40
CC3M3	1000 to 2000	CC3M36	15 to 24	39	97	5.5	80.5	10	139	10	129	100	51	40
	2500, 3000	CC3M37	15 to 45	72	162	4	102	10	223	11	210	150	68	60

* Mounting brackets for two bus bars utilize a non-magnetic material.

(Note) The bus bar is dedicated for CC3M type CT.

- Busbar direct mounting

- CC3M2 150 A and CC3M3 200 A, 250 A, and 4,000 to 6,000 A rated products do not support direct mounting since the mass of the CT is larger than the cross sectional size of the busbar.
- Arrange the busbar at the center of the through hole and mount it so that it does not touch the inner surface of the through hole. Otherwise, the heat of the busbar may cause CT deformation or dielectric breakdown.
- Always make sure to remove the mounting legs. (The mounting legs and busbar direct mounting bracket cannot be utilized simultaneously.)
- The busbar direct mounting bracket always comes in a set of 2. Please use the screws and nuts included with the brackets.

■ When placing an order;

Specify the following items:
(Example)
- Type: Bus bar mounting bracket CC3M22
- Quantity: 1 piece (for 1 unit)

Instrument Transformers
Split type CT/CC2C

Optimal for measuring and monitoring the electric energy of existing equipment.

More and more importance has been put on the grasp of actual conditions of energy consumption and energy saving, e.g., acquisition of the ISO14001 "Environmental management system" certification or reinforcement of efforts for energy management associated with "Revision of the Act on the Rational Use of Energy."
To deal with such demands, this split type CT can simply measure and monitor the electric energy even in the existing board (circuit). It can also be mounted without removing existing cables.
This product is helpful for the management of various electric circuit information and energy saving when it is used in combination with an electronic meter, a transducer, various types of energy monitoring unit, etc.

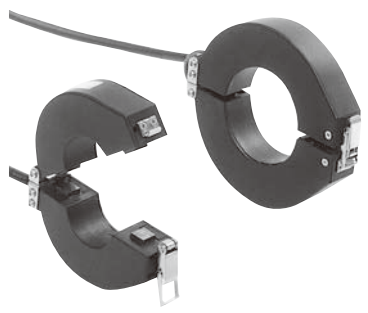

(Copy No. AF99-266)

■ Features

- Construction work is simple because the product can be mounted without removing existing cables.
- The rated load is 0.5 VA for electronic devices such as electronic meter and transducer.

■ Type, ratings and specifications

Type	Shape	Rated primary current (A)	Rated secondary current	Through hole diameter	Rated frequency [Hz]	Excessive electric current resistance amount	Rated load	Dielectric strength	Connection	Mass (g)
CC2C76-8001	Circular type	800	1A	ϕ60	50/60	1.0 In/Continuous 40 In/1.0 second	0.5VA Load resistance 0.5Ω	AC2500V/1min or more (Between the through hole and the output)	VCTF-0.75mm^2 2-core-1000mm	500
CC2C76-12X1		1200	1A							

■ Performances

Type	Models	Linearity output limit	Core saturation limit	Rate error	Phase difference	Insulation resistance	Output protection	Usage ambient conditions
CC2C76-8001 **CC2C76-12X1**	Circular type	–	–	±1%/In ±1.5%/0.2 In ±3%/0.05 In	±80 minutes/In ±100 minutes/0.2In ±200 minutes/0.05In	DC500V/100MΩ or more (Between the through hole and the output)	±1.4Vp A clamp element is built in	-20 to75℃ 80%RH or below No dew condensation is allowed.

■ External dimensions [unit: mm]

CC2C76

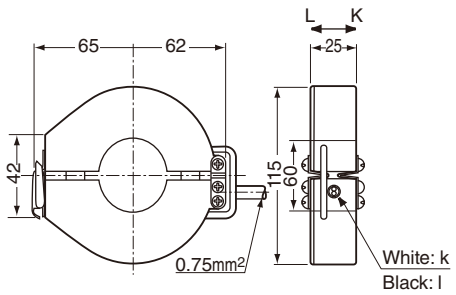

■ Option

Split CT fixing tape Model: CT3B type
(Note) - Non-combustible sponge tape (300 mm in length).
- The through-wire and CT can jointly be fastened by winding them with the tape.
- If you do not use the tape, fasten the through-wire and one side of the case with a binding

■ When placing an order;

Specify the following items:
(Example)
- Type: CC2C76-12X1
- Number of units: 20

*Some models excluded

Handling properties have been more improved.
The specifications dedicated to Fuji Integrated power monitoring unit F-MPC series and specifications for general instruments have been prepared.

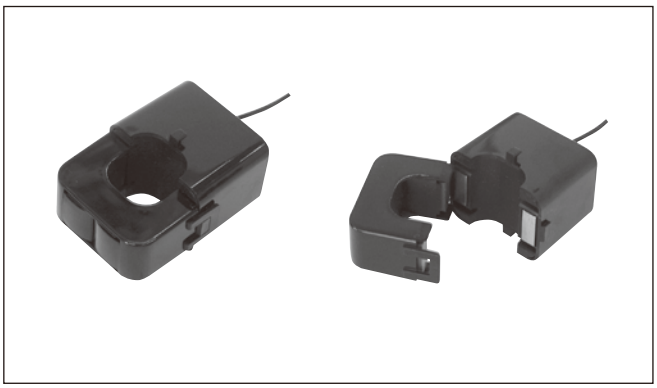

■ Features

- The clamp structure has been reconsidered to make the installation easier.
- To identify the direction of a through-wire easily, large "K->L" is displayed.
- A hook has been installed to fix a through-wire easily with a fixing band.

■ Type, ratings, specifications, price (tax excluded), and delivery time

Type	Type (= Product code)	Rated primary current (A)	Rated secondary current	Through hole diameter	Rated frequency [Hz]	Excessive electric current resistance amount	Rated load	Dielectric strength	Connection	Mass (g)
F-MPC only	**CC2D81-0057**	5	7.34mA	ϕ10	50/60	40 In/1 second	0.2693mVA Load resistance 5Ω	AC2,000V/1min (Between the core and the output)	Heat-resistance vinyl electric wire AWG22×1,000mm attached	45
	CC2D81-0506	50	73.4mA	ϕ10	50/60	10 In/1 second	26,93mVA Load resistance 5Ω	AC2,000V/1min (Between the core and the output)	Heat-resistance vinyl electric wire AWG22×1,000mm attached	45
	CC2D71-1004	100	33.33mA	ϕ16	50/60	10 In/ Continuous	11.1mVA Load resistance 10Ω	AC2,000V/1min (Between the core and the output)	Heat-resistance vinyl electric wire AWG22×1,000mm attached	80
	CC2D65-2008	200	66.7mA	ϕ24	50/60	40 In/1 second	44.4mVA Load resistance 10Ω or below	AC2,000V/1min (Between the core and the output)	Heat-resistance vinyl electric wire AWG18 1,000mm attached	200
	CC2D54-4009	400	133.3mA	ϕ36			0.18VA Load resistance 10Ω or below	AC2,000V/1min (Between the core and the output)	Heat-resistance vinyl electric wire AWG18 1,000mm attached	300
	CC2D52-8009	800	133.3mA	ϕ60	50/60	40 In/1 second	0.178VA Load resistance 10Ω	AC2,000V/1min (Between the core and the output)	Heat-resistance vinyl electric wire AWG22×1,000mm attached	500
For general use	**CC2D74-1001** **CC2D74-2001** **CC2D74-4001**	100 200 400	1A 1A 1A	ϕ36	50/60	40 In/1 second	0.5VA Load resistance 0.5Ω	AC2,000V/1min or more (Between the core and the output)	Heat-resistance vinyl electric wire AWG18 1,000mm attached	300

■ Performances

Type	Type (= Product code)	Rate error	Phase difference	Insulation resistance	Output protection	Usage ambient conditions
F-MPC only	CC2D81-0057	±1%/In ±1.5%/0.2In	150±90 minutes/In 180±120 minutes/In	DC500V/100MΩ or more (Between the core and the output lead line)	7.5Vp A clamp element is built in	-20 to+75℃ 80%RH or below No dew condensation is allowed.
	CC2D81-0506	±1%In ±1.5%/0.2In	150±90 minutes/In 180±120 minutes/In	DC500V/100MΩ or more (Between the core and the output lead line)	7.5Vp A clamp element is built in	-20 to+75℃ 80%RH or below No dew condensation is allowed.
	CC2D71-1004	±1%In ±1.5%/0.2 In	1±1°/In 1±1.5°/0.2In	DC500V/100MΩ or more (Core and output lead)	7.5Vp A clamp element is built in	−20 to +75°C with 80%RH or below No dew condensation is allowed.
	CC2D65-2008	±1%In ±1.5%/0.2 In	±60 minutes/In ±90 minutes/0.2In	DC500V/100MΩ or more (Between the core and the output lead line)	3Vp A clamp element is built in	-20 to+75℃ 80%RH or below No dew condensation is allowed.
	CC2D54-4009	±1%In ±1.5%/0.2 In	±60 minutes/In ±90 minutes/0.2In			
	CC2D52-8009	±1%In ±1.5%/0.3 In	±60 minutes/In ±90 minutes/0.2In	DC500V/101MΩ or more (Core and output lead)	3Vp A clamp element is built in	−20 to +75°C with 80%RH or below No dew condensation is allowed.
For general use	CC2D74-1001	±1%In ±1.5°/0.2In	90±90 minutes/In 120±120 minutes/0.2In	DC500V/100MΩ or more (Between the core and the output lead line)	1.4Vp A clamp element is built in	-20 to+50℃ 80%RH or below No dew condensation is allowed.
	CC2D74-2001		60±60 minutes/In 90±90 minutes/0.2In			
	CC2D74-4001		±80 minutes/In ±100 minutes/0.2In			

Instrument Transformers
Split type CT/CC2D

■ External dimensions [unit: mm]

●CC2D81 type

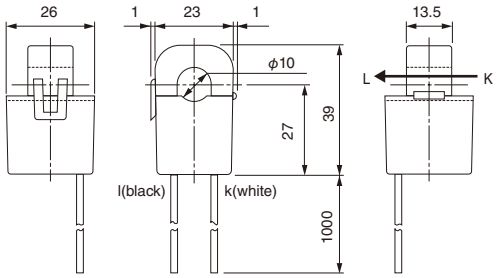

●CC2D65 type

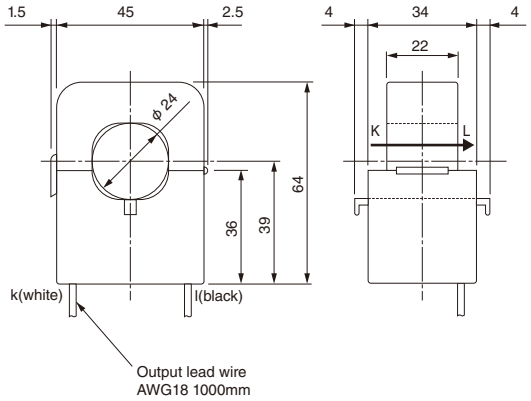

●CC2D54 / CC2D74 type

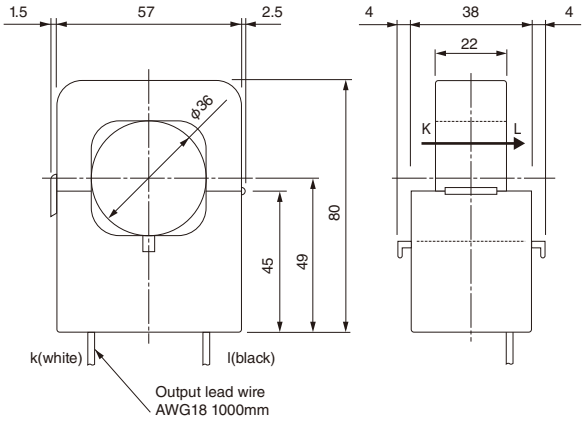

●CC2D71 type

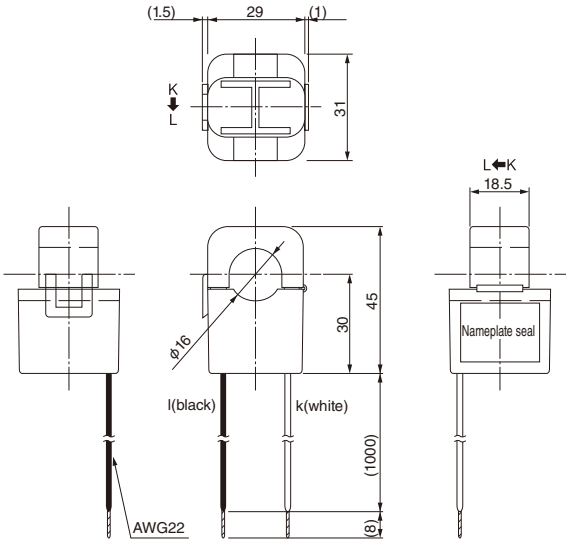

●CC2D52 type

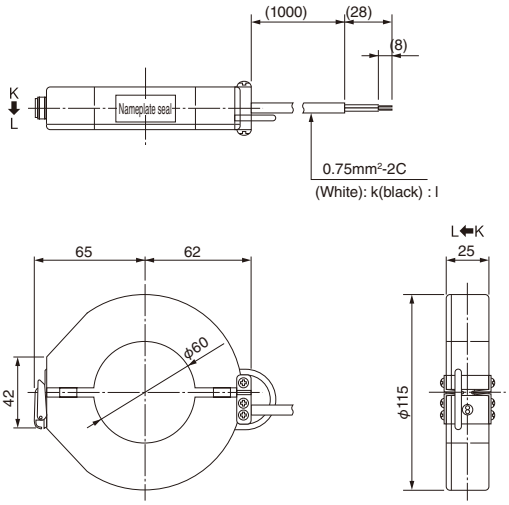

■ When placing an order;

Specify the following items:
(Example)
- Product name: Split type low-pressure transformer
- Type: CC2D81-0057
- Quantity: 100 units

Instrument Transformers
Screw terminal type of split type transformer/CC2E

A split type transformer is an attached component of the energy saving monitoring unit. The CC2E series allows you to perform optimal wiring arbitrarily under various conditions and makes it possible to measure and monitor the electric energy without removing existing cables.

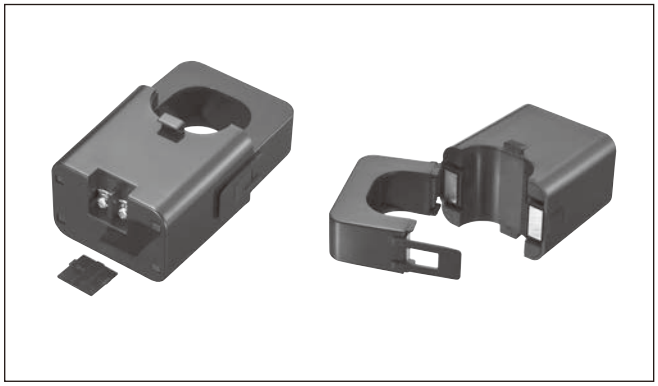

■ Overview and features

- M3 terminal screws and terminal cover are possessed.
- Employment of a clamp structure makes the installation easy.
- To identify the direction of a through-wire easily, large "K->L" has been displayed.
- A hook has been installed to fix a through-wire easily with a fixing band.

■ Type, ratings and specifications

Type	Type	Rated primary current (A)	Rated secondary current (A)	Through hole diameter	Rated frequency [Hz]	Excessive electric current resistance amount	Rated load	Dielectric strength	Terminal, electric wire connected	Mass (g)
For general use	**CC2E74-1001**	100	1	ϕ36	50/60	In/Continuous 40 In/1 second	0.5VA Load resistance 0.5Ω	AC2,000V/1min (Between the core and the output terminal)	M3 AWG26 to 18 stranded wire 1.25mm² stranded wire with crimp-style terminal Screw tightening torque of 0.3 to 0.4N/m	about 250
	CC2E74-2001	200	1							About 250
	CC2E74-4001	400	1							About 250
	CC2E74-6001	600	1							About 265

■ Performances

Type	Type	Rate error	Phase difference	Insulation resistance	Output protection	Usage ambient conditions
For general use	**CC2E74-1001**	±1%/In ±1.5%/0.2In	90 minutes ± 90 minutes/In 120 minutes ± 120 minutes/0.2 In	DC500V/100MΩ or more (Between the core and the output terminal)	6.5V A clamp element is built in	–20°C to +75°C 80%RH or below No dew condensation is allowed.
	CC2E74-2001		60 minutes ± 60 minutes/In 90 minutes ± 90 minutes/0.2 In			
	CC2E74-4001		60 minutes ± 60 minutes/In 90 minutes ± 90 minutes/0.2 In			
	CC2E74-6001		60 minutes ± 60 minutes/In 90 minutes ± 90 minutes/0.2 In			

■ External dimensions [unit: mm]

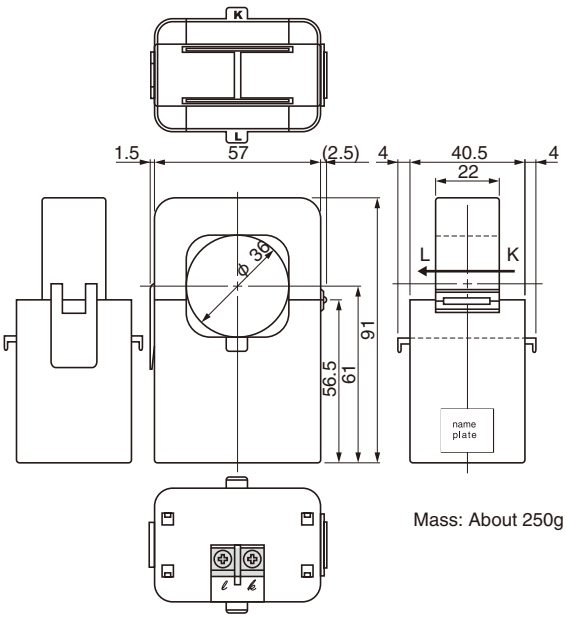

Mass: About 250g

■ When placing an order;

Specify the following items:
(Example)
- Product name: Split type low-pressure transformer Screw terminal type
- Type: CC2E74-1001
- Number of units: 100

Instrument Transformers
Circular window through type transformer/CC2B Fuji Integrated power monitoring unit: F-MPC series

A dedicated transformer that is connected to the power distribution / power monitoring unit F-MPC04.
A through type CT available to measure 200 A and 400 A on the primary side.

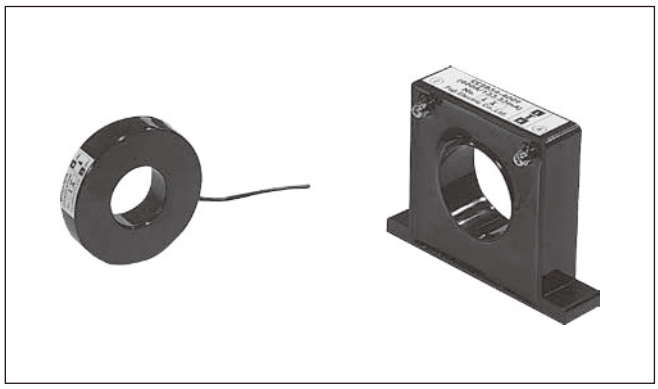

■ Type, ratings and specifications

Type	Shape	Rated primary current (A)	Rated secondary current	Through hole diameter	Rated frequency [Hz]	Excessive electric current resistance amount	Rated load	Dielectric strength	Connection	Mass (g)
CC2B65-2008	Circular through type	200	66.67mA	ϕ24	50/60	1.2 In/Continuous 40 In/1.0 second	44.4mVA Load resistance of 10Ω or less	AC2500V/1min (Between the through hole and the output lead line)	Heat-resistance vinyl electric wire 0.3mm²×1000mm attached	60
CC2B54-4009		400	133.33mA	ϕ36			177.8mVA Load resistance of 10Ω or less	AC2500V/1min (Between the through hole and the output terminal)	M3 terminal screw	180

■ Performances

Type	Shape	Linearity output limit	Core saturation limit	Rate error	Phase difference	Insulation resistance	Output protection	Usage ambient conditions
CC2B65-2008	Circular through type	–	–	±1%/In ±1.5%/0.2In	±60 minutes/In ±90 minutes/0.2In	DC500V/100MΩ or more (Between the through hole and the output lead line)	Not built in.	-20 to+75℃ 80%RH or below No dew condensation is allowed.
CC2B54-4009						DC500V/100MΩ or more (Between the through hole and the output terminal)		

■ Precautions for use

- If no output protection element has been incorporated into a product, be sure to connect the rated load to it and then make the primary current flow.
  If primary current flows without connecting the rated load, a high voltage is generated at the output terminal. It is dangerous. In addition, it may cause a failure such as short-circuit of secondary winding.

Circular window through type transformer/CC2B Fuji Integrated power monitoring unit: F-MPC series

■ External dimensions [unit: mm]

CC2B65

When current flows into the through hole from K to L, the polarity of the output terminal is as follows: k = position, and l = negative.

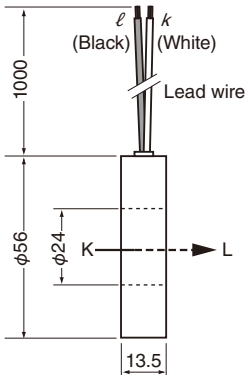

CC2B54

When current flows into the through hole from K to L, the polarity of the output terminal is as follows: k = position, and l = negative.

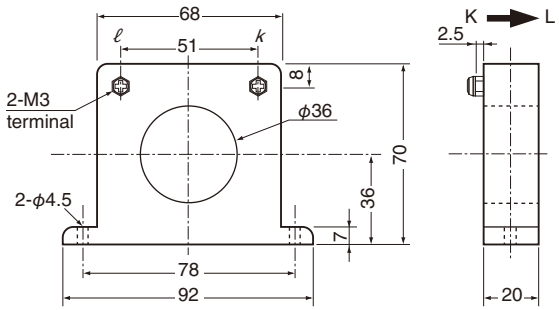

■ Option

CC2B65 mounting brackets, Type CT3A

CC2B65-2008 + CT3A

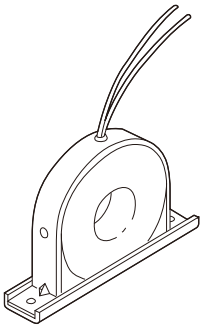

CT3A

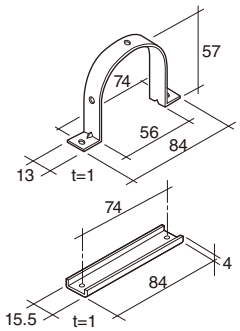

■ When placing an order;

Specify the following items:
(Example)
- Type: CC2B65-2008
- Number of units: 20

Instrument Transformers
Potential transformer/CD32, 34, 36

■ Features

- Employment of double mold structure. The transformer is excellent in heat resistance and environmental resistance.
- Transformer of 15 VA and transformer of 100 VA belong to 1.0/1P class, and transformer 50 VA, 3.0/3P class.
- Transparent insulation covers can be attached to the terminal area and fuse area. (The insulation covers are optional.)

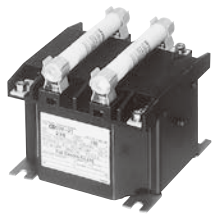

(Copy No. AF00-106)

With fuse

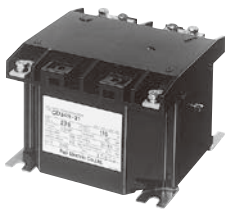

(Copy No. AF00-215)

Without fuse

■ Applications

For general instruments, and for relays

■ Conforming standards

JIS C1731-2, JEC 1201

■ Type, ratings and specifications

Shape	Type	Rated load [VA]	Rated primary voltage [V]	Rated secondary voltage [V]	VT fuse Type	VT fuse Rating	Outside dimensions	Mass [kg]	Product code (= Type)
Without fuse	**CD3□N**	15	220	110	–	–	Fig. 2	3.5	**CD32N-21**
			440	110					**CD32N-41**
		50	220	110			Fig. 2	3.5	**CD34N-21**
			440	110					**CD34N-41**
		100	220	110			Fig. 3	8.5	**CD36N-21**
			440	110					**CD36N-41**
		15/50/100	*	*			–	–	**CD3□N-Different voltage**
With fuse	**CD3□F**	15	220	110	CD3F	0.6kV/T2A100kA (Conforming to JIS C 4604 and JEC 2330)	Fig. 1	3.5	**CD32F-21**
			440	110					**CD32F-41**
		50	220	110			Fig. 1	3.5	**CD34F-21**
			440	110					**CD34F-41**
		100	220	110			Fig. 4	8.5	**CD36F-21**
			440	110					**CD36F-41**
		15/50/100	*	*			–	–	**CD3□F-Different voltage**

(Note) The existing type CT3 has been changed.
* See "■ Manufacture range of special transformation ratio" below.

■ Various characteristics of Potential transformer

Type		CD32□		CD34□		CD36□	
Rated voltage [V]		220	440	220	440	220	440
Limiting load [VA]	Continuous rating	100		100		200	
	2-second rating	200		200		500	
Error at the time of limiting load [%]	Continuous rating	-5		-5		-5	
	2-second rating	-10		-10		-10	
Primary fuse	Rated current [A]	T2		T2		T2	
	Breaking current [kA]	100		100		100	
% impedance voltage	% resistance voltage [%]	0.80		2.67		1.99	
	% Reactance voltage [%]	0.32		1.07		0.49	
	% impedance voltage [%]	0.86		2.88		2.05	
Dielectric strength [kV]	Power-frequency withstand voltage / Lightning impulse withstand voltage value	2 / -	3 / -	2 / -	3 / -	2 / -	3 / -
Accuracy [class]		1.0•1P		3.0•3P		1.0•1P	

(Note) – The 2-second duty is a value taking into account the duty of 10 cycles, each of which 0.2-second energization is performed at internals of 1.8 seconds.

■ Manufacture range of special transformation ratio

Type	Manufacturing voltage range (V)	
	Rated primary voltage	Rated secondary voltage
CD32N	63.5 to 550	100 to 220V 100/√3 to 120/√3
CD34N	100/√3 to 480/√3	
CD32F	190 to 550	
CD34F	380/√3 to 480/√3	
CD36N	100 to 600	
	200/√3 to 480/√3	
CD36F	200 to 600	
	380/√3 to 480/√3	

■ Description of type (= product code)

CD3 □ □ - □ 1

- Basic type
- Rated load
  2: 15VA 6: 100VA
  4: 50VA
- Fuse
  F: With fuse
  N: Without fuse
- Secondary voltage
  1: 110V
- Primary voltage
  2: 220V
  4: 440V

■ When placing an order;

Specify the following items:
(Example)
- Type: CD32F-21
- Quantity: 1 unit

Fuji Electric FA Components & Systems Co., Ltd.
Information subject to change without notice

■ Insulation cover (option)

Type	Applicable models
CD3C	CD32, CD34
CD3D	CD36

- Insulation cover mounting procedure

When mounting the insulation cover, spread part A of the cover a little outward and then insert the projection of VT into the mounting hole of the cover.

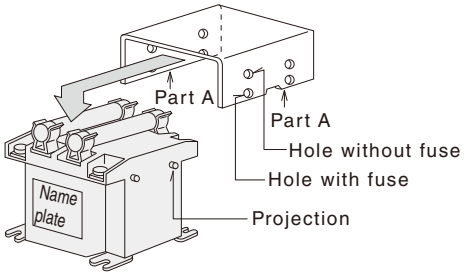

■ VT fuse (option)

Type	Classification of delivery time
CD3F	◎

(Note) - Two VT fuses are needed for one unit.

◎	Stock products	○	Standard products		Order-received product

■ External dimensions [unit: mm]

Fig. 1 **CD32F, CD34F**

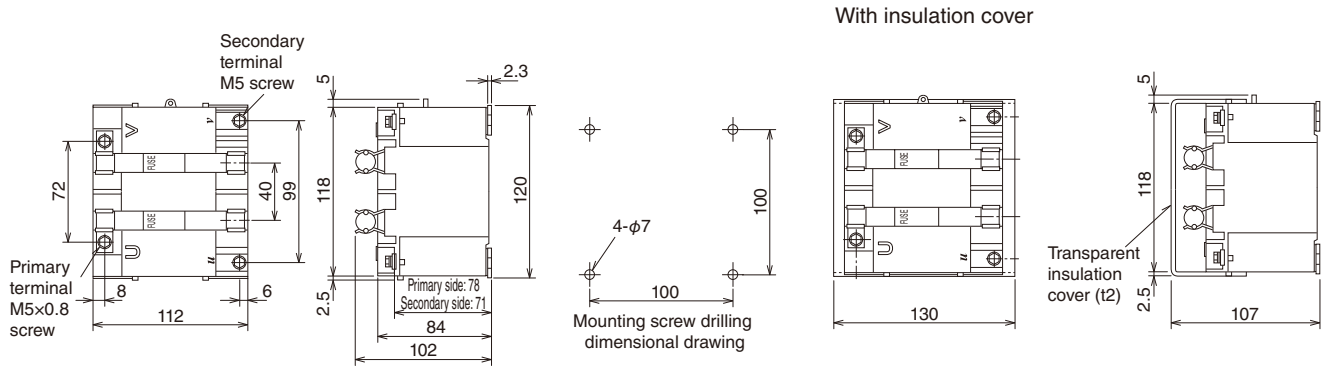

Fig. 2 **CD32N, CD34N**

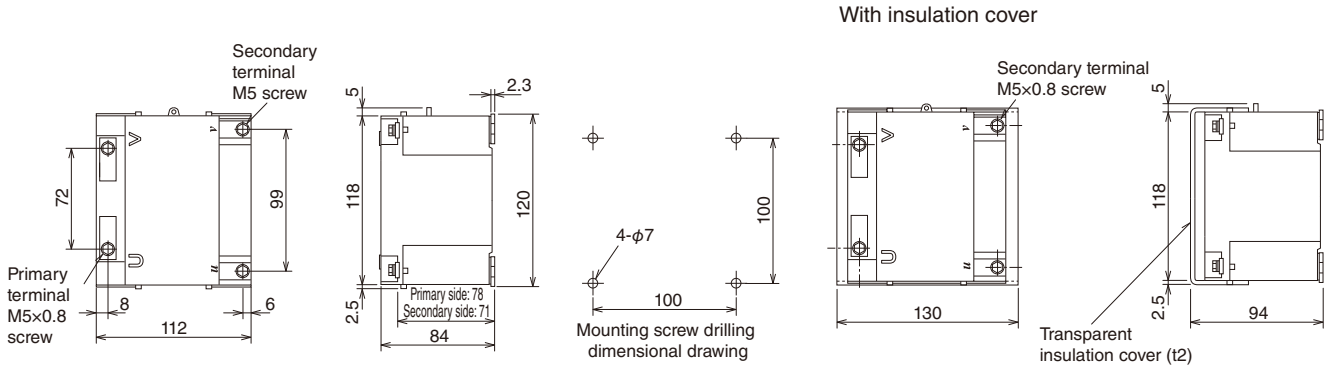

Fig. 3 **CD36N type**

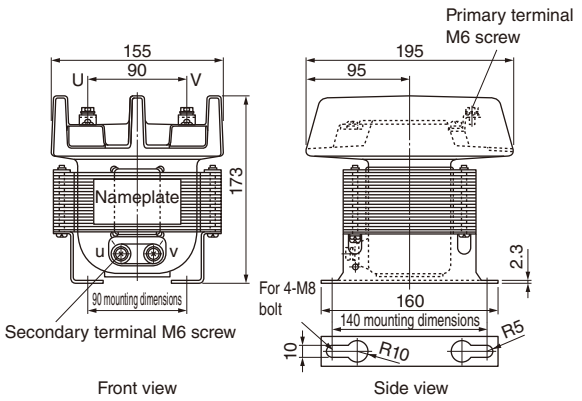

Fig. 4 **CD36F type**

CD36□ type with insulation cover

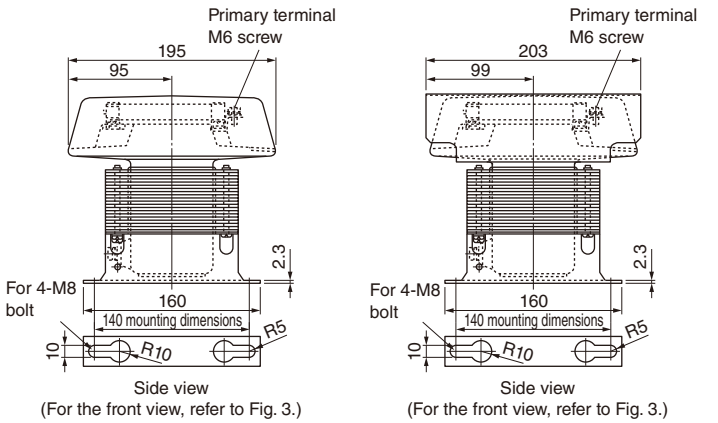

Instrument Transformers
Insulation cap for low-pressure transformer/SB-4064-23

Applicable for M4 and M5 terminal screws.

■ Features

- The exposure of the live section is prevented because the whole terminal area is covered.
- The translucent cover allows you to confirm the tightened state of the terminals with it mounted.

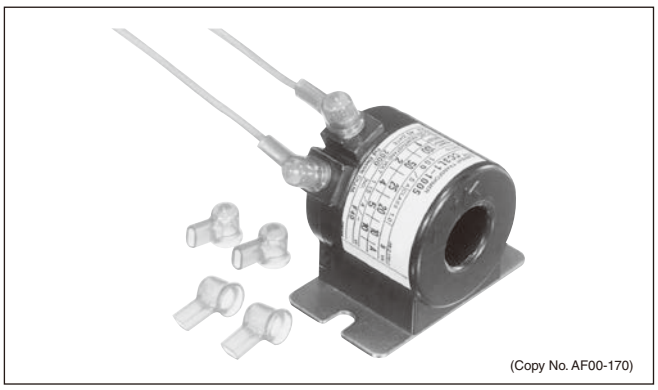
(Copy No. AF00-170)

■ Applicable models

Type	Applicable models	packing quantity	Classification of delivery time
SB-4064-23	Low-pressure transformer CC3L CC3P CC3M	100	◎

◎ Stock products ○ Standard products Order-received product

■ When placing an order;

Specify the following items:
(Example)
- Type: SB-4064-23
- Quantity: 1 (100 pieces) An order is received on a one-bag basis.

■ External dimensions [unit: mm]

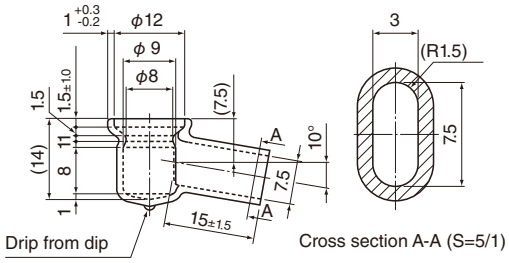

■ For special environments

Potential transformers are used in wide range of applications and, therefore, their usage environments are various. Fuji Potential Transformer is manufactured based on the "standard use condition" shown at right.
If the product is used in a condition different from this, the following consideration is required.

● Standard use condition (JIS and JEC standard values)

- Ambient temperature	–20°C to 40°C (Average ambient temperature for 24 hours: 35°C or less)
- Humidity	No dew condensation is allowed
- Elevation	1000m or less
- Ambient environment	Place with low dust/corrosive gas/salty wind (salt content)

Special environment	Specifications	Applicable models
High temperature and high humidity	Tropical treatment Performances such as dielectric strength may deteriorate under high-humid condition. To prevent this, the potential transformers have been specially coated for mold prevention and moisture prevention and plated for corrosion-resistance.	Transformer - CC3L, CC3P, CC3M Potential transformer - CD32, 34, 36
Corrosive gas	Enhanced corrosion resistance Generally, a transformer is housed in a case of a corrosion-resistant type protection structure when it is used in an atmosphere with much corrosive gas. However, when it is used in a place where the amount of corrosive gas is very small, the enhanced corrosion resistant specification is applicable as a simple method. In enhanced corrosion-resistant potential transformers, their metallic portions are plated for corrosion-resistance.	The standard specifications are applicable for the following models: Transformer - CC3L, CC3P, CC3M Potential transformer - CD32, 34, 36
Highland	When transformers are used at a highland of over 1000 m elevation, withstand voltage or reduction of current is required. The ANSI Standards stipulate that the withstand voltage value and rated current value of CT are to be applied by multiplying them by constants shown in the table at right.	
Fouling and wetting	The mold materials used for VT and CT cannot be used at a heavily fouling place or at a place with the humidity of 85% or more (dew condensation) because they generate a tracking phenomenon specific to organic materials. The Installation of a space heater, e.g., Fuji's CH5 series, is therefore essential under the environment of dew condensation.	
High temperature	When using a transformer at an ambient temperature exceeding that in the standard usage status, make a selection as shown below. - Select a CT and a CT ratio that are larger than those specified. - Select a CT whose overcurrent strength is larger than that specified. - Reduce the VT and load in use.	
Low temperature	When using a transformer at a low temperature below the ambient temperature in the standard status, use a standard product of double mold type or epoxy resin mold type. At the temperature of -20°C or below, increase the temperature to -20°C or above by using Fuji's CH5 series space heater, etc.	

Elevation (m)	Correction value	
	Withstand pressure value	Rated current of CT
1000	1.00	1.00
1500	0.95	0.985
3000	0.80	0.94

■ Application to overseas standards

Internationally standardized products (IEC, and ANSI standards) are manufactured when they are specified.
If you order an internationally specified product, specify the applicable standards, ratings (current transformation ratio and transformation ratio), accuracy class, and rated load (VA). Fuji's standard specifications are shown in the table below.

● Applicable standards

	Current transformer	Potential transformer
IEC Standards	IEC 60044-1	IEC 60044-2
ANSI Standards	ANSI C57.13	

● Standard specification list

Models	Type	IEC Standards			ANSI Standards	
		Accuracy class Acc. Class	Rated load [VA] Rated Output	Insulation class Ins. Class [kV]*	Accuracy class / Load Acc. Class-Output	Insulation class Ins. Class [kV]
Current transformer	**CC3P1**	1.0	5	0.72/3/-	1.2B-0.2	BIL10
	CC3P2		15		1.2B-0.5	
	CC3P3		30		1.2B-0.9	
	CC3L1		5		1.2B-0.2	–
	CC3L2		15		1.2B-0.5	
	CC3L3		30		1.2B-0.9	
	CC3M2		15		1.2B-0.5	–
	CC3M3		30		1.2B-0.9	
Potential transformer	**CD32N**	1.0	15	3/-	1.2W	BIL10
	CD32F					
	CD34N	3.0	50	3/-	–	–
	CD34F					
	CD36N	1.0	75	3/-	1.2X	BIL10
	CD36F					

(Note) * The insulation class indicates the maximum voltage/commercial frequency withstand voltage/lightning impulse withstand voltage.
* Contact us for the specifications other than those in the table above.

Instrument Transformers
Maintenance and Inspection

■ Maintenance

Perform the maintenance work of transformer during the regular inspection accompanied by power interruption.

(1) Removal of dust
Carefully remove dust adhering to the surface of the transformer.
When wiping dust off, use gauze, etc., dipped in demineralized water. Do not use city water, detergent, chemically treated cloth, etc., because surface active agent included in them causes insulation deterioration.

(2) If connections are loosened, re-tighten them.
In addition, tighten terminal screws to the torque below.

Type		Primary terminal		Secondary terminal	
		Screw size	[N•m]	Screw size	[N•m]
Current transformer	**CC3L**	–	–	M5	2.84 to 3.72
	CC3P	M5	2.84 to 3.72	M5	2.84 to 3.72
	CC3M	–	–		
	CC2E	–	–	M3	0.3
Potential transformer	**CD32, 34**	M5	1.37 to 1.76	M5	1.37 to 1.76
	CD36	M6	2.35 to 3.04	M6	2.35 to 3.04

■ Information and request before use

(1) Fuse blown out on the primary side of the potential transformer
Not a few accidents occur, resulting in insulation breakdown of VT, due to burnout caused by improper connection or overload in the circuit in use or due to the deterioration of insulation caused by an excessive abnormal phenomenon. Fuse on the primary side is blown out by the inter-phase short-circuit current.
When a fuse is blown out, abnormality may occur inside the VT. Therefore, be sure to confirm the insulation performance of the VT. If abnormality is found, the VT must be replaced.
If the insulation performance of the VT is found to be normal, fuse is blown out due to deterioration of fuse or exciting rush current. Therefore, replace the fuse (replace all the fuses if only one fuse has been blown out). However, if a fuse is blown out again in a short period of time after the replacement of the fuses, there is a high possibility that insulation breakdown may occur inside the VT. Replace the VT.

(2) Impact on the secondary circuit devices in cases of short-circuit accident
Occurrence of a short-circuit accident makes a heavy current flow to the secondary circuit of the transformer. Fully inspect the instruments, relays, etc., connected to the secondary circuit of the transformer, before operating them again. If an overcurrent tripping system is adopted for a high pressure cutout to use a static relay, be sure to inspect contact b of the relay.

■ Maintenance and Inspection

An accident that may occur in the transformer itself causes a failure in supplying power and production failure. Therefore, implement the maintenance inspection accurately to prevent the accidents. To operate the maintenance and inspection, it is recommended to follow Material No. 164 "Guidelines for maintenance and inspection of potential transformers" issued by The Japan Electrical Manufacturer's Association.

■ Recommended renewal period

Material No. 164 issued by The Japan Electrical Manufacturer's Association specifies a recommended renewal period. It is recommended to follow this renewal. However, this value is not an assurance value. The following recommended renewal period is specified on the assumption that the daily inspection and regular inspection are to be implemented.

- Recommended renewal period of potential transformers (number of years in use)
  Mold type (including other dry type): 15 years

Comparison table between new and old types of low-pressure V/CT

■ Double mode type of circular window through type low-pressure transformer 1150 V 1.0 class

Applicable model				
Ratings		Old product Type		New product Type
		FRC series	CK series	
Secondary current 5A	60/5A, 75/5A	–	–	CC3L1-□□□5
	100/5A, 120/5A	FRC5-26	CK5-26	CC3L1-□□□5
	150/5A, 200/5A	FRC5-26	CK5-26	CC3L1-□□□5
	250/5A, 300/5A	FRC5-30	CK5-32	CC3L1-□□□5
	400/5A	FRC5-30	CK5-32	CC3L1-4005
	500/5A	FRC5-40	CK5-50	CC3L1-5005
	600/5A, 750/5A	FRC5-40	CK5-50	CC3L1-□□□5
Secondary current 1A	60/1A, 75/1A	–	–	CC3L1-□□□1
	100/1A, 120/1A	FRC5-26	CK5-26	CC3L1-□□□1
	150/1A, 200/1A	FRC5-26	CK5-26	CC3L1-□□□1
	250/1A, 300/1A	FRC5-30	CK5-32	CC3L1-□□□1
	400/1A	FRC5-30	–	CC3L1-4001
Secondary current 5A	100/5A, 120/5A	–	–	CC3L2-□□□5
	150/5A	FRC15-26	CK15-26	CC3L2-1505
	180/5A, 200/5A	FRC15-26	CK15-26	CC3L2-□□□5
	240/5A, 250/5A, 300/5A	FRC15-30	CK15-32	CC3L2-□□□5
	400/5A	FRC15-30	CK15-32	CC3L2-4005
	500/5A	FRC15-40	CK15-50	CC3L2-5005
	600/5A	FRC15-40	CK15-50	CC3L2-6005
	750/5A	–	CK15-50	CC3L2-7505
Secondary current 1A	100/1A, 120/1A	–	–	CC3L2-□□□1
	150/1A	FRC15-26	CK15-26	CC3L2-1501
	180/1A	FRC15-26	CK15-26	CC3L2-□□□1
	240/1A, 250/1A, 300/1A	FRC15-30	CK15-32	CC3L2-□□□1
	400/1A	FRC15-30	–	CC3L2-4001
Secondary current 5A	150/5A, 180/5A, 200/5A	FRC40-26	CK40-26	CC3L3-□□□5
	240/5A, 250/5A	FRC40-30	CK40-32	CC3L3-□□□5
	300/5A	FRC40-30	CK40-32	CC3L3-3005
	400/5A	FRC40-30	CK40-32	CC3L3-4005
	500/5A	FRC40-40	CK40-50	CC3L3-5005
	600/5A	FRC40-40	CK40-50	CC3L3-6005
	750/5A	–	CK40-50	CC3L3-7505
Secondary current 1A	150/1A, 180/1A, 200/1A	FRC40-26	CK40-26	CC3L3-□□□1
	240/1A, 250/1A	FRC40-30	CK40-32	CC3L3-□□□1
	300/1A	FRC40-30	CK40-32	CC3L3-3001
	400/1A	FRC40-40	–	CC3L3-4001

Instrument Transformers
Comparison table between new and old types of low-pressure V/CT

■ Double mode type of low-pressure transformer with primary winding 1150 V 1.0 class

Applicable model			
Ratings		Old product Type	New product Type
Secondary current 5A	5/5A, 10/5A	CC1S1	CC3P1-□□□5
	15/5A, 20/5A, 30/5A		CC3P1-□□□5
	40/5A, 50/5A		CC3P1-□□□5
Secondary current 1A	5/1A, 10/1A		CC3P1-□□□1
	15/1A, 20/1A, 30/1A		CC3P1-□□□1
	40/5A, 50/1A		CC3P1-□□□1
Secondary current 5A	5/5A, 10/5A	CC1S2	CC3P2-□□□5
	15/5A,20/5A, 30/5A		CC3P2-□□□5
	40/5A, 50/5A		CC3P2-□□□5
Secondary current 1A	5/1A, 10/1A		CC3P2-□□□1
	15/1A, 20/1A, 30/1A		CC3P2-□□□1
	40/1A, 50/1A		CC3P2-□□□1
Secondary current 5A	5/5A, 10/5A, 15/5A, 20/5A, 30/5A	–	CC3P3-□□□5
	40/5A, 50/5A		CC3P3-□□□5
Secondary current 1A	5/1A, 10/1A, 15/1A, 20/1A, 30/1A		CC3P3-□□□1
	40/1A, 50/1A		CC3P3-□□□1

■ Double mode type of square window through type low-pressure transformer 1150 V 1.0 class

Applicable model			
Ratings		Old product Type	New product Type
Secondary current 5A	150/5A	–	CC3M2-1505
	200/5A	FRS15-42	CC3M2-2005
	250/5A		CC3M2-2505
	300/5A		CC3M2-3005
	400/5A	FRS15-52	CC3M2-4005
	500/5A		CC3M2-5005
	600/5A		CC3M2-6005
	750/5A	FRS15-80	CC3M2-7505
Secondary current 5A	200/5A	FRS40-42	CC3M3-2005
	250/5A		CC3M3-2505
	300/5A		CC3M3-3005
	400/5A	FRS40-52	CC3M3-4005
	500/5A		CC3M3-5005
	600/5A		CC3M3-6005
	750/5A	FRS40-80	CC3M3-7505
	800/5A		CC3M3-8005
	1000/5A		CC3M3-10X5
	1200/5A	FRS40-105	CC3M3-12X5
	1500/5A		CC3M3-15X5
	2000/5A		CC3M3-20X5
	2500/5A	FRS40-160	CC3M3-25X5
	3000/5A		CC3M3-30X5
	4000/5A	FRS40-180	CC3M3-40X5
Secondary current 5A	5000/5A * Epoxy resin mold	–	CC3M3-50X5
	6000/5A * Epoxy resin mold	–	CC3M3-60X5

Comparison table between new and old types of low-pressure V/CT

■ Direct mounting bracket of bus bar of square window through low-pressure transformer

Applicable model			
Ratings		Old product Type	New product Type
Bus bar	For 200 to 300A For 300 to 500A	–	Bus bar mounting bracket CC3M2 (for 200～300A) CC3M3 (for 300 to 500A)
	For 400 to 750A	–	Bus bar mounting bracket CC3M2 (for 400～750A)
	For 600 to 800A	–	Bus bar mounting bracket CC3M3 (for 600～800A)
	For mounting of one bus bar 1000 to 2000A	–	Bus bar mounting bracket CC3M3 (for mounting 1 piece of 10X to 20X)
	For mounting of two bus bars 1000 to 2000A	–	Bus bar mounting bracket CC3M3 (for mounting 2 pieces of 10X to 20X)
	For 2500 to 3000A	–	Bus bar mounting bracket CC3M3 (for 25X～30X)

■ Double mold type of potential transformer (simple ratio)

Applicable model		
Ratings	Old product Type	New product Type
220/110V 1.0 class With current limiting fuse	–	CD32F-21
440/110V 1.0 class With current limiting fuse		CD32F-41
220/110V 1.0 class Without current limiting fuse	FPRE-1BNa	CD32N-21
440/110V 1.0 class Without current limiting fuse		CD32N-41
220/110V 3.0 class With current limiting fuse	–	CD34F-21
440/110V 3.0 class With current limiting fuse		CD34F-41
220/110V 3.0 class Without current limiting fuse	FPRE-1CNa	CD34N-21
440/110V 3.0 class Without current limiting fuse		CD34N-41
220/110V 1.0 class With current limiting fuse	–	CD36F-21
440/110V 1.0 class With current limiting fuse		CD36F-41
220/110V 1.0 class Without current limiting fuse	FPRE-1DNa	CD36N-21
440/110V 1.0 class Without current limiting fuse		CD36N-41

■ Split type transformer

Applicable model			
Ratings		Old product Type	New product Type
Split type transformer (for F-MPC)	5A/7.34mA	CC2A81	CC2D81
Split type transformer (for F-MPC)	400A/133.33mA	CC2C54	CC2D54
Split type transformer (for F-MPC)	200A/66.67mA	CC2C65	CC2D65
Split type transformer (for general instruments)	100/1A, 200/1A	CC2N72	CC2D74
Split type transformer (for general instruments)	400/1A	CC2N73	CC2D74
Split type transformer (for general instruments)	500/5A	CC2N73	–
Split type transformer (for general instruments)	100/1A, 200/1A, 400/1A	CC2C74	CC2D74

Power Factor Controllers
Automatic power factor regulators QC06E and QC12E

Automatic power factor regulator QC06E, QC12E

■ Description

Automatic power factor regulator (APFR) is a device which is designed to maintain the target power factor by regulating lagging or leading current. The APFR is designed to monitor the reactive power within the circuit continuously and to provide ON/OFF signals automatically to control circuit breakers in a capacitor bank. In an electrical network such as an industrial plant using induction motors which produce reactive power, the power factor will drop. This will cause a power loss, a line voltage drop and other disadvantages. In conventional electrical systems the efficiency of transmission and distribution equipment is improved by installing fixed capacitors across the line. However, an over-compensation may arise when there is a light load, such as at night, which would result in an increase in line voltage and excess current. The APFR supervises the power factor in the system, and controls the power factors by switching capacitors ON or OFF as the situation requires in the face of a reactive leading or lagging load.

Low power loss
Correcting the power factor with a power capacitor reduces the line current. This also reduces the power loss caused by the resistances of the power cables and transformer windings.

Effective use of power receiving facility
Correcting the power factor with a power capacitor reduces the line current. Since this produces margins in the transformer capacity and the current-carrying capacity of cables, a heavier load can be carried without adding more facilities.

Stable supply voltage for long equipment service life
A reactive power, especially a leading reactive power at a light load (at night), often produces an overvoltage and shortens the service life of lamps. Use an automatic power factor regulator to suppress a voltage decrease at a heavy load and a voltage increase at a light load.

Laborsaving unmanned operations
This regulator outputs capacitor connection and disconnection commands automatically to maintain an optimum power factor. The simple setup for this output saves labor applied to power factor correction.

■ Features

• Compact (DIN size) and lightweight
The DIN-size compact unit permits easy mounting hole on the panel and enhances work efficiency.
The 6-bank and 12-bank models have front panels of the same size (144mm × 144mm). Since in the panel cutout hole sizes are also the same (138mm × 138mm), it is possible to use panel cutout holes of one uniform size.

QC06E

• 220V and 440V power supplies
The regulator can be connected to a 220V or 440V power supply. Set the voltage input switch on the front panel to the control power supply voltage being used.
Connect control power cables to the correct terminals of the terminal block in accordance with the control power supply voltage being used.

• Automatic setting of control level by microcomputer
The mode and data are set simply by using four keys.
The microcomputer automatically sets the levels at which capacitors should be connected or disconnected.

• Three types of capacitor connection and disconnection control by purpose

1. Cyclic control or optimum control (automatic selection)
Under cyclic control, capacitors of the same capacitance are connected and disconnected in ascending order of capacitor number.
Under optimum control to keep the number of connections and disconnections minimal, a capacitance change is calculated from the measured reactive power and the target power factor and a capacitor of the nearest capacitance is connected or disconnected.
Either control is selected in accordance with the set capacitor capacitance.

2. Unconditional cyclic control
Capacitors are controlled cyclically, irrespective of their capacitances.

3. Multistep control
Capacitors having capacitances incremented in multiples of two (e.g. 1:2:2:2:2:2:, 1:2:4:4:4:4, and 1:2:4:8:8:8) are simultaneously connected or disconnected to optimize the capacitance with a minimal number of steps.

• Useful functions

1. Polarity error diagnosis function

If a polarity error in wiring is detected, the regulator lights the alarm lamp and sounds the buzzer to indicate the miswiring.

2. Forced disconnection function

To protect capacitors from being damaged or reactors from being burnt by excessive harmonics, or to disconnect capacitors unconditionally at night, external time switch signals can be input to the regulator. The signals automatically disconnect the connected capacitors in proper order.

• Automatic capacitor disconnection at light load

When the load of a power line decreases at night, the connected capacitors may increase the leading reactive power and cause an overvoltage.
A voltage increase on the power receiving side will shorten the service life of lamps and other load equipment.
To prevent an excessive leading power factor at a light load, the regulator automatically disconnects capacitors.

QC06E

• Abundant regulator status information display

Power factor

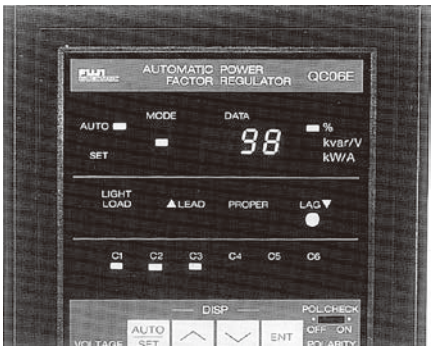

Reactive power

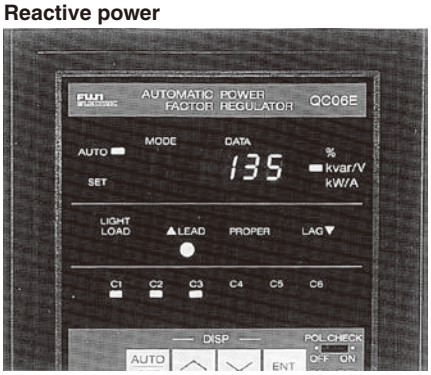

Active power

Voltage

Current

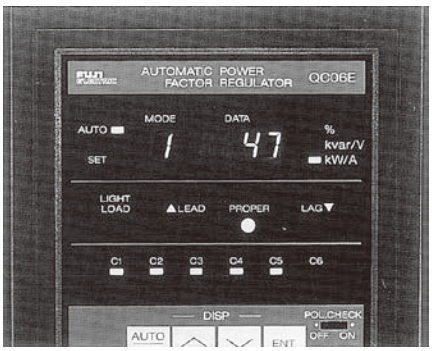

Power Factor Controllers
Automatic power factor regulators QC06E and QC12E

■ Specifications

Item		Specification	
		QC06E	**QC12E**
Voltage input	Frequency	50/60Hz	
	Rated voltage	200 – 220V/400 – 440V selectable	
	Allowable voltage fluctuation range	170 – 264V at 220V 323 – 528V at 440V	
	Power consumption	13VA at 220V, 13VA at 440V	15VA at 220V, 15VA at 440V
Current input	Frequency	50/60Hz	
	Rated current	5A	
	Power consumption	1VA	
Reactive power control range	Connection control level (kvar)	Automatic setting in accordance with the target power factor	
	Disconnection control level(kvar)	Already-connected minimum capacitor capacitance ×1.2 – connection control level (When the calculation result becomes negative, the disconnection control level is automatically set to 0).	
	Correct control range (kvar)	Already-connected minimum capacitor capacitance ×1.2 (Automatic setting)	
	Control error	±0.05 (kvar) ×CT ratio (at 220V input)	
Light-load disconnection control value		When the active power level falls below the numeric-input minimum load, the capacitor are disconnected successively from the capacitor banks in descending order of capacitance at disconnecting time intervals. When the minimum load is set to 0, however, no capacitors are disconnected even when the active power level falls below the numeric-input minimum load. [Control error: ±0.05 (kvar) × CT ratio] (at 220V input)	
Capacitor control output	No. of connectable banks	6-circuit (NO contact common on one side)	12-circuit (NO contact common on one side)
	Applicable minimum load	1V DC, 1mA	
	On/Off switching capacity	250V AC, 5A 30V DC, 5A 100V DC, 0.5A	
	Electrical life expectancy	Approx. 100.000 operations at 220V AC, 2A inductive load	
Output control system		A1: Cyclic/optimum control, selectable automatically A2: Uncondentional cyclic control A3: Multistep control, 1:2:2:2:2:2------ A4: Multistep control, 1:2:4:4:4:4------ A5: Multistep control, 1:2:4:8:8:8------ (Control modes A3 to A5 are effective for C1 only 0 to 9999)	
Setting item		1. Bank capacitor capacitance C1 to C6 (0kvar *) (Modes 1 to 6) Output control system A3 to A5 are available only for bank C1.	Bank capacitor capacitance C1 to C12 (0kvar *) (Modes 1 to 9, o, b, c) Output control system A3 to A5 are available only for bank C1.
		2. Target power factor cosθ = 98%*	Mode F (85 to 100)
		3. CT ratio 0*	Mode C (1 to 1200)
		4. Control mode 1*	Mode A (1 to 5)
		5. Minimum load 0kW*	Mode L (0 to 9999)
		6. Delay time 300 sec.*	Mode d (30, 60, 120, 300, 600)
Display	Digital display	Current power factor (%), reactive power (kvar) (no mode symbol: leading, –: lagging), active power (kW), primary voltage (V) and primary current (A) on 7-segment LED panel.	
	Display error: 0.5A or less at CT input Power factor lead (+60%) to lag (–60%)	Power factor: ±5% or less, Reactive/active power: ±0.05kvar/kW × CT ratio or less (at 220V input) Primary current: ±0.1A × CT ratio or less	
	Control status display (LED)	Light load: Active power equal to or lower than the light-load disconnection control level Lagging, leading, optimum: Reactive power lagging, leading, or optimum in the control range	
	Control output display (LED)	Lit: Control output ON, Unlit: Control output OFF	
Operating ambient temperature		–10 to +55°C	
Dielectric strength		2500V AC 1 minute (between all terminals and E terminal)	
Outline dimensions (mm)		Height: 144, Width: 144, Depth: 114.5	Height: 144, Width: 144, Depth: 140
Mass (kg)		Approx. 1.5	Approx. 1.8

Note: * Value at shipment

■ Display and setting panel

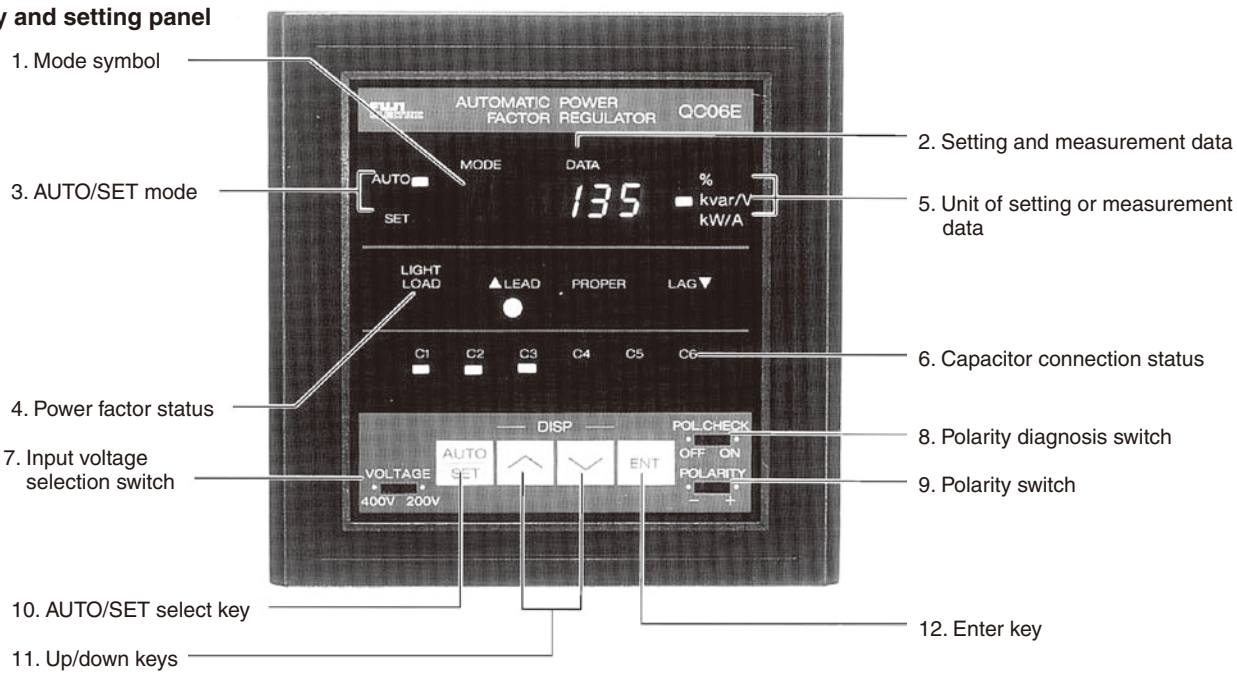

1. Mode symbol
Displays the set mode (mode symbol) or the kind of measurement data.

2. Setting and measurement data
• Data setting mode
The digital LED display displays the following setting data:

Mode symbol	Setting item	Setting data	Setup at shipment
1 to 9	Capacitance of capacitor C1 to C9 *6	0 to 9999kvar *1	0
o, b, c	Capacitance of capacitor C10, C11, C12 *6	0 to 9999kvar *1	0
A	Capacitor control system	1 to 5 *2	1
C	CT ratio	1 to 1200 *3	0
F	Target power factor	85 to 100%	98
L	Disconnection at light load	0 to 9999kW *4	0
d	Delay time	30, 60, 120, 300, or 600s *5	300

Notes:
*1 When the capacitance is set to 0 or 9999, the control output contact goes ON for 0 or OFF for 9999 during automatic operation.

*2 See the table at right for the meanings of the capacitor control system numbers.

*3 The CT ratio is set to 0 when the regulator is shipped from the factory. Set this value to accommodate the use requirements. The regulator does not operate automatically when the set value is 0 or 1201 or greater.

*4 When the set value is 0, the light-load disconnection function is not activated. To disconnect capacitors when the load becomes light, set the minimum capacitor capacitance.

*5 Select an optimum delay time for the capacitor discharging unit. (Set “300” or “600” if a discharging resistor is used.)

*6 The mode symbols are 1 to 6 (C1 to C6) for type QC06E and 1 to 9, o, b, and c (C1 to C12) for type QC12E.

• Auto operation mode
When the Up (∧) and Down (∨) keys are pressed at the same time, the LED display displays measurement data in the following order:

Model symbol	Display item	Measurement data display
(–) *7	Power factor	–0 to 100 to 0%
(–) *7	Reactive power	–9999 to 0 to 9999kvar *8
A	Active power	0 to 9999kW *8
U	Primary voltage	0 to 9999V *8
I	Primary current	0 to 6000 (5X1200)A
	No display	—

Notes:
*7 No mode symbol is displayed for a lead; a negative sign (–) is displayed for a lag.

*8 The LED display always displays “9999” for any value greater than 9999.

Capacitor control system

Set value	Description
1	Cyclic/optimum control
2	Unconditional cyclic control
3	Multistep control (capacitance ratio: 1:2:2:2:2:2:2:2:2:2:2)
4	Multistep control (capacitance ratio: 1:2:4:4:4:4:4:4:4:4:4)
5	Multistep control (capacitance ratio: 1:2:4:8:8:8:8:8:8:8:8)

Power Factor Controllers
Automatic power factor regulators QC06E and QC12E

3. AUTO/SET mode
The green lamp lights in the auto operation mode and the red one in the data setting mode.

4. Power factor status
Light load: The yellow lamp lights when the active power of the circuit is equal to or lower than the set level for light-load disconnection.
△ Lead:
The red lamp lights when the reactive power of the circuit is leading, compared to the set level for disconnection.
Acceptable:
The green lamp lights when the reactive power of the circuit is within the optimum control range.
Lag ▽ :
The red lamp lights when the reactive power of the circuit is lagging, compared to the set level for connection.

5. Unit of setting or measurement data
A green lamp lights at %, kvar, kW, V, or A.

6. Capacitor connection status
The red lamps light at the capacitors for which the capacitor control output contacts are ON (make) and go out at the capacitors for which the contacts are OFF (break).

7. Input voltage selection switch
Set this switch to “200V” for 200/220V input power or “400” for 400/440V input power.

8. Polarity diagnosis switch
The polarity switch must initially be toggled to “+”. Toggle the polarity diagnosis switch to the right to check the voltage or current input polarity. If the polarity is incorrect, “E□□□3” is displayed and the buzzer sounds.

9. Polarity switch
If the voltage or current input polarity is incorrect, toggle this switch to “–” and press the enter key to clear the error display and stop the buzzer. The regulator then operates normally because the input polarity is handled as being reversed.

10. AUTO/SET select key
Press this key to select the auto operation or data setting mode.

11. Up/down keys
Use these keys to select a data setting mode.
Use these keys to increment (+1) or decrement (–1) a numeric value in each setting mode.

12. Enter key
After selecting a data setting mode, start numeric input.
The numeric display changes from being continuously lit to blinking.
Press this key to confirm a set value in each data setting mode. The value is stored in the internal memory and the numeric display changes from blinking to being continuously lit.

Press two keys of the four keys, (AUTO SET ∨ ∧ and ENT), at the same time for the following operation or display:

● **Data setting mode**

∧ ∨

Clears the set value to 0. (This key operation is effective only when the mode symbol is 1 to 9, o, b, c, C, or L and the numeric display is blinking.)

∧ ∨

Resets the set value to the shipping setup. (This key operation is effective only when the mode symbol is 1 to 9, o, b, c, C, or L and the numeric display is blinking.)
(Keep the keys depressed for five seconds or longer.)

● **Auto operation mode**

∧ ∨

Changes the measurement data display. (Each time the keys are pressed, the display changes in the following order: power factor, reactive power, active power, primary voltage, primary current, and no display. The initial display at power-on is always power factor data.

∧ ENT

Tests a capacitor connection. (Press the keys at the same time for reactive power lag display. Keep the keys depressed to connect the capacitors in the specified order.)

∨ ENT

Tests a capacitor disconnection. (Press the keys at the same time for reactive power lead display. Keep the keys depressed to disconnect the capacitors in the specified order.)

■ Type number nomenclature and ordering code

JD006 – E

Series
E: E series

No. of connectable banks
JD006: QC06, 6 circuits
JD012: QC12, 12 circuits

■ Ordering information

Specify the following:
1. Type number or ordering code
2. Input voltage and current
3. Operating voltage
4. Number of connectable capactor banks

■ Operation of automatic power factor regulator

• Cyclic control
Under cyclic control/optimum control, the regulator connects and disconnects capacitors of the same capacitance cyclically.
Under unconditional cyclic control, the regulator connects and disconnects capacitors of different capacitances cyclically, irrespective of the set capacitance.

1. Capacitor connection
When the reactive power exceeds the level at which more capacitors should be connected, the red lag lamp lights. If the red lamp remains lit for the set delay time or longer, the corresponding capacitor control output goes ON and the red lamp for the capacitor bank lights.
When the reactive power of the circuit is still over the connection control level and the red lag lamp remains lit, the capacitor control output for the next capacitor goes ON after the delay time. The capacitor control outputs go ON one by one at the delay time intervals until the reactive power level of the circuit falls within the allowable range.

2. Capacitor disconnection
The red lead lamp lights when the circuit load decreases and the connected capacitors increase the leading reactive power of the circuit beyond the level at which a capacitor should be disconnected. When the red lead lamp remains lit for the set delay time or longer, the corresponding capacitor control output goes OFF and the red lamp for the capacitor bank goes OFF.
The capacitors are disconnected in the order of their connection.
The capacitor control output for each capacitor is turned OFF at every delay time interval until the reactive power level falls within the allowable range.

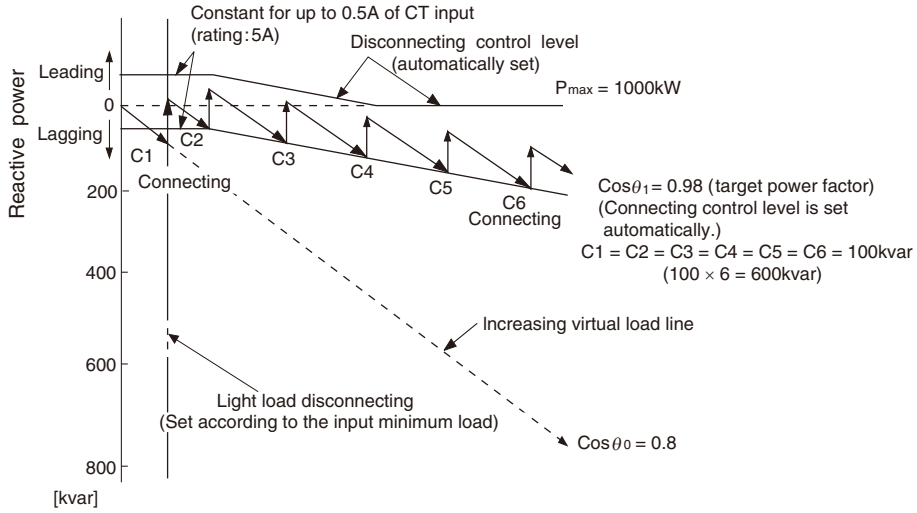

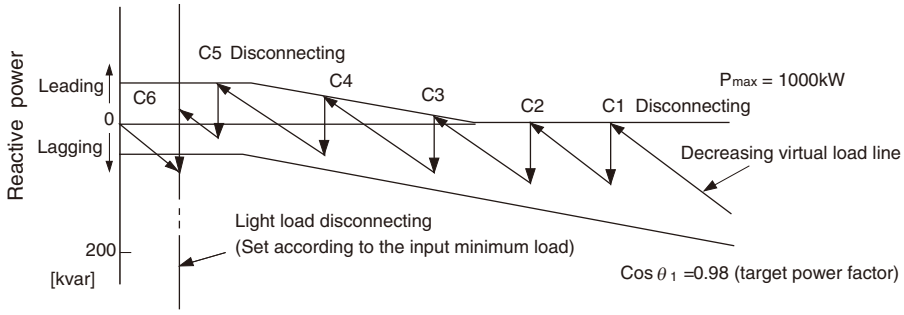

Output operation by the connecting or disconnecting control signals for capacitors

Leading △								○	○	○	○				○		○	○		○	
Acceptable	○																				
Lagging ▽		○	○	○	○	○	○					○	○	○		○			○		○
C1		○ ON						OFF				○ ON						OFF			
C2			○ ON	○	○	○	○	○	OFF				○ ON	○	○	○	○	○	○	OFF	
C3				○ ON	○	○	○	○	○	OFF				○ ON	○	○	○	○	○	○	○
C4					○ ON	○	○	○	○	○	OFF					○ ON	○	○	○	○	○
C5						○ ON	○	○	○	○	○	○	○	○	OFF				○ ON	○	○
C6							○ ON	○	○	○	○	○	○	○	○	○	OFF				○ ON

○ : Shows that indicators are lit.

Power Factor Controllers
Automatic power factor regulators QC06E and QC12E

• Optimum control
Under optimum control, the regulator connects or disconnects the capacitor with the capacitance closest to the change of reactive power among capacitors of different capacitances. If there are two or more capacitors of the same capacitance, the regulator connects or disconnects the capacitors cyclically for optimum control (the number of switchings) match.

1. Capacitor connection
The red lag lamp lights when the reactive power level exceeds the level at which more capacitors should be connected. The regulator calculates the difference between the current reactive power and the level at which more capacitors should be connected, and integrates the calculated value for the set delay time. The average value per unit time is calculated from the integrated total and a capacitor having the capacitance closest to the average value is selected. The capacitor control output for the capacitor is turned ON and the red lamp of the capacitor bank lights.
The regulator continues integrating and averaging the differences between the current reactive power level and the level at which more capacitors should be connected, and selecting optimum capacitors. The capacitor control output is turned ON repeatedly until the reactive power of the circuit falls within the allowable range.

Figure 1 shows an example of a capacitor connection control with a load variation pattern.

2. Capacitor disconnection
When the circuit load decreases, the already-connected capacitors increase the leading reactive power level. If the reactive power level exceeds the level at which capacitors should be disconnected, the red lead lamp lights. The regulator calculates the difference between the current reactive power level and the level at which capacitors should be disconnected, and integrates the calculated value for the set delay time. The average value per unit time is calculated from the integrated total and a capacitor having the capacitance closest to the average value is selected. The capacitor control output for the capacitor is turned OFF and the red lamp of the capacitor bank goes OFF.

The regulator continues integrating and averaging the differences between the current reactive power level and the level at which capacitors should be disconnected, and selecting optimum capacitors. The capacitor control output is turned OFF repeatedly until the reactive power level of the circuit falls within the allowable range.
Figure 2 shows an example of capacitor disconnection control with a load variation pattern.

Fig. 1

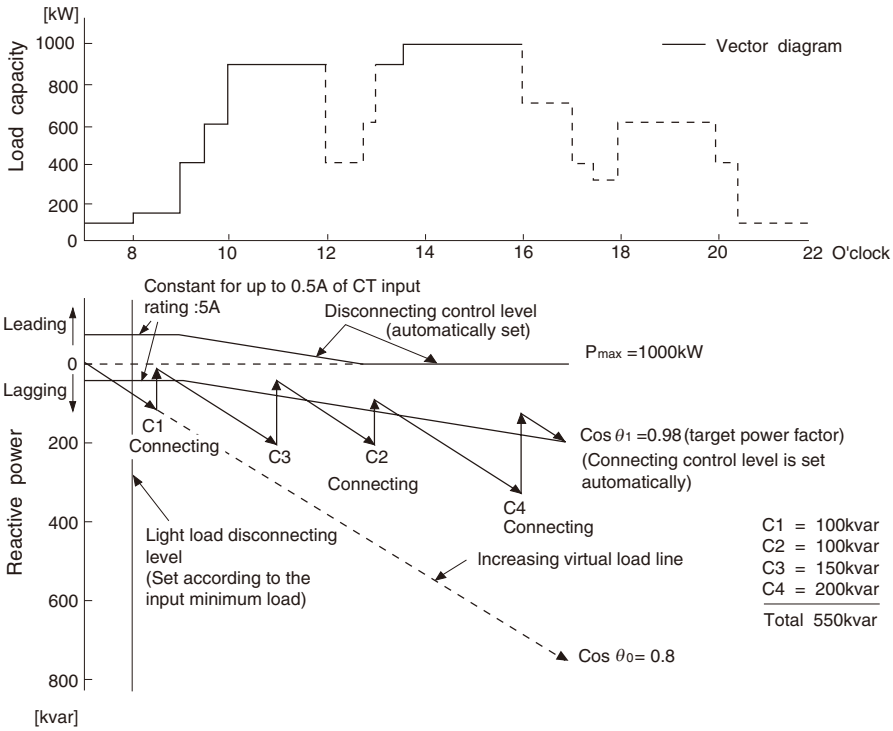

Fig. 2

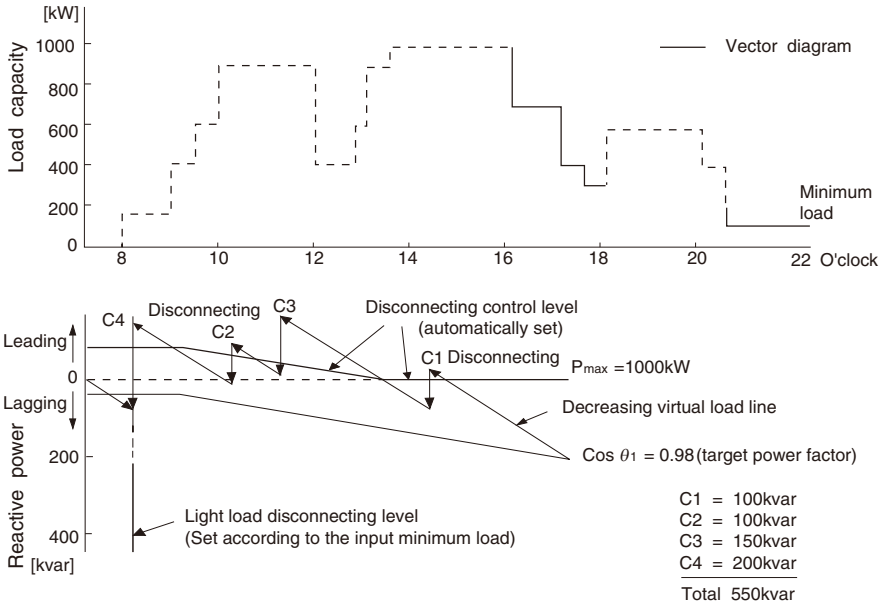

• Multistep control (step-by-step control)
Under multistep control, the regulator connects or disconnects in units of the minimum capacitance set at C1 in accordance with the changes of the reactive power to approximate the power factor to the target value.
The power factor at a light load can be controlled in the same way.

1. Capacitor connection
When the reactive power level exceeds the level at which more capacitors should be connected, the red lag lamp lights. If the red lamp remains lit for the set delay time or longer, the capacitor control outputs for the next step go ON or OFF and the red lamps of the capacitors light or go OFF. If the reactive power level of the circuit is still over the level at which more capacitors should be connected and the red lag lamp remains lit, the capacitor control outputs for the next capacitor go ON or OFF after the set delay time.
The capacitor control output is turned ON or OFF sequentially at the delay time intervals until the reactive power level of the circuit falls within the allowable range.

2. Capacitor disconnection
The red lead lamp lights when the load decreases and the connected capacitors increase the leading reactive power level of the circuit beyond the level at which capacitors should be disconnected. When the red lamp remains lit for the set delay time or longer, the capacitor control outputs for the next step go OFF or ON and the red lamps of the capacitor banks go OFF or light.
The capacitor control output is turned OFF or ON sequentially at the delay time intervals until the reactive power level of the circuit falls within the allowable range.

Capacitor connection and disconnection signal output operation
Signal output in multistep control mode/QC06E

Example 1

Lag/Lead	Step	C1=10kvar C2=20kvar C3=20kvar C4=20kvar C5=20kvar C6=20kvar Control system [3] Capacitance ratio C1:C2:C3:C4:C5:C6=1:2:2:2:2:2							Lag/Lead	C1=10kvar C2=20kvar C3=20kvar C4=20kvar C5=20kvar C6=20kvar Control system [3] Capacitance ratio C1:C2:C3:C4:C5:C6=1:2:2:2:2:2						
		C1	C2	C3	C4	C5	C6	Total capacitance		C1	C2	C3	C4	C5	C6	Total capacitance
Lag▽	1	○						10kvar	Lead△	○	○	○	○	○	○	110kvar
	2		○					20			○	○	○	○	○	100
	3	○	○					30		○		○	○	○	○	90
	4		○	○				40				○	○	○	○	80
	5	○	○	○				50		○			○	○	○	70
	6		○	○	○			60					○	○	○	60
	7	○	○	○	○			70		○				○	○	50
	8		○	○	○	○		80						○	○	40
	9	○	○	○	○	○		90		○					○	30
	10		○	○	○	○	○	100							○	20
	11	○	○	○	○	○	○	110		○						10

Example 2

Lag/Lead	Step	C1=10kvar C2=20kvar C3=40kvar C4=40kvar C5=40kvar C6=40kvar Control system [4] Capacitance ratio C1:C2:C3:C4:C5:C6=1:2:4:4:4:4							Lag/Lead	C1=10kvar C2=20kvar C3=40kvar C4=40kvar C5=40kvar C6=40kvar Control system [4] Capacitance ratio C1:C2:C3:C4:C5:C6=1:2:4:4:4:4						
		C1	C2	C3	C4	C5	C6	Total capacitance		C1	C2	C3	C4	C5	C6	Total capacitance
Lag▽	1	○						10kvar	Lead△	○	○	○	○	○	○	190kvar
	2		○					20			○	○	○	○	○	180
	3	○	○					30		○		○	○	○	○	170
	4			○				40				○	○	○	○	160
	5	○		○				50		○	○		○	○	○	150
	6		○	○				60			○		○	○	○	140
	7	○	○	○				70		○			○	○	○	130
	8			○	○			80					○	○	○	120
	9	○		○	○			90		○	○			○	○	110
	10		○	○	○			100			○			○	○	100
	11	○	○	○	○			110		○				○	○	90
	12			○	○	○		120						○	○	80
	13	○		○	○	○		130		○	○				○	70
	14		○	○	○	○		140			○				○	60
	15	○	○	○	○	○		150		○					○	50
	16			○	○	○	○	160							○	40
	17	○		○	○	○	○	170		○	○					30
	18		○	○	○	○	○	180			○					20
	19	○	○	○	○	○	○	190		○						10

Power Factor Controllers
Automatic power factor regulators QC06E and QC12E

Example 3

Lag/Lead	Step	C1=10kvar C2=20kvar C3=40kvar C4=80kvar C5=80kvar C6=80kvar Control system [5] Capacitance ratio C1:C2:C3:C4:C5:C6=1:2:4:8:8:8							Lag/Lead	C1=10kvar C2=20kvar C3=40kvar C4=80kvar C5=80kvar C6=80kvar Control system [5] Capacitance ratio C1:C2:C3:C4:C5:C6=1:2:4:8:8:8						
		C1	C2	C3	C4	C5	C6	Total capacitance		C1	C2	C3	C4	C5	C6	Total capacitance
Lag▽	1	○						10kvar	Lead△	○	○	○	○	○	○	310kvar
	2		○					20			○	○	○	○	○	300
	3	○	○					30		○		○	○	○	○	290
	4			○				40				○	○	○	○	280
	5	○		○				50		○	○		○	○	○	270
	6		○	○				60			○		○	○	○	260
	7	○	○	○				70		○			○	○	○	250
	8				○			80					○	○	○	240
	9	○			○			90		○	○	○		○	○	230
	10		○		○			100			○	○		○	○	220
	11	○	○		○			110		○		○		○	○	210
	12			○	○			120				○		○	○	200
	13	○		○	○			130		○	○			○	○	190
	14		○	○	○			140			○			○	○	180
	15	○	○	○	○			150		○				○	○	170
	16				○	○		160						○	○	160
	17	○			○	○		170		○	○	○			○	150
	18		○		○	○		180			○	○			○	140
	19	○	○		○	○		190		○		○			○	130
	20			○	○	○		200				○			○	120
	21	○		○	○	○		210		○	○				○	110
	22		○	○	○	○		220			○				○	100
	23	○	○	○	○	○		230		○					○	90
	24				○	○	○	240							○	80
	25	○			○	○	○	250		○	○	○				70
	26		○		○	○	○	260			○	○				60
	27	○	○		○	○	○	270		○		○				50
	28			○	○	○	○	280				○				40
	29	○		○	○	○	○	290		○	○					30
	30		○	○	○	○	○	300			○					20
	31	○	○	○	○	○	○	310		○						10

■ Terminals

Used for	Terminal symbol	Terminal name	Description
Input	P2 (at 220V) P3	Voltage input (220V)	Connect this terminal directly to a 220V power line. Note: The current for the internal control power supply flows between terminal P2 and P3.
	P2 (at 440V) P3	Voltage input (440V)	Connect this terminal directly to a 440V power line. Note: The current for the internal control power supply flows between terminal P2 and P3.
	1S, 1L	Current input	Connect these terminals to the secondary side of a CT.
	E	Ground	Grounding resistance: 100Ω or less
Contact output	COM	Capacitor control output common	Connect the common cable for capacitor connection and disconnection signals. Be sure to connect the upper and middle COM terminals (QC12E)
	C 1 to C12	Control output terminal for C 1 to C12	This terminal output control signals to the capacitor control section (Ex. VMC*1) connected to the terminal.
External forced disconnection signal input *2	OFF +	Forced disconnection signal input (positive)	Connect this terminal to one side of a contact for a contact signal input. Connect this terminal to a collector for NPN transistor open-collector signal input.
	OFF –	Forced disconnection signal input (negative)	Connect this terminal to opposing side of a contact for a contact signal input. Connect this terminal to 0V for NPN transistor open-collector signal input.

Notes:
*1 VMC: Vacuum magnetic contactor
*2 Signal input circuits
ON voltage VL < 1. 0V
Drain current Io = Approx. 10mA

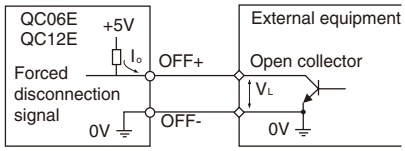

QC06E and QC12E

Upper terminal arrangement

Main circuit

C6	C5	C4	C3	C2	C1	COM	OFF–	OFF+

Lower terminal arrangement

Control circuit

* NC	* NC	1S	1L	* NC	P3	P2 (220V)	P2 (440V)	E

*NC: No connection

QC12E only

Middle terminal arrangement

Main circuit

C12	C11	C10	C9	C8	C7	COM

Note: For QC12E, the upper and middle COM terminals are not connected internally. Be sure to connect these terminals.

Power Factor Controllers
Automatic power factor regulators QC06E and QC12E

■ Dimensions, mm

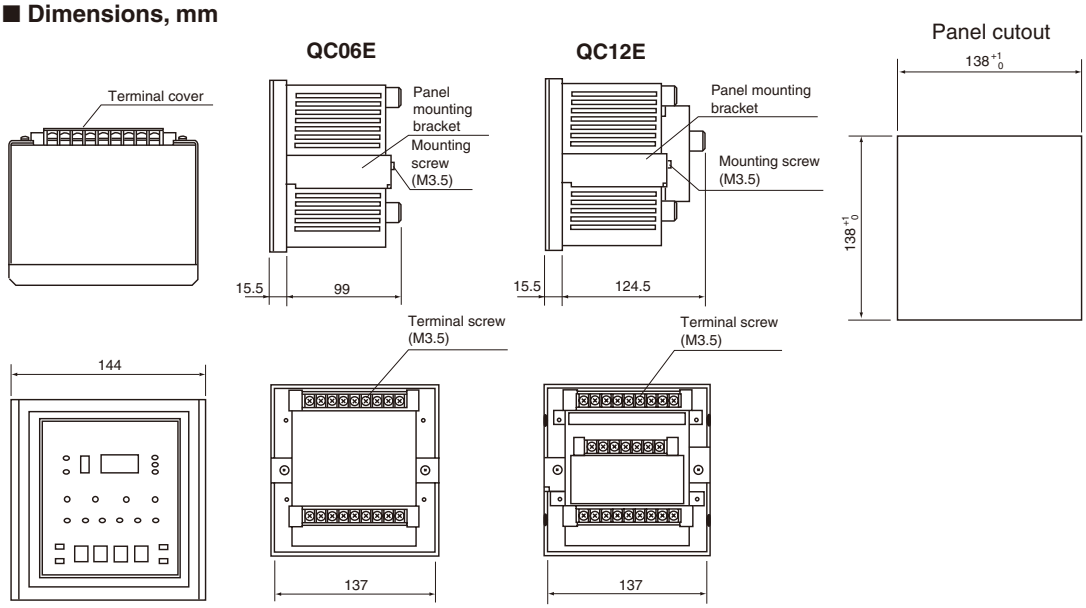

■ Key operations

● Data setting mode

Operation	Key operation	Remarks
Selecting a setting item	∧ or ∨	
Setting a value	∧ ∨ ENT	
Incrementing the data value (+1)	∧	Control mode (Mode A): 1 to 5 Target power factor (Mode F): 85 to 100 Delay time (Mode d): 30, 60, 120, 300, or 600 For other modes, be sure to enter a four-digit numeric value. The input order is thousands, hundreds, tens, then ones. Change the set value if a high-order digit is not required, skip the digit by pressing the ENT key, then enter a numeric value (1 to 9) to the next digit. (The skipped digit is not displayed.)
Decrementing the data value (–1)	∨	
Shifting the digit up	ENT	
Enter capacitance 0 value	ENT	When the value “0” is blinking, press the ENT key four times to set the value.
Determining the set value	ENT	
Clearing the set value to 0	∧ or ∨ Press at the same time.	This key operation is effective only when the mode symbol is 1 to 9, o, b, c, C, or L and numeric display is blinking.
Resetting all set value	∧ or ∨ Press for five seconds or longer at the same time.	This key operation is effective only when the mode symbol is 1 to 9, o, b, c, C, or L and numeric display is blinking. (All the set items are reset to the shipping setup.)
Stopping the buzzer giving error notification during diagnosis	AUTO SET ∧ ∨ ENT	Any key may be pressed.
Changing mode to auto operation	AUTO SET	

● Auto operation mode

Operation	Key operation	Remarks
Changing measurement display	∧ or ∨ Press at the same time.	The measurement data display changes cyclically in the following order: Power factor, reactive power, active power, primary voltage, primary current, and no display. The initial display at power-on is power factor data.
Testing capacitor connection	∧ + ENT Press continually at the same time.	For the operation sequence, operation time, and other details, refer to the instruction manual.
Testing capacitor disconnection	∨ + ENT Press continually at the same time.	
Stopping the buzzer giving error notification during diagnosis	AUTO SET ∧ ∨ ENT	Any key may be pressed.
Changing mode to data setting	AUTO SET	

■ **Data setting procedure**

• **Set the following items**

1. Capacitor capacitance: Capacitor 1 (150kvar) to 3 (150kvar)
2. Capacitor control mode (example): 2
3. CT ratio (example): 20 (current transformation ratio: 100/50)
4. Target power factor: 100(%)
5. Minimum load: 100(kW)
6. Delay time: 120(s)

• **Data setting and change procedure**

Data setting flow	Key operation	Display status		Explanation
		Mode	Data	
Power-on *1 Mode-1 initial value display	Press AUTO SET key to change already-input data.	1	0	"0" is set at shipping from the factory.
Capacitor-1 capacitance input awaited	1 ENT	1	0000	"0" starts blinking to wait for capacitor-1 capacitance input. An entry in the thousands place is awaited.
Enter 0 in the thousands place	2 ENT	1	0000	The display value dose not change but "0" is set at the thousand place. An entry in the hundreds place is awaited.
Enter 1 in the hundreds place	3 ∧	1	0100	Enter 1 in the hundreds place.
	4 ENT	1	0100	"1" is set at the hundreds place. An entry in the tens place is awaited.
Enter 5 in the tens place	5 Press ∧ key five times	1	0150	Enter 5 in the tens place.
Enter 0 in the ones place	6 ENT	1	150	"5" is set at the tens place. An entry in the ones place is awaited.
	7 ENT	1	0150	Capacitor-1 capacitance input has been completed.
Mode-2 initial value display	∧	2	0	"0" is set at shipping from the factory.
Capacitor-2 capacitance input awaited	ENT	2	0000	"0" starts blinking to wait for capacitor-2 capacitance input. An entry in the thousands place is awaited.
Set each place following the above order	2 to 7			Capacitor-2 capacitance input has been completed.
Mode-3 initial value display	∧	3	0	"0" is set at shipping from the factory.
Enter capacitor-3 capacitance	1 to 7			Capacitor-3 capacitance input has been completed.
Enter 0 for capacitance of capacitor 4 to 12	∧	4 – c	0	The confirmation of capacitance setup (0) has been completed.
To correct an input error or change a set value	ENT	Each mode	0000	Data can be entered in a blinking field.
Control-mode initial value display	∧	A	1	Capacitor control mode: 1 is set at shipment from the factory.
Control-mode input awaited	ENT	A	1	Capacitor control mode: An entry in the control mode is awaited.
Enter 2 in control mode	∧ or ∨	A	2	Capacitor control mode input is in progress.
	ENT	A	2	The input in capacitor control mode has been completed.
CT ratio initial display	∧	C	0	CT ratio setting mode: "0" is set at shipping from the factory.
CT ratio input awaited	ENT	C	0000	"0" starts blinking to wait for CT ratio input. An entry in the thousand place is awaited.
Enter 0 in the thousands place	ENT	C	0000	"0" is set at the thousands place. An entry in the hundreds place is awaited.
Enter 0 in the hundreds place	ENT	C	0000	"0" is set at the hundreds place. An entry in the tens place is awaited.
Enter 2 in the tens place	∧ two times	C	0020	Enter 2 in the tens place.

Note:
*1 The initial value setup in mode 1 is always displayed at the first power-on after the unit is delivered from the factory, or displayed if all data have been reset to the factory setup.
*2 Although 0 is set at shipping from the factory, check the setup by incrementing the capacitor numbers with this key.

Power Factor Controllers
Automatic power factor regulators QC06E and QC12E

Data setting flow	Key operation	Display status		Explanation
		Mode	Data	
Enter 0 in the ones place	ENT	C	0020	"2" is set at the tens place. An entry in the ones place is awaited.
	ENT	C	0020	CT ratio input has been completed.
Target power factor initial display	∧	F	98	Target power factor: "98" is set at shipping from the factory.
Target power factor input awaited	ENT	F	98	An entry of target power factor is awaited.
Enter target power factor "100"	∧ or ∨	F	100	Target power factor input is in progress.
	ENT	F	100	Target power factor input has been completed.
Minimum load initial display	∧	L	0	Minimum load: "0" is set at shipping from the factory.
Minimum load input awaited	ENT	L	0000	"0" is set at the thousands place. An entry in the thousand place is awaited.
Enter 0 in the thousands place	ENT	L	0000	"0" is set at the thousands place. An entry in the hundreds place is awaited.
Enter 1 in the hundreds place	∧	L	0100	Enter "1" in the hundreds place.
Enter 0 in the tens place	ENT	L	0100	"1" is set at the hundreds place. An entry in the tens place is awaited.
Enter 0 in the ones place	ENT	L	0100	"0" is set at the tens place. An entry in the ones place is awaited.
	ENT	L	100	Minimum load input has been completed.
Delay time initial display	∧	d	300	Delay time: "300" is set at shipping from the factory.
Delay time input awaited	ENT	d	300	An entry of delay time is awaited.
Enter delay time 120	∧ or ∨	d	120	Delay time input is in progress.
	ENT	d	120	Delay time input has been completed.
Data setting completed	AUTO SET	Display item	Measured data	Measured data is displayed.

D1

• **Supplemental explanations**

1. Mode symbols 1 to 9 and o, b, c.

- The capacitor bank is never connected when the capacitance is set to 0.
- The capacitor bank is never disconnected when the capacitance is set to 9999.
- When multistep control is selected, only the capacitance of mode symbol 1 becomes valid. No data needs to be set for mode symbols 2 to 9 and o, b, c.

2. Capacitor connection and disconnection

Mode symbol	Set value	Description
A	1	Cyclic/optimum control
	2	Uncondentional cyclic control
	3	Multistep control, capacitance ratio 1:2:2:2:2:2:2:2:2:2:2
	4	Multistep control, capacitance ratio 1:2:4:4:4:4:4:4:4:4:4
	5	Multistep control, capacitance ratio 1:2:4:8:8:8:8:8:8:8:8

A capacitor discharger recommended for multistep control of A3, A4, or A5 is a discharging coil which reduces the residual voltage of the capacitor to 50 volts or less within five seconds.

3. If “100%” is set as the target power factor of mode symbol F, a control of leading reactive power is performed.

4. Set the minimum load value to one slightly higher than the actual minimum load of the equipment to ensure an accurate light-load disconnection even when the measuring error or circuit constant fluctuates slightly.

Example: When the actual minimum load of the equipment is 100kW, set the value to 120kW (100 × 1.2).

Note:
Select a delay time suitable for the capacitor discharger. When using a discharging resistor, set the delay time to 300s (5min) or 600s (10min). An inappropriate delay time may damage capacitors or reduce their service lives.

■ Calculating CT ratios

• CT ratio

Example: When the primary current is 400A and secondary current is 5A.
400 ÷ 5 = 80 CT ratio = 80

■ Determining capacitances and number of capacitor banks to improve the power factor by switching-on capacitors

The capacitances and the number of capacitor banks are determined as follows:

• For capacitors having the same capacitances

When load variation (increase and decrease of load) is frequent.

1. Determining the target power factor

Consider how far the power factor can be improved from the current value by automatic control.

Example

Current power factor (before improvement): 0.8
Target power factor (after improvement): 0.98
Maximum demand power: 1000kW

θ: Favtor: θ
P: Active power
Q: Reactive power
S: Max. demand power
COSθ: Target power factor
COSθ0: Improve the power factor

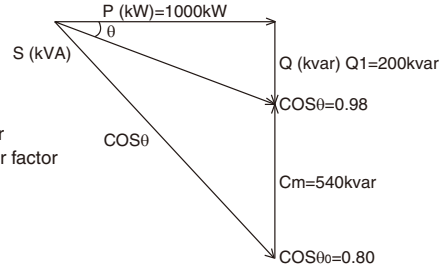

2. Calculating the capacitances needed to improve the power factor

See the capacitor selection chart (*Page D1-197*) to calculate the necessary capacitance.

Example

To improve the power factor from 0.8 to 0.98, the factor K_1 should be 0.54. Therefore, the necessary capacitance (Cm) is obtained as follows:
Cm = Maximum demand power × K_1 = 1000kW × 0.54 = 540kvar
The necessary capacitance is 540kvar.

3. Calculating the target reactive power

Calculate the target reactive power from the target power factor (after improvement) and the maximum demand power.

Example

The target value is calculated using the factor K_2 selection table. (*Page D1-197*)
Target power factor: 0.98
K_2=0.2
The target reactive power (Q_1):
Q_1 =Maximum demand power × K_2
=1000kW × 0.2
=200kvar

4. Determining the number of capacitor banks

Determine the number of capacitor banks from the necessary capacitance for power factor improvement and target reactive power.

Example

Determine the number of capacitor banks as follows:

$$n = \frac{\text{Necessary capacitance for power factor improvement (Cm)}}{\text{Target reactive power } (Q_1)}$$

(1) If n ≥ 6, the number of banks should be six.
(2) If n < 6, the number of banks should be n.
(Round up any fraction)
In this example,

$$n = \frac{540\text{kvar}}{200\text{kvar}} = 2.7 < 6$$

If the fraction is rounded up, the number of necessary banks is 3.

Note: The necessary capacitance for power factor improvement (Cm) means the total capacitance to be controlled by this unit.

5. Calculating the capacitance per capacitor bank

If each bank should have the same capacitance, the capacitance needed to improve the power factor must be divided by the number of banks calculated at step 4.

Example

Capacitance per capacitor bank:

$$Co = \frac{\text{Capacitance needed to improve the power factor (Cm)}}{\text{Number of capacitor banks (n)}}$$

In this example,

$$Co = \frac{Cm}{n} = \frac{540\text{kvar}}{3\text{ (banks)}} = 180\text{kva}$$

Since there are no 180kvar capacitors, a 200kvar-capacitor can be used.

• For capacitors having unequal-capacitances

When load variation is a slight and stable all the year round. Target power factor and the necessary capacitance for power factor improvement are calculated using step 1 and 2.

Current power factor (before improvement): 0.8
Target power factor (after inprovement): 0.98
Necessary capacitance for power factor improvement (Cm): 540kvar
For load variation as shown below, calculate the reactive power variation using K_1.

Example

- When P_1 is 150kW, $Q_1 = P_1 \times K_1 = 150 \times 0.54 = 81$kvar
  Capacitor C_1 = 100kvar
- When P_2 is 400kW, Q_2 = 216kvar
  Capacitor $C_2 = Q_2 - C_1$ = 116kvar, C_2 = 150kvar
- When P_3 is 600kW, Q_3 = 324kvar
  Capacitor $C_3 = Q_3 - (C_1 + C_2)$ = 74kvar, C_3 = 100kvar
- When P_4 is 1000kW, Q_4 = 540kvar
  Capacitor $C_4 = Q_4 - (C_1 + C_2 + C_3)$ = 190kvar, C_4 = 200kvar

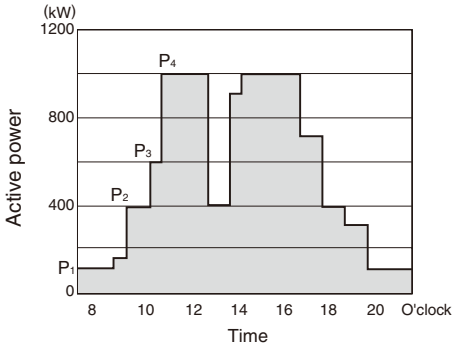

■ Capacitor selection / Factor K_1

Obtain the value of the capacitor required for improving the power factor by referring to the following list:

Power factor before being improved = cosθ_0	Power factor after being improved = cosθ_1																															
	1.00	0.99	0.98	0.97	0.96	0.95	0.94	0.93	0.92	0.91	0.9	0.875	0.85	0.825	0.8	0.775	0.75	0.725	0.7	0.675	0.65	0.625	0.6	0.575	0.55	0.525	0.5	0.475	0.45	0.425
0.4	2.30	2.16	2.10	2.05	2.01	1.97	1.94	1.90	1.87	1.84	1.82	1.75	1.68	1.61	1.55	1.49	1.42	1.35	1.28	1.21	1.13	1.05	0.96	0.88	0.78	0.68	0.57	0.45	0.32	0.17
0.425	2.13	1.98	1.92	1.88	1.84	1.80	1.76	1.73	1.70	1.67	1.64	1.57	1.51	1.44	1.38	1.31	1.24	1.18	1.11	1.04	0.96	0.88	0.79	0.71	0.61	0.51	0.40	0.27	0.15	
0.45	1.98	1.83	1.77	1.73	1.68	1.65	1.61	1.58	1.55	1.52	1.49	1.42	1.36	1.29	1.23	1.16	1.10	1.03	0.96	0.89	0.81	0.73	0.64	0.56	0.46	0.36	0.24	0.12		
0.475	1.85	1.71	1.65	1.61	1.56	1.53	1.49	1.46	1.43	1.40	1.37	1.30	1.23	1.16	1.10	1.04	0.98	0.91	0.84	0.76	0.68	0.60	0.52	0.44	0.33	0.23	0.12			
0.5	1.73	1.59	1.53	1.48	1.44	1.40	1.37	1.34	1.30	1.28	1.25	1.18	1.11	1.04	0.98	0.92	0.85	0.78	0.71	0.64	0.56	0.48	0.40	0.31	0.21	0.11				
0.525	1.62	1.48	1.42	1.37	1.33	1.29	1.26	1.22	1.19	1.17	1.14	1.07	1.00	0.93	0.87	0.81	0.74	0.67	0.60	0.53	0.45	0.37	0.29	0.20	0.10					
0.55	1.52	1.38	1.32	1.27	1.23	1.19	1.16	1.12	1.09	1.06	1.04	0.97	0.90	0.83	0.77	0.71	0.64	0.57	0.50	0.43	0.35	0.27	0.19	0.10						
0.575	1.42	1.28	1.22	1.17	1.14	1.10	1.06	1.03	0.99	0.96	0.94	0.87	0.80	0.74	0.67	0.60	0.54	0.47	0.40	0.33	0.25	0.17	0.08							
0.6	1.33	1.19	1.13	1.08	1.04	1.01	0.97	0.94	0.91	0.88	0.85	0.78	0.71	0.65	0.58	0.52	0.46	0.39	0.32	0.24	0.16	0.085								
0.625	1.25	1.11	1.05	1.90	0.96	0.92	0.89	0.85	0.82	0.79	0.77	0.70	0.63	0.56	0.50	0.44	0.37	0.30	0.23	0.16	0.08									
0.65	1.17	1.03	0.97	0.82	0.88	0.84	0.81	0.77	0.74	0.71	0.69	0.62	0.55	0.48	0.42	0.36	0.29	0.22	0.15	0.08										
0.675	1.09	0.95	0.89	0.84	0.80	0.76	0.73	0.70	0.66	0.64	0.61	0.54	0.47	0.40	0.34	0.28	0.21	0.14	0.07											
0.7	1.02	0.88	0.81	0.77	0.73	0.69	0.66	0.62	0.59	0.56	0.54	0.46	0.40	0.33	0.27	0.20	0.14	0.07												
0.725	0.95	0.81	0.75	0.70	0.66	0.62	0.59	0.55	0.52	0.49	0.46	0.39	0.33	0.26	0.20	0.13	0.07													
0.75	0.88	0.74	0.67	0.63	0.58	0.55	0.52	0.49	0.45	0.43	0.40	0.33	0.26	0.19	0.13	0.065														
0.775	0.81	0.67	0.61	0.57	0.52	0.49	0.45	0.42	0.39	0.36	0.33	0.26	0.19	0.12	0.065															
0.8	0.75	0.61	0.54	0.50	0.46	0.42	0.39	0.35	0.32	0.29	0.27	0.19	0.13	0.06																
0.825	0.69	0.54	0.48	0.44	0.40	0.36	0.33	0.29	0.26	0.23	0.21	0.14	0.07																	
0.85	0.62	0.48	0.42	0.37	0.33	0.29	0.26	0.22	0.19	0.16	0.14	0.07																		
0.875	0.55	0.41	0.35	0.30	0.26	0.23	0.19	0.16	0.13	0.10	0.07																			
0.9	0.48	0.34	0.28	0.23	0.19	0.16	0.12	0.09	0.06	0.028																				
0.91	0.45	0.31	0.25	0.21	0.16	0.13	0.09	0.06	0.028																					
0.92	0.43	0.28	0.22	0.18	0.13	0.10	0.06	0.031																						
0.93	0.40	0.25	0.19	0.15	0.10	0.07	0.033																							
0.94	0.36	0.22	0.16	0.11	0.07	0.036																								
0.95	0.33	0.18	0.12	0.08	0.035																									
0.96	0.29	0.15	0.09	0.04																										
0.97	0.25	0.11	0.05																											
0.98	0.20	0.06																												
0.99	0.14																													

k: Figures obtained by cosθ_0 and cosθ_1

■ Factor K_2 selection

Power factor (cosθ_2)	0.7	0.75	0.8	0.85	0.875	0.9	0.91	0.92	0.93	0.94	0.95	0.96	0.97	0.98	0.99
$K_2 = \sqrt{\frac{1}{\cos^2\theta_2} - 1}$	1.02	0.88	0.75	0.62	0.55	0.48	0.45	0.43	0.40	0.36	0.33	0.29	0.25	0.20	0.14

K_2: Figures obtained by cos θ_2

Power Monitoring Equipment General Information

Power monitoring equipment (F-MPC) F-MPC60, F-MPC30, F-MPC04 series

■ Description

- FUJI power monitoring equipment (F-MPC) realizes fine power management to contribute to energy-saving.
- We can offer you various F-MPC equipment such as F-MPC04 series power monitoring unit that measures electric power of one to multi-circuits, and compact size F-MPC60G, F-MPC30 series multifunctional digital relay that protects, controls, and measures high-voltage distribution facilities.
- As support tool, a power monitoring system software, F-MPC-Net is also available, which collects and analyzes data measured by F-MPC.
- As related products of F-MPC, molded case circuit breaker with ZCT and split type current transformer are introduced.

F-MPC60G (UM63FN-E5AK)

KKD08-176

F-MPC04S (UM03)

■ Power monitoring equipment used in power distribution system

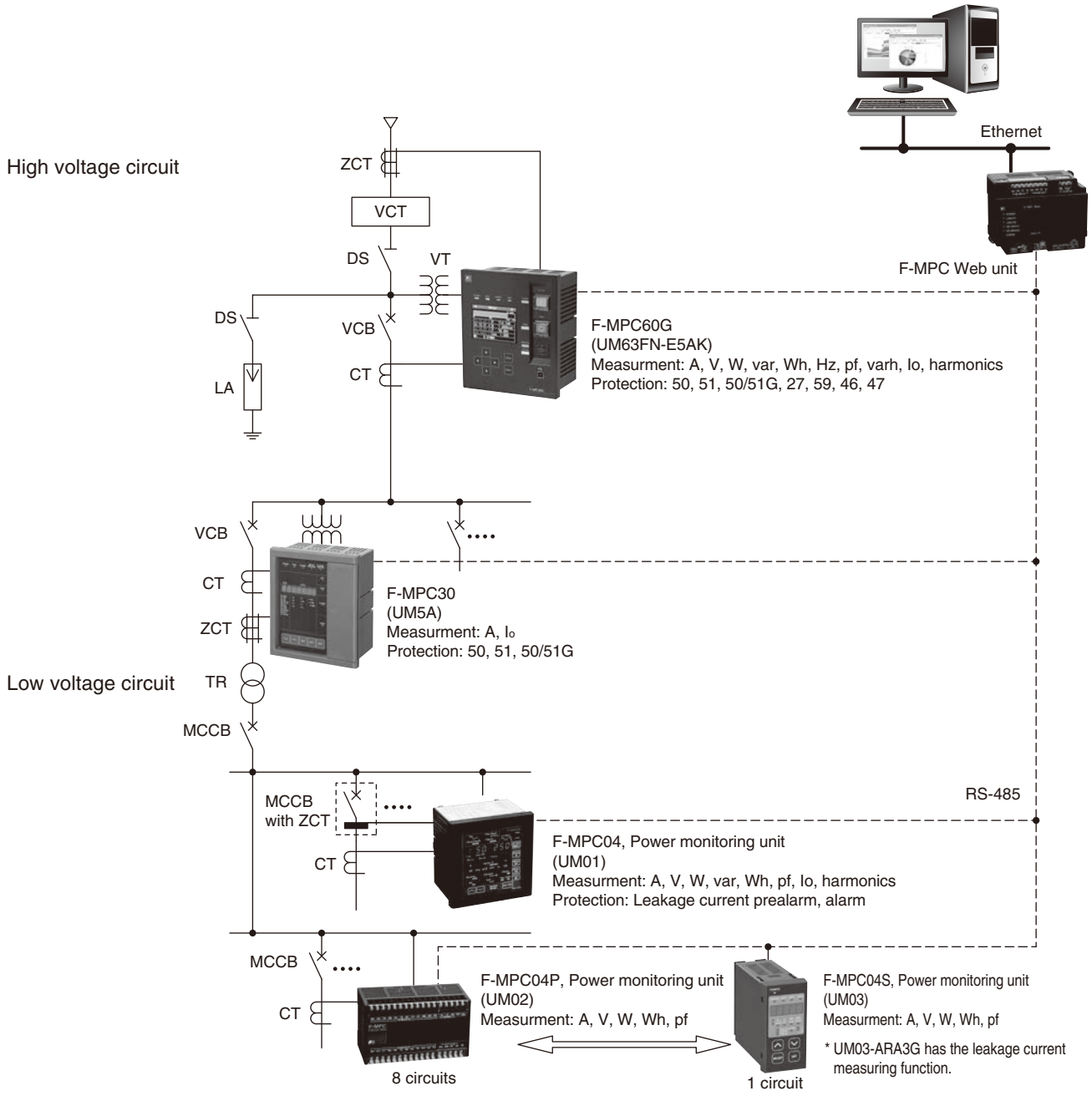

Multiple function protectors and controllers F-MPC60, F-MPC30 series

■ Description

- FUJI multiple function protector and controller (F-MPC) performs energy control to contribute to energy-saving. The F-MPC60G, F-MPC60B and F-MPC30 are a kind of multifunctional digital relays.
- Although these series are very compact, they integrate multiple functions in a compact body, such as protection, measurement, operation, and monitoring of high-voltage power distribution and switching facilities. They can also transmit data obtained from these functions to upper level controllers.

KK02-042

F-MPC60G (UM63FN-E5AK) **F-MPC30 (UM5ACG-H5R)**

■ Functions

The functions of F-MPC60 and F-MPC30 series are listed below.

Series		F-MPC60G	F-MPC60B	F-MPC30
Type		**UM63FN-E□AK**	**UM43FG-E5AK**	**UM5ACG-H5R**
Installation location		Receiving or feeder		Feeder
Application (phase: line)		3:3, 3:4		3:3, 3:4
VT voltage	Input	2VT/3VT star		—
	Voltage indication	Between phases, between lines		—
Ground fault system	System type	Direct/resistance		Direct/resistance
IO detection	①Residual (3XCT)	○		○
	②Tertiary winding (100/5A)	○		○
	③ZCT (5 to 100/5A)	○		○
	④ZCT (5 to 400/5A)	○		○
	⑤ZCT (200/1.5mA)	—		—
	⑥ZCT (100/1A) or (70/1A) or secondary I input (0.002 to 0.4A)	—		—
E0 detection * Feeder: Depending on MN signal.	EVT (3Ry= 110V)	—		—
	EVT (3Ry= 190V)	—		—
	ZPD-1 (FUJI-made)	—		—
	MN signal output	—		—
	MN signal input	—		—
Protective characteristic (current)	SI, VI, LT, EI, I^2t	○		○ (without I^2t)
	DT1 (short-time)	○		○
	DT2 (definite-time)	○		○
Control voltage	Rating	100V DC		100/200V DC
	Allowable range	80 to143V DC		80 to 286V DC
Transducer output selection	No. of output pole	6		—
	(Function and terminal)	Select		—
No. of DI/DO		8 : 8		1 : 3
No. of CPU		2		1
External plug		—		○
CB close/open	CB making slow-down monitoring function	○		—
	Harmonic voltage (3, 5, 7, Total)	—		—
	Harmonic current (3, 5, 7, Total)	○		—
	Demand current	○		—
Display mode	All or part: changeable	○		— (All only)

○ Available — Not available

Power Monitoring Equipment
Multiple function protectors and controllers F-MPC60G, F-MPC60B, F-MPC30

■ Functions (continued)

Series			F-MPC60G	F-MPC60B	F-MPC30
Type			**UM63FN-E□AK**	**UM43FG-E5AK**	**UM5ACG-H5R**
Installation location			Receiver	Receiver or feeder	Feeder
Protection	Overcurrent Instantaneous	50	○	○	○
	Overcurrent Short-time	51DT1	○	○	○
	Overcurrent Definite-time	51DT2	○	○	○
	Overcurrent Inverse-time *1	51	○	○	○ *2
	Ground-fault Instantaneous	50G	○	○	○
	Overcurrent Inverse-time *2	51G	○	○	○
	Ground fault directional	67	—	—	—
	Phase-loss	46	○	○	—
	Inverse-phase	47	○	○	—
	Voltage established	84	—	—	—
	Undervoltage	27	○	○	—
	Overvoltage	59	○	○	—
	Ground-fault overvoltage	64	—	—	—
	Current prealarm	OCA	○	○	○
	Ground-fault current prealarm	OCGA	○	○	○
Measurement	Current (r, s, t)	A	○	○	○
	Voltage (line)	V	○	○	—
	Voltage (phase)		○	○	—
	Active power (±)	W	○	○	—
	Reactive power (±)	Var	○	○	—
	Power-factor (±)	PF	○	○	—
	Frequency	Hz	○	○	—
	Active electric energy (+)	WHM	○	○	—
	Active electric energy (–)	WHM	○	○	—
	Reactive electric energy (+)	VarH	○	○	—
	Reactive electric energy (–)	VarH	○	○	—
	Ground fault (zero-phase) voltage	V0	—	—	—
	Ground fault (zero-phase) current	A0	○	○	○
	Harmonic current (3, 5, 7, Total)	HA	○	○	—
	Harmonic voltage (3, 5, 7, Total)	HV	○	—	—
	Demand current (r, s, t)	DA	○	○	—
	Demand active power	DW	○	○	—
	Max. zero-phase current value		○	○	○
	Max. zero-phase voltage value		—	—	—
	Max. demand current value (r, s, t)		○	○	—
	Max. demand power		○	○	—
	Total electric energy (+)		○	○	—
	Total electric energy (–)		○	○	—
	Min. voltage value (between lines)		○	○	—
Preventive maintenance	50(INST)	Operation Count	○	○	○
	51DT1	Operation Count	○	○	○
	51DT2	Operation Count	○	○	○
	51	operation Count	○	○	○
	67DG	Operation Count	—	—	—
	50G	Operation Count	○	○	○
	51G	Operation Count	○	○	○
	OCA	Operation Count	○	○	○
	OCGA	Operation Count	○	○	○
	Phase loss	Operation Count	○	○	—
	Inverse phase	Operation Count	○	○	—
	27	Operation Count	○	○	—
	59	Operation Count	○	○	—

*1 with SI, VI, LT, EI, and I^2t characteristics
*2 with SI, VI, LT, and EI characteristics

○ Available — Not available

Power Monitoring Equipment
Multiple function protectors and controllers F-MPC60G

■ Features

- **Improved visibility**
  Clear visibility and operability via color LCD.
- **Maintains Compatibility with Existing Models**
  Succeed to some function of F-MPC60B Series such as same dimension, same terminal block and communication. You can use this model without any design change.
- **Equipped with Waveform Recording Function for System Failure**
  Incorporated a function for recording failure waveforms during protective operation. Calendar functions are newly added to support failure analysis.
- **Compliant with the IEC Standards**
  Complies with up-to-date contents of the standards. Supporting world wide matters is possible. (CE self-declared compliance)
- **Evolution of Support Functions with the Loader Software**
  Equipped with “Relay test assist function (patent pending)” that directs and assists test conditions of selected protecting elements.

■ Type number nomenclature

UM63FN - E □ A K

Basic Type
UM6 : F-MPC60G series
(3ø4W use)

External interface
A: "4-20mA output" and "RS-485 interface"

CT secondary current
5: 5A
1: 1A

Control power supply
E: 100V AC/DC common use

Power Monitoring Equipment
Multiple function protectors and controllers F-MPC60G

■ Specifications
• General specifications

Item		Specifications
Control power supply		100 VDC (80 to 143 VDC), 100 VAC (85 to 132 VAC) common *1
Inrush current		15 A or less, 4.5 ms or less (100 VAC, 50 Hz) 13 A or less, 7 ms or less (100 VDC)
Power consumption (main unit)		15 W or less with DC input, 20 VA or less with AC input
FUSE		Contained in control power supply (3 A)
Rated frequency		50/60 Hz (setting selection)
Rated current (CT secondary)		AC 5 A/1 A: Specify when ordering
Rated voltage (VT secondary)		110 VAC
Zerophase rated current	CT combination	AC 5 A (CT residual circuit,CT tertiary) Note 2: Ratio of CT tertiary is from 5 to 400 A: 5 A can be set (from 5 to 100 A: 5 A steps, from 110 to 400 A: 10 A steps) Note 3: Io/3Io display selectable for CT tertiary
Rated load VA	CT secondary	0.5 VA or less
	VT secondary	1.0 VA or less
Insulation resistance		Between collective electric circuits and ground : 100 MΩ or more (500 VDC ohmmeter) Between mutual electric circuits : 5 MΩ or more Between contact circuit terminals : 5 MΩ or more
Vibration resistance		Oscillation frequency 10 Hz, forward/backward & left/right double amplitude 5 mm, up/down double amplitude 2.5 mm, for 30 sec. each Oscillation frequency 16.7 Hz, double amplitude 0.4 mm, forward/backward, left/right, up/down, for 10 min. each Oscillation frequency 10 to 59 Hz, 0.035 mm Oscillation frequency 59 to 150 Hz, 0.5 G 10 to 150 Hz for each axis 8 minutes CLASS I
Shock resistance		30 G, 3-axes 6-directions, 3 times each Peak acceleration 5 G pulse width 11 ms, 3-axes 6-directions, 3 times each
Bump resistance		Peak acceleration 10 G pulse width 16 ms, 3-axes 6-directions, 1000 times each
Earthquake resistance		Oscillation frequency 1 to 8.5 Hz, X-axis (horizontal) 3.5 mm, Y-axis (vertical) 1.5 mm Oscillation frequency 8.5 to 35 Hz, X-axis (horizontal) 1 G, Y-axis (vertical) 0.5 G Method A 1 to 35 Hz, 10 minutes, CLASS I
Dielectric strength		Between collective electric circuits and ground 2 kVAC *2, Between mutual electric circuits 2 kVAC However, this excludes RS-485 communication, MN signal wire, transducer output terminal, and kWh P output terminals. ON, OFF, between trip contact circuit terminals 1 kVAC, 1 minute.
Electrostatic noise immunity		Metal part contact ± 8 kV, Panel surface (non-metallic, non-contact) ±15 kV *4
Noise resistance		Oscillation frequency 1 MHz, common mode/differential mode First wave crest height 2.8 kV, 1/2 damping time 3 to 6 cycles. Repeating frequency 6 to 10 times/1 period of commercial frequency (asynchronous) JEC2501 waveform 2 (ANSI compliant)
		Peak voltage 1.5 kV Square wave impulse noise (1 ns/1 μs 10 minutes) However, MN signal wire, communication wire (RS-485), transducer output wire, and kWh pulse output wire have a peak voltage of 1.0 kV (clamp), square wave impulse noise (1 ns/1 μs 10 minutes)
		Transceiver noise: 10 V/m in 140 MHz band, 430 MHz band, 900 MHz band Mobile (800 MHz/1.5 GHz 0.8 W), PHS (1.9 GHz 10 mW) attached Radiation electromagnetic field immunity: 80 MHz to 1 GHz, 1.4 GHz to 2.7 GHz 10 V/m CLASS III Spot frequency 80, 160, 380, 450, 900, 1850, 2150 MHz Conduction interference immunity: 150 kHz to 80 MHz, 10 V/m, CLASS III
		Electromagnetic emission Conduction: 150 kHz to 30 MHz, 79 db (up to 500 kHz), 73 db (from 500 kHz) peak value Radiation: 30 MHz to 2.0 GHz, 40 μV/m (up to 230 MHz), 47 μV/m (230 MHz to 1 GHz) (quasi-peak value/10 m position) 76 μV/m (from 1 GHz)(peak/3 m position)
		Fast transient/burst Control power: ground collective & I/O 2 kV, communication (clamp) 1 kV
		Commercial frequency electromagnetic field immunity Continuation 30 A/m, 1 to 3 s: 300 A/m
Lightning impulse		Between collective electric circuits and ground However, this excludes MN signal, communication wire (RS-485), transducer output wire, and kWh pulse output wire. : 5 kV 1.2 x 50 μs 3 times each positive and negative Between mutual transformer circuits : 5 kV 1.2 x 50 μs 3 times each positive and negative Between measurement device transformer circuit and control circuit : 5 kV 1.2 x 50 μs 3 times each positive and negative Between mutual control circuits : 3.0 kV 1.2 x 50 μs 3 times each positive and negative Between contact (trip output) and circuit terminal : 3.0 kV 1.2 x 50 μs 3 times each positive and negative Between control power supply circuit terminals : 3.0 kV 1.2 x 50 μs 3 times each positive and negative Between measurement device transformer circuit terminals : 3.0 kV 1.2 x 50 μs 3 times each positive and negative Between communication wire and ground *6 : 1.0 kV 1.2 x 50 μs 3 times each positive and negative
Overload capacity		CT circuit: (continuous) 4 times that of rated value (20/4 A) (short-time) 40 times that of rated value (200/40 A) 1 second x 2 times, 100 times that of rated value (500/100 A) 100 ms x 1time
		Io(residual/tertiary) circuit: (continuous) 4 times that of rated value (20/4 A) (short-time) 40 times that of rated value (200/40 A) 1 second x 2 times, 70 times that of rated value (350/70 A) 100 ms x 1time
		VT circuit: 1.25 times that of rated value 10 seconds x 1 time

• General specifications (Cont.)

Item	Specifications
Ambient temperature	-10°C to 60°C (no dew condensation or frost shall be observed): working guarantee *3 (0°C to 40°C: characteristics guarantee)
Storage temperature	-20°C to 70°C (no dew condensation or frost shall be observed)
Relative humidity	20% to 90% RH (no dew condensation shall be observed)
Usage atmosphere	No corrosive gas or excessive dust shall observed
Grounding	D class grounding (100 Ω or less)
Mass	Maximum 1.5 kg (UM63FN-E5A measured)
Permissible instantaneous power failure time	20 ms (continuous operation); however, display will disappear

Note: *1 When protection 27UV is used for other than instantaneous operation (operating time 0 s setting) in the control power AC power supply, use together with an uninterruptible power system or AC power supply unit (type: UM2P-A1, separately sold).
*2 Do not apply 2 kVAC between wires.
*3 The guaranteed working temperature is the temperature at which operation is guaranteed within two times that of the guaranteed accuracy value at the JEC characteristic guaranteed temperature, and within the JIS temperature impact accuracy.
*4 The loader (USB) on the front main unit panel is not considered a communication wire.

• External I/O Specifications

Item	Specifications		
Input circuit	100 VDC (143 VDC or less)/100 VAC (132 VAC or less) common [DC input] ON voltage: 40 VDC or more and 70 VDC or less / [AC input] ON voltage: 40 VAC or more and 70 VAC or less		
	Number of input points: Select input 8 points, TC disconnect monitor, CB 52a		
Output circuit	CB ON/OFF/trip	Making current:	15 A (110 VDC), acceptable continuous flowing current: 4 A 15 A (100 VAC inductive load cosø = 0.4) allowable continuous current: 4 A
		Break current:	0.2 A (110 VDC inductive load L/R = 7 ms or less) 4 A (100 VAC inductive load cosø = 0.4)
	Other	Switching current:	0.2 A (110 VDC inductive load L/R = 15 ms or less), acceptable continuous flowing current: 1 A 1 A (100 VAC inductive load cosø = 0.4) allowable continuous current: 1 A

Power Monitoring Equipment
Multiple function protectors and controllers F-MPC60G

■ Specifications

• Measurement/Display Specifications

(1) Measurement display in steady state

Item		Valid display range	Accuracy *1	Measurement range *2
Current / demand current *3 / demand current maximum value		0.8% to 100% of CT primary rated current (FS)	±1.0%	0, or 0.8% to 800% of CT primary rated current
		100% to 800% of CT primary rated current (FS)	±5%	
Zero-phase current / zero-phase current maximum value *6		1.5% to 100% of CT primary rated current (FS)	±1.0%	0, or 1.5% to 800% of CT primary rated current
		100% to 800% of CT primary rated current (FS)	±5%	
Voltage	2VT	Line voltage: 5 V to 150 V at VT secondary voltage value(FS)	±1.0%	Line voltage: 0, or 5 to 150 V at VT secondary rated voltage
	3VT	Phase voltage: 5 V to 150 V at VT secondary voltage value(FS) Line voltage: 8.7 V to 260 V at VT secondary voltage value(FS)	±1.0%	Phase voltage: 0, or 5 to 150 V at VT secondary rated voltage Line voltage: 0, or 8.7 to 260 V at VT secondary rated voltage
Frequency		45 to 55 Hz when set to 50 Hz (FS)	±0.5%	45 to 55 Hz when set to 50 Hz
		55 to 65 Hz when set to 60 Hz (FS)		55 to 65 Hz when set to 60 Hz
Power factor		Leading 0.00 to 1.00 to lagging 0.00	±5% (Conversion by 90° phase angle)	Leading 0.00 to 1.00 to lagging 0.00 Measurement range and symbols *5
Active power *3 Demand active power Demand active power maximum value		0.004 to 1 kW at VT, CT transformer secondary (FS) Phase angle 0 to 60° (lagging) Power factor 1.00 to 0.50 (lagging)	±1.0%	0, or 0.004 to 1 kW symbol at VT and CT transformer secondary *5
Reactive power		0.004 to 0.5 kvar at VT, CT transformer secondary Phase angle 0 to 60° (lagging) Power factor 1.00 to 0.50 (lagging)	±1.0% of 1 kvar at transformer secondary (FS)	0, or 0.004 to 1 kvar symbol at VT and CT transformer secondary *5
Active/Reactive electric energy *4		Five-digit display from 0 to 99999 The multiplying factor of the measurement display is fixed according to the CT primary rated current and VT primary rated voltage values	Equivalent to Table 4: Standard Measuring Instruments in JIS C 1216 (Measuring Instruments with Transformers)	Five-digit display from 0 to 99999
Harmonic current	Tertiary, quinary	1.5% to 100% of CT primary rated current (FS)	±2.5%	0, or 1.5% to 800% of CT primary rated current
		100% to 800% of CT primary rated current (FS)	±5%	
	Septenary, overall	1.5% to 100% of CT primary rated current (FS)	±5%	
		100% to 800% of CT primary rated current (FS)	±10%	
	Graph display	Ratio of rated current displayed Tertiary, quinary, septenary display value: (○ ary current value/rating) x 100 Overall display value: $\sqrt{3rd^2+5th^2+7th^2}$ / rating ×100	-	The bar graph shows 20%, 50%, 100%, 800% auto range switching
Harmonic voltage	Tertiary, quinary	5 to 150 V at VT secondary voltage value (FS)	±2.5%	0, or 5 to 150 V at VT secondary rated voltage
	Septenary, overall	5 to 150 V at VT secondary voltage value (FS)	±5%	
	Graph display	Ratio of rated voltage displayed Tertiary, quinary, septenary display value: (○ ary voltage value/rating) x 100 Overall display value: $\sqrt{3rd^2+5th^2+7th^2}$ / rating ×100	-	The bar graph shows 20%, 50%, 150% auto range switching

(2) Measurement display of accident display / accident record

Item	Valid display range	Accuracy *1	Measurement range *2
Accident (generated phase) maximum current	10% to 2000% of CT primary rated current (FS)	±5%	10% to 2000% of CT primary rated current
Phase other than accident occurrence phase	2% to 2000% of CT primary rated current (FS)		0, or 2% to 2000% of CT primary rated current
Accident (generated phase) maximum voltage (59) Accident (generated phase) minimum voltage (27) Phase other than accident occurrence phase	5 to 150 V at VT secondary rated voltage (FS)	±5%	0, or 5 to 150 V at VT secondary rated voltage
Accident (generated phase) maximum zero-phase current *6	2% to 800% of CT primary rated current (FS)	±5%	2% to 800% of CT primary rated current
Phase other than accident occurrence phase	1.5% to 800% of CT primary rated current (FS)		0, or 1.5% to 800% of CT primary rated current

Note: *1 Accuracy does not include errors from the combined transformer.

*2 “0, a to n” means that “0” will be displayed from 0 to less than a.

*3 Demand measurement specification

Item	Specifications
Time period	You can select from 0 min/1 min/5 min/10 min/15 min or 30 min. (1 sec average will be indicated if you set at 0 min.)
Item displayed	Demand current, demand active power Maximum demand current value, maximum active power demand value (past maximum value till reset operation)
Measurement/display range	The same as present measurement value which is an instantaneous value

[Demand time]
A thermal bimetal type demand meter is designed to operate and indicate taking a relatively long time.
It will not respond to the instantaneous overload or input variation. Its operation and indication will follow the basic formula below.

[Example: demand current] $I[dm] = I[ins]\ (1-e^{-3t/t0})$ —— formula (1)

where I [dm]: demand meter display value, I[ins]: certain constant input value of instantaneous current, t0: Average setting time

t/t0	0	0.5	1	1.5	2.0	2.5	3.0
I[dm]	0	0.777	0.950	0.970	0.997	0.9994	0.9999

When a certain input is continuously energized, it calculates with the above exponent function and displays the results. The demand time is the time to be required to reach 95% of the display value of a certain current I[ins]. Therefore, it requires almost three times the setting time for the display value to indicate about 100% input.
The demand time shall be selected based on the target equipment instrument of monitoring or monitoring purpose.

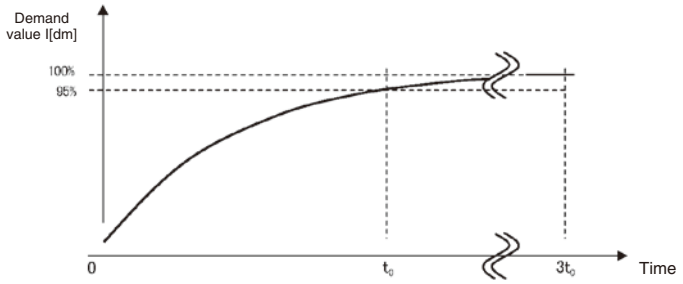

Demand Curve

*4 There are two electric energy displays: [1] total electric energy (zero-clear not possible) and [2] periodic electric energy (zero-clear possible).

*5 We use one sign, ±, to indicate power selling/purchasing in power measurement or LEAD/LAG in power factor measurement. (left blank in case of +) The meaning of ± is shown below by measurement item.

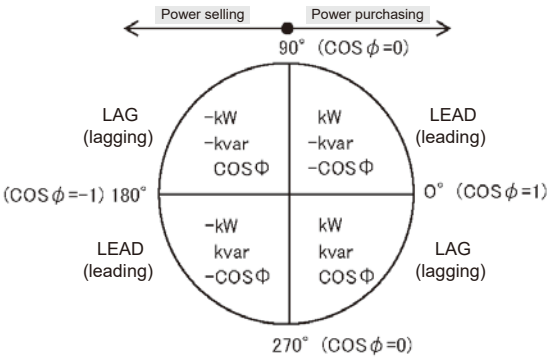

[1] Active power kW
+: Power purchasing (power consumption)
-: Power selling (reverse flow power)
[2] Reactive power kvar
+: lagging current by reactive power measurement method
-: leading current by reactive power measurement method
LEAD/LAG will be reversed according to power selling/power purchasing.
[3] Power factor COSφ
+: Lagging power factor
-: Leading power factor

*6 For CT method, Io and 3Io display can be selected and set.
Io display : Input current displayed as is as measurement value and accident value.
3Io display : Three times the input current displayed as measurement value and accident value.

Power Monitoring Equipment
Multiple function protectors and controllers F-MPC60G

■ Specifications

• History data

Item	Display range
50 (INST) operation count	0 to 9,999 (times)
51 (DT) operation count	0 to 9,999 (times)
51 (DT2) operation count	0 to 9,999 (times)
51 (OC) operation count	0 to 9,999 (times)
50G operation count	0 to 9,999 (times)
51G operation count	0 to 9,999 (times)
59 (OV) operation count	0 to 9,999 (times)
27 (UV) operation count	0 to 9,999 (times)
27 (UV2) operation count	0 to 9,999 (times)

Item	Display range
Open phase operation count	0 to 9,999 (times)
Reverse phase operation count	0 to 9,999 (times)
OCA operation count	0 to 9,999 (times)
OCGA operation count	0 to 9,999 (times)
Operating time	0 to 9,999 x 100 (hr)
Switching count	0 to 9,999 x 10 (times)
Actual cutoff count	0 to 9,999 (times)

(Other history display) Fault value display: Fault value display on occurrence of a fault, history maximum values of zero-phase voltage/current, maximum demand value (A, W), and minimum instantaneous voltage

(Note) 1. Count initial value settings can be changed for the count history data.
2. "Operating time" refers to the integrated value of time when the control power of the F-MPC60G Series is normal and input 52a (circuit breaker answer-back signal) of terminal block B-13 is on.
3. The operation count for multi-element protection (such as 50 operating at R/S/T) is only counted as 1 even during multi-operation when there is concurrent occurrence (including delays in output continuity).
4. The actual cutoff count is the number of times the trip relay was turned on by the protective relay (including external trip) during circuit breaker inrush (52a in on-state).

• Specifications of protective relays

Item	Current/voltage operate value characteristic adjustment range	Operating time (timer) characteristic adjustment range	Characteristics	
			Operate value	Operating time
50 (instantaneous)	1.0 to 20.0 times the CT rated current (in steps of 0.1 times), Lock	(Fixed)	±5%	40 ms or less
51DT (fixed time limit)	0.2 to 20.0 times the CT secondary rated current (in steps of 0.1 times), Lock	0.00, 0.05 to 5.00 s (0.01 s steps)	±5%	Less than 1 s ± 50 ms 1 s or more ± 5%
51DT2 (fixed time limit)	20 to 1000% of CT rated current (in steps of 1%), Lock	0.00, 0.05 to 10.00 s (0.01 s steps)	±5%	Less than 1 s ± 50 ms 1 s or more ± 5%
51OC (inverse time limit) IEC: SI, EI, VI, LT, I^2t IEEE: MI, EI, VI *3	10 to 240% of CT rated current (in steps of 1%), Lock *OC/OL selection *4	Time scale factor: 0.2 to 20.0 times (0.1 steps) (Operating time: min 150 ms)	±5%	setting value of 300%: ± 12% 500: ± 7%, 1000%: ± 5% (Lower limit ± 100 ms)
OCA (Overcurrent pre-alarm)	10 to 100% of CT rated current (in steps of 1%), Lock	10 to 200 s (10 s steps)	±10%	±5%
50 G (instantaneous, short time limit)	0.1 to 8.0 times the CT rated current (in steps of 0.1 times), Lock	0.0 to 180.0 (0.1 s steps) *1	±5%	±5% (Lower limit ± 50 ms)
51 G 3CT residual method or CT tertiary IEC: SI, EI, VI, LT IEEE: MI, EI, VI *3 (inverse time limit selected)	0.02 to 1.00 times the CT rating (in steps of 0.01 times), Lock	0.5 to 50.0 times (0.1 steps) (Operating time of min 150 ms) *1	±5% (Lower limit ± 100 mA)	setting value of 300%: ± 12% 500: ± 7%, 1000%: ± 5% (Lower limit ± 100 ms)
(fixed time limit selected)	0.02 to 1.00 times rating (in steps of 0.01 times), Lock	0.01 to 600.00 s (0.05 s steps)	±5% (Lower limit ± 100 mA)	±5% (Lower limit ± 50 ms)
OCGA (zero-phase current prealarm)	50 to 100% of 51G pick-up current setting value (in steps of 1%), Lock	0.10 to 600.00 s (0.05 s steps)	±10% (Lower limit ± 100 mA)	±5% (Lower limit ± 50 ms)
59 (OV)	VT secondary: 60 to 150 V (in steps of 1V), Lock	0.0 to 60.0 s (0.1 s steps)	±5%	±5% (Lower limit ±50 ms)
27 (UV) *2	VT secondary: 10 to 110 V (in steps of 1 V), 52a link on 10 to on 110 V (in steps of 1 V), Lock	0.0 to 60.0 s (0.1 s steps)	±5%	±5% (Lower limit ±50 ms) When 0 s is set: 35 ms or less
27 (UV 2) *2	VT secondary: 10 to 110 V (in steps of 1 V), Lock	0.0 to 60.0 s (in steps of 0.1 s)	±5%	±5% (Lower limit ±50 ms) When 0 s is set: 35 ms or less
Open phase (Current detection)	-	-	Imbalance ratio 50 to 80% or more	2 s (fixed) ± 1 s
Reverse phase (Voltage detection)	-	-	-	0.5 s or less

*1 With a function to prevent malfunctions due to exciting current
[1] If the fundamental wave current of zero-phase current is 15% or more of the rated current and the secondary harmonic content ratio is about 15% or more, the device will perform the function to prevent malfunction under inrush exciting current to lock the protection 50G and 51G operation. In the case of 50G with the operating time being 0 s, however, this function will not work.
[2] If the fundamental wave current of load current (CT secondary) is higher than the rated current and the secondary harmonic content ratio is about 15% or more, the device will perform the function to prevent malfunction under inrush exciting current to lock the protection 50G and 51G operation. In the case of protection 50G with the operating time being 0 s, however, this function will not work. The secondary harmonics suppression will be locked when the zero-phase current or one of load currents (A/B/C) reaches the predetermined value.
[3] The second harmonic suppression function in [1] and [2] above can be set as enabled/disabled (Loc).
*2 Voltage determination is selectable from AND, three-phase OR, and 2 OUT OF 3 (2/3 determination).
*3 For characteristics formula, refer to 5. "Protection Characteristics."
*4 When OL is selected, 51OC performs an AND operation with 51DT. (Even if 51DT satisfies trip conditions, 51DT will not operate until 51OC operates.) For details, refer to Appended Figure 5.

■ Specifications

• Communications specifications

item		Specifications	
		F-MPC-Net protocol	Modbus RTU protocol
Standard		EIA RS-485	
Data exchange		1:N (this device) polling/selecting	
Maximum transmission distance		1,000 m	
Number of connection stations		Maximum 64 units Note2 /one system (however, the master device is included in the 64 units)	
Address setting		01 to 99	
Transmission speed		4800/9600/19200/38400 bps	
Data format	Start bit	1 bit (fixed)	1 bit (fixed)
	Data length	7/8 bits (select)	8 bit (fixed)
	Parity bit	None/Even number/Odd number (select)	None/Even number/Odd number (select)
	Stop bit	1 bit (fixed)	1/2 bit (auto) Note1

Note 1: When the Modbus RTU protocol is selected, the character configuration is fixed at 11 bits. The stop bit length is automatically recognized based on whether or not parity is selected.
Note 2: When 32 units are connected, two units are recognized as one unit and the maximum number of connection will be lower.

• Specifications of transducer outputs

Item		Specifications	Acceptable error
Transducer output signal		4 to 20 mA (acceptable load 270 Ω or less)	
Signal type	Current (Ia, Ib, Ic)	4 to 20 mA versus 0 to CT rating	±1.5%
	Line voltage (Vuw, Vvw, Vwu)	(1) 4 to 20 mA versus VT secondary 0 to 150 V (2) 4 to 20 mA versus VT secondary 0 to 150 x √3 V Note1	
	Phase voltage (Vun, Vvn, Vwn)	(1) 4 to 20 mA versus VT secondary 0 to 150 x √3 V (2) 4 to 20 mA versus VT secondary 0 to 150 V Note1	
	Active power (W)	4 to 20 mA versus 0 to 1 kW (CT5A conversion)	
	Reactive power (var)	4 to 12 to 20 mA versus -1 kvar to 0 to 1 kvar (CT5A conversion)	
	Frequency (Hz)	4 to 20 mA versus 45 to 55 Hz or 55 to 65 Hz	
	Power factor (PF)	4 to 12 to 20 mA versus LEAD 0.5 to 1 to LAG 0.5	±5%
	Current expansion (Ia, Ib, Ic)	4 to 16 mA versus 0 to CT rating	±1.5%
		16 to 20 mA versus CT rating to CT rating x 5 times	±5%
	Single-phase active power	4 to 20 mA versus 0 to 0.5 kW (CT5A conversion)	±1.5%
	Single-phase reactive power	4 to 12 to 20 mA versus -0.5 kvar to 0 to 0.5 kvar (CT5A conversion)	
	Zero-phase current (Io)	3CT residual: 4 to 20 mA versus 0 to CT rating	±1.5%
Output response time		2 sec. or less (when rated input is applied, the time will be within 90% ±1% of the final steady value)	

• Negative side of the output signal is common.
• The limiter is applied when the upper/lower limit value is exceeded. The lower limit value and upper limit value are fixed at 4 mA and 20 mA.
• Acceptable error is an error for FS. Example: If CT primary rated current is 400 A, the error is ± 6.0 A or less. Whether input current is 40 A or 400 A, the error is 6.0 A or less. Please note that this device does not offer zero- or spanadjustment function. Make an adjustment externally as necessary.

Note1 (1): At line voltage 100/110/120V, (2): At line voltage (100/110/120V) x √3

* The default setting is described in the table below.

Transducer output channel	Setting when shipped
CH1	No output
CH2	No output
CH3	No output
CH4	No output
CH5	No output
CH6	No output

• Specifications of kWh pulse output

Item	Specifications
Output	Open collector output
Output capacity	Maximum 150 VDC, 100 mA
Pulse width	200 ±20 ms
Output pulse unit	10^nkWh/pulse (n = - 2 to 4 in setting)
	2,000 pulse/kWh (n = F in setting)

Power Monitoring Equipment
Multiple function protectors and controllers F-MPC60G

■ Specifications

• Accident waveform recording data specification

Item		Specifications		
Number of waveform records		Maximum of 2		
Waveform record updates		at time of protective operation	Updated upon operation of one of the 13 protection elements, other than alarm (OCA, OCGA) operations. If an accident occurs more than 2 times, the accidents will be cleared starting from the oldest data No. 2.	
		manual loading	Select record information > waveform record in normal mode. Place the cursor (blue marker) on the waveform capture below the No. 1 and 2 lists, and press the ENTER key. “Do you want to capture the waveform? YES/NO” Select YES to record the waveform.	
Record waveform elements (data per point)		Analog input: Current (A, B, C), voltage (ab, bc, ca), etc. (7 elements total) Input: MN, 52a, selection input 1 to 8, etc. (9 elements total), Output: CLOSE, OPEN, trip, device failure (4 elements total) Protection status: 59, 27, 27-2, 47, 50, 51, 51DT, 51DT2, OCA, 46, 50G, 51G, OCGA (13 elements total)		
Number of records		6,000 points (fixed)		
Record accuracy		Sampling electricity angle setting: Select from 3.75° (96 times), 7.5° (48 times), 15° (24 times), 30° (12 times). * The number inside the parentheses is the sampling count per cycle.		
Recording time	50 Hz	3.75° (96 times) setting: about 1.25 sec. (62.5 cycles) 15° (24 times) setting: about 5 sec. (250 cycles)	7.5° (48 times) setting: about 2.5 sec. (125 cycles) 30° (12 times) setting: about 10 sec. (500 cycles)	
	60 Hz	3.75° (96 times) setting: about 1.04 sec. (62.5 cycles) 15° (24 times) setting: about 4.16 sec. (250 cycles)	7.5° (48 times) setting: about 2.08 sec. (125 cycles) 30° (12 times) setting: about 8.33 sec. (500 cycles)	
Setting range for number of recording cycles after operation point		3.75° (96 times) setting: 3 to 31 cycles 15° (24 times) setting: 3 to 125 cycles	7.5° (48 times) setting: 3 to 62 cycles 30° (12 times) setting: 3 to 250 cycles	
Display position		Selecting the waveform record from the top screen in normal mode or from the records information will display a list. No. 1 is the latest data. Select any item and press the ENTER key to display a simplified waveform.		
Clear accident record / waveforms		It is only possible to clear everything. Select initialize from the top screen in settings mode, and then select clear accident record/ waveforms from the clear record screen. When asked “Initialize? YES/NO,” select YES to clear. Select using the ENTER key. However, this cannot be cleared while the main unit is displaying an accident. Accident record data will also be cleared.		

Note1: The filter is built into the device’s voltage/current input circuit component. Therefore, slow response to abrupt waveform changes may cause waveform record data to differ from actual input waveforms.
Note2: Image of actual waveform recording (e.g., at rated frequency = 50 Hz, sampling electric angle = 15°, number of cycles after operation = 100 cycles)

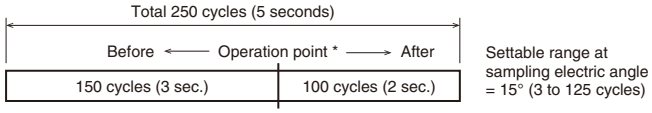

* The operation point is the moment of protection action (trip output).

• Clock specifications

Item	Specifications	Remarks
Clock accuracy	Within ±20 minutes/year	Average ambient temperature: At ±25°C
Power outage guarantee	7 days If a power outage exceeds the backup period, it will start up again at 2000-01-01 0:00.	Average ambient temperature: At ±25°C Control power must flow for at least 10 minutes to charge the backup electrical double-layer capacitor.

■ Indications & Settings

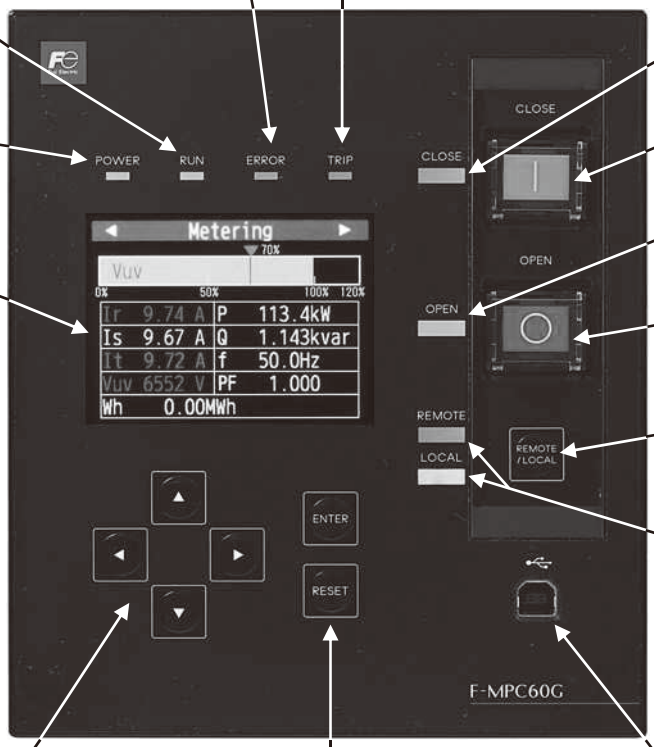

ERROR indicator (orange)
Indicates device failure when it is lit.

TRIP indicator (red)
Flickers when detecting protection, and lights up when operating protection.

RUN indicator (green)
Indicates normal operation when it is lit.

POWER indicator (green)
Indicates normal control power when it is lit.

LCD display screen

Circuit breaker operator
* Bus unit is not equipped with it.

CB-CLOSE indicator (red)
Indicates the circuit breaker is on by lighting.

CB-CLOSE switch
Switch for turning circuit breaker on

CB-OPEN indicator (green)
Indicates the circuit breaker is opened by lighting.

CB-OPEN switch
Switch for opening circuit breaker

REMOTE/LOCAL button
REMOTE/LOCAL direct switch button

REMOTE/LOCAL indicator (orange)
Remote/local status is indicated by lighting.

Operation buttons
◀▲▼▶(Arrow buttons)

Used for display switch, item selection and setting change.

Operation buttons
ENTER and RESET

Used for mode switch and confirmation of setting change. RESET button is also used for canceling the setting change, returning from the protection operation.

Loader PC connection port
USB type B connector

You can use convenient functions such as accident waveform data display and relay testing assistance by connecting with the free specially-designed PC application.

D1

Power Monitoring Equipment
Multiple function protectors and controllers F-MPC60G

■ Wiring diagram example

● Power receiving unit external wiring example (UM63FN-E□AK)

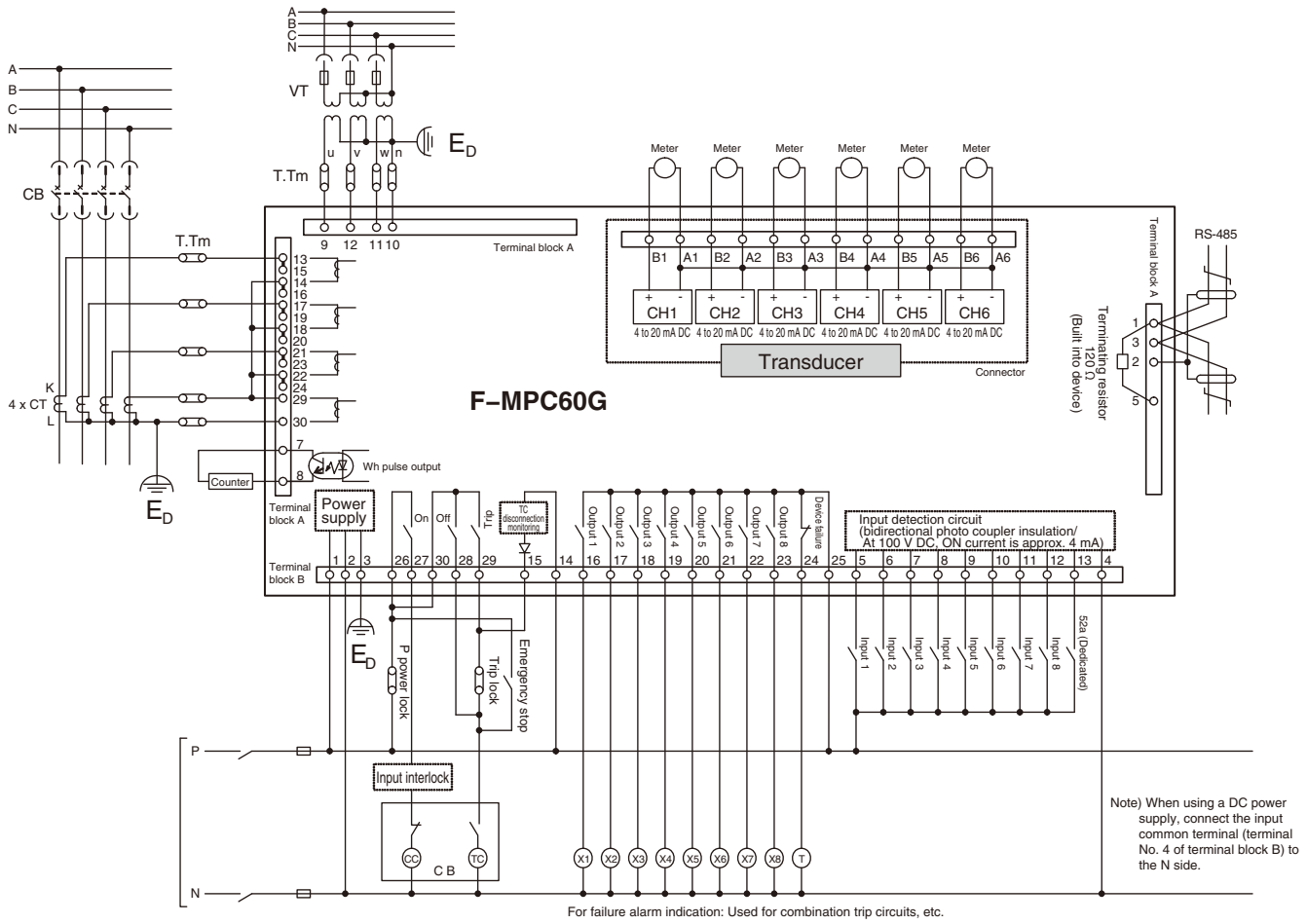

■ External dimensions [unit: mm]

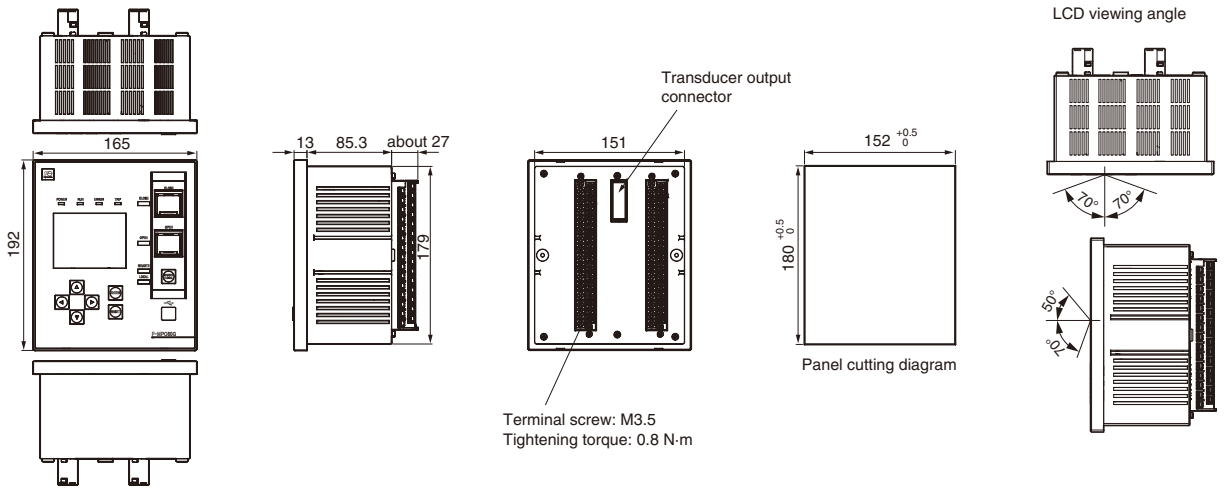

■ OC, 51G relay characteristics

Standard Inverse Time (SI) IEC characteristic

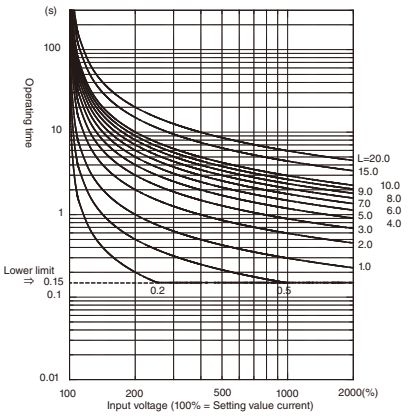

Note: The time setting (lever) is in steps of 10%.
(Lower limit: OC/51G and 0.2; Upper limit: OC is 20; 51G is 50)
Part of the lever is omitted in the above characteristic diagram.

$$t = \frac{0.14}{I^{0.02}-1} \times \frac{L}{10} \text{ (L: Time factor)}$$

Very Inverse Time (VI) IEC characteristic

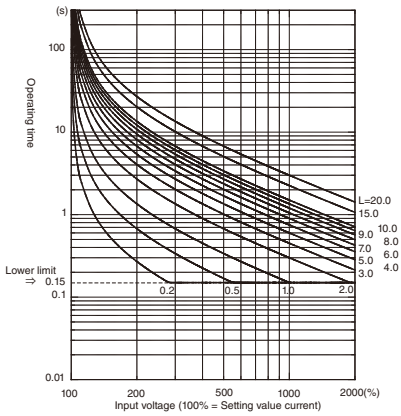

Note: The time setting (lever) is in steps of 10%.
(Lower limit: OC/51G and 0.2; Upper limit: OC is 20; 51G is 50)
Part of the lever is omitted in the above characteristic diagram.

$$t = \frac{13.5}{I-1} \times \frac{L}{10} \text{ (L: Time factor)}$$

Long Inverse Time (LT) IEC characteristic

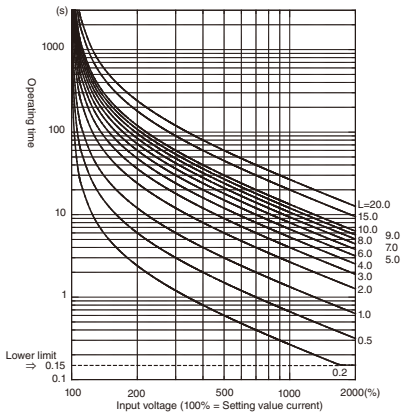

Note: The time setting (lever) is in steps of 10%.
(Lower limit: OC/51G and 0.2; Upper limit: OC is 20; 51G is 50)
Part of the lever is omitted in the above characteristic diagram.

$$t = \frac{120}{I-1} \times \frac{L}{10} \text{ (L: Time factor)}$$

Extremely Inverse Time (EI) IEC characteristic

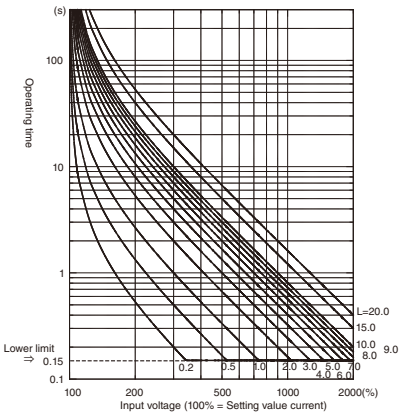

Note: The time setting (lever) is in steps of 10%.
(Lower limit: OC/51G and 0.2; Upper limit: OC is 20; 51G is 50)
Part of the lever is omitted in the above characteristic diagram.

$$t = \frac{80}{I^2-1} \times \frac{L}{10} \text{ (L: Time factor)}$$

I²t characteristic

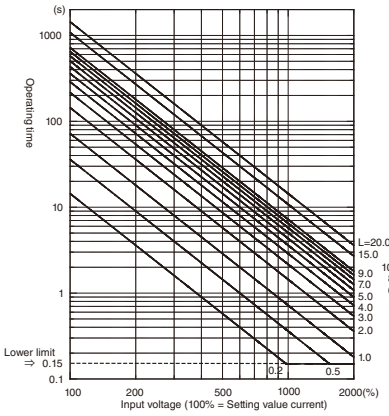

Note: The time setting (lever) is in steps of 10%.
(Lower limit: 0.2; Upper limit: 20) Part of the lever is omitted in the above characteristic diagram.

$$t = \frac{720}{I^2} \times \frac{L}{10} \text{ (L: Time factor)}$$

Moderate recoil time (MI) IEEE characteristic

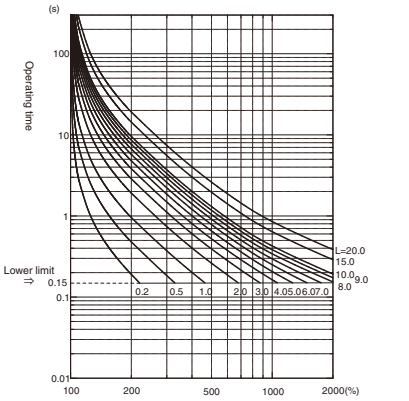

Note: The time setting (lever) is in steps of 10%.
(Lower limit: OC/51G and 0.2; Upper limit: OC is 20; 51G is 50)
Part of the lever is omitted in the above characteristic diagram.

$$t = \left\{\frac{0.0515}{I^{0.02}-1.0} + 0.1140\right\} \times \frac{L}{10} \text{ (L: Time factor)}$$

Extremely Inverse Time (EI) IEEE characteristic

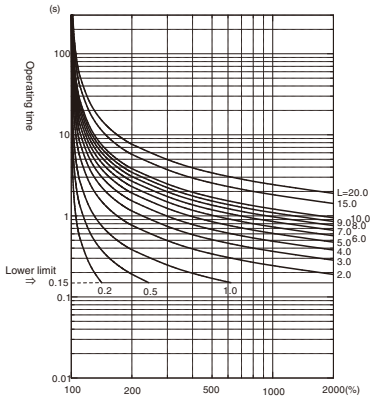

Note: The time setting (lever) is in steps of 10%.
(Lower limit: OC/51G and 0.2; Upper limit: OC is 20; 51G is 50)
Part of the lever is omitted in the above characteristic diagram.

$$t = \left\{\frac{28.2}{I^2-1.0} + 0.1217\right\} \times \frac{L}{10} \text{ (L: Time factor)}$$

Very Inverse Time (VI) IEEE characteristic

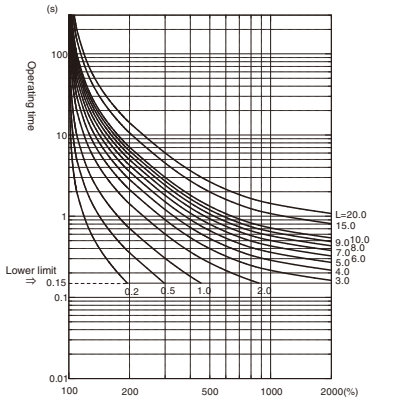

Note: The time setting (lever) is in steps of 10%.
(Lower limit: OC/51G and 0.2; Upper limit: OC is 20; 51G is 50)
Part of the lever is omitted in the above characteristic diagram.

$$t = \left\{\frac{119.61}{I^2-1.0} + 0.491\right\} \times \frac{L}{10} \text{ (L: Time factor)}$$

Power Monitoring Equipment
Multiple function protectors and controllers F-MPC60B

Discontinued 2020

■ Features

- **Compact and lightweight**
  Compact unit that integrates protection, operation, measurement, monitoring, transducer output and transmission functions.
- **High-voltage power receiving (ZVT and EVT compatible)**
  Compatible with high-voltage power receiving ZVT and EVT.
- **Flexibly responds to circuit changes**
  Makes it easy to change settings such as CT ratios through its intuitive operation.
  CT primary current: 5 A to 7500 A
  VT primary voltage: 210 V to 110 kV
- **Network system**
  Makes it easy to build information network systems that connect with upper-level computers via RS-485 (F-MPC-Net, Modbus RTU), T-Link or 4-20 mA output.
- **Prevention of erroneous cutoff**
  Erroneous cutoff is prevented, even in the event of part failure, via a duplicated CPU and analog circuit and AND output processing.
- **Self-monitoring function**
  It constantly monitors the internal operating state so that it can respond quickly in the event of failure.

KKD10-119

UM43FG-E5AK

- **Improved maintainability**
  Facilitates preventive maintenance through circuit breaker monitoring and supports accident analysis through accident measurement.
- **Simplifies overcurrent relay and protective coordination**

■ Type number nomenclature

UM43 F G - E 5 A K

Basic type
UM43: F-MPC60B series
(3ø3W/3ø4W use)

Type of unit
F: Receiving unit

Ground fault protection
G: 50G/51G (resister grounding)

External interface
A: "4-20mA output" and "RS-485 interface"

CT secondary current
5: 5A

Control power supply
E: 100V AC/DC common use

■ Specifications

• General specifications

Type		**UM43FG-E5AK**
Control power supply		100V DC (80 to 143V)/ 100V AC (85 to 132V) common use
Control power consumption		Max. 15W
Power consumption of CT, VT		Max. 1.0VA
Rated current (CT secondary current)		5A AC ("1A AC" model is also available (non-standard).)
Rated voltage	Line voltage	Select "110V AC" or " 110×$\sqrt{3}$ AC" (VT secondary voltage)
	Phase voltage	Select "110V /$\sqrt{3}$ AC" or "110V AC" (VT secondary voltage)
Zero-phase current		5A AC
Insulation resistance		10MΩ (min.) between ground and electric circuits connected together
Vibration resistance		16.7Hz 1.96m/s^2, 0.4mm double amplitude, 10 minutes each in X, Y, and Z directions
Shock resistance		300m/s^2, three times each in X, Y, and Z directions
Withstand voltage		2kV AC 1 minute between ground and electric circuits connected together, excluding, RS-485 signal, MN signal, and kWh-pulse output signal cables
Noise resistance		JEC2500 (conforming to ANSI), square wave, 1.5kV, 1ns/1μs, for 10 minutes.
Overload resistance		CT circuit: at ratting 40times, a second, 2 times VT circuit: at ratting 1.25 times, 10 second
Lightning impulse noise resistance		5.0kV (between ground and electrical circuits connected together)
Dropout tolerance		20ms (Operation continues, however, display goes out.)
Electrostatic discharge		Contact discharge: ±8kV Aerial discharge: ±15kV
Ambient temperature		Operating: -10 to + 60°C (operation guaranteed) 0 to + 40°C (characteristics guaranteed) (no icing) *1 Storage: - 25 to + 70°C (no icing)
Humidity		20 to 90% RH (no condensation)
Atmosphere		No corrosive gas and no heavy dirt and dust.
Grounding		Class D grounding (100Ω or less)
Applicable standard		JEC2500 (Protective relays for electric power systems), JEC-2510 (Overcurrent relays), JEC-2511 (Voltage relays), JIS C4602 (Overcurrent relays for 6.6kV receiving), JIS C1102-1 to -9 (Direct acting analogue electrical instrument and their accessories), IEC255-3 (1989), -5, -6
Mass		1.4kg

*1: The operation guaranteed temperature is a temperature at which operation is guaranteed within two times of the guaranteed accuracy value at JEC characteristics guaranteed temperature, or within the accuracy of influence of JIS temperature.

Fuji Electric FA Components & Systems Co., Ltd.
Information subject to change without notice

■ Specifications

• Input/output specifications

Input circuit		Applicable to both 100V DC (max. 143V) and 100V AC (max. 132V) Pick up voltage: 40 to 70V DC/40 to 70V AC
Output circuit	Circuit breaker ON/OFF/trip	Making current: 15A (110V DC), allowable continuous current: 4A
	Other than above	Making/breaking current: 0.2A (110V DC, inductive load L/R = 15ms or less), allowable continuous current: 1A

• Measurement and display specifications

	Effective measuring and display range	Accuracy *2
Current/Demand current/ Max. demand current	0, 0.8% to CT rating to 8 × CT rating *1	±1.5% (0, 0.8 to 100%), ±5% (100 to 800%)
Zero-phase current/Max. zero-phase current	CT: 0, 2% to CT rating to 8 × CT rating	±1.5%: 0, 2% to CT rating, ±5%: others
Active power Demmand active power/ Reactive power	±0.004 to ±1kW at VT secondary circuit (The value is converted into the VT rated voltage	±1.5% : 0, ±0.004 to ±1kW See the figure below.
Power factor	Lead 0% - 100% - Lag 0%	±5% (Lagging: no sign, leading: - sign) See the figure below.
Active electric energy *3 Reactive electric energy	0 to 99999, multiplying factor: 1, 10, 100, 1000	Equivalent to ordinary instruments shown in Table 4 specified in JIS C 1216 (instrument with a transformer)
Line voltage	9.5 to 260V on VT secondary side	±1.5%
Phase voltage	5.5 to 150V on VT secondary side	±1.5%
Frequency	45 to 55Hz (50Hz), 55 to 65Hz (60Hz)	±0.5%
Max. demand value	Same as the above range	–
Harmonics current	3rd, 5th, 7th, overall harmonics	–

*1 The fault current up to 2000% (accuracy: ±5%) can be displayed.
*2 "0, a to n%" means that "0" is indicated if a value is less than a%.
*3 There are two indications in the electric energy indication; total electric energy indication (zero clear disable) and periodic electric energy indication (zero clear is enable).

D1

The sign "±" in electric measuring

The sign "±" is used to display "LEAD/LAG" in power-factor. measuring and "electric power selling/purchase" in electric power measuring. No signs are used if a value is "+". The sign "±" has the following meanings depending on the measured items.

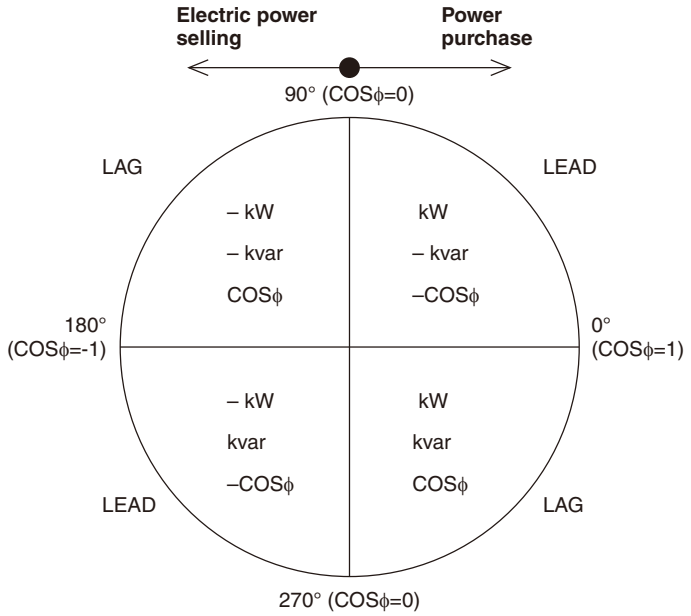

- Active power: kW
  +: Power purchase (Consumed electric power)
  –: Electric power selling (Inverse electric power flow)
- Reactive power: kvar
  +: Lagging current by reactive volt-ampere meter method
  –: Leading current by reactive volt-ampere meter method
  * "LEAD/LAG" reverses with electric power selling/purchase.
- Power factor: COSϕ
  +:LAG –: LEAD

Power Monitoring Equipment
Multiple function protectors and controllers F-MPC60B

Discontinued 2020

■ Specifications

• History data

Item	Display range	Display code
50 (INST) operation count	0 to 9999	H0
51DT1 operation count	0 to 9999	H1
51 (OC) operation count	0 to 9999	H2
51G operation count	0 to 9999	H3
50G operation count	0 to 9999	H4
59 (OV) operation count	0 to 9999	H6
27 (UV) operation count	0 to 9999	H7

Item	Display range	Display code
46 operation count	0 to 9999	H9
47 operation count	0 to 9999	HA
OCA operation count	0 to 9999	Hb
Running time	0 to 9999 ×100 (h)	Hc
ON/OFF operation	0 to 9999 ×10 (times)	Hd
OCGA operation count	0 to 9999	Hn
51DT2 operation count	0 to 9999	HP

* Other history display: Fault value display (on occurrence of a fault), history maximum values of zero-phase current/voltage, maximum demand value (A, W), and minimum instantaneous voltage

* The display codes are the codes to be displayed on this F-MPC60B (UM43FG-E5AK).

• Specifications of protective relays

Item	Setting range of current/ voltage operate value	Setting range of operate time (timer)	Characteristics	
			Operate value	Operate time
50 (Instantaneous)	1 to 20 times of CT rated current (in 0.2 times step), Lock	Fixed	±5%	40ms or less
51DT1 (Definite time)	1 to 20 times of CT rated current (in 0.2 times step), Lock	0 to 5s (in 0.05 step)	±5%	Less than 1s ±50ms More than 1s ±5%
51DT2 (Definte time)	20 to 240% of CT rated current (2% step), Lock	0 to 10s (0.1s step)	±5%	Less than 1s ±50ms More than 1s ±5%
51 (Inverse time) SI, EI, VI, LT, I^2t	20 to 240% of CT rated current (2% step), Lock	Time multiplication: 0.5 to 20 times, (in 0.1 times step) (Minimum operation time: 150ms)	±5%	Setting = 300%: ±12% 500, 1000%: ±7% (lower limit ± 100ms)
50G, 50N (Instantaneous/definite time)	0.2 to 8 times of CT rated current (in 0.1 times step), Lock	0.0 to 10s to 180s *1	±5%	±5% (lower limit ±50ms)
51G , 51N SI, EI, VI, LT	0.02 to 1.00 times of CT rated current (in 0.01 times step), Lock	Time multiplication: 0.5 to 20 times (in 0.1 times step) (Minimum operation time: 150ms) *1	±5% (min. ± 100mA)	Setting = 300%: ±12% 500, 1000%: ±7% (lower limit ± 100ms)
59V (0V)	VT secondary voltage: 60 to 150V (1V step), lock	0.0 to 5.0s to 60s (in 0.5s step) (in 1s step)	±5%	±5% (min. ±50ms)
27V (UV)	VT secondary voltage: 10 to 100V (1V step), lock	0.0 to 5.0s to 60s (in 0.5s step) (in 1s step)	±5%	±5% (min. ±35ms)
46 (Open-phase)	–	–	Unbalanced rate 50 - 80%	2s (fined)
47 (Phase sequence relay)	–	–	–	0.5s on less
OCA (Overcurrent pre-alarm)	10 to 100% of CT rated current (in 5% step), Lock	10 to 200s (in 10s step)	±10%	±5%
OCGA (Leakage current pre-alarm)	50, 60, 70, 80% of the setting value of "51G operating current", Lock	10 to 200s (in 10s step)	±10% (min±200mA)	±5%

*1 When a current exceeds 15% of the rated fundamental wave current, the malfunction preventive function against the exciting inrush current activates. (When the contents of the second higher harmonics are about 15% or higher, the feature will lock outputs.) Note that with the 50G relay, the malfunction preventive function against the exciting inrush current will not activate if you set the operate time at 0s.

■ Specifications

• Communications specifications

Protocol	MODBUS protocol mode	MPC-Net mode
Standard	EIA-485	EIA-485
Data exchange method	polling/selecting system	1: N polling/selecting system
Transmission distance	1000m (total length)	1000m (total length)
No. of connectable units	Up to 32 units (including master unit)	Up to 32 units (including master unit)
Station number address	01 to 99	01 to 99
Transmission speed	4800/9600/19200 bps (selectable)	4800/9600/19200 bps (selectable)
Data format	Number of start bits: 1 (fixed) Data length: 8 bits (fixed) Parity bit: None/even/odd (selectable) Stop bits: 1 bit or 2 bit (automatic selection) 1 bit: for "even or odd" parity 2 bit: for "none" parity	Number of start bits: 1 (fixed) Data length: 7/8 bits (selectable) Parity bit: None/even/odd (selectable) Stop bits: 1 (fixed) BCC= Even horizontal parity

• Specifications of transducer outputs

Transducer output signal		4 to 20mA DC (external load resistance: 270Ω or less)	
Signal type	Current (Ia, Ib, Ic)	4 to 20mA for 0 to CT rated current	Accuracy ±1.5%
	Line voltage (Vab, Vbc, Vca)	For VT secondary 0 to150V, 4 to 20mA *1 0 to 150V ×√3, 4 to 20mA *2	
	Phose voltage (Van, Vbn, Vcn)	For VT secondary 0 to 150V/√3, 4 to 20mA *1 0 to150V, 4 to 20mA *2	
	Active power (W)	For 0 to 1kW (CT5A, VT110V AC conversion), 4 to 20mA	
	Reactive power (var)	For –1 to 0 to1kvar (CT5A, VT110V AC conversion), 4 to 12 to 20mA	
	Frequency (Hz)	For 45 to 55Hz or 55 to 65Hz, 4 to 20mA	
	Power factor	For LEAD 0.5 to 1 to 0.5 LAG, 4 to 12 to 20mA	

Note: • Output signals are connected to a common terminal (minus side).
• An upper or lower limiter operates when the output signal is about to exceed the upper or lower limit.
The upper limit is fixed at 20mA, and the lower limit is fixed at 20mA.
*1: Applied line voltage: 100V/110V/120V AC.
*2: Applied line voltage: 100V/110V/120V AC ×√3, AC.

• Specifications of kWh pulse output

Type of output	Transistor, open collector
Ratings	Max. 150V DC, 100mA
Pulse width	200 ± 20ms
Pulse rate	10^n kWh per pulse (n=-2 to 4) (integer), or 2000 pulses per kWh

Power Monitoring Equipment
Multiple function protectors and controllers F-MPC60B

Discontinued 2020

■ Indications & Settings

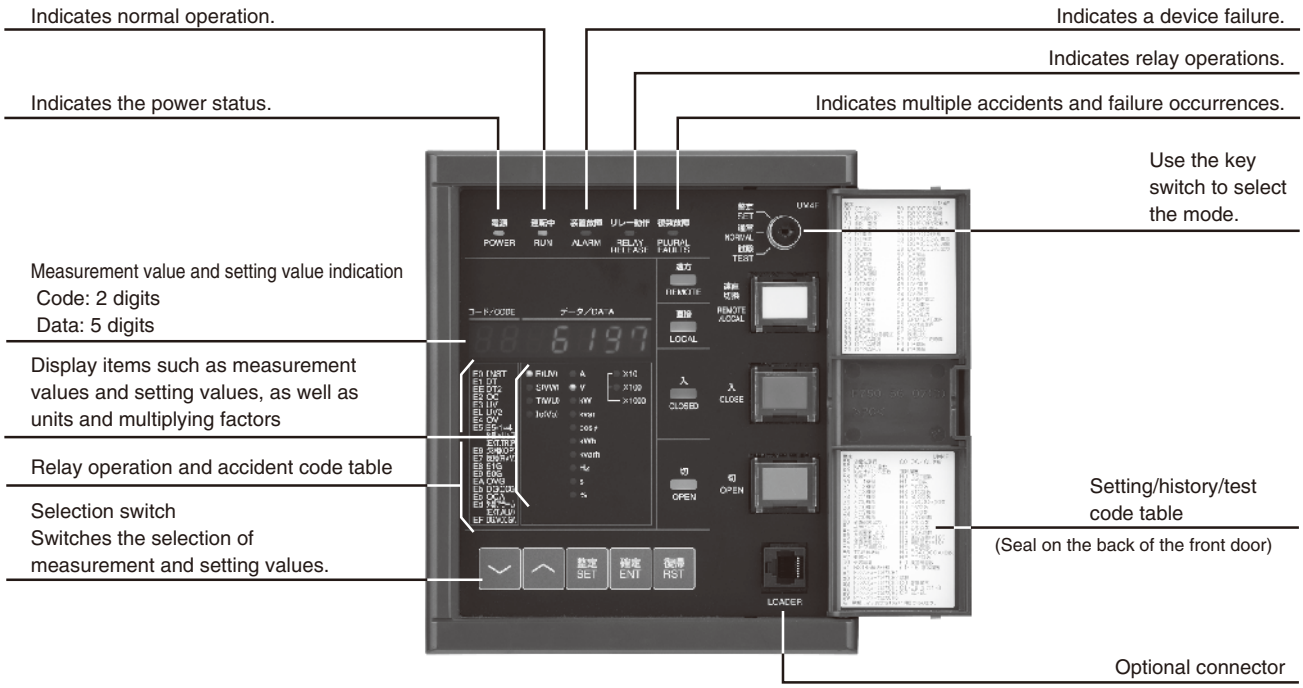

D1

■ Example of etxternal wiring diagrams

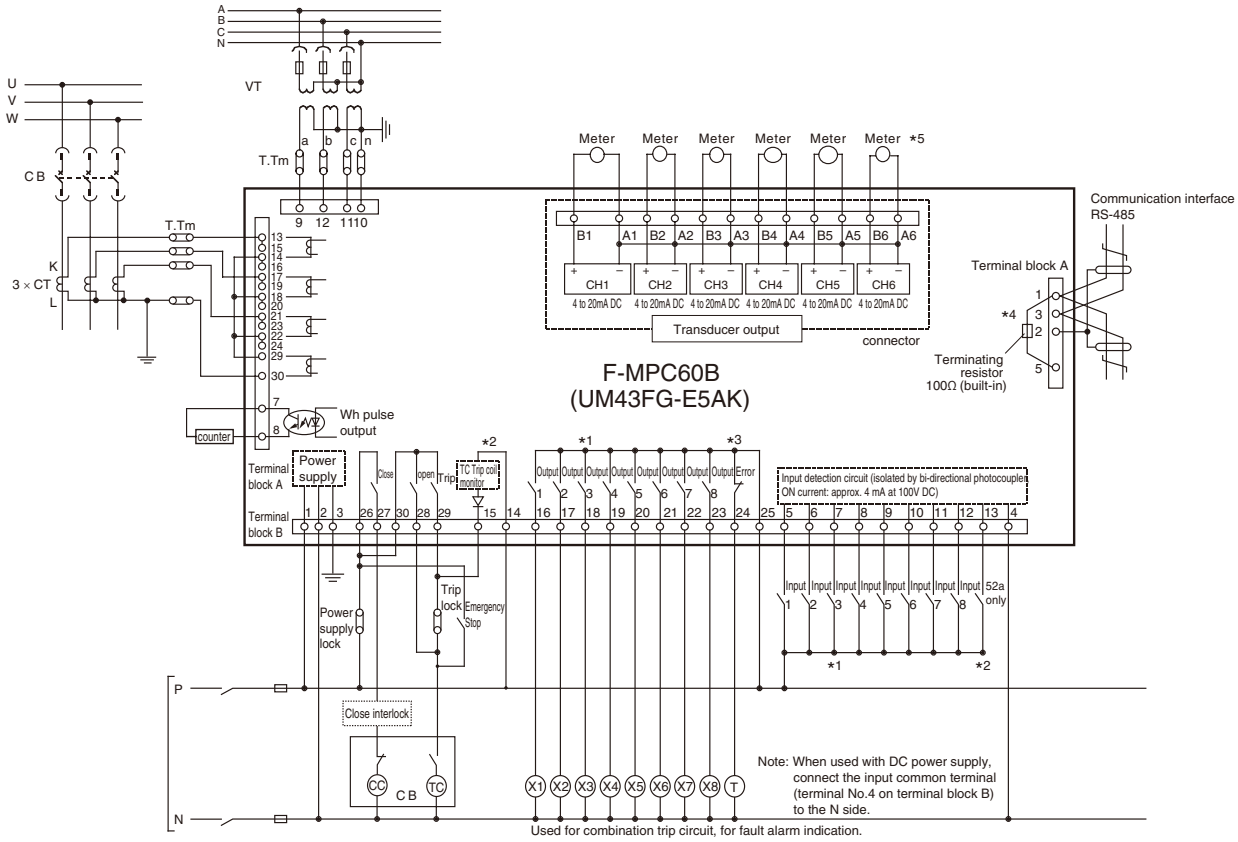

Note: *1 Use selective input 1 to 8 and selective output 1 to 8 by selecting the function type by setup.
*2 Outputs of “ON, OFF, TRIP and equipment error” are used exclusively. Inputs of "52a: the answer back signal of CB ON" and "the monitoring of TC coil" are used exclusively.
*3 Equipment error output is a normally closed contact (normally excited, and if an error occurs, excitation terminates and contact opens). Therefore, a time delay of about 100ms occurs before the contact opens, since the power has been on (in operation). Consider the use of a timer, if necessary, if you create an external sequence.
*4 If this unit, being provided with RS-485 communication function, is located at the termination of a communication line, connect terminals No.3 and 5. With this, the 100Ω terminating resistor is connected across the RS-485 bus.
*5 Use twisted wires (cables) as the output cable of transducer.
- If you have to connect a heavy load exceeding relay's contact rating, be sure to use it in combination with FUJI's miniature power relay HH6 □ .
See page D1-213 “Input/output specifications.”

■ Time-current characteristic

Standard inverse (SI) characteristics

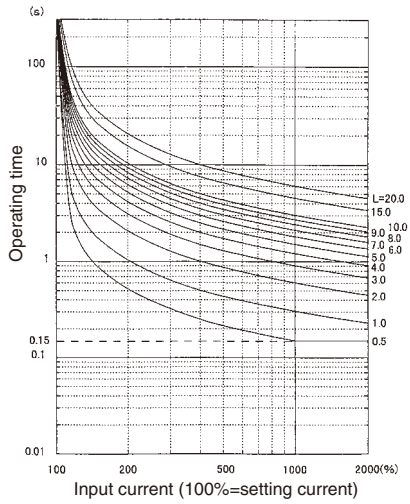

Note:
Time setting (lever) is of 0.1 times step (Lower limit: 0.5, upper limit: 20.0). Indication of a part of the lever is omitted in the characteristics indicated above.

$$t = \frac{0.14}{I^{0.02} - 1} \times \frac{L}{10}$$ (L: time magnification)

Very inverse (VI) characteristics

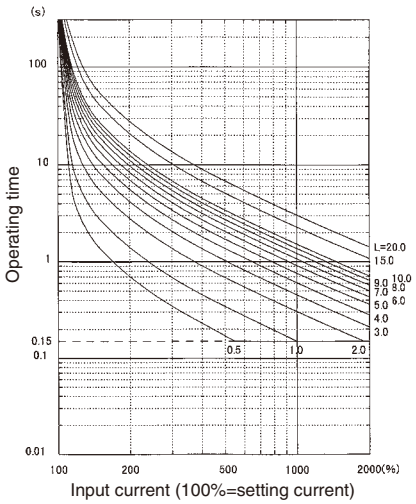

Note:
Time setting (lever) is of 0.1 times step (Lower limit: 0.5, upper limit: 20.0). Indication of a part of the lever is omitted in the characteristics indicated above.

$$t = \frac{13.5}{I - 1} \times \frac{L}{10}$$ (L: time magnification)

Very inverse (LT) characteristics

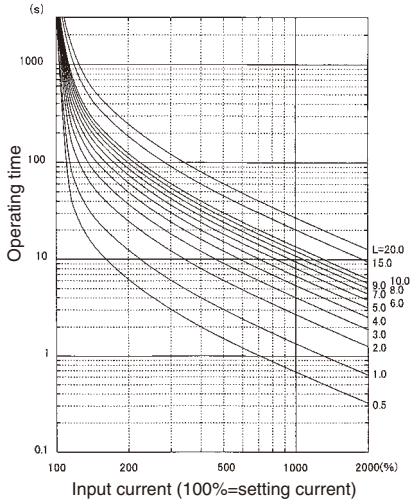

Note:
Time setting (lever) is of 0.1 times step (Lower limit: 0.5, upper limit: 20.0). Indication of a part of the lever is omitted in the characteristics indicated above.

$$t = \frac{120}{I - 1} \times \frac{L}{10}$$ (L: time magnification)

Exremely inverse (EI) characteristics

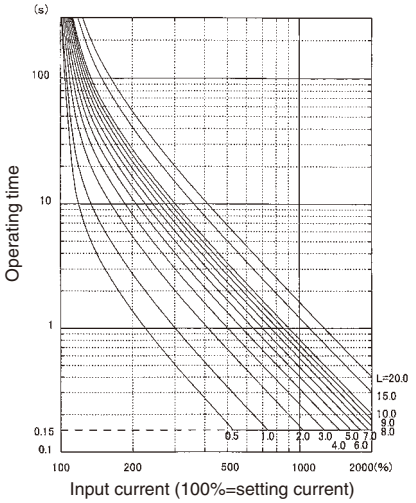

Note:
Time setting (lever) is of 0.1 times step (Lower limit: 0.5, upper limit: 20.0). Indication of a part of the lever is omitted in the characteristics indicated above.

$$t = \frac{80}{I^2 - 1} \times \frac{L}{10}$$ (L: time magnification)

I^2t characteristics

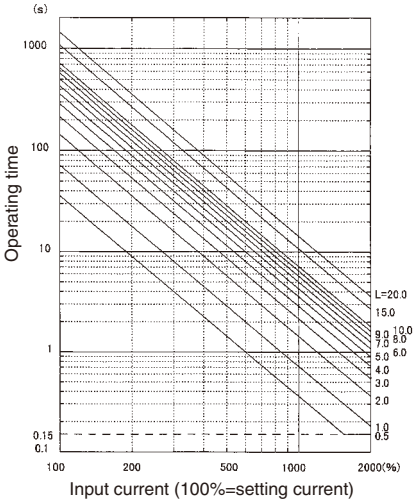

Note:
Time setting (lever) is of 0.1 times step (Lower limit: 0.5, upper limit: 20.0). Indication of a part of the lever is omitted in the characteristics indicated above.

$$t = \frac{720}{I^2} \times \frac{L}{10}$$ (L: time magnification)

Power Monitoring Equipment
Multiple function protectors and controllers F-MPC60B

Discontinued 2020

■ Dimensions, mm

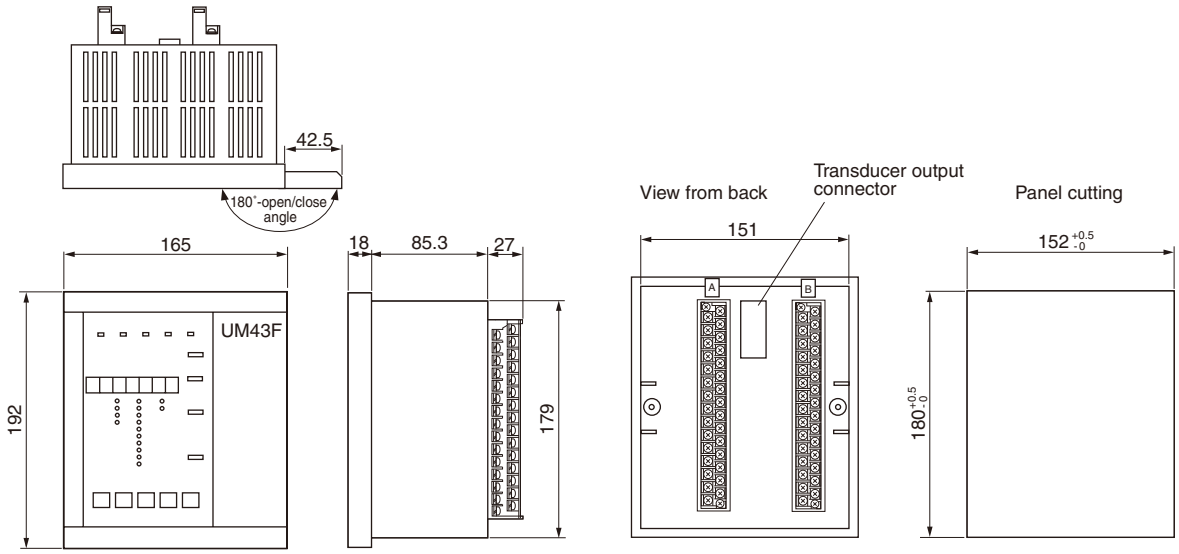

Minimum clearance from adjacent upper and lower devices or panel plate: 100mm

■ Characteristics of overcurrent relay (OCR)

The characteristics of overcurrent relays (OCR) are, in general, divided into the protective INST (50) (setting code 10, 11), the protective DT1 (setting code 12 to 14), protective DT2 (setting code 1c, 1d, 1E) and the protective OC 51 (setting code 15 to18). The characteristics of protective OC 51 consist of 5 kinds of inverse characteristic curves, such as standard inverse (SI) characteristics, very inverse (VI) characteristics, long time inverse (LT) characteristics, extremely inverse (EI) characteristics and I^2t characteristics). Combination of the protective INST (50), protective DT1, protective DT2 and OC 51 carries out coordinative protection.

Outline of characteristic of overcurrent relay

Item	Operating current	Operating time
Protective INST (50)	1 to 20 times of CT rated current 5A (0.2 times step)	Fixed (40ms or less)
Protective DT1		0 to 5s (0.05s step)
Protective DT2	20 to 240% of CT rated current 5A	0 to 10s (0.1s step)
Protective OC (51)	(2% step) *1	Select from 5 characteristic curves. Time magnification: 0.5 to 20 times (0.1 times step)

*1: The operating time of protective OC51 is saturated at about 150ms.
The operating time will be saturated at 20 times of CT rated current when the setting exceeds 200%.
For example, the operating time becomes 833% (= 2000%/(240%×100)) of the CT rated current in 240% setting.

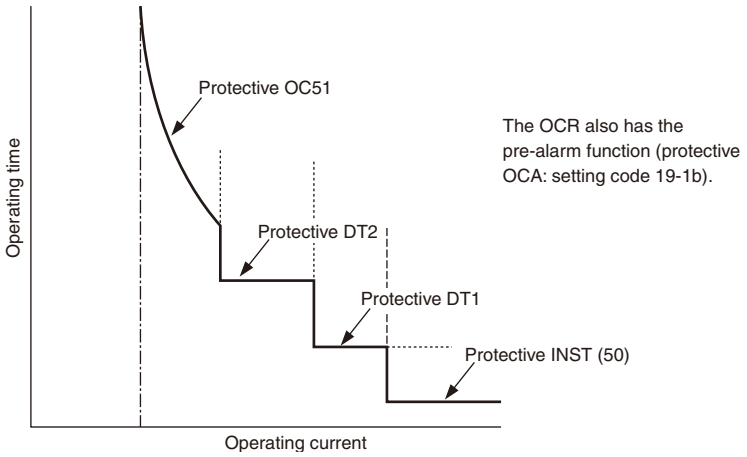

Multiple function protectors and controllers F-MPC30 series, UM5ACG-H5R

■ Description

The F-MPC30 series is a multiple function protectors and controllers in the power monitoring equipment, which integrates protective, measurement, and transfer functions for power feeder facilities. Versatile functions such as preventive maintenance and history data and abnormal value recording can be achieved with excellent economy and reliability. These works have been very complicated as you must have used individual power monitoring devices in combination.

UM5ACG-H5R

KK02-042

■ Features

Economical system configuration
Includes measurement and protective functions limited to the current ranges most frequently used, thus allowing the construction of economical systems.

Improved operating reliability
Includes an automatic monitor function, an automatic diagnostic function supported by continuous monitoring and automatic inspection, and a fail-safe function, thus ensuring high operating reliability while minimizing daily and regular inspection tasks.

Easily designed coordination protection
Provided with 51DT1 and 51DT2 definite time trip characteristics that simplify the designing of coordination protection between overcurrent relays.

RS-485 communications interface
Two protocol types are available:
MPC-Net protocol and MODBUS protocol.

■ Type number nomenclature

UM5AC G - H 5 R

Basic type
UM5AC: F-MPC30 series
Feeder unit
(3ø3W/3ø4W use)

Ground fault protection
G: 50G/51G (rated current: 5A)

Control power supply
H: 100/200V DC

CT secondary current
5: 5A

External interface
R: RS-485 communications interface

Power Monitoring Equipment
Multiple function protectors and controllers F-MPC30

■ Specifications

• General specifications

Type	**UM5ACG-H5R**
Control power supply	100/200V DC (80 to 286V DC) 100V AC (85 to 132V) common use
Control power consumption	Max. 15W (100/200V DC), Max 25 VA (100V AC)
Power consumption of CT, VT	Max. 1.0VA
Rated current (CT secondary current)	5A AC ("1A model" is also available (non-standard))
Zero-phase current	5A AC
Insulation resistance	10MΩmin. between ground and electric circuits connected together
Vibration resistance	16.7Hz, 0.4mm double amplitude, 1.96m/s^2, 10 minutes each in X, Y, and Z directions
Shock resistance	300m/s^2, three times each in X, Y, and Z directions
Withstand voltage	2kV AC 1 minute between ground and electric circuits connected together, excluding RS-485 signal lines
Noise resistance	JEC 2500 (conforming to ANSI), square wave, 1.5kV, 1ns/1μs, for 10 minutes
Overload resistance	CT circuit: at rating 40 times, a second, 2 times
Lightning impulse noise resistance	4.5kV (between ground and electrical circuits connected together)
Dropout tolerance	20ms (Operation continues, however, display goes out.)
Electrostatic discharge	Contact discharge: ±8kV, Aerial discharge: ±15kV
Ambient temperature	–10 to +60°C (operation guaranteed), 0 to +40°C (characteristic guaranteed) (no icing) *1
Storage temperature	–25 to +70°C (no icing)
Humidity	20 to 90%RH (no condensation)
Atmosphere	No corrosive gas and no heavy dirt and dust.
Grounding	Class D grounding (100Ω or less)
Applicable standard	JEC2500 (Protective relays for electric power systems), JEC-2510 (Overcurrent relays), JIS C4602 (Overcurrent relays for 6.6kV receiving), JIS C1102-1 to -9 (Direct acting analogue electrical instrument and their accessories), IEC255-3 (1989) -5, -6.
Mass	1.4kg

*1: The operation guaranteed temperature is a temperature at which operation is guaranteed within two times of the guaranteed accuracy value at JEC characteristics guaranteed temperature, or within the accuracy of influence of JIS temperature.

• Input/output specifications

Input circuit		100/200V DC (286V DC or less) common use Pick-up voltage: 40 to 70V DC (Input current; 1.2mA at 100V DC, 2.4mA at 200V DC)
Output circuit	Circuit trip	The closing current: 15A (110V DC), 10A (220V DC), the allowable continuous conduction current: 4A
	Other than above	The switching current: 0.2A (110V DC, inductive load L/R = 15ms or less) The allowable continuous conduction current: 1A
		The making current: 0.1A (220V DC, inductive load L/R = 15ms or less) The allowable continuous conduction current: 1A

• Measurement and display specifications

	Effective measuring and display range	Accuracy *2
Current	0, 0.8% to CT rating to 8 × CT rating *1	±1.5% (0, 0.8 to 100%), ±5% (100 to 800%)
Zero-phase current	CT: 0, 2% to CT rating to 8 × CT rating	±1.5% (0, 2% to CT rating), ±5% (more than CT rating)

*1 The fault current up to 2000% (accuracy: ±5%) can be displayed.
*2 "0, a to n%" means that "0" is indicated if a value is less than a%.

• History data and display ranges

Item	Display range	Display code
50 (INST) operation count	0 to 9999	H0
51DT1 operation count	0 to 9999	H1
51 (OC) operation count	0 to 9999	H2
51G operation count	0 to 9999	H3
50G operation count	0 to 9999	H4

* Other history display: Fault value display (on occurrence of a fault), history maximum values of zero-phase current/voltage, maximum demand value (A, W), and minimum instantaneous voltage

Item	Display range	Display code
OCA operation count	0 to 9999	Hb
Running time	0 to 9999 × 100 (h)	Hc
Close operation count	0 to 9999 × 10 (times)	Hd
OCGA operation count	0 to 9999	Hn
51DT2 operation count	0 to 9999	HP

* The display codes are the codes to be displayed on this F-MPC30 (UM5ACG-H5R).

• Specifications of protective relays

	Setting range of current/voltage operatel value	Setting range of operate time (timer)	Characteristics (accuracy)	
			Operate value	Operate time
50 (Instantaneous)	1 to 20 times of CT rated current (in 0.2 times step), Lock	Fixed	±5%	40ms or less
51DT1 (Definite-time)	1 to 20 times of CT rated current (in 0.2 times step), Lock	0 to 5s (in 0.05s step)	±5%	Less than 1s ±50ms More than 1s ±5%
51DT2 (Definite-time)	20 to 240% of CT rated current (in 2% step), Lock	0 to 10s (in 0.1s step)	±5%	Less than 1s ±50ms More than 1s ±5%
51 (Inverse time) SI, EI, VI, LT	20 to 240% of CT rated current (in 2% step), Lock	Time multiplication: 0.5 to 20 times (in 0.1 times step) (Min. operation time: 150ms)	±5%	Setting value 300%: ±12% 500, 1000%: ±7% (lower limit ±100ms)
50G, 50N (Instant/definite time)	0.1 to 8 times of CT rated current (in 0.1 times step), Lock	0.0 to10s to 180s (in 0.1s step.) (in 1s step.) *1 *2	±5%	±5% (lower limit ±50ms)
51G, 51N SI, EI, VI, LT	0.02 to 1.00 times of CT rated current (in 0.01 times step), Lock	Time multiplication: 0.5 to 20 times (in 0.1 times step) (Min. operation time: 150ms)*1	±5% (min. ±100mA)	Setting value 300%: ±12% 500, 1000%: ±7% (lower limit ±100ms)
OCA (Overcurrent pre-alarm)	10 to 100% of CT rated current (in 5% step), Lock	10 to 200s (in 10s step)	±10% (min. ±100mA)	±5%
OCGA (Leakage current pre-alarm)	50, 60, 70, 80% of the setting value of "51G operating current", Lock	10 to 200s (in 10s step)	±10% (min. ±200mA)	±5%

Notes: *1 When a current exceeds 15% of the rated fundamental wave current, the malfunction preventive function against the exciting inrush current activates. (When the contents of the second higher harmonics are about 15% or higher, the feature will lock outputs.) Note that with the 50G relay, the malfunction preventive function against the exciting inrush current will not activate if you set the operate time at 0s.

• Communications specifications

Protocol	MODBUS protocol mode	MPC-Net mode
Standard	EIA-485	EIA-485
Data exchange method	Polling/selecting system	1: N polling/selecting system
Transmission distance	1000m (total length)	1000m (total length)
No. of connectable units	Up to 32 units (including master unit)	Up to 32 units (including master unit)
Station number address	01 to 99	01 to 99
Transmission speed	4800/9600/19200 bps (selectable)	4800/9600/19200 bps (selectable)
Data format	Number of start bits: 1 (fixed) Data length: 8 bits (fixed) Parity bit: None/even/odd (selectable) Stop bits: 1 bit or 2 bit (automatic selection) 1 bit: for "even or odd" parity 2 bit: for "none" parity	Number of start bits: 1 (fixed) Data length: 7/8 bits (selectable) Parity bit: None/even/odd (selectable) Stop bits: 1 (fixed) BCC: Even horizontal parity

Power Monitoring Equipment
Multiple function protectors and controllers F-MPC30

■ Example of external wiring diagram (External 3 CTs)

3-phase, 4-wire system / zero-phase current

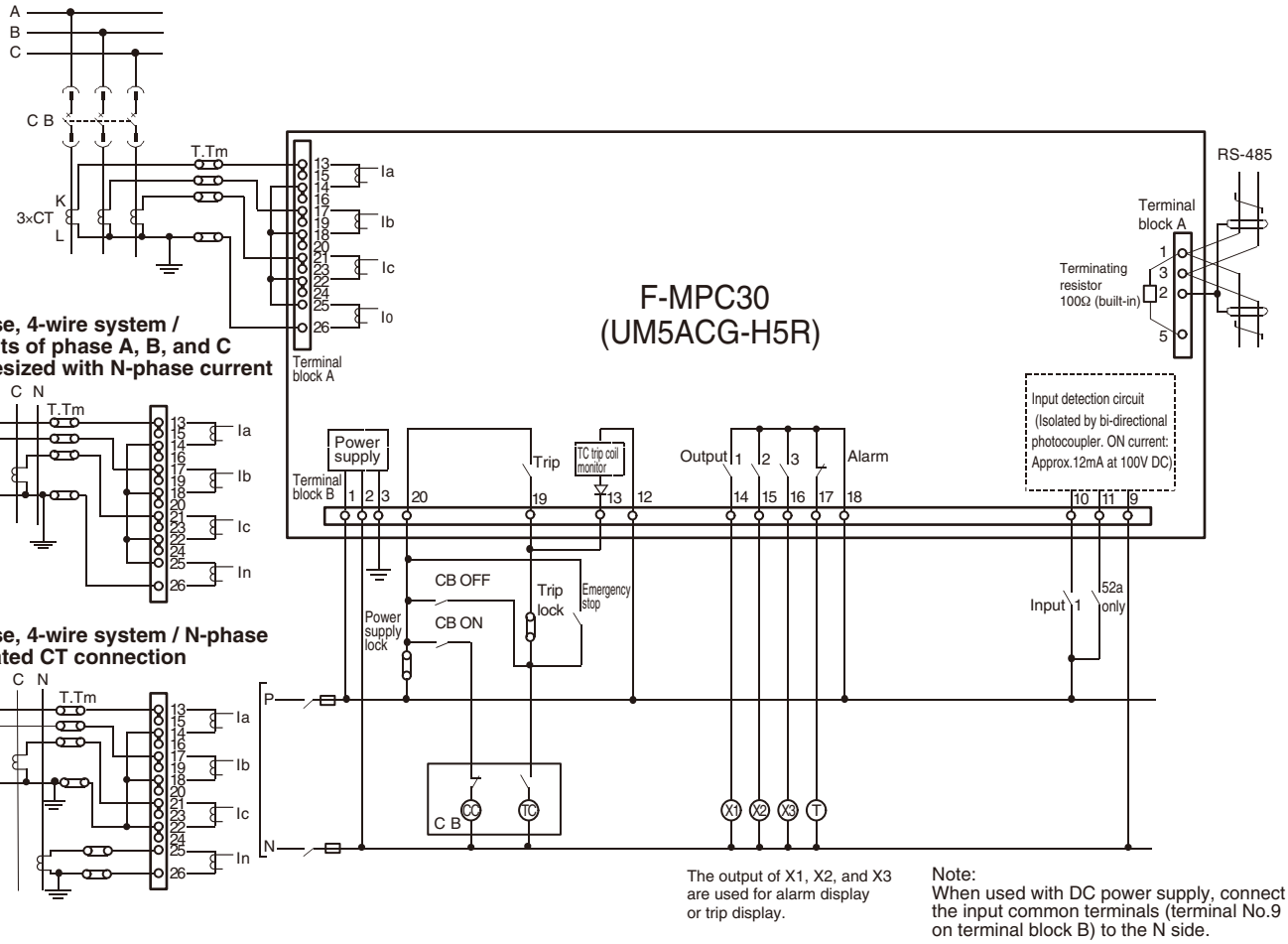

3-phase, 4-wire system / currents of phase A, B, and C synthesized with N-phase current

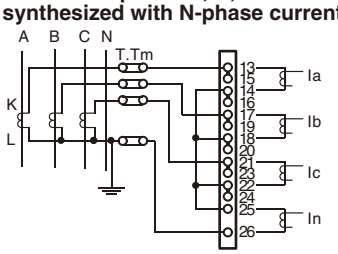

3-phase, 4-wire system / N-phase dedicated CT connection

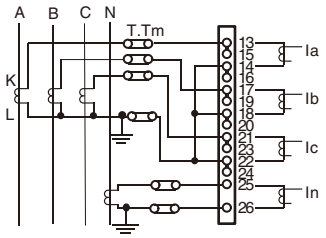

Note:
- Use selective input 1 and selective output 1 to 3 by selecting the function type by setup. *See page D1-220 for details.*
- Outputs of “TRIP and device error” are used exclusively. Inputs of "52a: the answer back signal of CB ON" and "the monitoring of TC coil" are used exclusively.
- Device error output is a normally closed contact (normally excited, and if an error occurs, excitation terminates and contact opens). Therefore, a time delay of about 100ms occurs before the contact opens, since the power has been on (in operation). Consider the use of a timer, if necessary, if you create an external sequence.
- If you have to connect a heavy load exceeding relay's contact rating, be sure to use it in combination with FUJI's miniature power relay HH6 □ .
  See page D1-220 “Input/output specifications.”
- If this unit, being provided with RS-485 communication function, is located at the termination of a communication line, connect terminals No.3 and 5. With this, the 100Ω terminating resistor is connected across the RS-485 bus.

■ Time-current characteristics of an overcurrent relay

Stnadard inverse (SI) characteristics

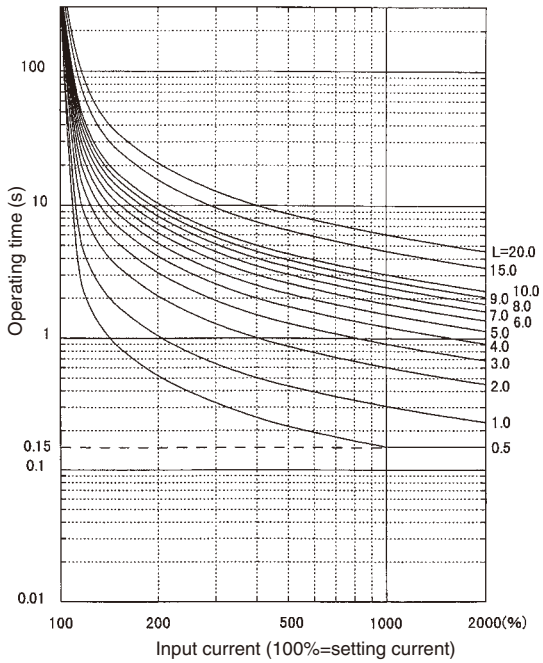

Note:
Time setting (lever) is of 0.1 times step (Lower limit: 0.5, upper limit: 20.0). Indication of a part of the lever is omitted in the characteristics indicated above.

$$t = \frac{0.14}{I^{0.02} - 1} \times \frac{L}{10}$$ (L: Time magnification)

Very inverse (VI) characteristics

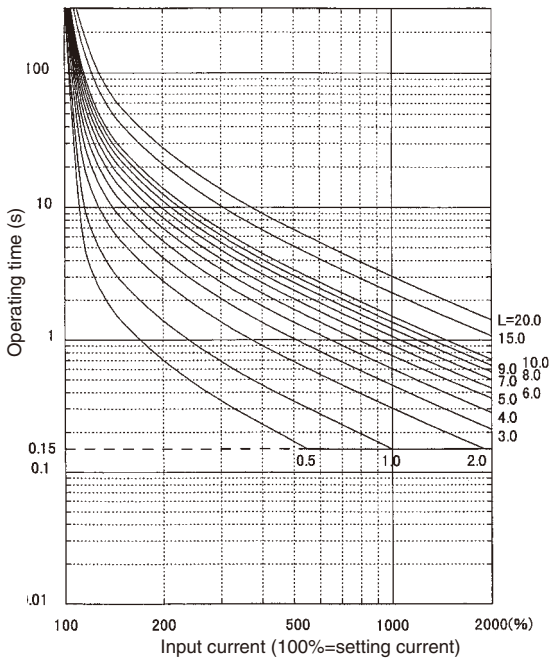

Note:
Time setting (lever) is of 0.1 times step (Lower limit: 0.5, upper limit: 20.0). Indication of a part of the lever is omitted in the characteristics indicated above.

$$t = \frac{13.5}{I - 1} \times \frac{L}{10}$$ (L: Time magnification)

Long time inverse (LT) characteristics

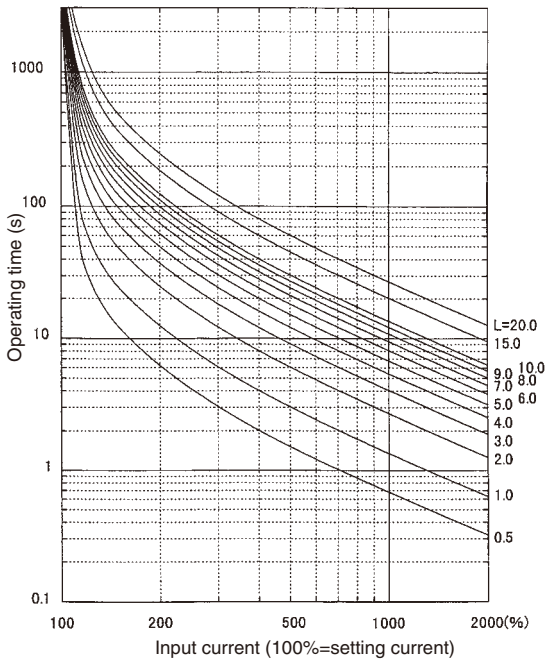

Note:
Time setting (lever) is of 0.1 times step (Lower limit: 0.5, upper limit: 20.0). Indication of a part of the lever is omitted in the characteristics indicated above.

$$t = \frac{120}{I - 1} \times \frac{L}{10}$$ (L: Time maginification)

Extremely inverse (EI) characteristics

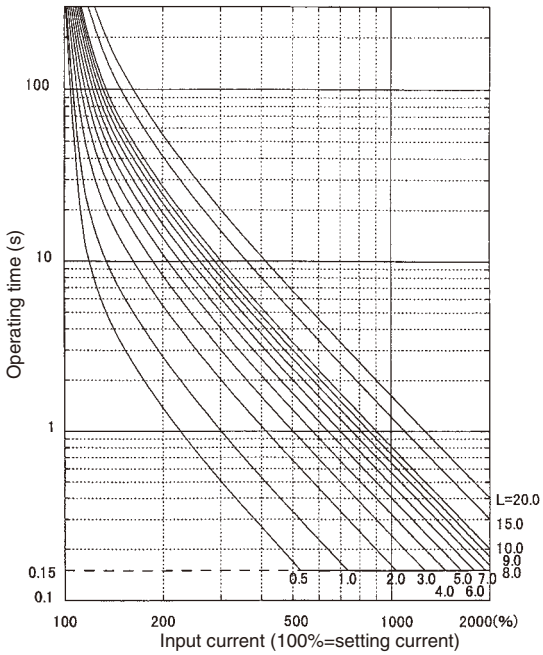

Note:
Time setting (lever) is of 0.1 times step (Lower limit: 0.5, upper limit: 20.0). Indication of a part of the lever is omitted in the characteristics indicated above.

$$t = \frac{80}{I^2 - 1} \times \frac{L}{10}$$ (L: Time maginification)

Power Monitoring Equipment
Multiple function protectors and controllers F-MPC30

■ Dimensions, mm

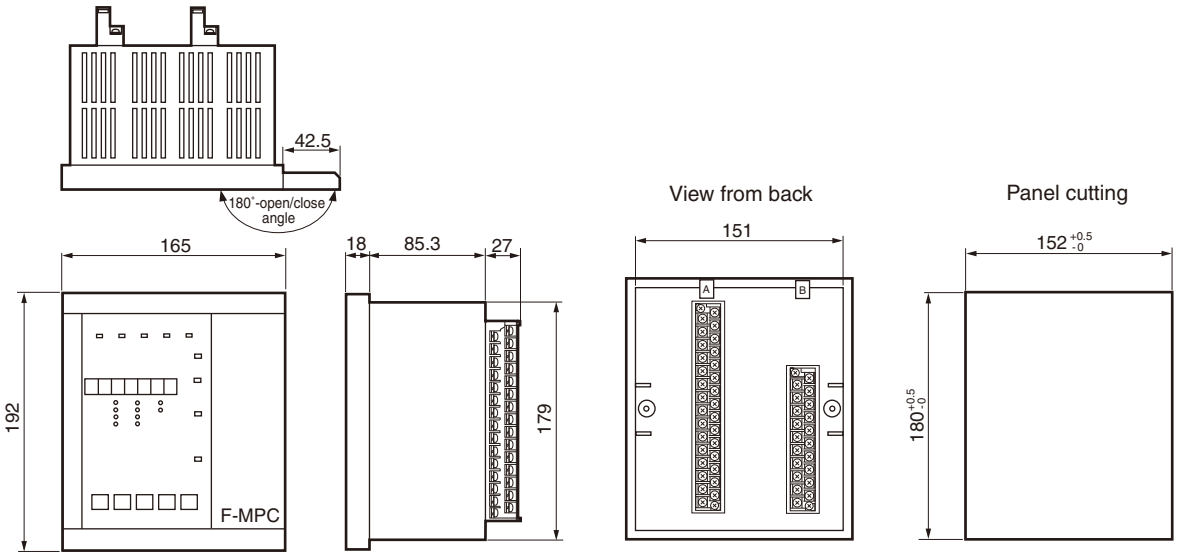

Minimum clearance from adjacent upper and lower devices or panel plate: 100mm

■ Characteristics of overcurrent relay (OCR)

The characteristics of overcurrent relays (OCR) are, in general, divided into the protective INST (50) (setting code 10, 11), the protective DT1 (setting code 12 to 14), protective DT2 (setting code 1c, 1d, 1E) and the protective OC 51 (setting code 15 to18). The characteristics of protective OC 51 consist of 4 kinds of inverse characteristic curves, such as standard inverse (SI) characteristics, very inverse (VI) characteristics, long time inverse (LT) characteristics, extremely inverse (EI) characteristics. Combination of the protective INST (50), protective DT1, protective DT2 and OC 51 carries out coordinative protection.

Outline of characteristic of overcurrent relay.

Item	Operating current	Operating time
Protective INST (50)	1 to 20 times of CT rated current 5A (0.2 times step)	Fixed (40ms or less)
Protective DT1		0 to 5s (0.05s step)
Protective DT2	20 to 240% of CT rated current 5A	0 to 10s (0.1s step)
Protective OC (51)	(2% step) *1	Select from 4 characteristic curves. Time magnification: 0.5 to 20 times (0.1 times step)

*1: The operating time of protective OC 51 is saturated at about 150ms.
The operating time will be saturated at 20 times of CT rated current when the setting exceeds 200%.
For example, the operating time becomes 833% (= 2000%/(240%×100)) of the CT rated current in 240% setting.

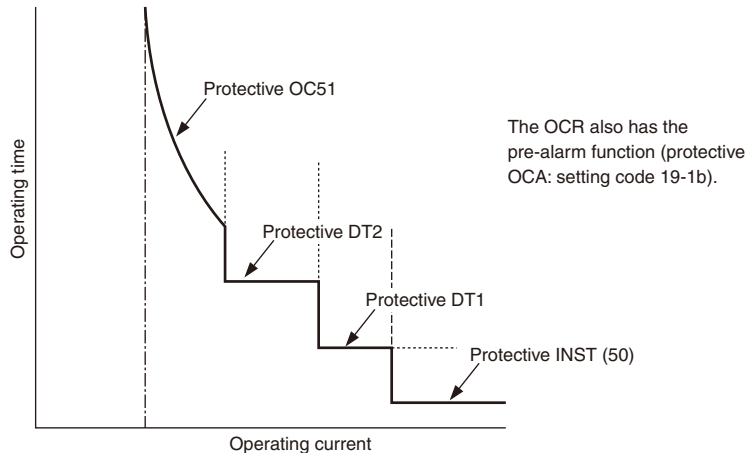

Power Monitoring Equipment
F-MPC Web unit

■ Features

Includes an energy-saving pattern control feature that contributes to customer energy-saving measures.
Easy to connect, easy to set up, easy to monitor, easy to control.
This single unit can connect to anything.

- **Dedicated software not required. Can be easily initialized and configured with a general browser.**
- **Cumbersome device configurations can be completed with just 3 clicks.**
- **Equipped with a control program that supports energy-saving measures, while also enabling energy-saving automated operation.**
- **Comes standard with various interfaces such as Modbus, Ethernet and microSD. Enables data collection and centralized monitoring.**
- **Notifies you of abnormalities via email.**
- **Scheduled for Fall 2018**
  - Equipped with a USB host function that makes it possible to store forms in batch on a USB memory.
    Makes form management easy even in environments without a network connection.
  - Self-declared CE compliance with English language display.

■ Models and Types

Product name	Type
F-MPC Web unit	**UM12-10**

■ Specifications

● General specifications

Item		Specifications
Control power	Rating	100-240 V AC (permissible range: 85-264 V AC) 50/60 Hz (permissible range: 47 to 63 Hz)
	Consumer VA	17 VA or less
	Inrush current	At 110 V AC: 15 A or less; At 220 V AC: 30 A or less
Isolation resistance		Control power terminal - ground: 10 MΩ or higher; Communication terminals - ground: 10 MΩ or higher; Control power terminal - communication terminal: 5 MΩ or higher (500 V DC megger)
Vibration		10-58 Hz: One-way amplitude 0.075 mm; 58-150 Hz: Constant acceleration 10 m/s²; X, Y, Z: 8 minutes × 10 cycles in each direction
Impact		300 m/s², 11 ms; X, Y, Z: 3 times in each direction
Withstand voltage		Control power terminal - ground: 2,000 V AC for 1 minute; RS-485 terminals - ground: 500 V AC for 1 minute; Control power terminal - RS-485 terminals: 2,000 V AC for 1 minute
Noise resistance		Square wave: Continuous application of 1 ns × 1 μs square wave noise for 10 minutes; Control power circuit: 1.5 kV; Communication (RS-485, Ethernet, USB); Circuit: Clamp 1.0 kV Radiation electromagnetic field (transceiver): 10 V/m; Electrostatic, gap discharge: 8 kV; Contact discharge (housing): 4 kV; Burst control power circuit (control power - ground) 2 kV Communication (RS-485, Ethernet, USB) circuit: Clamp 1 kV; Radiation electromagnetic field immunity: 80-1000 MHz, 10 V/m; Conduction immunity: 0.15-80 MHz Commercial-use external magnetic field: 30 A/m
Lightning impulse withstand voltage		Control power terminal - ground: 2.5 kV (1.2 × 50 μs) Surge: Control power 2 kV, communication line 1 kV, RS-485 terminals - ground 1.0 kV (1.2 × 50 μs), control power terminal - control power terminal 2.5 kV (1.2 × 50 μs)
Operating ambient temperature		-10 to 55 ℃
Storage temperature		-20 to 70 ℃
Relative humidity		20 to 90% RH (no condensation)
Usage atmosphere		No corrosive gas or excessive dust.
Usage altitude		Altitude 2,000 m or less
Permissible instantaneous power failure time		20 ms (at 100 V AC)
Power interruption compensation		Lithium primary battery (RTC backup only)
Installation (overvoltage) category		II (IEC 61010-1)
Pollution degree		2 (IEC 61010-1)
Protective structure		IP20 (IEC 61010-1)
Mounting method		DIN rail or M4 screw (tightening torque up to 1.5 N•m)
Mass		Approx. 240 g (including battery)

*Design life: 10 years or more at an average ambient temperature of 40°C
*Battery replacement life: 5 years (average ambient temperature of 25°C)

● Communication specification

Ethernet

Item		Specifications	Remarks
Standard		10Base-T/100Base-Tx	IEEE802.3
No. of channels		Maximum 2ch	Auto - MDIX compatible
Protocol	Internet	IP	IPv4 support (Factory-default: Ch 1:192.168.0.1, Ch 2:192.168.1.1); Temporary reset by pushing and holding SW1 button for 5 seconds
	Web server	HTTP	Various settings, monitoring data transmission, and remote control
	FTP client	FTP(active/passive)	Function for transmitting collected data to server
	Gateway	TCP	Ethernet - RS-485 (Modbus RTU, F-MPC-Net) communication converter
	NTP client	NTP	Automated set-up for the built-in clock
	Email client	SMTP	Ability to send specified email via internal events (time, triggers) Supported authentication protocols: SMTP AUTH PLAIN, SMTP AUTH LOGIN, SMTP AUTH CRAM-MD5, POP before SMTP (APOP)
	DNS client	DNS	Host name resolution function
	DHCP client	DHCP	Automatic IP allocation function
	Modbus TCP client	Modbus TCP	Modbus TCP server IO memory response read-only
	Loader command client	SX loader command	Loader command IO memory response read-only

Power Monitoring Equipment
F-MPC Web unit

● Communication specification (continued)

RS-485

Item	Specifications	Remarks
Standard	EIA-485	
No. of channels	2ch	Settings such as protocol and baud rate can be configured for each channel
Communication protocol	F-MPC-Net,Modbus RTU	Selection (each channel can be individually set), (factory default is F-MPC-Net)
Communication method	Master/slave system	This unit is a master
Performance	Baud rate/bit length/parity/maximum no. of connections	4800, 9600, 19200, 38400 bps / 7, 8-bit / None, odd, even / 63 units* (factory default is 19200, 7-bit, odd)
Bias resistance	100 kΩ (OFF) / 675 Ω (ON) switch	To comply with Modbus standard (Factory default is OFF 100 kΩ)

*Calculated via 2 units when the unit supports a maximum of 31 connections.

●Screen specification

Item	Sub-item	Contents
Basic settings	Basic settings	User, network, time settings
	Communication settings	Communication port (RS-485, Ethernet) settings
	Download	Settings information download
	Upload	Settings information, software package upload
	Configuration file management	User macro management
	F-MPC Web information	Refer to info on main body
	Breakdown information details	Critical/minor breakdown information
	Version information	Software version information
	Log download	RAS warning log download
	IO/MEM state	I/O information (Factory default: 19200, 7-bit, odd)
Monitoring screen	Monitoring information	Uploading/downloading of various definition files; shutting down and restarting the system
	Usage rating	Rating information and usage for each interval (1-minute, 30-minute, 1-hour, 1-day, 1-month)
	Usage comparison	2-signal comparison graph for each interval (bars/lines)
	Trends	Line graph for each interval (up to 4)
	Yearly, monthly, daily reports	Viewing of yearly, monthly, and daily reports, as well as batch download of forms
	Demand monitoring	Demand monitoring graph
	Alarm logs	Viewing of alarm and output logs, as well as output control
	Measurement values list	Display of collected measurement values list
Collection settings	Automatic settings	Automatic recognition and setting of devices
	Signal settings	Device and signal settings to register
	Inter-item operation settings	Creating new signals by combining signals
	Group settings	Creation of group trees
	Demand settings	Demand monitoring settings and pattern control settings
	Threshold alarm settings	Threshold alarm and bit alarm settings
	Email and FTP settings	Email and FTP forwarding settings

●Storage data specification

Item	Specifications	Remarks
Data points	Up to 1,000 points	1-minute interval data 1 file/day
Daily report (1-minute interval)	With SD card: 3 years or up to 80.0% capacity Without SD card: 3 months or up to 70.2% capacity	30-minute interval data 1 file/day
Daily report (30-minute interval)	With SD card: 5 years or up to 80.0% capacity Without SD card: 3 months or up to 70.2% capacity	1-day interval data 1 file/month
Monthly report	With SD card: 10 years or up to 80.0% capacity Without SD card: 5 years or up to 70.2% capacity	1-day interval data 1 file/month
Annual report	With SD card: 10 years or up to 80.0% capacity Without SD card: 5 years or up to 70.2% capacity	1-month interval data 1 file/year
Storage medium	Internal non-volatile memory or external non-volatile memory	Internal: Flash memory External: Micro SD card (sold separately); also compatible with SDHC
At power failure	Data before power failure is saved.	Excludes data being collected immediately before power failure
Data transmission method	Transfer via csv format	FTP: Periodic transfer of accumulated request data to PC via FTP SMTP: Periodic transfer of accumulated request data to PC via email http: Manual import to PC via zip compression

■ Dimensions, mm

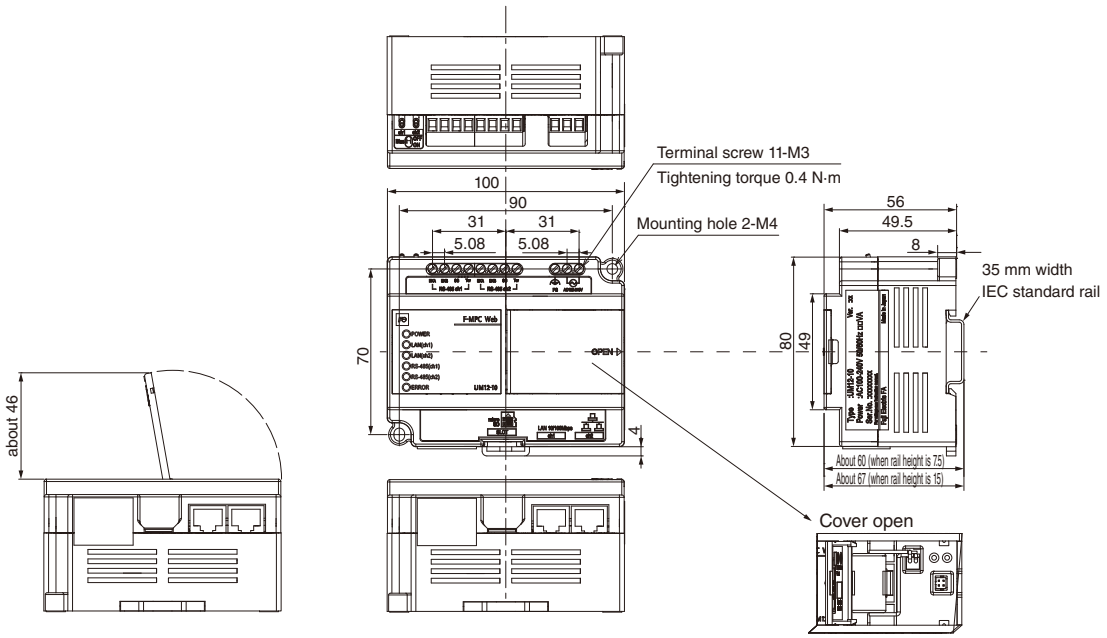

■ System configuration

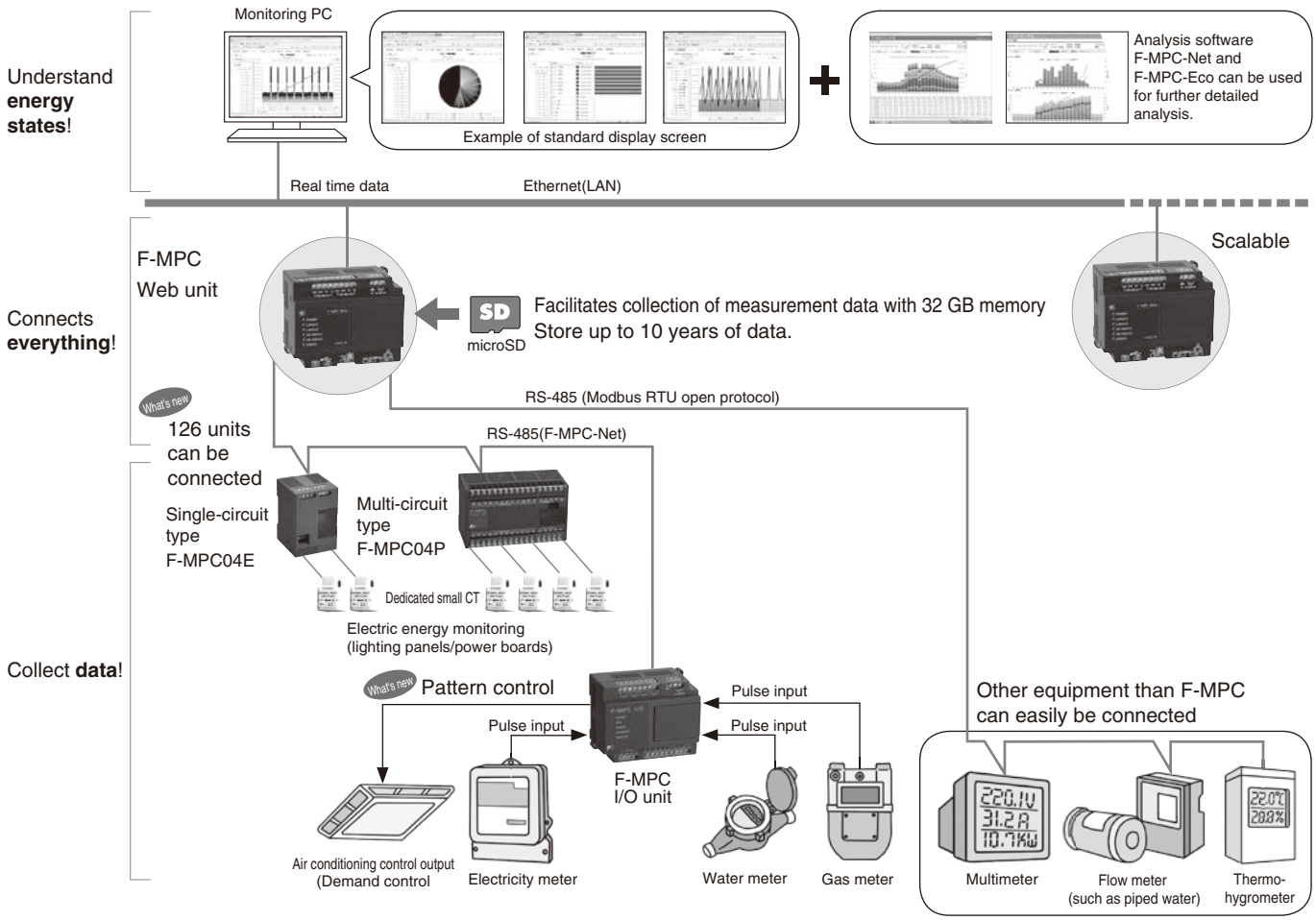

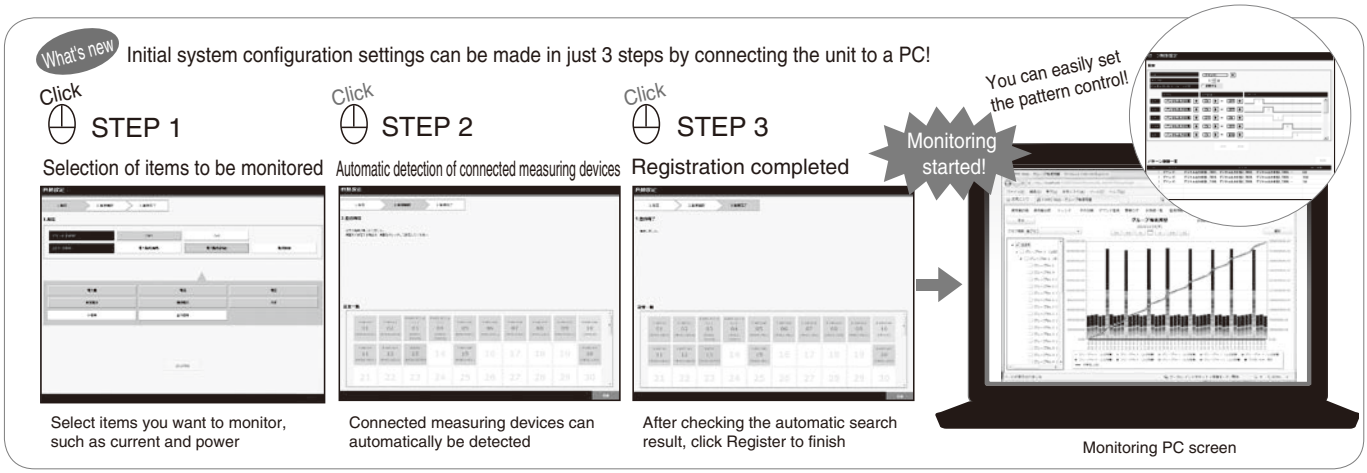

Power Monitoring Equipment
F-MPC Web unit

■ Peak power monitoring by F-MPC Web (Monitoring via power receiving meter pulse)

The F-MPC I/O unit and F-MPC Web unit can be combined to monitor peak power.

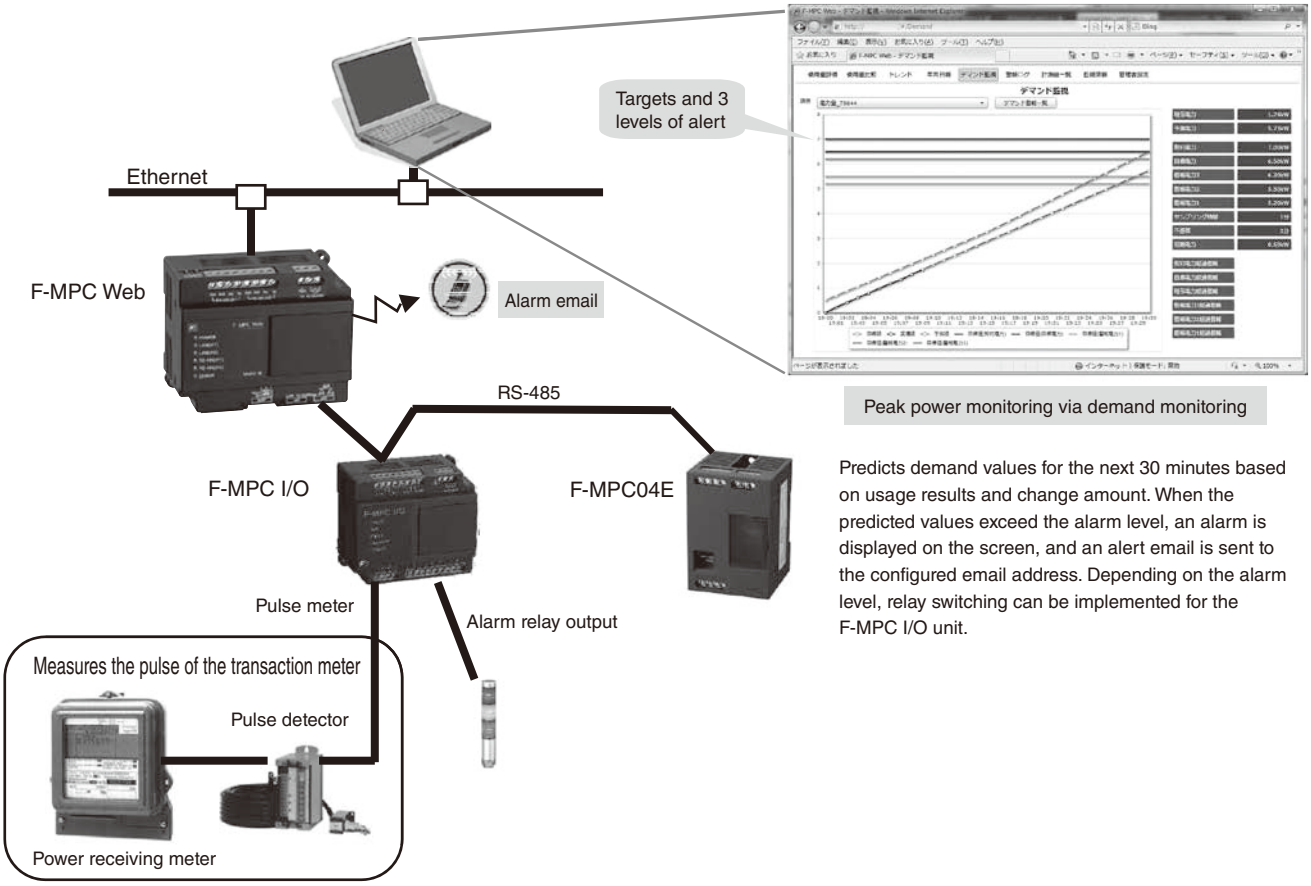

Peak power monitoring via demand monitoring

Predicts demand values for the next 30 minutes based on usage results and change amount. When the predicted values exceed the alarm level, an alarm is displayed on the screen, and an alert email is sent to the configured email address. Depending on the alarm level, relay switching can be implemented for the F-MPC I/O unit.

Power monitoring unit F-MPC04, F-MPC04P, F-MPC04S, F-MPC04E

Power monitoring unit F-MPC04 series

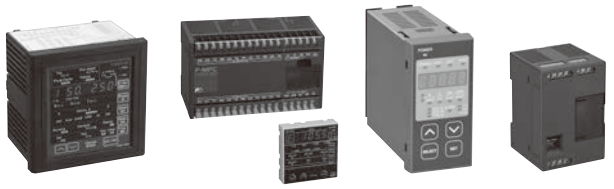

F-MPC04 (UM04) | F-MPC04P (UM02) | F-MPC04S (UM03) | F-MPC04E (UM05)

■ Description

- F-MPC04 series power monitoring equipment, designed for used in low voltage circuits, can perform electric power management and monitoring from high to low voltage circuit efficiently and economically, used together with F-MPC60B and F-MPC30 series.
- F-MPC04 series consists of 3 types: type UM04 integrated power monitoring unit that can monitors up to 10 feeders, type UM02 multi-circuit power monitoring unit that is space-saving and can monitor up to 8 feeders in three-phase three-wire system, and type UM03 single circuit power monitoring unit, being compact, that has optimum output functions for preventive maintenance, and is best suited for installation in a unit of facility, section, and floor.
- RS-485 communications interface is standard. With our application software of F-MPC-Net power monitoring system, you can automatically display, print, and save the data measured by F-MPC 04 on your PC.

Type				F-MPC04	F-MPC04P			F-MPC04S		F-MPC04E	
				UM04-ARAE	**UM02-AR2**	**UM02-AR3**	**UM02-AR4**	**UM03-ARA3G**	**UM03-ARA3**	**UM05-AR3**	**UM05-AC3**
				Integrated power monitoring unit	Multi-circuit power monitoring unit			Single-circuit power monitoring unit		Single-circuit power monitoring unit	
Measuring function	No. of phase and wire	1-phase 2-wire		10 circuits	12 circuits	—	—	1 circuit	1 circuit	1 circuit	
		1-phase 3-wire 3-phase 3-wire		10 circuits	—	8 circuits	—				
		3-phase 4-wire		6 circuits	—	—	4 circuits	—	—	—	
	No. of voltage circuit			2	1			1	1	1	
	Measuring item	Voltage	[V]	○	○			○	○	○	
		Current	[A]	○	○			○	○	○	
		Power	[W]	○	○			○	○	○	
		Active power	[Wh]	○	○			○	○	○	
		Reactive power	[var]	○	○			○	○	○	
		Reactive energy	[varh]	○	–			○	○	○	
		Power-factor		○	○			○	○	○	
		Leakage current	[Io]	○	–			○	–	–	
		Basic component of leakage current	[Iob]	○	–			○ ○	–	–	
	Maintenance item	Demand	Current	○	–			○	○	–	
			Power	○	–			○	○	–	
			Max. current	○	–			○	○	–	
			Max. power	○	○			○	○	–	
		Max. voltage value		○	○			○	–	○	
		Min. voltage value		○	○			–	–	○	
	Harmonic current			○	–			–		–	
Protection	Current prealarm (OCA)			○	–			○ (Demand only)		–	
	Leakage current prealarm (OCGA)			○	–			○	○	–	
	Leakage current trip (OCG)			○	–			○	–	–	
Communications interface				RS-485, Modbus	RS-485			○	–	RS-485, Modbus	–
Display and setting				○	Display and setting unit UM02X-S			RS-485	RS-485	Display and setting unit UM05X-S	
Devices to be connected	Current sensor (Current Transformer:CT)			○ **1	CT: 5, 50, 100, 200, 400, 800A						
	ZCT (separately installed)			○	–			○	–	–	–
	MCCB with ZCT			○	–			○	–	–	–

Note *1: FMPC 04 (UM04) is connected to CT via CT-BOX. For combination of F-MPC04 (UM04), CT-BOX and CT, *See page D1-231* and *D1-255* ; "Applicable CT."

Power Monitoring Equipment
Power monitoring unit F-MPC04, F-MPC04P, F-MPC04S, F-MPC04E

■ System configuration example
Low voltage

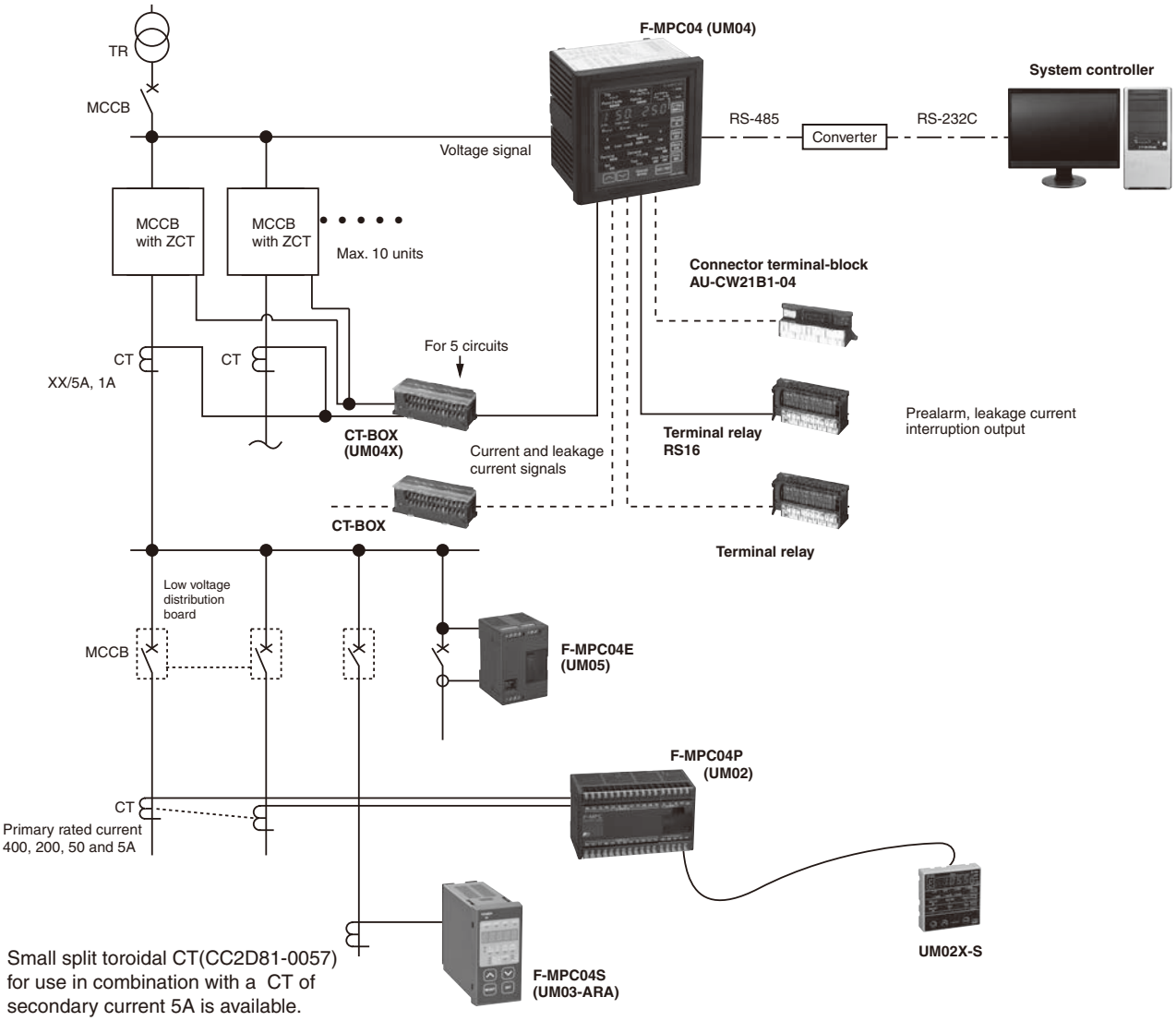

Small split toroidal CT(CC2D81-0057) for use in combination with a CT of secondary current 5A is available.

Integrated power monitoring unit, UM04

■ Description

Integrating complete functions required for power distribution and power line data management in a single unit (up to 10 circuits for 3-phase 3-wire system)

- Supports multiple power distribution lines
  UM04 allows economical management of each facility and installation by means of communications interface.
- Easy mounting to existing switchboards
  Split-through type CTs enables UM04 s easy mounting to existing boards.
- Flexible energy management
  UM04 manages power line data such as measurement, preventive maintenance, maintenance and electricity quality, and transmit those data to upper level controller, thus promises energy and labor-saving.
- Harmonics current measurement
  The third, fifth, seventh, and total harmonic current can be measured.
- Monitor insulation deterioration and implement preventive maintenance by measuring leakage current.
  Provides deterioration trend analysis with trend data and preventive maintenance with 2-stage output (leakage current pre-alarm and leakage current relays).
- Compatible with MODBUS RTU protocol.
  Select between the MODBUSRTU protocol or the F-MPC-Net protocol for the F-MPC series.

UM04-ARA4 CT-BOX

- Handles digital input.
  Four inputs (ON/OFF status and pulse count digital signals) from the relay connector terminal block.
- Related Equipment
  Molded case circuit breakers with ZCT and split type current transformers are also introduced as related products, RS16 Terminal Relay which outputs leakage current prealarm and the connector terminal-block which outputs kWh pulse, are also explained (UM04 use only).

D1

■ Type number nomenclature

Integrated power monitoring unit

UM04-ARA4

F-MPC04 basic type

■ Types

Description	Specification	Type	Remarks
Integrated power monitoring unit	RS-485, 2VT-conformed	**UM04-ARA4**	
CT-BOX	For CT secondary current 5A	**UM04X-5**	
	For CT secondary current 1A	**UM04X-1**	
Related product			
Terminal Relay	15 output	**RS16-DE04H**	*See page D1-257.*
Connector cable	Length 1m/2m/3m	**AUX014-20□**	*See page D1-257.*
Connector terminal block	kWh pulse output For digital input	**AU-CW21B1-04**	*See page D1-258.*

■ Applicable CT

Current transformer (CT)	CT secondary current	Applicable CT-BOX	Applicable integrated power monitoring unit
Split CT Type CC2C76-□□□1 Type CC2D74-□□□1	1A	UM04X-1	UM04-ARA4
General-purpose CT XX/1A	1A		
General-purpose CT XX/5A	5A	UM04X-5	

Applicable circuit	CT-BOX	
	One unit	Two units
Three-phase/3-wire	5 feeders max.	10 feeders max.
Single-phase/2-wire		
Single-phase/3-wire		
Three-phase/4-wire	3 feeders max.	6 feeders max.

* The number of countable feeders depends on the number of CT boxes.

Power Monitoring Equipment
Power monitoring unit F-MPC04

■ Specifications
• General specifications

Item		Specification
Rating	Rated frequency	50 or 60Hz (Selectable by the setting)
	Rated voltage	Applicable to both 110V and 220V AC, 110V AC for use with a VT secondary circuit
	Rated current	Depends on CT-BOX specifications (5A, 1A in a CT secondary circuit, power consumption: 0.1VA max., excluding power loss in the external cable resistance)
	Zero-phase CT	EW type or MCCB with a ZCT (zero-phase current transformer) type (FUJI model)
Control power supply		85 to 264V AC (By exclusive control power supply terminal)
Inrush current		40A max., 3ms max. (AC) 85A max., 3ms max. (DC)
Control power consumption *1		25VA max. (Power monitoring unit + two CT-BOXes + Terminal Relays with all contacts ON)
Rated input	Voltage input (VT ratio)	100V direct input,200V direct input VT primary/secondary : AC220/110V, AC440/110V, AC440/220V, AC240/110V, AC400/110V, AC3.3k/110V, AC6.6k/110V
	Current input (CT ratio)	Primary rating setting : 10A, 15A, 20A, 25A, 30A, 40A, 50A, 60A, 75A, 80A, 100A, 120A, 150A, 160A, 200A, 250A, 300A, 320A, 400A, 500A, 600A 630A, 750A, 800A, 100A, 1200A, 1250A, 1500A, 1600A, 2000A, 2500A, 3000A, 3150A, 3200A, 4000A, 5000A, 6000A, 7500A
Ambient temperature		-10 to + 55°C (no icing or no condensation)
Storage temperature		-20 to + 70°C (no icing or no condensation)
Humidity		20 to 90% RH (no condensation)
Atmosphere		No corrosive gas and no heavy dirt and dust
Alarm and shutdown outputs		Continuous output current: 1A max. (with output of terminal relay, RS16-DE04H) Make and break current: 250V AC 5A, 30V DC 5A max.
Insulation resistance		10MΩ min.: between ground and electric circuits connected together 5MΩ min.: between electric circuits, between contacts
Dielectric strength		2000V AC, 1 minute between ground and electric circuits connected together, excluding T-link and RS-485 signal circuits
Impulse		4.5kV (1.2 × 50 μs) between ground and electric circuits connected together, excluding T-link and RS-485 signal circuits
Momentary overload capability		20 times rated current, nine times for 0.5s, once for 2s
Shock resistance		Approx. 300m/s^2, three times in each of X, Y, and Z axes
Noise immunity		1 to 1.5MHz damped oscillation noise having 2.5 to 3kV peak voltage for 2s 1.5kV square wave (rise time: 1ns, pulse width: 1μs) for 10 minutes continuously
Vibration resistance		JIS C 60068-2-6 10-58Hz: single amplitude 0.075mm. 58-150Hz=constant accelation 10m/s^2 X, Y, Z directions 8minutes X10 cycles
Electrostatic noise resistance		Mounting steel panel surface: ± 8kV F-MPC04 (UM04) front panel surface: ± 15kV
Permissible momentary power failure		20ms, continuous operation (excluding display)
Mass		Power monitoring unit UM01: 1000g, CT-BOX: 300g Terminal relay: 200g

Note *1 The control power consumption on the table applies to where CT-BOXes and Terminal relays are connected to the power monitoring unit UM04.

• Measurement and display specifications

Measurement type	Effective measuring range	The main body display	Communication data	Accuracy (%)	Remarks
Current: I(r), I(s), I(t)	0, 0.5% to 150% of CT secondary rated current	4 digits	4 digits	±2.5% FS	"0.00" is displayed, if the measured value is about 1.0% or less.
Voltage: *3 V(uv), V(vw), V(wu)	VT secondary voltage: 3Ø3W : max 264V 3Ø4W (Phase voltage): max.264V 3Ø4W (Line voltage): $\sqrt{3}$x264V			±2.5% FS	VT secondary voltade is jointly used as internal control power supply. (For U-V)
Zero-phase current Io	0, 50 to 3600mA			±20% FS	"0" is displayed, if the measured value is about 50mA or less.
Active power *4*5	0 to 3.5kW (220V) as converted to current transformer secondary value	4 digits with the code	4 digits with the code	±2.5% FS	Two-wattmeter method: Measured when the value is 0.4% or higher of the rated current. (Ir, It, Vuv, Vvw)
Reactive power *4*5	0 to 3.5kvar (220V) as converted to current transformer secondary value			±2.5% FS	Two-wattmeter method
Power factor *4	Lead : 0%-100%-Lag : 0%	3 digits with the code	4 digits with the code	±5% The "90°" phase angle conversion	
Active electric power	0 to 99999 (kWh) The effective power quantity of the plus	5 digits	*6	Equivalent to ordinary class specified in JIS	±2.0% (Power factor of 1 between 5% and 120% of CT primary rated current) ±2.5% (Power factor of 0.5 between 10% and 120% of CT primary rated current)
	0 to 99999 (kWh) The effective power quantity of the minus				
The reactive energy	0 to 9999 (kvar) The reactive energy of the plus	none	*6	±0.5% (No display)	
	0 to 9999 (kvar) The reactive energy of the minus				
The voltage minimum value	"264V from 85V" in VT secondary of each phase	4 digits		±2.5% FS	
The voltage maximum value	"264V from 85V" in VT secondary of maximun-phase			±2.5% FS	
Harmonic current	3rd & 5th order : 0, 2.5% to 150% 7th order : 0, 5.0% to 150%			±2.5% (7th order: ±5%)	*7

Note : *1. The measurement accuracy includes the error in the CT boxes and ZCT. The error in the combined VTs and CTs are not included.
*2. Current, voltage, and power performance characteristics are according to JIS C 1102 (indicating electrical measuring instruments). The measurement display value is the average value over approximately 1 second.
*3. The values in the table are the line voltages for 3-phase, 3-wire systems and the phase voltages for 3-phase, 4-wire systems. For 3-phase, 4-wire applications, the setting in this table can be used to display either the phase voltages or line voltages.
*4. Selling/purchasing for power measurement and lead/lag for power factor measurements are displayed with one sign (blank for positive). The meaning of positive/negative for each measurement item is given below.
*5. The maximum values of the active power and reactive power are ±3.5kW at a 5A secondary current for 3-phase, 3-wire systems, ±0.69kW at 1A for 3-phase, 3-wire systems, ±6.0kW at a 5A secondary current for 3-phase, 4-wire systems, and ±1.2kW at a 1A secondary current for 3-phase, 4-wire systems.
*6. For the F-MPC-Net protocol, the lower four digits of the display are sent. For the MODBUS RTU protocol, 0 to 999999.999kWh is sent and the step value for the total countup depends on the VT ratio and CT ratio.
*7. For 3-phase, 3-wire systems, the harmonic currents for phases R and T are measured. For 3-phase, 4-wire systems, the harmonic currents for phases R, S, and T are measured.

The sign "±" in electric measuring

The sign "±" is used to display "LEAD/LAG" in power-factor, measuring and "electric power selling/purchase" in electric power measuring. No signs are used if a value is "+". The sign "±" has the following meanings depending on the measured items.

• Active power: kW
  +: Power purchase (Consumed electric power)
  –: Electric power selling (Inverse electric power flow)
• Reactive power: kvar
  +: Lagging current by reactive volt-ampere meter method
  –: Leading current by reactive volt-ampere meter method
  * "LEAD/LAG" reverses with electric power selling/purchase.
• Power factor: COSφ
  +:LEAD –: LAG

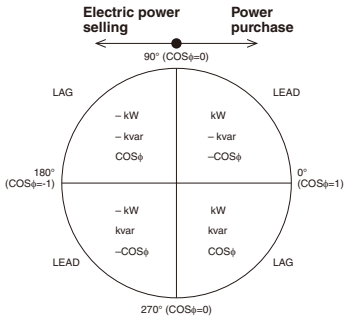

Power Monitoring Equipment
Power monitoring unit F-MPC04

• Demand measurement

Item	Specification
Current (I(r), I(s), I(t)) Effective power Zero-phase current (rms:Io, 50/60Hz:Iob) Harmonics currents, voltage	Time: Select one from 0, 1 to 15 minutes (1 minute increments) and 30 minutes it at the initial setting (common to all 10 circuits). Display item: 1. Demand values 2. Maximum demands (maximum values recorded before the last reset operation)

● Specifications of a leakage current relay

Sensitive current

Setting value	200/500/1000/2000/3000mA or Lock (Io or Iob selectable)
Operating Level	50 to 100% of setting value (Operate at less than 50%, no opearate at 100%)

Operation time characteristics

Setting time	Inertia non-operating time	Operating time
0.1s	–	100ms max.
0.3s	150ms min.	0.3s max.
0.5s	250ms min.	0.5s max.
1.0s	500ms min.	1.0s max.
3.0s	1,500ms min.	3.0s max.

Note: • Sensitive current and operation time can be set by an arbitrary combination.
• The values on the table is for a trip relay's specifications. The pre-alarm relay operates at half the operating level on the table, and its operation time is 10s fixed. The pre-alarm relay can be used as an alarm against leakage current increase in case of cable insulation deterioration or flood.

● Data display at fault occurrence

Pre-alarm of load current, pre-alarm of leakage current relay (auto-reset), maximum current indication at circuit interruption (indication reset by resetting)

● kWh-pulse-output specifications (for products with a kWh-pulse-output feature)

Transistor open collector output: 35V DC, 50mA max., (residual voltage at ON state: 2.5V max.)
Output pulse width: 200ms ±20ms
Output period: 1,000ms min.
Output pulse rate: 10^n kWh/pulse, n =-2, -1, 0, 1, 2, or 3 (selected from VT and CT ratio.)

● ZCT with Leakage Current Relay

The UM04 can be used together with a MCCB with ZCT or a zero-phase current transformer.

D1

■ Communications specifications

Item		Specifications	
		F-MPC-Net protocol *	MODBUS RTU protocol *
Standard		EIA-485	
Transmission method		Half duplex, 2-wire	
Data exchange method		1:N (UM04) polling/selecting	
Transmission distance		1,000m (total length)	
Number of stations		31 max. per system (excluding master)	
Transmission speed		4,800/9,600/19,200bps (selectable)	
Address setting		1 to 99	
RS-485 terminal names		DXA, DXB	Connect DXA as D1(+) and DXB as D0(-).
Transmitted characters		ASCII	Binary
Data format	Start bits	1 bit (fixed)	1 bit (fixed)
	Data length	7 or 8 bits (selectable)	8 bit (fixed)
	Parity bit	None, even, or odd (selectable)	None, even, or odd (selectable)
	Stop bits	1 bit (fixed)	No parity: 2 bits (fixed) Others: 1 bit (fixed)
	BCC	Even vertical parity	CRC-16

* The F-MPC-Net or MODBUS RTU protocol can be set for communications for the UM04.

■ Digital input specifications

Item	Specification	Remarks
Number of inputs	4	Communications transmissions and UM04 display of ON/OFF status and pulse count.
Exterior input signals	No-voltage contact input or transistor open-collector input	
Input specifications	24V DC, approx. 5mA flow OFF level: 1mA max.	
Minimum input signal width	50ms	

■ System configuration

With an integrated power monitoring unit UM04, you can easily construct a low-voltage power distribution system equipped with leakage current measuring, leakage current pre-alarm, and earth leakage circuit shutdown.

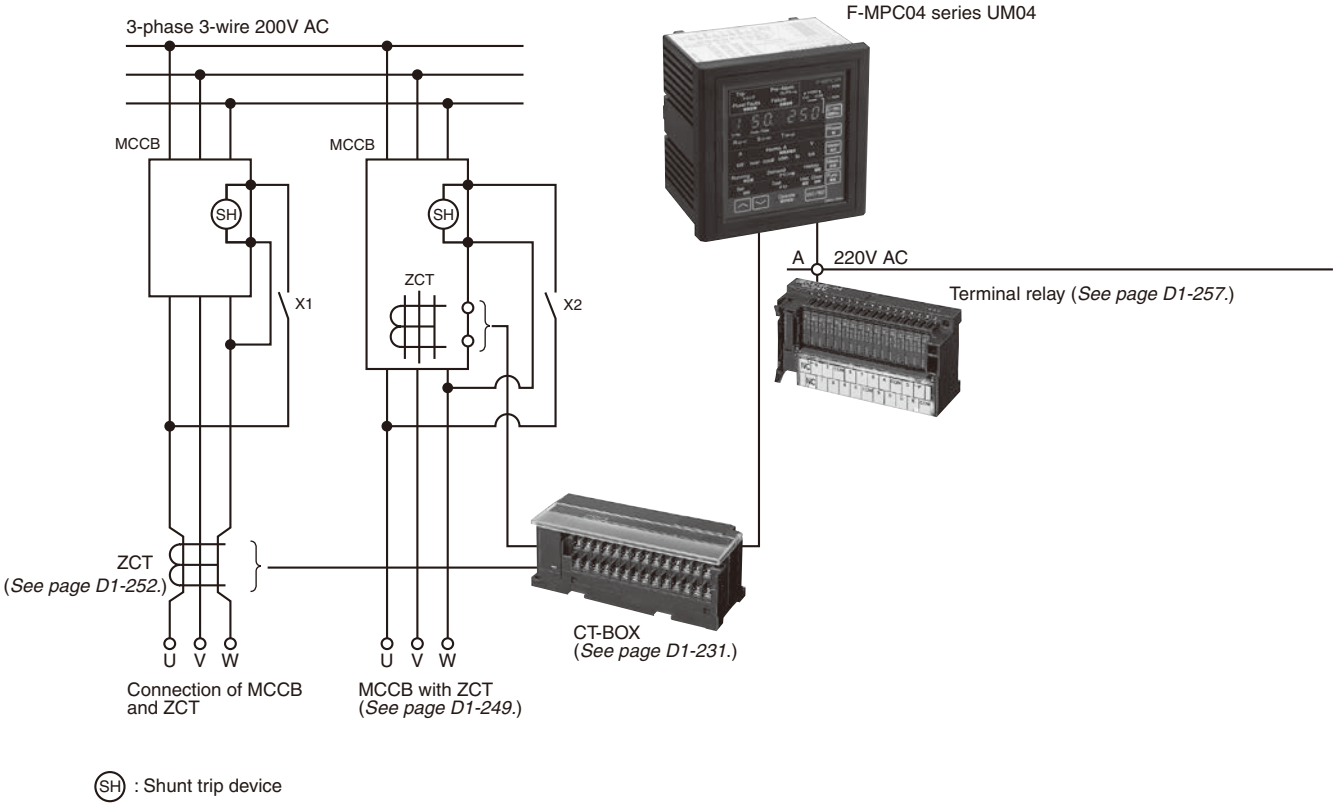

■ Dimensions, mm

• Integrated power monitoring unit, UM04

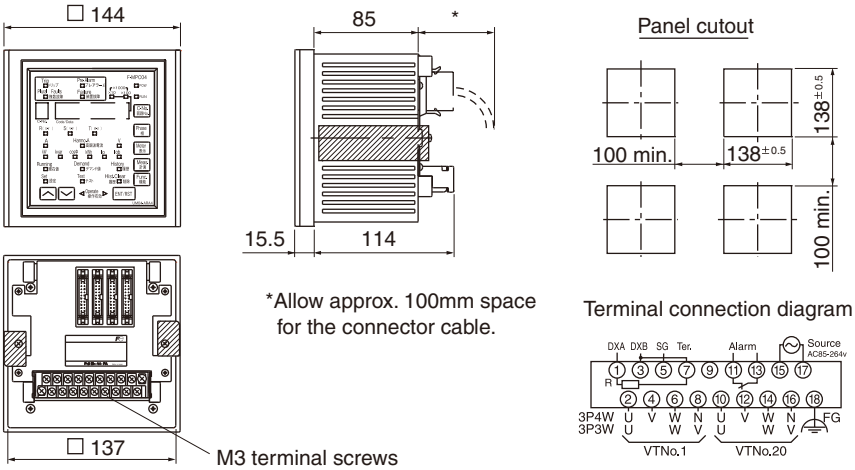

• CT-BOX, UM04X

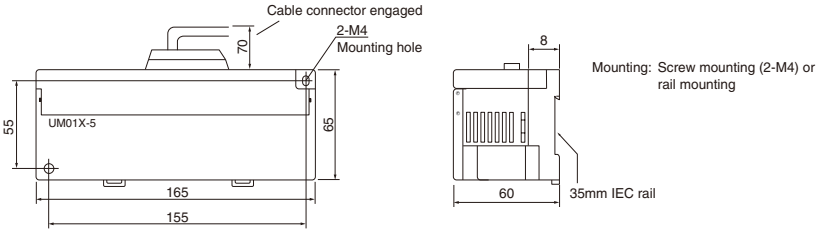

Power Monitoring Equipment
Power monitoring unit F-MPC04P

Multi-circuit power monitoring unit, UM02A

■ Description

Integrating measuring functions required for power monitoring in one unit

- A single unit measures multiple circuits
  A single UM02A can measure up to 8 feeders in 3-phase 3-wire, 12 feeders in single-phase 2-wires and up to 4 feeders in 3-phase 4-wire circuit.
- Easy installation into existing switchboards
  Compact UM02A can be easily installed into on-site power distribution or lighting panel, irrespective of new panel or existing panel, to create power monitoring system economically.
- On-site measuring instrument
  UM02A can be used an on-site measuring instrument by combining with an optional display and setting unit UM02AX-S.
- Communication interface
  As UM02A has an RS-485 communications interface as standard, it can communicate with other power monitoring equipment with RS-485

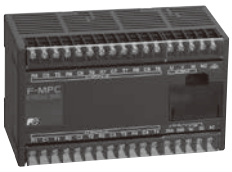

Measuring unit
UM02A-AR3

Display and setting unit
UM02AX-S

■ Type number nomenclature

Multi-circuit power monitoring unit (Measuring unit)

UM02A-AR 3

Basic type
UM02A-AR: Measuring unit

Applicable circuit
2: Single-phase 2-wire, up to 12 feeders
3: 3-phase 3-wire, Single-phase 3-wire, Single-phase 2-wire, up to 8 feeders
4: 3-phase 4-wire, up to 4 feeders

■ Type and applicable circuit

Description	Applicable circuit	Type
Measuring unit	Single-phase 2-wire, up to 12 feeders	**UM02A-AR2**
	3-phase 3-wire, Single-phase 3-wire, Single-phase 2-wire,up to 8 feeders	**UM02A-AR3**
	3-phase 4-wire, up to 4 feeders	**UM02A-AR4**

Sold separately

Display and setting unit	The TP48X socket and connecting cable are provided as accessories.	**UM02AX-S**

■ Specifications F-MPC04P (UM02)

• General specifications

Item		Specification
Ratings	Voltage	Direct input: 100 or 200V AC, 400V AC (AR4 only) VT primary/ secondary: 220, 440V AC, 3.3k, 6.6kV AC/110V AC, 440/220V AC *1
	Current	Split CT: 5, 50, 200, 400A AC Small split current sensor CT: 5A AC (primary rated set range 10 to 7500A) *1
Control power supply		100/200V AC common use (85 to 264V AC) AR2: between terminals P1-N, AR3: between terminals U-V, AR4: between terminals P1-P2
Inrush current		15A max., 3ms max. (100V AC 50Hz) 30A max., 3ms max. (200V AC 50Hz)
Control power consumption		20VA or less (or approx. 15VA at 200V AC, 10VA at 100V AC)
Ambient temperature		Operating: -10 to 55°C (no icing or no condensation) Storage: -20 to 70°C (no icing or no condensation)
Humidity		20 to 90% RH (no condensation)
Atmosphere		Free from corrosive gases and excessive dusts or particles
Insulation resistance		10MΩ min. between electric circuits and ground
Dielectric strength		2000V AC, 1 minute (2500V AC, 1 minute for AR4) between control power circuits and ground
Lightning impulse noise resistance		4.5kV (1.2 × 50μs) between control power circuits and ground (6.0kV for AR4)
Momentary overload capability		20 times rated current, 9 times for 0.5s.
Vibration resistance		JIS C 60068-2-6 10 to 58Hz: single amplitude of 0.075mm, 58 to 150Hz, constant acceleration of $10m/s^2$ 8 minutes x 10 cycles in each of X, Y, and Z directions
Shock resistance		JIS C 60068-2-27 Half sine wave $300m/s^2$, for 11 ms x 3 times in each of X, Y, and Z directions
Noise immunity		1.5kV square wave (rise time: 1ns, pulse width:1μs) for 10minutes continuously
Permissible momentary power failure		20ms (continuous operation) except RS-485 communications
Mass		Measuring unit: Approx. 500g, Display and setting unit: Approx. 200g

Note *1 Make VT and CT ratio settings through the display and seting unit UM02X-S or from the host controller.

• Measurement specifications

Item	Effective measurement range		Display	Accuracy *1
Current (N-phase current measured in AR4)	With split CT (200A and 400A AC) combined 0, 0.4% of In to 500A With small split current sensor (50A AC) combined 0, 0.4% of In to 50A with small split current sensor (5A) combined *4 0 to n times CT rating		4 digits	±1.5%
Active power				±2.5% for S-phase current of AR3 and N-phase current of AR4
Reactive power *2				
Power-factor			□. □□	±5% (converted into a phase angle of 90°)
Active electric energy *2			5 digits	Equivalent to JIS ordinary class *4
Max. active power *3	Same as above. (with a demand time set to 0, 1, 5, 10, 15, or 30min.)		4 digits	±1.5%
Min. voltage each phase *2	AR2, R3 85 to 264V (directly or VT secondary voltage conversion) The minimum and maximum voltage are average values for 0.3s.	AR4 Phase voltage 50 to 288V (directly or VT secondary voltage conversion) Line voltage 86 to 498V The minimum and maximum voltage are average values for 0.3s.	4 digits	±1.5%
Max. voltage *2				±1.5%

Notes *1 Measurement accuracy does not include CT and current sensor.
*2 In measurement mode display is the number of digits of RS-485 communications data. The display and setting unit does not display communications data on reactive power, minimum voltage, and maximum voltage values.
*3 Max active power and active electric energy values can be reset by the display and setting unit and host controller. And, when VT ratio or CT ratio is changed, these are autamalically reset.
*4 With 1-turn or 3-turn primary winding selected for the 5A small split current sensor, the lower limit of minute current measurement is selected as specified below.

Classfication	Measurement and display range	Measurement lower limit (Electric energy starting current)	Accuracy	
			Current and power	Electric energy
1 turn	0, 2% to rating × 10	2% of rating	0 to rating: ±1.5% of rating Exceeding rating: ±1.5% (FS)	±2.5% (5% to 100% of rating, load power factor -0.8 to 1.0 to +0.8)
3 turns	0, 0.7% to rating × 3	0.7% of rating		

Note: * Sampling interval/measurement display value (communication) of current and power, and sampling and integration intervals of electric energy are shown below. In the case of an intermittent load, such as a welding machine, accurate measurement may be disturbed and therefore the use of the single-circuit F-MPC04S (*refer to page D1-229*) is recommended.

Power Monitoring Equipment
Power monitoring unit F-MPC04P

• Sampling interval and display value

Type	Sampling interval/display value of current and power (Communication)	Sampling and cumlative interval of power
UM02A-AR2	Approx. 0.2s / Average voltage for aprox. 1.5s	Approx. 0.2s
UM02A-AR3	Approx. 0.2s / Average voltage for aprox. 1.5s	Approx. 0.2s
UM02A-AR4	Approx. 0.1s / Average voltage for aprox. 0.4s	Approx. 0.1s

■ Display and setting unit UM02X-S, specifications

Item	Specification	Remarks
Control power supply	Supplied from the measuring unit UM02-AR	
Measuring unit UM02A-AR communications specifications	EIA-485 (always 19200bps fixed)	
Number of connectable measuring unit UM02A-AR	5 max.	UM02A-AR2, AR3, AR4
Max. cable length between UM02A-AR and UM02AX-S	23m	Total length between UM02AX-S and all UM02A-ARs
Display item	Operating status, measurement value VT, CT setting value, fault	Selective indication by a switch
Setting	Voltage, current (CT), demand time, pulse multiplication rate, No. of turns of CT secondary winding, host controller communications mode (different communications interface)	UM02A-AR incorporates a different RS-485 interface to communicate with a host controller.

Note : The display and setting unit UM02AX-S provides a function to start initial communications to recognize the UM02A-AR automatically when UM02AX-S is turned on. If on-site indication is not necessary once the setting to the measuring unit UM02A-AR is complete, UM02A-AR fully operates even without UM02AX-S.

■ Communications specifications

Item		Specification
Standard		EIA-485
Transmission system		2-wire half duplex
Data exchange		1: N (F-MPC04P, UM02-AR) polling/selecting
Transmission distance		1000m (total length)
No. of connectable units		Max.32 (including master)
Station number setting		01 to 99 (set with digital switch)
Transmission characters		ASCII
Transmission speed		4800, 9600, 19200 or 38400 bps (selectable)
Data format	Number of start bits	1 (fixed)
	Data length	7 or 8 bits (selectable)
	Parity bit	None, even, or odd (selectable)
	Number of stop bits	1 (fixed)
	BCC	Even horizontal parity

Note : Use the display and set unit to change the transmission setting.
The communications specifications cannot be changed through the host controller.

■ Dimensions, mm

● Measuring unit UM02A-AR

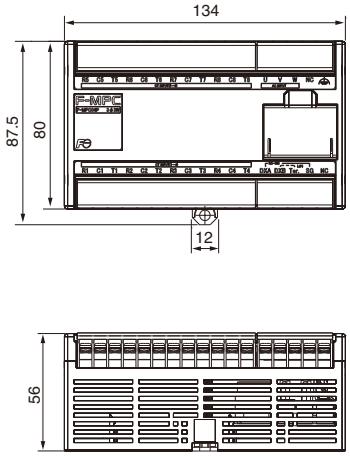

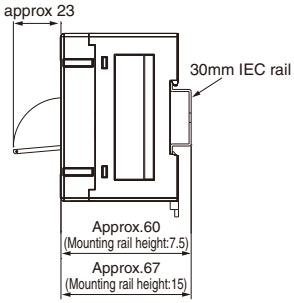

Terminal screw : 34 - M3 (with washer)
Terminal screw tightening torque : 0.5 to 0.6 N·m
Applicable amplifier terminal diameter: ⌀ 5.8 or less

● Display and setting unit UM02AX-S

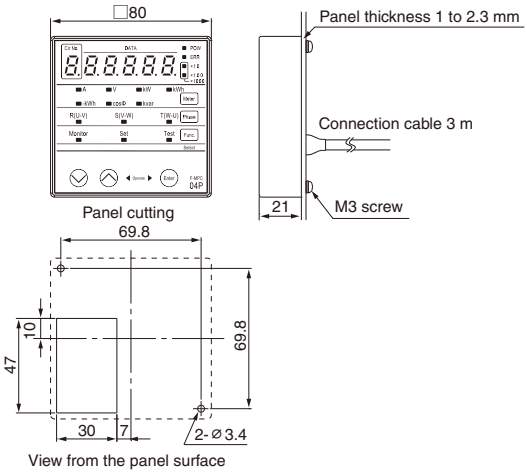

■ System configuration

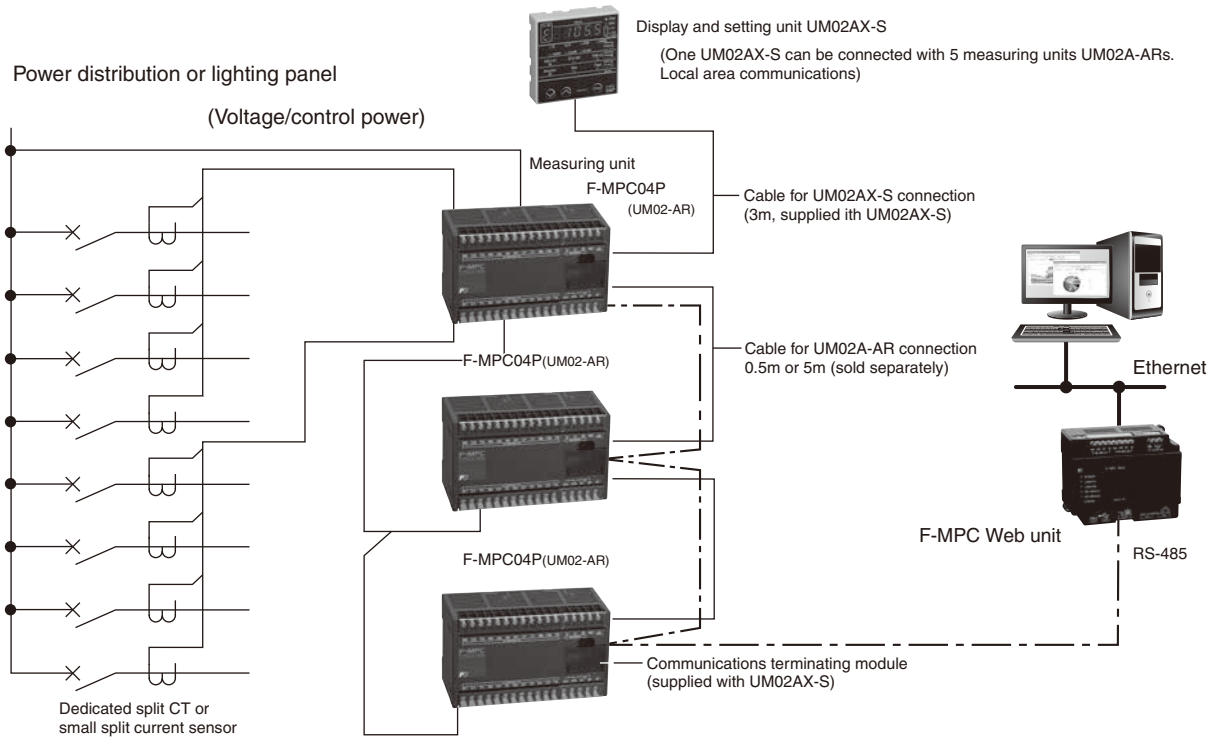

Note: * The display and setting unit UM02AX-S is a local area communications master and can monitor and be able to set maximum five measuring units, UM02A-ARs.
** Station address setting of measuring unit UM02A-AR
Use a digital switch on the measuring unit to set a different station address (communication address to host controller).
In local area communication of the display and setting unit UM02AX-S, the UM02AX-S will automatically read out the address of the measuring units connected with cables for unit connection, and communicate with hem.,

Power Monitoring Equipment
Power monitoring unit F-MPC04S (UM03)

Single circuit power monitoring unit, UM03

■ Description

Integrating measuring functions required for power monitoring in one unit

● Output functions for preventive maintenance selectable
- Power alarm/current prealarm
- kWh pulse output
- Leakage current alarm, leakage current prealarm output (model with leakage current measuring function) only

● Capable of measuring inrush current of welders
- High-speed sampling and calculation of voltage and current

● Compact design allows installation almost anywhere.
- Space-saving construction simplifies installation.
- Suited for monitoring individual equipment, section, and floor

● Networking capability
- RS-485 interface.
- Can be connected to power distribution system same way as the power monitoring equipment F-MPC 60B, 30, 04 (UM04, UM02) series products

UM03-ARA3

■ Type numbers

Single circuit power monitoring unit		Type
Leakage current measuring function	Not provided	**UM03-ARA3**
	Provided	**UM03-ARA3G**

Note : As CTs, use type numbers CC2D81-0057, CC2D81-0506, CC2D65-2008, CC2D54-4009, CC2B65-2008, and CC2B54-4009. *Refer to page D1-255*. General-purpose CTs (secondary rated current 5A or 1A) cannot be connected directly. Use the general-purpose CT (5A) together with type number CC2D81-0057. Use dedicated ZCT as combination ZCT with the UM03-ARA3.

■ System configuration

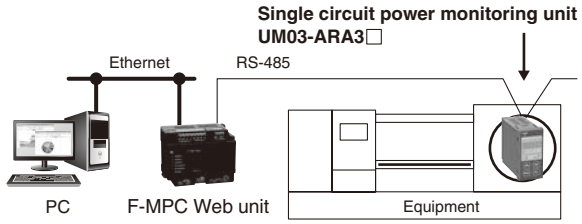

■ Specifications

• General specifications

Applicable circuit		Single circuit 3-phase 3-wire: 2-CT, single-phase 3-wire: 2-CT, single-phase 2-wire: 1-CT
Control power supply		100 to 200V AC (85 to 264V AC) 50/60Hz (45 to 66Hz)
Inrush current		15A, 3ms or less (at 110V AC, 50Hz) 30A, 3ms or less (at 220V AC, 50Hz)
Control power consumption		Approx. 7VA (at 220V AC) Approx. 5VA (at 110V AC)
VT consumed burden		Approx. 0.2VA
Continuous overload capability	Current input circuit	110% of maximum setting value (150% of rated current), 2 hours
	Voltage input circuit	291V AC (1.1×264V AC), 2 hours
Short-time overload capability	Current input circuit	2000% of max. setting value (150% of rated current), 9 times for 0.5s
	Voltage input circuit	200% of max. setting value (264V AC), 9 times for 0.5s
Vibration		10 to 58Hz 0.075mm (one-way amplitude) 58 to 150Hz: constant acceleration 10m/s^2, 10 cycles for 8 min in each X, Y, and Z directions
Shock		300m/s^2, in each X, Y, and Z directions, 2 times
Withstand voltage / Insulation resistance (500V DC megger)		2kV /10MΩ Between power supply terminals connected together and other terminals connected together 2kV /10MΩ Between measurement input terminals connected together and other terminals connected together 2kV /10MΩ Between alarm output terminals connected together and other terminals connected together 500V /10MΩ Between watthour pulse output terminals connected together and other terminals connected together
Ambient temperature		-10 to +55˚C
Storage temperature		-20 to +70˚C
Humidity		20 to 90%RH (no condensation)
Atmosphere		Free from corrosive gases and excessive of dusts
Grounding		Type D ground (100 Ω or less)
Allowable momentary power failure time		20ms (operation will continue)
Altitude		2,000m or less
Mass		Approx. 400g (main unit only, CT excluded)

• Measurement specifications

Item	Effective measurement range	Display	Accuracy *1
Current (R/S/T), demand current Max. demand current value	• With CT (200A AC) 0, 0.4% of In (0.8A) to 300A	4-digit	±1.5%: R- and T-phase ±2.5%: S-phase
Demand value and max. demand value of total harmonic current *2	• With CT (400A AC) 0, 0.4% of In (1.6A) to 600A	4-digit	±2.5%
Active power (±) Demand power Max. active demand power value	• With CT (5A) 0, 0.4% of In (0.2A) to 50A 0, to 1.5 times CT rating (for 5A)	4-digit	±1.5%
Reactive power (±)	(converted into CT secondary: 7.5A)	4-digit	±3%
Power factor (±)	(Max. display range: up to 9,999A)	3-digit	±5% (Converted into a phase angle of 90˚)
Active electric energy (+only)	• Demand time setting: 0, 1 to 15min	5-digit	Equivalent to JIS ordinary class (pf: 0.5-1.0- –0.5)
Reactive electric energy (±absolute value addition)	(by 1min step) 30min setting: Available	5-digit	±5%
Voltage	Converted into an input voltage 60 to 264 V AC	4-digit	±1.5% ±2.5%: Vv-w
Frequency *3	45 to 66Hz *2	3-digit	±0.5%
Leakage current (Io/Iob) *4 Max. demand value	0, 10 to 1000mA	4-digit	±2.5%

Note: *1 The measurement accuracy is a value for FS (full span).
*2 The total harmonic current relates only to phase R and phase T. Only the demand value and max demand value are displayed. The current value is not displayed.
*3 If the frequency is out of the measurement range (lower than 45 Hz or higher than 66 Hz), 0.0 [Hz] is displayed.
*4 Maesurement of leakage current is possible only with UM03-ARA3G.

• Output specifications

Item		UM03-ARA3	UM03-ARA3G	Specification
Watt-hour pulse output		Provided	Provided	Transistor open collector output 35V DC 100mA
Alarm output	Current prealarm (OCA), power alarm *	Provided	Provided	Replay output 250V AC 1A
	Leakage current prealarm (OCGA) (Io operation)	Not Provided	Provided	
	Leakage current alarm (OCG)	Not Provided	Provided	

Note: * Choose the current prealarm (OCA) output or power alarm by change of setting.

Watthour pulse output details

Output specifications	35V DC 100mA (residual 2.5V or less at ON)
Output pulse width	100ms±20ms
Output interval	200ms or more
Pulse multiplication rate	10^nkWh/pulse (n=–3 to 2 setup)

Alarm output details

	Setting range		Accuracy	
	Operate value	Time	Operate value	Time
Current prealarm (OCA) *1	I: 20 to 120% of rated value, Lock (5% step)	Depending on the demand time setting	±5% (rated min ±1.5%)	±10%
Power alarm *1	0 to 9999kW (1kW step)			
Leakage current alarm (OCG) (Io operation)	Operate current 100, 200, 500mA, Lock	0.1, 0.3, 0.5, 1.0s	75%±5% of setting value	75%±5% of setting value (min±25ms)
Leakage current prealarm (OCGA)	50±5mA 100 to 500mA (50mA step), Lock	0.1, 0.3, 0.5, 1.0, 10s or demand time *2	±5%	±5%

Note: *1 Select either the current pre-alarm output or the power alarm output through setup.
*2 When demand time is selected, the unit operates on I_{ob} (leakage current only with fundamental wave).

Power Monitoring Equipment
Power monitoring unit F-MPC04S (UM03)

■ Communications specifications

Item		Specification	Factory setting
Standard		EIA-485	–
Transmission system		2-wire half duplex	–
Data exchange		1: N polling/selecting	–
Transmission distance		1000m (total length)	–
No. of connectable units		max.32 (including master)	–
Station number setting		1 to 99	Without station number setup
Transmission characters		ASCII	–
Transmission speed		4800, 9600, or 19200 bps (selectable)	19200 bps
Data format	Number of start bits	1 (fixed)	–
	Data length	7 or 8 bits (selectable)	7 bits
	Parity bit	None, even,or odd (selectable)	Odd
	Number of stop bits	1 (fixed)	–
	BCC	Even horizontal parity	–

■ Front panel

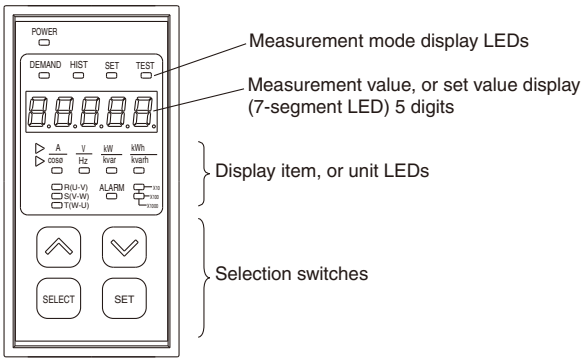

• Terminal layout

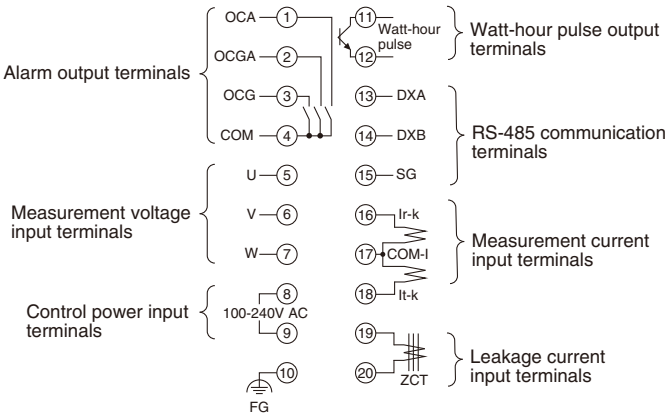

Note: Alarm output terminal ② ③ and ZCT input terminal ⑲ ⑳ of the UM03-ARA3 (without leakage current measuring function) are NC terminals. Do not connect anything to these terminals.

■ Dimensions, mm

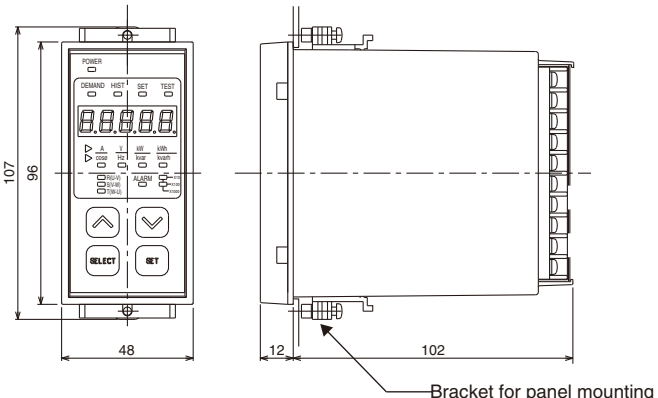

Mass: Approx. 400g

Panel cutting

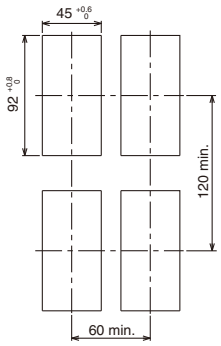

Fuji Electric FA Components & Systems Co., Ltd.
Information subject to change without notice

Power Monitoring Equipment
Power monitoring unit F-MPC04E (UM05)

■ Features

[Common]

- The F-MPC Series is a single-circuit internally mounted power monitoring unit.
- More compact and lightweight at only 1/2 the external dimensions and 1/3 the mass (compared with F-MPC04S).
- JIS regular grade measurement accuracy. It can measure electric energy (watt hours) even at light loads.
- Reduces power consumption by 30% (compared with the F-MPC04S).
- Easy set-up with rotary switch and dip switch.
- Measurement data can also be displayed on the panel by using the separately sold indicator.

UM05-AR3 type

Model UM05-AC3

[UM05-AR3]

- Comes equipped with an RS-485 communication function (UM05-AR3 only).

[UM05-AR3]

- Collected data can be stored on an SD card and displayed on a PC. There is no need to build a communication system. (UM05-AR3 is the type that comes with a communication function.)
- Comes with a PC application for easily analyzing and graphing the data stored on SD cards (You can download it from our website.)

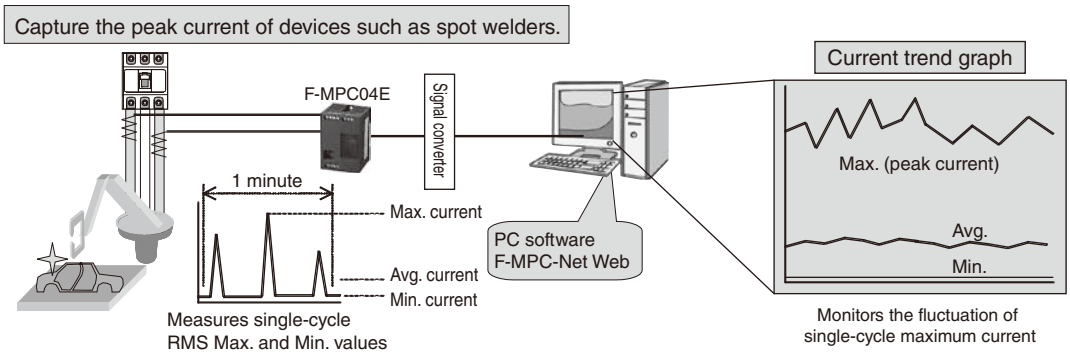

Accurate measurement even at low loads

JIS regular grade accuracy that ensures accurate measurement of electric energy (watt-hours) even at low loads

*The primary side of the inverter can also be monitored.

■ Wiring diagram

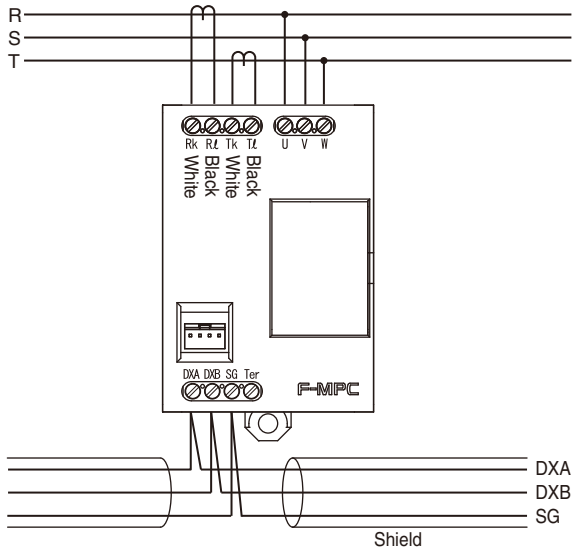

■ Model, type, part class

Part name			Type
Single-circuit, power monitoring unit, RS-485 communication type			**UM05-AR3**
Single-circuit, power monitoring unit, SD card type			**UM05-AC3**
Indicator and setter (F-MPC04E only)			**UM05X-S**
Screw mounting bracket (10 ct. set)			**BZ0SET**
Split CT (Manufactured by Fuji Electric Technica)	Primary rated current	5A	**CC2D81-0057**
		50A	**CC2D81-0506**
		100A	**CC2D71-1004**
		200A	**CC2D65-2008**
		400A	**CC2D54-4009**
		800A	**CC2D52-8009**

Power Monitoring Equipment
Power monitoring unit F-MPC04E (UM05)

■ Connection Terminal and Switch

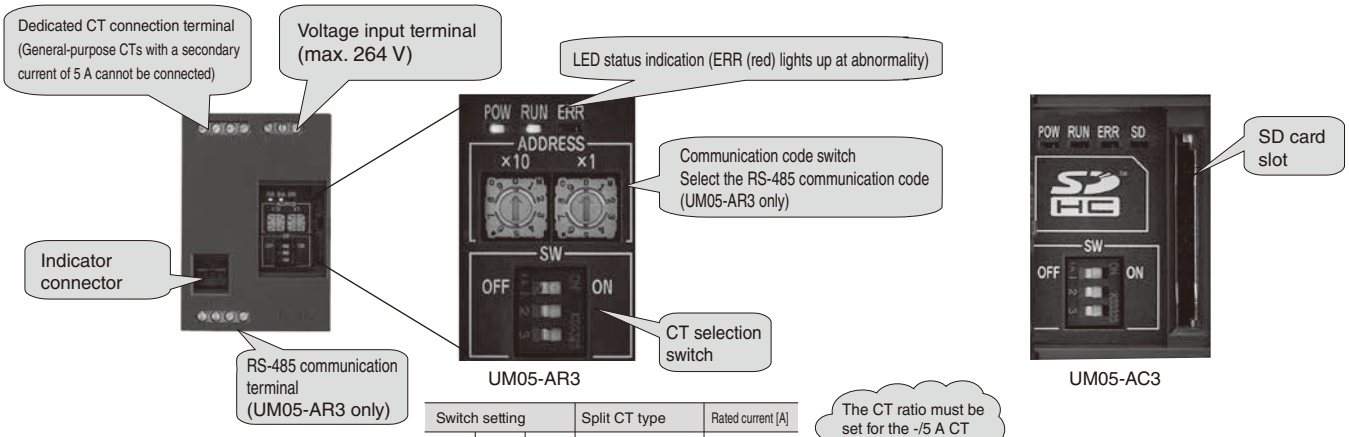

Switch setting			Split CT type	Rated current [A]
OFF	OFF	OFF	CC2D81-0057	-/5
OFF	OFF	ON	CC2D81-0506	50
OFF	ON	OFF	CC2D71-1004	100
OFF	ON	ON	CC2D65-2008	200
ON	OFF	OFF	CC2D54-4009	400
ON	OFF	ON	CC2D52-8009	800

The CT ratio must be set for the -/5 A CT using the indicator.

D1

■ F-MPC04E: Indicator and Setter (Option)

This is a dedicated indicator and setter to be used when creating a 1-to-1 connection with the F-MPC04E.
Use it to display measurement values by mounting it to the panel surface.
It can also be used to change the settings of the F-MPC04E power monitoring unit.
(Note) Only for the F-MPC04P: It cannot be used with the indicator and setter.

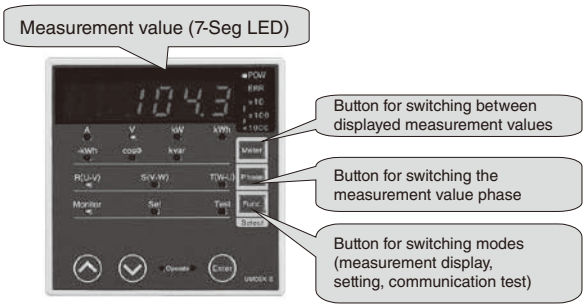

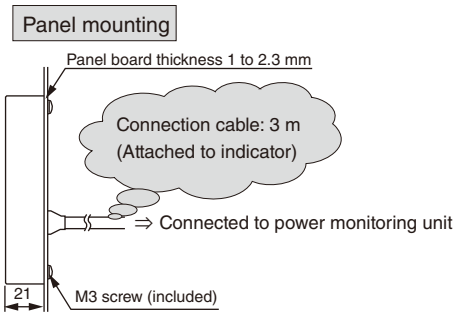

Indicator and setter setting items

Setting items	Contents of the setting	UM05-AR3	UM05-AC3	Factory default
CT ratio	When using a 5 A rated CT, set the primary rated current of the general-purpose CT. (Can be set at 7500 A or lower)	○	○	–
VT ratio	For 264 V systems or higher, set the VT ratio for the external VT. (Can be set at 6600/110 V or lower)	○	○	Direct input
Pulse multiplying factor	You can switch to “Standard-Squared”, if you want to monitor electric energy (watt-hours) in finer units.	○	○	“Standard”
Communication mode	Select the communication protocol: F-MPC-Net or MODBUS RTU.	○	–	F-MPC-Net
Communication parameter	Select the communication parameter. (Baud rate: 4.8 to 38.4 kbps; Bit length: 7 to 8 bits; Parity: odd/even/none)	○	–	19.2 kbps, 7-bit, odd
Clock time	Set the time of the internal clock that is used to determine the timing of SD card recording. Set the year, month, day, hour, and minutes. (The clock time is not set at the factory, so please set it using the indicator and setter.)	–	○	–
Fixed interval recording time	Set when you want to record at intervals shorter than 1 hour. You can set 1, 2, 5, 6, 10, 15, 30 [minutes], or “Do not record”.	–	○	Do not record

In the following cases, it is necessary to change the factory defaults by using the indicator and setter.
When using a [UM05-AR3] 5 A rated CT; When using an external VT; When changing the MODBUS RTU
When using a [UM05-AC3] 5 A rated CT; When using an external VT; When setting the clock; When you want to record at intervals shorter than 1 hour
*The clock time is not set at the factory. If the clock is not set, recording data will be displayed as 2000-01-01 0:00 when first powering on.

■ Specifications

● General specifications(common to UM05-AR3 and UM05-AC3)

Item		Specifications
Rating	Voltage	100 to 240 V AC (permissible operational voltage: 85 to 264 V AC) [Measurements and control power: shared input terminal; Control power: between U-V terminals]
	Frequency	50/60 Hz (permissible range: 47.5 to 63 Hz)
	Current (CT primary/ secondary)	AC5A/7.34mA,AC50A/73.4mA,AC100A/33.3mA, AC200A/66.7mA,AC400A/133.3mA,AC800A/133.3mA
Power supply	Load VA	6VA
	Inrush current	30 A, 3 ms (240 V) 15 A, 3 ms (100 V)
Insulation resistance		10 MΩ or higher between electrical circuits and ground (housing/DIN rail) 10 MΩ or higher between I/O circuits and ground 5 MΩ or higher between electric circuits and I/O circuits
Vibration resistance performance		10 to 58 Hz: One-way amplitude 0.075 mm, 58 to 150 Hz: Constant acceleration 10 m/s² 8 minutes × 10 cycles in each X, Y, Z direction (When equipped with a non-slip clasp)
Shock resistance		Half-sine wave 294 m/s², 11 ms, 3 times in each X, Y, Z direction (When equipped with a non-slip clasp)
Withstand voltage		2000 V AC for 1 minute between terminals and ground (housing/ DIN rail) 2000 V AC for 1 minute between electric circuits and I/O circuits

Item		Specifications
Noise resistance judgment criterion B		Damping oscillation wave: 1 to 1.5 MHz; Peak voltage: 2.5 to 3 kV damping oscillation waveform (2 s)
		Square wave: Continuous application of 1 ns × 1 μs 1.5 kV square wave noise for 10 minutes
		Radiation electromagnetic field: 20 V/m *1
		Electrostatic Gap discharge: 8 kV; Contact discharge (housing): 4 kV
		Burst Control power: 2 kV; CT input (clamp): 2 kV; I/O (clamp): 1 kV
Overload capacity	Current circuit	1.1 times maximum scale value (1.25 times rated current) for 2 hours
	Voltage circuit	1.1 times maximum scale value for 2 hours
Operating ambient temperature		-10 to 55℃
Storage temperature		-20 to 70℃
Relative humidity		20 to 90% RH (no dew condensation shall be observed)
Usage atmosphere		No corrosive gas or excessive dust shall be observed
Permissible instantaneous power failure time		20ms (communication and measurement are interrupted)
Mass		[Measurement unit] UM05-AR3 approx. 120 g (excluding CT) UM05-AC3 approx. 130 g (excluding CT) [Indicator and setter] Approx. 70 g (excluding connection cables)

*1 The operation of the power monitoring unit may temporarily stop under strong radio waves.

[UM05-AR3]

● Measurement specifications

(1) Present value indication

Item		Measurement range	Accuracy *1
Voltage	3-phase line voltage *2 (Vuv, Vvw, Vwu)	85 to 264V	Vuv,Vvw: ±1.0% FS Vwu: ±2.5% FS
Current	3-phase current (Ir, Is, It) *2	0.4 to 125% of rating (50 A CT: 0.4 to 100%, 100 A CT: 0.4 to 120%)	Ir, It: ±1.0% FS Is: ±2.5% FS
Active power *3	Reverse power flow is negative	According to current and voltage measurement range (Current × voltage × √3)	±1.0% FS
Reactive power *3	(Reactive power measurement method)	Same as above	±1.5% FS
Active electric energy *3	Forward active electric energy	Indicator: 6 digits F-MPC-Net communication: 4 digits MODBUS communication: 9 digits	Equivalent to JIS regular grade 2.0% at power factor of 1.0 and rated current between 5 and 120% 2.5% at power factor of 0.5 and rated current between 10 and 120%
	Reverse power flow active electric energy		
Power factor	(Reactive power measurement method)	0 to ±1.000	±3.0% FS (Conversion by 90˚ phase angle)

*1 The accuracy performance excludes external CT and VT tolerance.
*2 Measurement is made after automatically determining 3-phase 3-wire, single-phase 3-wire, and single-phase 2-wire types. For single-phase 2-wire types, Vvw, Vwu, Is, and It are zero.
*3 Active power, reactive power, and active electric energy are measured at voltage: 85 to 264 V and current: 0.4% to 125%.

(2) Period measurement values

Item		Indications	Communication	Precision	Remarks
Voltage	Period voltage max. value (Vuv, Vvw) Period voltage avg. value (Vuv, Vvw) Period voltage min. value (Vuv, Vvw)	×	○	±2.5% FS (Excludes VT tolerance)	The maximum and minimum values are the commercial-frequency, single-cycle RMS maximum and minimum values. During the period (1-minute), it retains the maximum, average, and minimum values from the previous period.
Current	Period current max. value (Ir, It) Period current avg. value (Ir, It) Period current min. value (Ir, It)	×	○	±2.5% FS (Excludes CT tolerance)	

Note) Responds by transmitting values every minute (not displayed on indicator).

● Communication specifications

Use RS-485 communication by selecting either the F-MPC-Net communication or Modbus RTU communication protocol.

Item		Specifications	
		F-MPC-Net	Modbus RTU
Standard		EIA-485	
Transmission method		Half duplex two-wire type	
Data exchange method		1: N (Power monitoring unit) Polling/selecting	
Synchronization method		Start-stop synchronization method	
Transmission distance		1000 m (total length)	
Number of connection units		Maximum 64 units *1 One system (however, the master device is included in the 64 units)	
Transmission speed		4800/9600/19200/38400 bps (selectable)	
Station address setting		1 to 99 *2 (Modbus RTU communication also supports 1 to 99)	
Connection method		Terminal block	
RS-485 terminal names		DXA,DXB	Connect by reading DXA as D1 (+) and DXB as D0 (-).
Transmission character		ASCII code	Binary
Data type	Start bit	1 bit (fixed)	1 bit (fixed)
	Data length	7 bits / 8 bits (select)	8 bit (fixed)
	Parity bit	None / Even number / Odd number (select)	None / Even number / Odd number (select)
	Stop bit	1 bit (fixed)	No parity: 2 bits (fixed) Other: 1 bit (fixed)
	BCC	Even number horizontal parity	CRC-16

The factory default at time of shipping is the F-MPC-Net protocol with communication speed:19200 bps; data length: 7 bits; parity: odd. (To change the factory default communication settings, you need to use the [UM05X-S] dedicated indicator.)
*1 When connecting units that support 32 connected units, two units are recognized as one unit and the maximum number of connections will be lower.
*2 The communication code is set using the rotary switch.Furthermore, you can also make use of power monitoring unit addresses 1 to 99 for Modbus RTU.
The communication will be invalid when the communication code is set at "00."

[UM05-AC3]

● Measurement specifications

Item		Measurement range	Accuracy *1
Voltage	3-phase line voltage *2 (Vuv, Vvw, Vwu)	85 to 264V	Vuv,Vvw: ±1.0% FS Vwu: ±2.5% FS
Current	3-phase current (Ir, Is, It) *2	0.4 to 125% of rating (50 A CT: 0.4 to 100%, 100 A CT: 0.4 to 120%)	Ir, It: ±1.0% FS Is: ±2.5% FS
Active power *2	Reverse power flow is negative	According to current and voltage measurement range (Current × voltage × √3)	±1.0% FS
Reactive power *2	(Reactive power measurement method)	Same as above	±1.5% FS
Active electric energy *2	Forward active electric energy	Indicator: 6 digits	Equivalent to JIS regular grade 2.0% at power factor of 1.0 and rated current between 5 and 120% 2.5% at power factor of 0.5 and rated current between 10 and 120%
	Reverse power flow active electric energy		
Power factor	(Reactive power measurement method)	0 to ±1.000	±3.0% FS (Conversion by 90˚ phase angle)

*1 The accuracy performance excludes external CT and VT tolerance.
*2 Measurement is made after automatically determining 3-phase 3-wire, single-phase 3-wire, and single-phase 2-wire types. For single-phase 2-wire types, Vvw, Vwu, Is, and It are zero.
*3 Active power, reactive power, and active electric energy are measured at voltage: 85 to 264 V and current: 0.4% to 125%.

● SD memory card

Two types of data can be recorded on the SD memory card: one-hour interval and setting interval data.

Record measurement values		Recording interval	Remarks
1-hour interval	Max. value: Ir, It, Vuv, Vvw Avg. value: Ir, It, Vuv, Vvw Min. value: Ir, It, Vuv, Vvw Period value [difference]: electric energy (watt-hours) Reverse power flow electric energy (watt-hours)	1-hour (fixed)	Saves in single-day units in CSV file format. (1 month of data is about 1 MB) The internal memory can retain 35 days of data when not using a memory card. *1, *2
Setting interval	Max. value: Ir, It, Vuv, Vvw Avg. value: Ir, Is, It, Vuv, Vvw, Vwu, kW, kvar Min. value: Ir, It, Vuv, Vvw Period value [difference]: electric energy (watt-hours), reverse power flow electric energy (watt-hours) Instantaneous value: cosϕ	Select 1, 2, 5, 6, 10, 15, 20, 30 (minutes), or "Do not record". (The factory default is "Do not record".)	Saves in single-day units in CSV file format. (1 month of data is a max. of 9 MB) Records only when mounted with a memory card. You need to use the dedicated indicator to change the setting interval. An ERR LED will flash if you attempt to set the fixed recording interval without first mounting a memory card. *1, *2

(Note 1) An SD card is not included. Customers should purchase an SD or SDHC card with a capacity of 32 GB or smaller.
(Note 2) The recording interval is based on the time of the internal clock. To adjust the clock time, a separately sold indicator is required.
*1 The maximum and minimum values are determined from the measurement values of each cycle of the commercial frequency (50/60 Hz).
*2 When accessing the SD card, do not dismount and remount it or turn off the control power.

Power Monitoring Equipment
Power monitoring unit F-MPC04E (UM05)

■ Dimensions, mm

・UM05-AR3

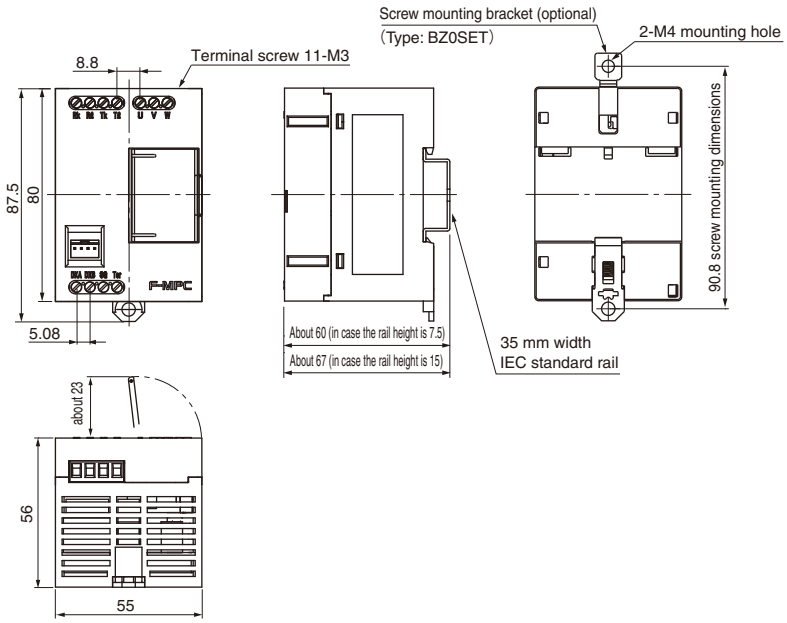

・UM05X-S

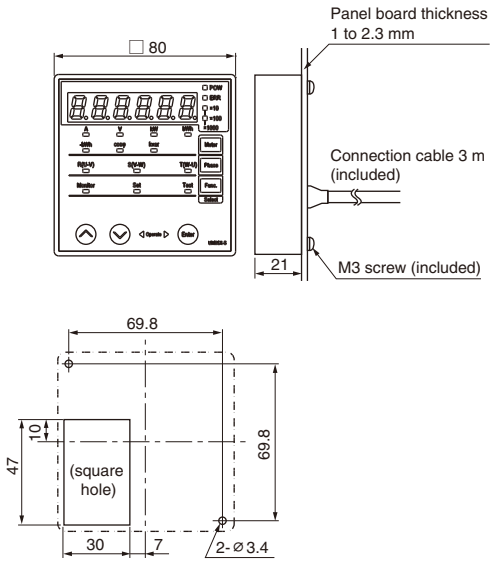

Mounting drilling dimensions
(View from panel surface)

・UM05-AC3

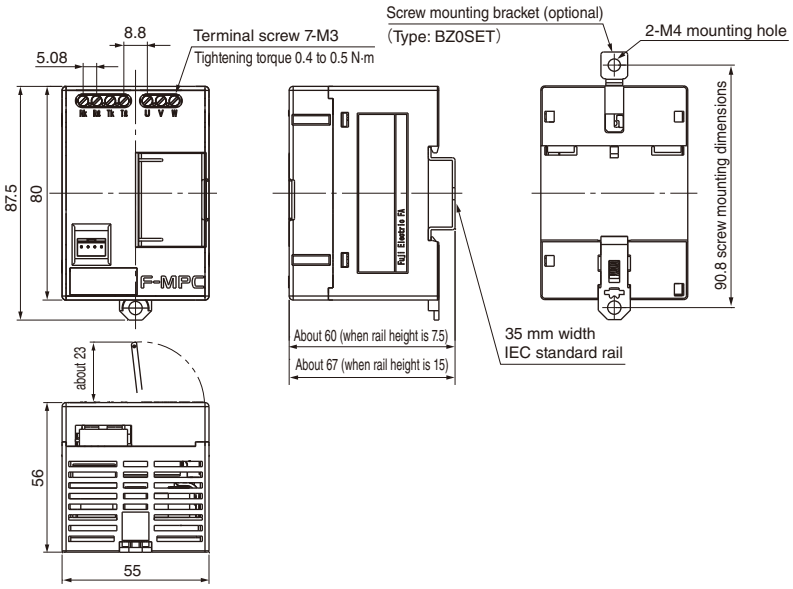

■ Features

You can implement on/off state monitoring and capture pulse signal measurements, alarm relay output, and flow meter data for energy monitoring systems that utilize the F-MPC-Net communication protocol.

- The DI/DO unit can input on-off signals, count accumulated pulse values, and control the on-off state of the relay output.
- 2-wire RS-485 communication enables the unit to transmit the input state to the host and control relay output based on on-off directives from the host.

■ Models and Types

Part name	Specifications	Type
DI/DO unit	6 inputs (contact or transistor input) 4 relay outputs (250 V AC, 1 A)	**UM11-D0604**

■ Specifications

● General specifications

Item		Specifications
Control power	Rating	100 to 240 V AC (permissible range: 85 to 264 V AC) 50/60 Hz (permissible range: 47 to 63 Hz)
	Consumer VA	Max. 8.5VA
	Inrush current	20A or less
Ambient temperature		-10 to 55℃
Storage temperature		-20 to 70℃
Relative humidity		20 to 90% RH (no condensation)
Usage atmosphere		No corrosive gas or excessive dust.
Protective structure		IP20
Insulation resistance		10 MΩ or higher between control power terminals and other terminals
Power frequency withstand voltage		2,000 V AC for 1 minute between control power terminals and other terminals
Noise resistance		1 to 1.5 MHz; Peak voltage: 2.5 to 3 kV damping oscillation waveform (2 s) Continuous application of 1 ns × 1 μs 1.5 kV square wave noise for 10 minutes Burst Control power: 2 kV; Communication line: 1 kV Surge: Control power: 2 kV; Communication line: 1 kV
Electrostatic noise immunity		Gap discharge: 8 kV, contact discharge (housing): 4 kV
Shock resistance		294 m/s2 [30G] 3-direction 3-times each (Ensure no 2-way malfunction at 147 m/s2 [15G])
Vibration resistance		19.6 m/s2, 16.7 Hz, 30 minutes in each X, Y, Z direction
Permissible instantaneous power failure time		20 ms (continuous operation)
Mounting method		Screw mounting, IEC 35 mm rail mounting
Mass [g]		250g

● Input/output specification

(1) DI

It has 6 DI points and can read on-off states and count pulses. Among the 6 points, 2 points can count pulse widths of 10 ms or higher, and the other 4 points can count pulse widths of 50 ms or higher.

Transmits on-off states via communication. Furthermore, the number of counted pulses can be transmitted via communication.

Item	Specifications	Remarks
Digital input type	Contact or transistor input	With service power voltage constantly applied
Minimum input signal width	10 ms: in1 and in2 50 ms: in3 to in6	For pulse input, ON and OFF periods must be greater than or equal to the minimum input signal width.
Operating time measurement	Time tolerance ±1.0% (Min. ±1 s)	Integrates total ON time in seconds
ON current	ON at 4 mA or higher	When ON, a current of approx. 5 mA is applied.
OFF current	OFF when less than 1 mA	
Internal circuit	Input circuit per point 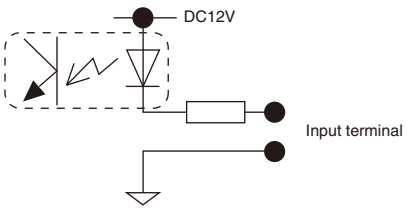 	The IN1 and IN2 input terminals have 2 terminals per point. IN3 and IN4 are common. IN5 and IN6 are likewise common. The GND terminal is commonly connected internally.

Power Monitoring Equipment
F-MPC I/O unit

Circuit configuration diagram

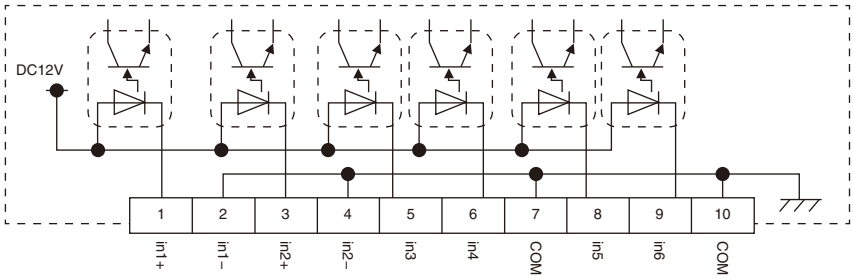

(2) DO
It has 4 DO points and can implement on-off output control via communication.

Item	Specifications	Remarks
Digital output type	Relay output (NO contact)	Card relay RB 105 equivalent
Continuous rated thermal current	250 V AC, 1 A (continuous rated thermal current)	
Max. operating cycles per hour	1,800 cycles/hour	
Make/break durability	600,000 cycles [220 V AC, 1 A resistive load] 200,000 cycles [220 V AC, 1 A inductive load] 900,000 cycles [110 V AC, 1 A resistive load] 300,000 cycles [110 V AC, 1 A inductive load] 600,000 cycles [24 V DC, 1 A resistive load] 120,000 cycles [24 V DC, 1 A inductive load]	1,800 operating cycles per hour, current carrying factor of 40% Under inductive load, time constant L/R = 15 ms
Internal circuit	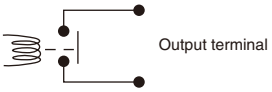 Output terminal	The output terminals have 2 terminals per point.

D1

● Communication specification

Item		Specifications	
		F-MPC-Net	Modbus RTU
Standard		EIA-485	
Transmission method		Half duplex two-wire type	
Data exchange method		1:N (main unit) polling/selecting	
Transmission distance		1,000 m (total length)	
Number of connection units		Maximum 64 units/1 system (however, the host device is included in the 64 units) (Note 1)	
Transmission speed		4800/9600/19200/38400 bps (selectable)	
Station address setting		1 to 99 (Note 2)	
RS485 terminal names		DXA,DXB	Connect by reading DXA as D1 (+) and DXB as D0 (-).
Transmission character		ASCII code	Binary
Data type	Start bit	1 bit (fixed)	1 bit (fixed)
	Data length	7 bits / 8 bits (select)	8 bit (fixed)
	Parity bit	None / Even number / Odd number (select)	None / Even number / Odd number (select)
	Stop-bit	1 bit (fixed)	No parity: 2 bits (fixed) Others: 1 bit (fixed)
	BCC	Even number horizontal parity	CRC-16

(Note 1) When including units that support 32 connected units, the maximum number of connections will be lower.
(Note 2) The communication code is set using the rotary switch. Furthermore, you can also make use of main unit addresses 1 to 99 for Modbus RTU. The communication will be invalid when the communication code is set at “00.”

■ Dimensions, mm

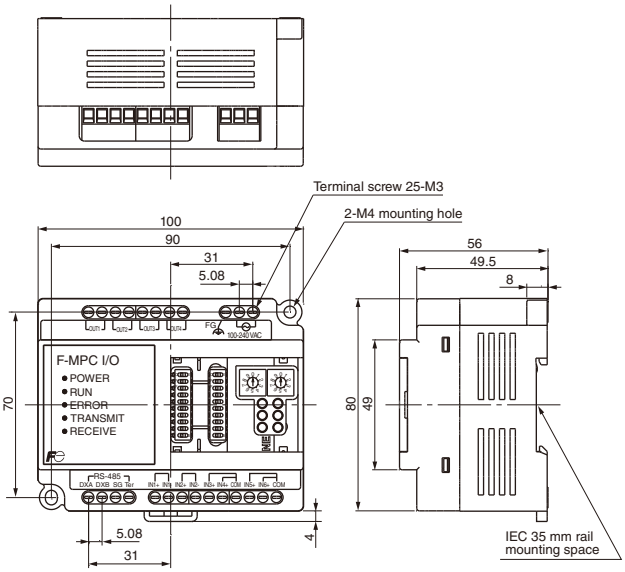

■ Wiring diagram

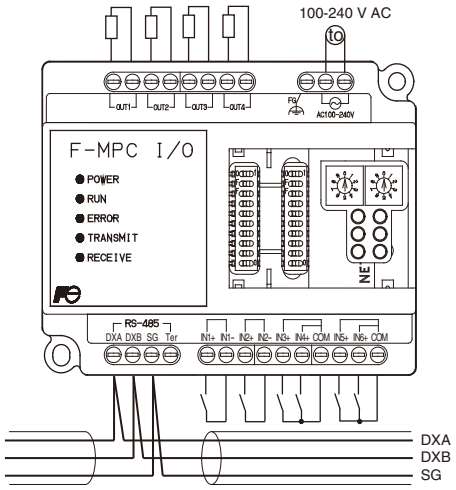

Fuji Electric FA Components & Systems Co., Ltd.
Information subject to change without notice

ZCT Equipped Breakers

■ Features

By combining the breaker with a centralized power distribution monitoring unit (type: UM04) or single-circuit power monitoring unit with leakage current meter (type: UM03-ARA3G), you can easily construct a leakage current monitoring and cutoff system.

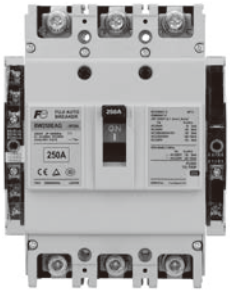

(Photo No. KKD10-049)

■ Specifications

Frame (AF)				125		250		400		630	800
Basic type				**BW125JAZ**	**BW125RAZ**	**BW250JAZ**	**BW250RAZ**	**BW400SAZ**	**BW400RAZ**	**BW630RAZ**	**BW800RAZ**
No. of poles and elements				3P3E		3P3E		3P3E		3P3E	3P3E
Rated insulation voltage Ui [V]			AC	690		690		690		690	690
Rated impulse withstand voltage Uimp [kV]				6		6		6		6	6
Rated current In [A] Reference temperature 40°C				15, 20, 30, 40, 50, 60, 75, 100, 125		125, 150, 160, 175, 200, 225, 250		250, 300, 350, 400		500, 600, 630	700, 800
Rated frequency (Hz)				50-60							
Rated breaking capacity [kA]	JISC8201-2-1 Ann2 [Icu]	AC	440/415/400/380 V	30	50	30	50	36	50	50	50
			240/230V	50	100	50	100	85	100	100	100
Isolation compliance				Compliant							
Reverse connection				Yes							
Selectivity classification				Cat.A							
Dimensions [mm] 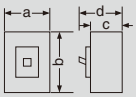			a	115		130		178		248	248
			b	155		165		257		275	275
			c	68		68		103		103	103
			d	95		95		146		146	146
Product mass [kg]				1.5		2		6.2		9.5	10
Connection method	Front mounting type			(Screw terminal)		(Screw terminal)		(Flat terminal)		(Flat terminal)	(Flat terminal)
	Rear connection type		X								
	Flush mounting		E								
Standard option accessory [1]	Auxiliary switch		W	●		●		●		●	●
	Alarm switch		K	●		●		●		●	●
	Shunt trip device		F	●(3)		●(3)		●(4)		●(4)	●(4)
	Test terminal		T_1, T_2	●		●		●		●	●
	ZCT output		Z_1, Z_2	●		●		●		●	●
Compliance	Electrical Appliances and Material Safety Act			Specified electrical product [2] PSE		Not applicable					
	JISC8201-2-1			Self-declared compliance							
	IEC60947-2			–							
	EN60947-2 (CE marking)			–							
Overcurrent tripping mechanism				Thermal-magnetic type							
Trip button				Yes							

●Standard accessories
(Note 1) Comes standard with an auxiliary alarm switch and shunt trip device. Terminal block type only. There are no lead wire types.
(Note 2) Only units with a rated current of 125 A are excluded.
(Note 3) Specify a voltage rating of either 100-120 V AC/100-110 V DC or 200–240V AC/200–220 V DC.
(Note 4) Can be used at a voltage rating of 100–240 V AC/100–220 V DC.

Power Monitoring Equipment
Related equipment

■ Dimensions (Front mounting type), mm

BW125JAZ,BW125RAZ

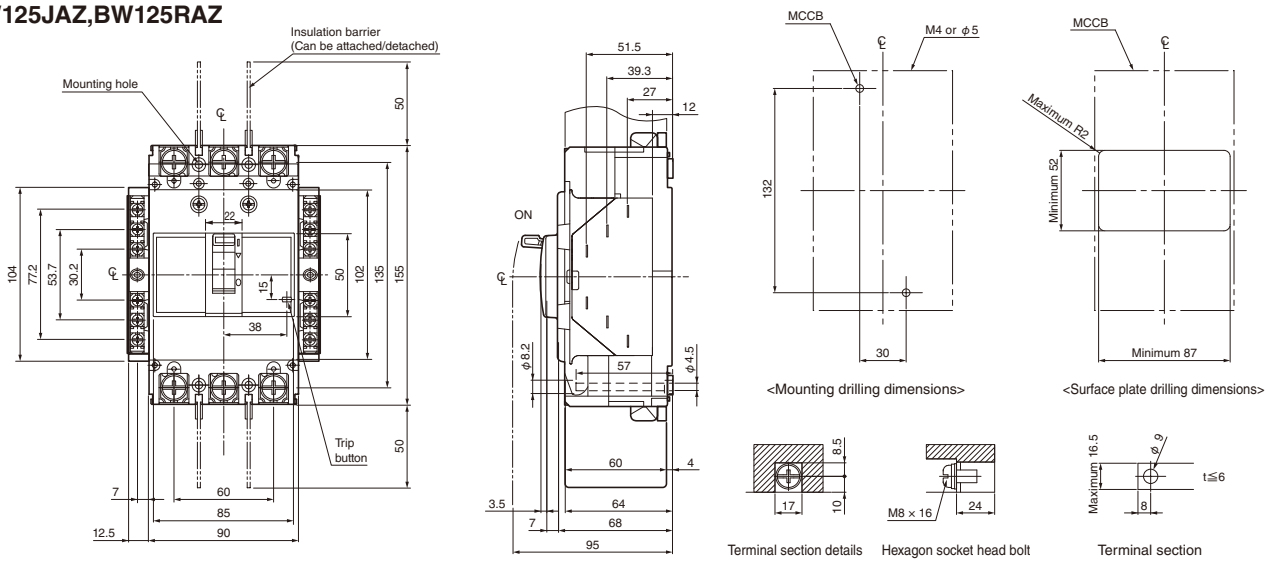

BW250JAZ,BW250RAZ

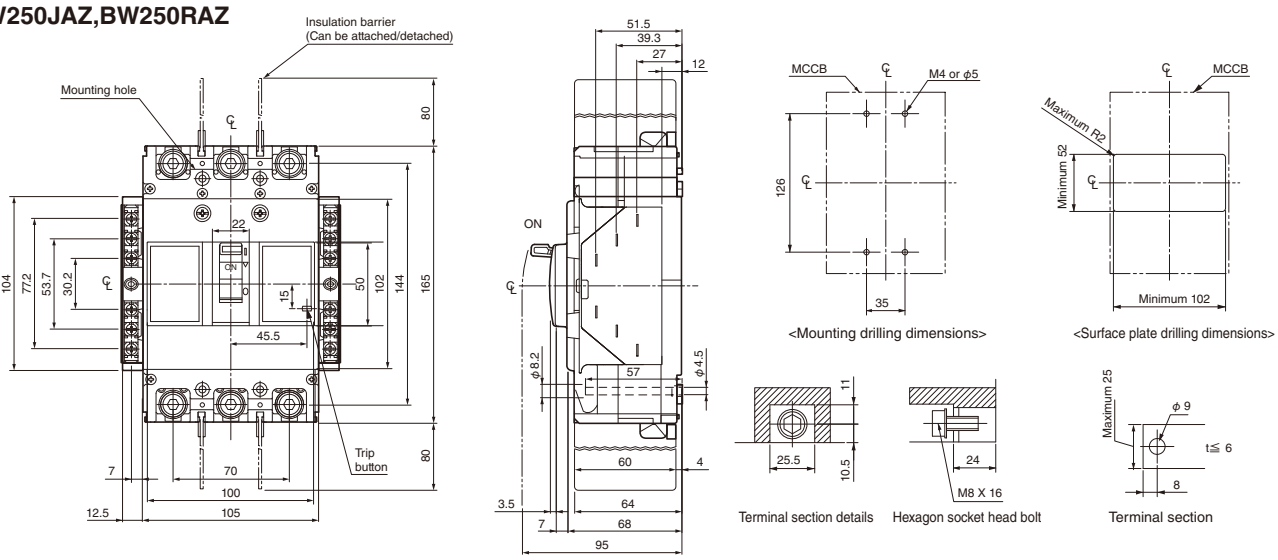

BW400SAZ,BW400RAZ

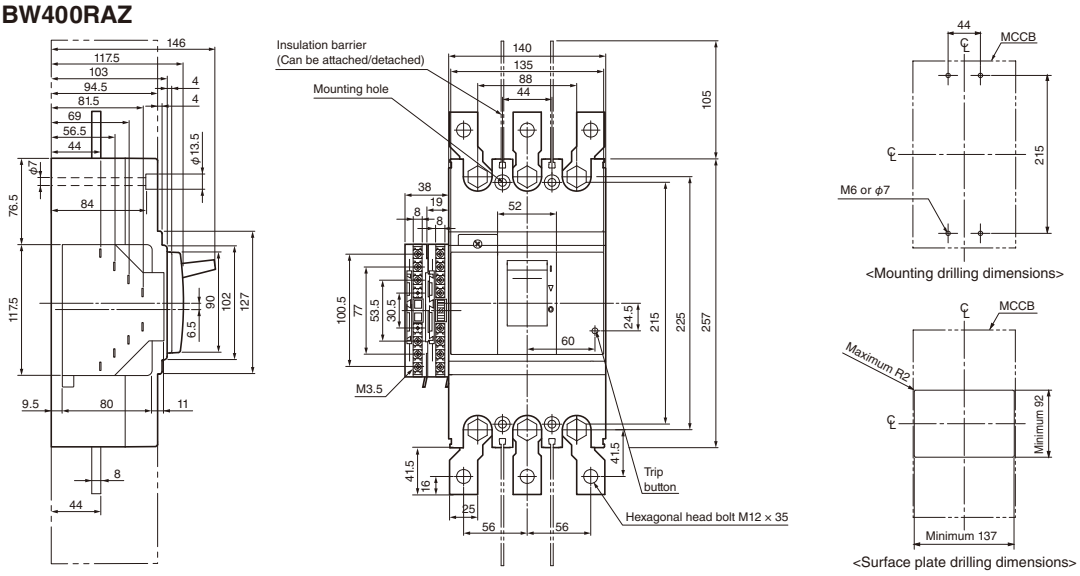

BW630RAZ

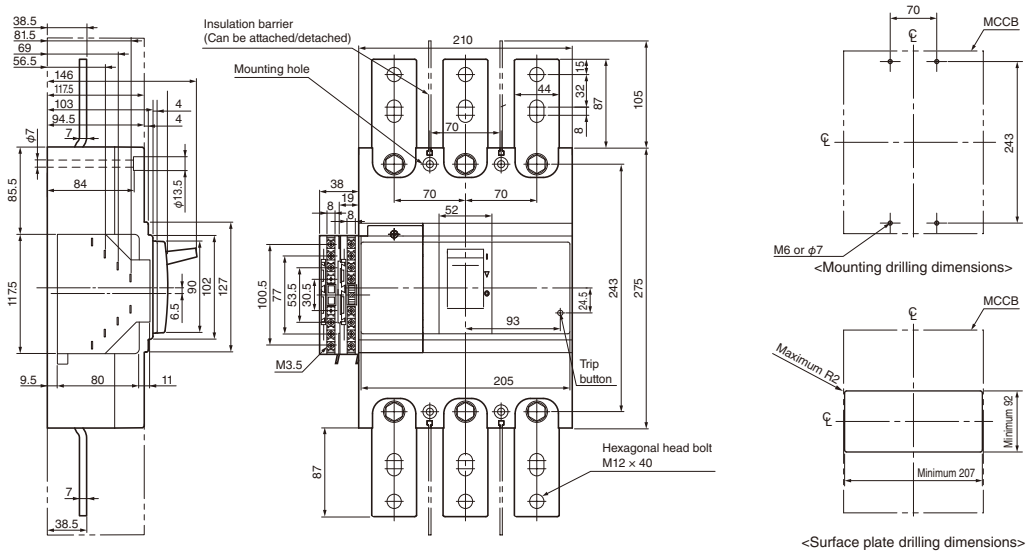

BW800RAZ

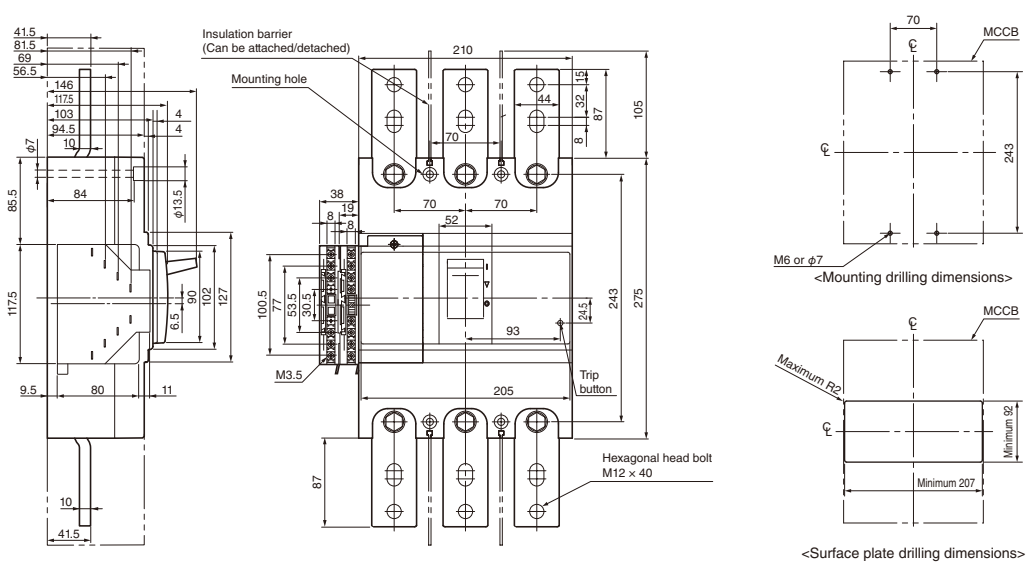

●Terminal arrangement diagram

BW125JAZ,BW125RAZ,
BW250JAZ,BW250RAZ

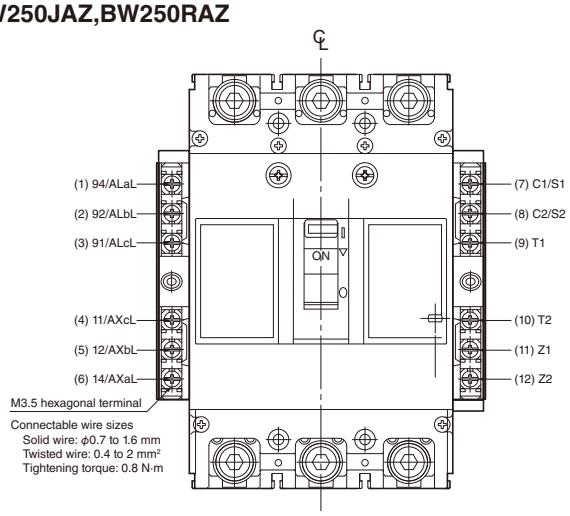

BW400SAZ,BW400RAZ,
BW630RAZ,BW800RAZ

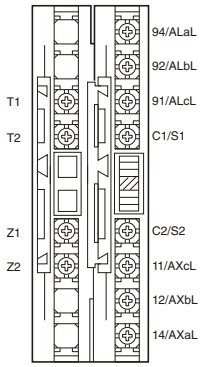

Zero-phase current transformer

● Specifications

Model (low voltage)		Type	Rated current [A]	Hole-through diameter (ϕ)	Hole-through cable 1ϕ2W	1ϕ3W, 3ϕ3W	3ϕ4W	Case color	Mass (approx.) [kg]
Hole-through type	Standard product	**RM112-ZCT3005**	50	30	IV 14 mm²	IV 8 mm²	IV 8 mm²	Black (phenol)	0.14
		RM112-ZCT3010	100	30	IV 60 mm²	IV 50 mm²	IV 38 mm²	Black (phenol)	0.14
		RM112-ZCT4220	200	42	IV 100 mm²	IV 80 mm²	IV 60 mm²	Black (phenol)	0.22
		RM112-ZCT5830	300	58	IV 125 mm²	IV 100 mm²	IV 80 mm²	Black (phenol)	0.42
		RM112-ZCT7040	400	70	IV 400 mm²	IV 325 mm²	IV 250 mm²	Black (phenol)	0.54
		RM112-ZCT7060	600	70	IV 400 mm²	IV 325 mm²	IV 250 mm²	Black (phenol)	0.54
		RM112-ZCT9060	600	90	IV 500 mm	IV 500 mm	IV 500 mm	Black (epoxy)	2.0
		RM112-ZCT9080	800	90	IV 500 mm²	IV 500 mm²	IV 500 mm²	Black (epoxy)	2.0
		EW-Z115	1200	115	–	–	–	Gray (epoxy)	4.8
		EW-Z160	2000	160	–	–	–	Gray (epoxy)	10
		EW-Z250	3000	250	–	–	–	Gray (epoxy)	28.5
	Split type	**EW-ZD30**	100	30	IV 60 mm²	IV 50 mm²	IV 38 mm²	Black (phenol)	0.55
		EW-ZD45	200	45	IV 125 mm²	IV 100 mm²	IV 80 mm²	Black (phenol)	0.89
		EW-ZD65	400	65	IV 325 mm²	IV 250 mm²	IV 200 mm²	Black (phenol)	1.15

Model (low voltage)		Type	Rated current [A]	Hole-through diameter (ϕ)	Hole-through conductor 3ϕ3W	3ϕ4W	Case color	Mass (approx.) [kg]
Conductor equipped	3 poles	**EW-Z3B40**	400	70	5 × 40 mm	–	Black (phenol)	2.8
		EW-Z3B50	500	70	6 × 40 mm	–	Black (phenol)	3.1
		EW-Z3B60	600	90	6 × 50 mm	–	Black (epoxy)	7.0
		EW-Z3B80	800	90	8 × 50 mm	–	Black (epoxy)	8.0
		EW-Z3B100	1000	90	12 × 50 mm	–	Black (epoxy)	11.0
		EW-Z3B120	1200	115	10 × 75 mm	–	Gray (epoxy)	15.2
		EW-Z3B160	1600	160	12 × 100 mm	–	Gray (epoxy)	30.5
		EW-Z3B200	2000	160	6 × 100 mm × 2	–	Gray (epoxy)	30.5
		EW-Z3B300	3000	250	8 × 150 mm × 2	–	Gray (epoxy)	68.6
	4 poles	**EW-Z4B40**	400	90	–	5 × 40 mm	Black (epoxy)	6.0
		EW-Z4B50	500	90	–	6 × 40 mm	Black (epoxy)	6.5
		EW-Z4B60	600	90	–	6 × 50 mm	Black (epoxy)	9.0
		EW-Z4B80	800	90	–	8 × 50 mm	Black (epoxy)	11.0
		EW-Z4B100	1000	115	–	12 × 50 mm	Gray (epoxy)	15.5
		EW-Z4B120	1200	115	–	10 × 75 mm	Gray (epoxy)	24.9
		EW-Z4B160	1600	160	–	12 × 100 mm	Gray (epoxy)	36.4
		EW-Z4B200	2000	160	–	6 × 100 mm × 2	Gray (epoxy)	36.4
		EW-Z4B300	3000	250	–	8 × 150 mm × 2	Gray (epoxy)	80.3

*Make sure to twist the ZCT secondary wire (estimated twisting: 1 twist/5 cm) and separate the wire from the power cable.

● Dimensions, mm

RM112-ZCT3005, ZCT3010, ZCT5830

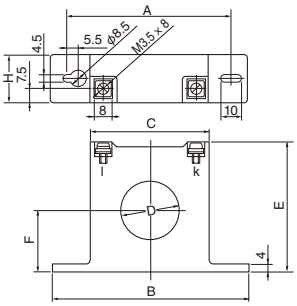

Dimensions [mm] / Types & ratings	A	B	C	D	E	F	G
RM112-ZCT3005	83	100	60	ϕ30	67.5	32	25
RM112-ZCT3010							
RM112-ZCT5830	119	136	96	ϕ58	98	50	30

RM112-ZCT7040, ZCT7060

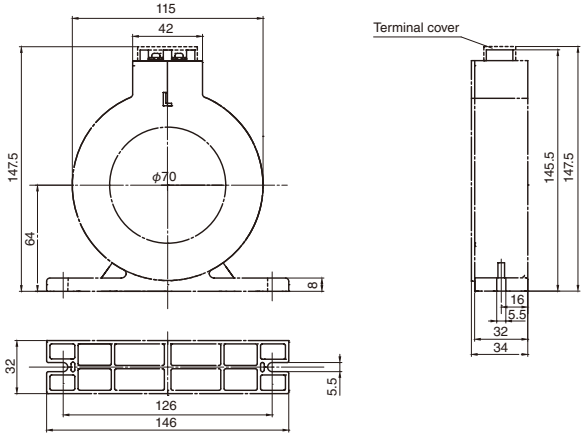

RM112-ZCT4220

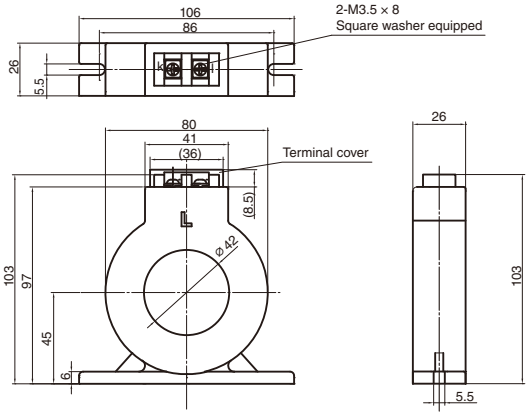

RM112-ZCT9060
RM112-ZCT9080

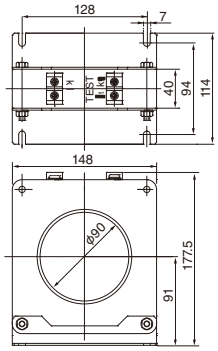

EW-Z115, 160, 250

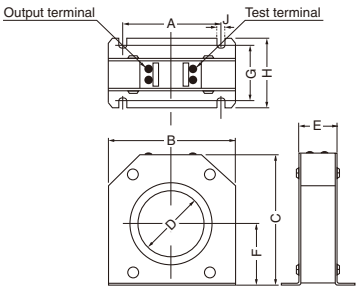

Dimensions [mm] / Type	A	B	C	D	E	F	G	H	J
EW-Z115	168	220	232	ϕ115	56	112	98	120	7
EW-Z160	170	270	275	ϕ160	70	137	110	128	10
EW-Z250	320	400	403	ϕ250	120	203	160	194	13

EW-ZD30

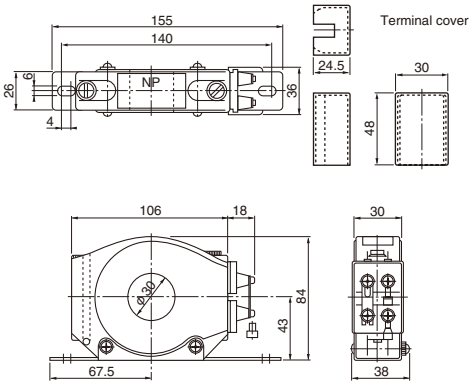

EW-ZD45, ZD65

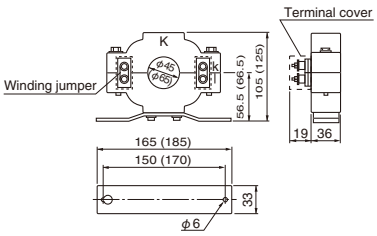

*The dimensions in parentheses ( ) correspond to the EW-ZD65.

EW-Z3B40,Z3B50

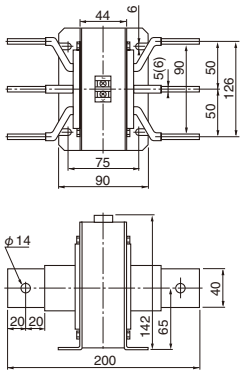

*The dimensions in parentheses ( ) correspond to the EW-Z3B50.

Power Monitoring Equipment
Related equipment

EW-Z4B40, Z4B50

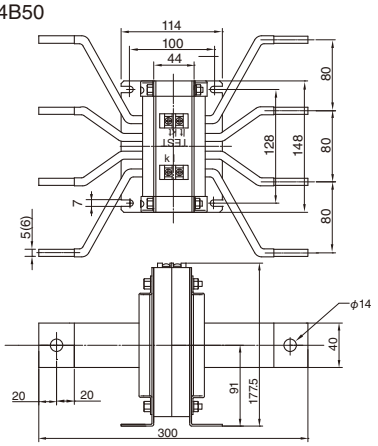

*The dimensions in parentheses ( ) correspond to the EW-Z4B50.

EW-Z3B60, Z3B80, Z3B100

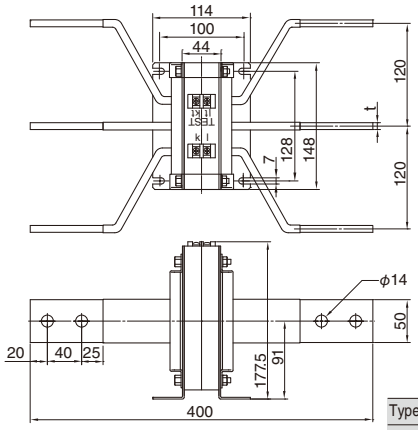

Type	EW-Z3B60	EW-Z3B80	EW-Z3B100
t	6	9	12

EW-Z4B60, Z4B80

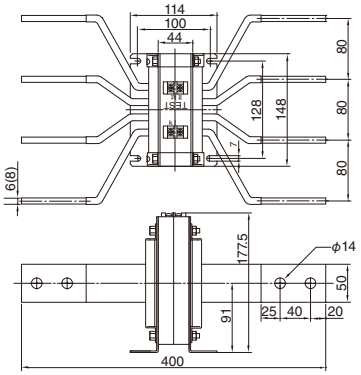

*The dimensions in parentheses ( ) correspond to the EW-Z4B80.

Z4B100

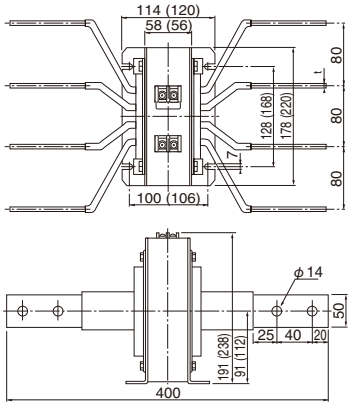

EW-Z3B120, Z3B160

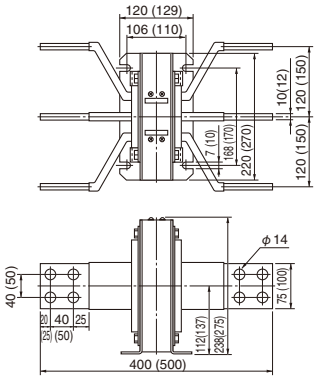

*The dimensions in parentheses ( ) correspond to the EW-Z4B160.

EW-Z4B120, Z4B160

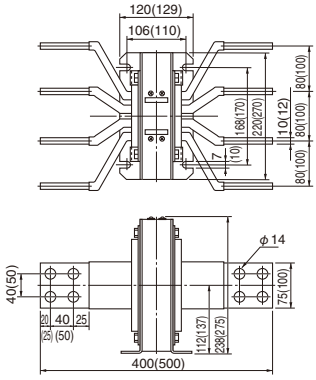

*The dimensions in parentheses ( ) correspond to the EW-Z3B160.

EW-Z3B200, Z3B300

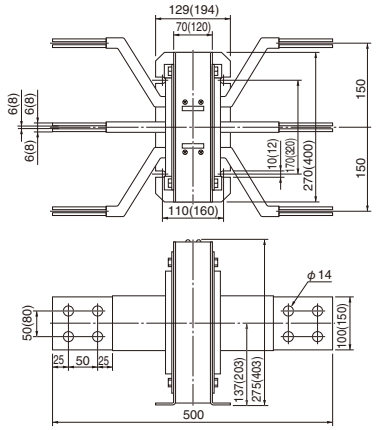

*The dimensions in parentheses ( ) correspond to the EW-Z3B300.

EW-Z4B200, Z4B300

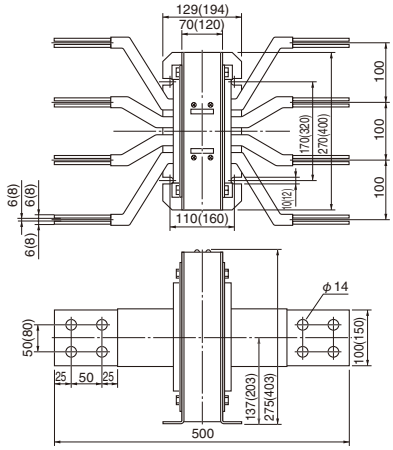

*The dimensions in parentheses ( ) correspond to the EW-Z4B300.

Fuji Electric FA Components & Systems Co., Ltd.
Information subject to change without notice

F-MPC04P (type: UM02A), F-MPC04S (type: UM03), F-MPC04E (type: UM05) combination CT

■ Features

- A split-type CT can be mounted without disconnecting existing cables, making it ideal for measuring and monitoring the electric energy of existing circuits.
- We also offer a hole-through type CT as a low-cost version that can be used for measuring and monitoring the electric energy of new circuits.

■ Models and Types

● F-MPC04P (type: UM02A), single-circuit F-MPC04S (type: UM03), F-MPC04E (type: UM05) combination CT

A combination CT is a dedicated CT. General-purpose CT (secondary rated current 5 A or 1 A) cannot be directly connected. Otherwise, damage may occur.

Models	Small split type		Square split type				Round through type	
	Fig. 1	Fig. 1	Fig. 2	Fig. 3	Fig. 4	Fig. 5	Fig. 6	Fig. 7
Type	**CC2D81-0057**	**CC2D81-0506**	**CC2D71-1004**	**CC2D65-2008**	**CC2D54-4009**	**CC2D52-8009**	**CC2B65-2008**	**CC2B54-4009**
Rated primary current	5A	50A	100A (only F-MPC04S not applicable)	200A	400A	800A (only F-MPC04S not applicable)	200A	400A
Linearity output limit	According to the main unit measurement range							
Rated secondary current	7.34 mA	73.4 mA	33.33 mA	66.67 mA	133.33 mA		66.67 mA	133.33 mA
Through hole diameter	ϕ10		ϕ16	ϕ24	ϕ36	ϕ60	ϕ24	ϕ36
Rated frequency	50Hz/60Hz							
Excessive electric current resistance amount	10 In/continuous	10 In/1 sec.	40 In/1 sec.				1.2 In/continuous 40 In/1 sec.	
Rate error	±1%/In ±1.5%/0.2 In					±1%/In ±1.5%/0.3 In	±1%/In ±1.5%/0.2 In	
Phase difference	150 min. ±90 min./In, 180 min. ±120 min./0.2 In		1±1°/In 1±1.5°/0.2 In	±60 min./In ±90 min./0.2 In				
Rated load	0.2693 mVA (Load resistance 5 Ω)	26.93 mVA (Load resistance 5 Ω)	11.1 mVA (Load resistance 10 Ω)	44.4 mVA (Load resistance 10 Ω)	0.18 VA (Load resistance 10 Ω)	0.177 VA (Load resistance 10 Ω)	44.4 mVA (Load resistance 10 Ω or less)	177.8 mVA (Load resistance 10 Ω or less)
Insulation resistance	DC500V/100MΩ or more (Between the core and the output lead line)						DC500V/100MΩ or more (Between the through hole and the output lead line)	DC500V/100MΩ or more (Between the through hole and the output terminal)
Dielectric strength	2000 V AC/1 min. (Between the core and the output lead line)						2500 V AC/1 min. (Between the through hole and the output lead line)	2500 V AC/1 min. (Between the through hole and the output terminal)
Output protective device	7.5 Vp built-in clamping diode			3 Vp built-in clamping diode			-	
Usage ambient conditions	-20 to 75°C 80%RH or less No condensation							
Method for fixing a divided portion	Clamp						-	
Main body mounting method	Hanger						-	
Connection	Heat-resistance vinyl electric wire 0.3 mm² (AWG22) × 1,000 mm			Heat-resistance vinyl electric wire 0.75 mm² (AWG18), 1,000 mm		Heat-resistance vinyl electric wire AWG18, 1,000 mm	Heat-resistance vinyl electric wire 0.3mm²×1,000 mm	M3 terminal block
Mass	about 45 g		about 80 g	about 200 g	about 300 g	about 500 g	about 60 g	about 180 g

*1 Type: CC2D81-0057 can be used alone or in combination with the secondary lines of existing general-purpose CT (10 A to 7500 A/5 A). Set the CT primary rated current by selecting from 10 to 7500 A.
*2 The single-circuit F-MPC04S (type: UM03) is not compatible with CC2D71-1004 and CC2D52-8009.

■ Dimensions , mm

Please also refer to the next page.

Fig. 1
CC2D81

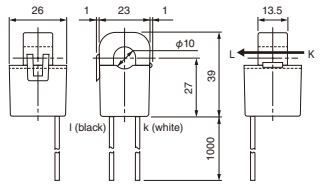

Fig. 2
CC2D71

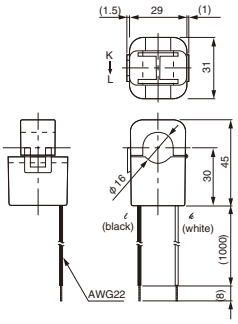

Fig. 3
CC2D65

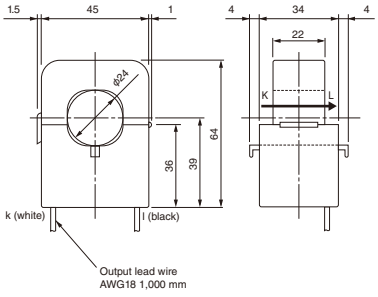

Fig. 4
CC2D54, CC2D74

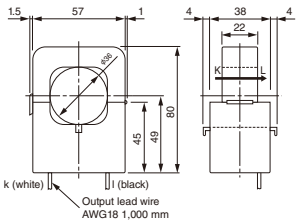

F-MPC04 (type: UM04) combination CT

■ Models and Types

● F-MPC04 (type: UM04) combination CT

A dedicated combination CT box (type: UM04X-1) is required when using in combination with the F-MPC04 (UM04).
Please note that the type of CT box will vary depending on the secondary current of the combination CT being used.

Models	Square split type			Round split type	
	Fig. 4	Fig. 4	Fig. 4	Fig. 8	Fig. 8
Type	**CC2D74-1001**	**CC2D74-2001**	**CC2D74-4001**	**CC2C76-8001**	**CC2C76-12X1**
Rated primary current	100A	200A	400A	800A	1,200A
Linearity output limit	According to the main unit measurement range				
Rated secondary current	1 A				
Through hole diameter	ϕ36			ϕ60	
Rated frequency	50Hz/60Hz				
Excessive electric current resistance amount	1.0 In/continuous 40 In/1 sec.				
Rate error	±1%/In ±1.5%/0.2 In			±1%/In ±1.5%/0.2In ±3%/0.05 In	
Phase difference	90±90 minutes/In	60±60 minutes/In	±80 minutes/In	±80 min./In, ±100 min./0.2 In	
Rated load	0.5 VA (Load resistance 0.5 Ω)				
Insulation resistance	500 V DC/100 MΩ or higher (Between the core and the output lead line)			DC500V/100MΩ or more (Between the through hole and the output lead line)	
Dielectric strength	2000 V AC/1 min. (Between the core and the output lead line)			2500 V AC/1 min. (Between the through hole and the output lead line)	
Output protection	±1.4 Vp built-in clamping diode				
Usage ambient conditions	–20 to 75°C 80%RH or less No condensation				
Method for fixing a divided portion	Clamp				
Main body mounting method	Hanger				
Connection	Heat-resistance vinyl electric wire 0.75 mm² (AWG18) × 1,000 mm			VCTF 0.75 mm² × 1,000 mm 2-core	
Mass	300 g			500 g	
Combination CT box	UM04X-1			UM04X-1	

*UM04X-5 is the CT box to use when combining with a general-purpose CT (10 to 7500 A/5 A).

■ Dimensions , mm

Fig. 5
CC2D52

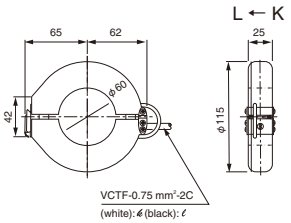

Fig. 6
CC2B65

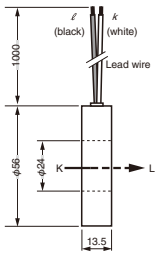

Fig. 7
Model CC2B54

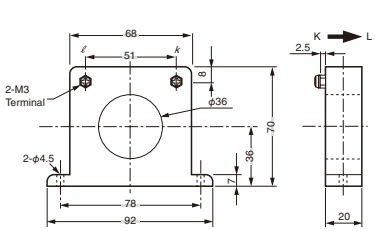

Fig. 8
CC2C76-□□□□

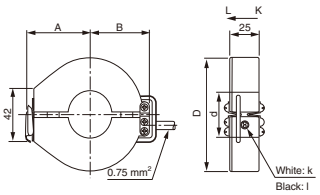

A	B	φD	φd
65	62	115	60

Terminal relay RS16

■ Description

The RS16 relay, in combination with F-MPC04 (type: UM01) power monitoring unit, outputs the current prealarm signal and leakage current pre alarm signal, and the signal to trip circuit breakers.

■ Specifications

Type		RS16-DE04H
No. of connectable circuits		5
Operate time		10ms or less
Release time		10ms or less
Vibration	Malfunctions durability	10–55Hz 1mm double amplitude (0.61N max.)
	Mechanical durability	10–55Hz 1mm double amplitude (0.61N max.) 3 times in each X, Y, Z direction, total 18 times
Shock	Malfunctions durability	100m/s^2
	Mechanical durability	200m/s^2, 2 hours in each X, Y, Z direction, total 6 hours
Operating ambient temperature		-25 to 55°C(no icing or no condensation)
Operating ambient humidity		35 to 85%RH
Terminal screw size		M3
Tightening torque		0.5–0.7N • m
Mounting		Rail mounting (screw mounting also available)
Applicable crimp terminal		R1.25–3 (Max 6mm)
Applicable wire size		Max. 1.4mm dia.
LED color	Operation indication	Red
	Power source indication	Green
Coil surge suppressor		Diode
Max. No. of rely insertion		50
Insulation resistance (initial)		100MΩ (500V DC megger)
Dielectric strength	Between contact and coil	2000V AC, 1 minute
	Between same polarity contacts	1000V AC, 1 minute
	Between reverse polarity contacts	2000V AC, 1 minute
	between heteropolar coils	500V AC, 1 minute
Mass		200g

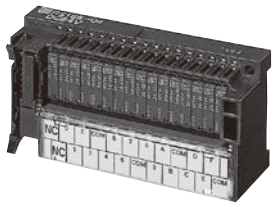

RS16-DE04H

■ Terminal arrangement

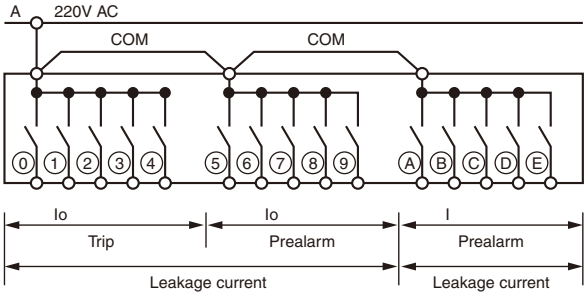

	3-phase 3-wire	3-phase 4-wire
0	:Io trip (No.1 or 6)	Io trip (No.1 or 4)
1	:Io trip (No.2 or 7)	Io trip (No.2 or 5)
2	:Io trip (No.3 or 8)	Io trip (No.3 or 6)
3	:Io trip (No.4 or 9)	Unused
4	:Io trip (No.5 or 0)	Unused
5	:Io prealarm (No.1 or 6)	Io prealarm (No.1 or 4)
6	:Io prealarm (No.2 or 7)	Io prealarm (No.2 or 5)
7	:Io prealarm (No.3 or 8)	Io prealarm (No.3 or 6)
8	:Io prealarm (No.4 or 9)	Unused
9	:Io prealarm (No.5 or 0)	Unused
A	:I prealarm (No.1 or 6)	I prealarm (No.1 or 4)
B	:I prealarm (No.2 or 7)	I prealarm (No.2 or 5)
C	:I prealarm (No.3 or 8)	I prealarm (No.3 or 6)
D	:I prealarm (No.4 or 9)	Unused
E	:I prealarm (No.5 or 0)	Unused
F	:Unused	Unused

■ Dimensions, mm

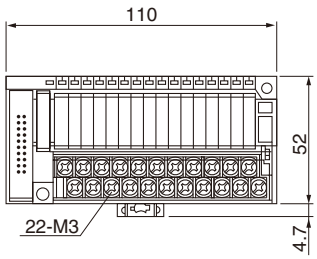

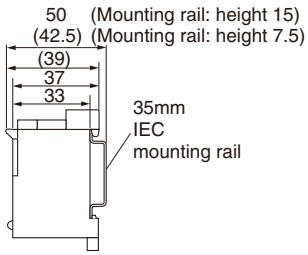

Panel drilling

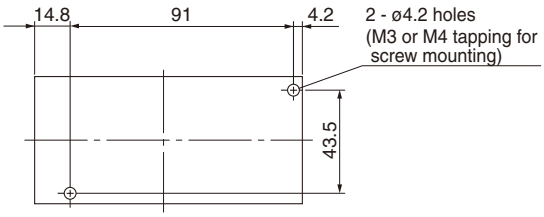

■ Connector cable

For connecting CT-BOX, Terminal relay RS16, and Connector terminal block AU-CW.

1m long	AUX014-201
2m long	AUX014-202
3m long	AUX014-203

Power Monitoring Equipment
AU-CW21B1

Connector terminal-block, AU-CW21B1

■ Description

The AU-CW21B connector terminal-block, in combination with the F-MPC04 (type: UM04) power monitoring unit, can output a kWh pulse.

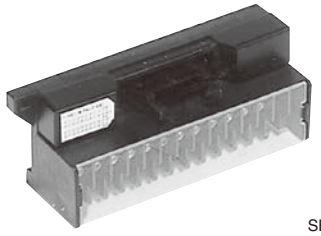

SB-277

AU-CW21B1

■ Specifications

Type	Front mounting	**AU-CW21B1-04**
Insulation voltage		60V AC/DC
Continuous current		1A (at 40˚C)
No. of terminals		21
No. of connectors		20
Terminal screw size		M3.5
Insulation resistance		100MΩ or more
Dielectric strength		500V 1min
Allowable ambient temperature		–5 to +40˚C
Allowable ambient humidity		45 to 85%RH
Flame resistance		UL94-V1
Connection cable	Multi-core cable	AUX014-20□ *
	Flat cable	AUX024-20□ *

Note: * Specify cable length by replacing □ with 1: 1m, 2: 2m, or 3: 3m.

■ Ordering information

Specify the following:
1. Type number

■ Terminal arrangement and output

		Pulse output circuit No.	Remarks
Terminal No.	23	Circuit 1 pulse output	Circuit 1 to 6 pulse outputs are valid in 3-phase 4-wire system.
	22	Circuit 2 pulse output	
	21	Circuit 3 pulse output	
	20	Circuit 4 pulse output	
	19	Circuit 5 pulse output	
	18	Circuit 6 pulse output	
	17	Circuit 7 pulse output	
	16	Circuit 8 pulse output	
	10	Circuit 9 pulse output	
	9	Circuit 10 pulse output	
	15, 2	Common (–)	

■ Dimensions, mm

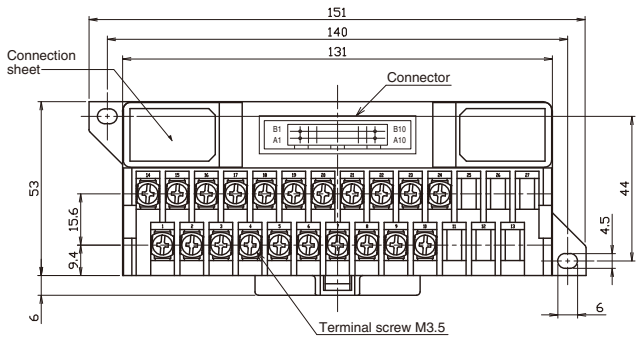

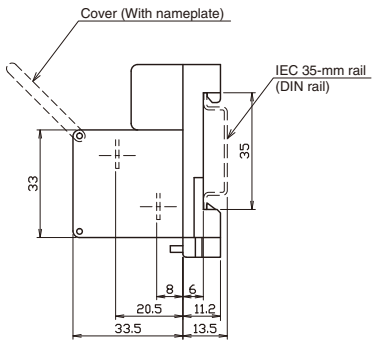

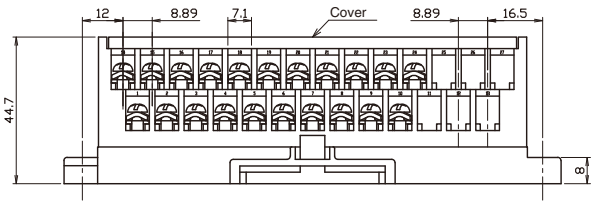

Fuji Electric FA Components & Systems Co., Ltd.
Information subject to change without notice

Popular type DIN 96 × 48 size

■ Discription

- High-luminance LEDs provide the unit with a vivid, high-performance display.
- Equipped with an “Auto-range” function for measuring DC voltage. This function eliminates the need to establish or configure ranges, enabling the unit to automatically adjust and configure a proper range for field measurements.
- Equipped with an easy-to-use “Setup” function. This function allows for speedy setup, thereby greatly contributing to reduction of labor hours.
- The unit utilizes a newly developed screw terminal block that prevents dropout.

Single

Multi

■ Type number nomenclature

WA4 □ □ □ - □ □ □

Power source

1	AC100 to 240V

Display

1	Single
2	Multi

Input

1	DC voltage measurement
2	DC high voltage measurement
3	DC current measurement
4	DC large current measurement
B	Process signal measurement

Test report

0	None
T	With

Comparative output

0	None
1	Relay contact output (2 steps)
2	Relay contact output (4 steps)
3	Photo-coupler output (2 steps)
4	Photo-coupler output (4 steps)

Option output (exterminal control is supplied as standard)

0	None (product only for display)
1	Analog output

■ List of products

● DC voltage measurement — Type: **WA4□□1-□□□**

Range	Measurement range	Display	Input impedance	Maximum allowable input
11	±199.99mV	Offset : -19999 to 99999 Full scale : -19999 to 99999	Approx. 10MΩ	±250V
12	±1.9999V			
13	±19.999V			
14	±199.99V			

● DC high voltage measurement — Type: **WA4□□2-□□□**

Range	Measurement range	Display	Input impedance	Maximum allowable input
15	±600.0V	Offset : -19999 to 99999 Full scale : -19999 to 99999	Approx. 10MΩ	±600V

● DC current measurement — Type: **WA4□□3-□□□**

Range	Measurement range	Display	Input impedance	Maximum allowable input
21	±199.99μA	Offset : -19999 to 99999 Full scale : -19999 to 99999	Approx. 1kΩ	±10mA
22	±1.9999mA		Approx. 100Ω	
23	±19.999mA		Approx. 10Ω	±50mA
24	±199.99mA		Approx. 1Ω	±500mA

● DC large current measurement — Type: **WA4□□4-□□□**

Range	Measurement range	Display	Input impedance	Maximum allowable input
25	±1.9999A	Offset : -19999 to 99999 Full scale : -19999 to 99999	Approx. 0.1Ω	±3A

● Process signal measurement — Type: **WA4□□B-□□□**

Range	Measurement range	Display	Input impedance	Maximum allowable input
1V	1 to 5V	Offset : -19999 to 99999 Full scale : -19999 to 99999	Approx. 1MΩ	±100V
2V	±5V			
3V	±10V			
2A	4 to 20mA		Approx. 10Ω	±50mA
3A	±20mA			

■ Dimensions, mm

Single Front view

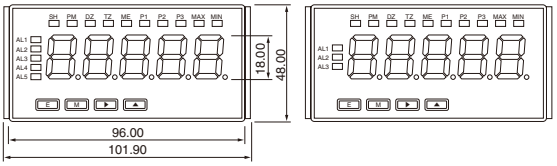

Multi Front view

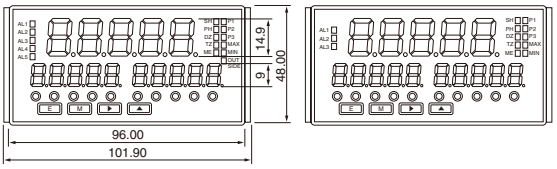

Top view

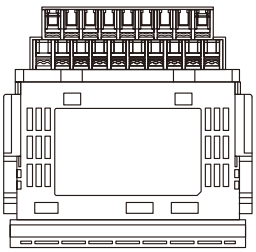

Right side view

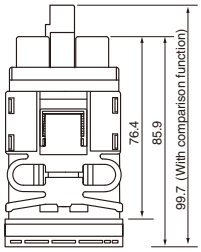

■ Panel cutting

(panel plate thickness 0.8 to 5.0mm)

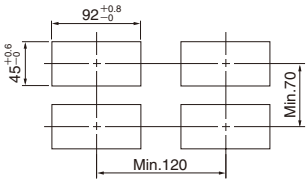

Digital Panel Meter WA4000 series

■ Parts name

Single display type

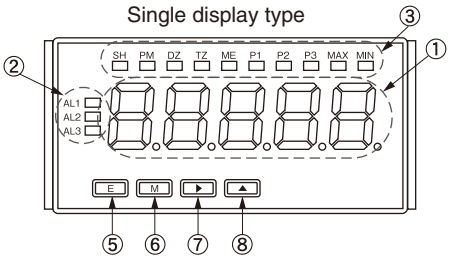

Multi display type

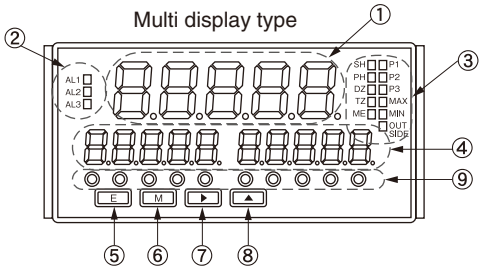

No.	Name		Main function
①	Main monitor		Displays the measurement values and the menu name and description when setting
②	Comparison value monitor		Displays the judgment results of the comparison warning function
③	Function operation light	SH	Lit during sample hold execution
		PH	Lit during peak hold/bottom hold/ peak-to-peak execution
		DZ	Lit during forced zero execution
		TZ	Lit during tracking zero execution
		ME	Lit while forced zero backup is ON
		P1	Patterns No. 1 to 8 are selected by combining P1, P2 and P3
		P2	
		P3	
		MAX	Blinks while the maximum value is displayed
		MIN	Blinks while the minimum value is displayed
		(OUTSIDE)	Lit while the maximum/minimum comparison judgment value is displayed on the sub monitor

No.	Name	Main function
④	Sub monitor	Displays the comparison setting values and the setting values when setting
⑤	Enter key	Switches the display or confirms the setting value Press and hold (3 seconds) to transition to setting mode
⑥	Mode key	Switches the display Switches between the measurement value display and % value display Press and hold (3 seconds) to transition to memory mode
⑦	Shift key	Switches the display Clears the comparison warning latch Press and hold (3 seconds) for forced zero
⑧	Increment key	Switches the display or selects the setting value Switches the measurement setting value display Press and hold (3 seconds) for pattern select
⑨	Comparison value setting key	Direct setting of comparison setting value

■ Common specifications

Input method : Single ended type
A/D conversion method : ΔΣ conversion method
Sampling speed : Maximum 250 samples/second
Display : Single display type
Main display area: Red/green 7-segment LED display (Character height: Approx. 18 mm)
Multi display type
Main display area: Red/green 7-segment LED display (Character height: Approx. 14.9 mm)
Sub display area: White 7-segment LED display (Character height: Approx. 9 mm)
Over-range warning : ovEr or -ovEr for input signals outside the display range
Decimal point : Settable to the desired position
Polarity display : Displayed automatically when the calculation result is negative
Display range : -19999 to 99999
Zero display : Leading zero suppressed
External control : Assign 4 of the functions below to the control terminal (user setting via the parameters)
(1) Pattern select (up to 8 patterns stored)
(2) Sample hold (3) Peak hold
(4) Forced zero (5) Relay reset
Operating temperature/ humidity : -5 to 50°C, 35 to 85% RH (no condensation)
Storage temperature/ humidity : -10 to 70°C, 60% RH or less
Power supply : AC power supply unit... AC 100 to 240 V ± 10% 50/60 Hz

Power consumption : 12 VA max (AC 100 V power supply), 15 VA max (AC 240 V power supply)
External dimensions : 96 mm (W) x 48 mm (H) x 85.9 mm (D)
* With comparison function: 99.7 mm (D)
Dielectric strength : Between power supply terminal and input terminal/external control/analog output terminal AC 2000 V for 1 minute
Between power supply terminal and comparison output terminal AC 1500 V for 1 minute
Between input terminal and COM/comparison output/analog output terminal AC 1500 V for 1 minute, between case and each terminal AC 2000 V for 1 minute
Insulation resistance : Between the terminals above DC 500 V 100 MΩ or higher
Installation location, altitude : Indoors, 2000 m or lower
Protective construction : IP66 (front)
Vibration resistance : 10 to 55 Hz One-way amplitude 0.15 mm; X, Y, Z direction 30 minutes
Mass : Approximately 250 g
Compliance standard : EN 61326-1 (EMS: Industrial installation/EMI: Class A), EN 61010-1 "Applicable to wiring length of 30 m or less"
Standard accessory : Terminal cover

Popular type DIN 96 × 48 size with 4.5-digit display

■ Discription

- Product with operating keys with no surface (provided on the front panel)
- Products with various functions and option outlets are available.

■ Features

- Small and thin size of 96 (W) × 48 (H) × 75 (D) mm
- Supports measurement of DC voltage and current, measurement of AC voltage and current, process signal measurement and temperature measurement (thermocouple and resistance temperature sensor) (multiple and wide range of measurements is possible (however, high voltage products and large current products are excluded))
- Display is in 4.5 digits and letter height is 14.2 mm using large and high-luminance red LED.
- Operation keys are of a surface-less type (provided on the front panel) and are optimum for general-purpose devices (scaling function, linearization function and external control function are built-in).

- BCD output product is available as an option (TTL output or open collector specification).
- Terminal: M3 screw (power source area and signal input area)
- All types conform to RoHS directive (lead-free).

■ Type number nomenclature

WA9 □ 1 □ − 0 □

Power source

1	AC100 to 240V
3	DC5 to 12V
4	DC12 to 24 V

Input

1	DC voltage measurement
2	DC current measurement
4	AC voltage measurement (true RMS value)
5	AC current measurement (true RMS value)
6	AC large current measurement (5A: true RMS value)
B	Process signal measurement
C	Temperature measurement (thermocouple)
D	Temperature measurement (resistance temperature sensor)
E	DC high voltage measurement (measurement of ±700 V)
F	AC high voltage measurement (700 V true RMS value)

Output (External control is supplied as standard.)

1	None (product only for displaying)
2	BCD output (TTL specification)
3	BCD output (open collector specification)

■ List of products

• DC voltage measurement Type: WA9□11-0□

Range	Measurement range	Display	Input impedance	Maximum allowable input
11	±199.99mV	Offset: ±19999 Full scale: ±19999	100MΩ	±50V
12	±1.9999V			
13	±19.999V		1MΩ	±250V
14	±199.99V			

(Note) Accuracy: ± (0.1% of rdg (displayed value) + 2 digit) (measurement conditions: 23°C ±5°C, 35 to 85% RH)

• DC current measurement Type: WA9□12-0□

Range	Measurement range	Display	Input impedance	Maximum allowable input
22	±1.9999mA	Offset: ±19999 Full scale: ±19999	10Ω	±50mA
23	±19.999mA			
24	±199.99mA		0.1Ω	±3A
25	±1999.9mA			

(Note) Accuracy: ± (0.2% of rdg (displayed value) + 3 digit) (measurement conditions: 23°C ±5°C, 35 to 85% RH)

• DC high voltage measurement Type: WA9□1E-0□

Range	Measurement range	Display	Input impedance	Maximum allowable input
15	±700.0V	Offset: ±19999 Full scale: ±19999	10MΩ	±700V

(Note) Accuracy: ± (0.1% of rdg (displayed value) + 3 digit) (measurement conditions: 23°C ±5°C, 35 to 85% RH)

• AC voltage measurement (display of true RMS value) Type: WA9□14-0□

Range	Measurement range	Display	Input impedance	Maximum allowable input
11	±199.99mV	Offset: ±19999 Full scale: ±19999	100MΩ	±50V
12	±1.9999V			
13	±19.999V		1MΩ	±250V
14	±199.99V			

(Note) 1. Accuracy: ± (0.2% of rdg (displayed value) + 20 digit) (measurement conditions: 23°C ±5°C, 35 to 85% RH) (applies to sine wave of 5% or more of full scale)
2. Response speed: Approx. 1 sec. (display of 10 to 90%)
3. Range of frequencies: 40 Hz to 1 kHz

Digital Panel Meter
WA9000 series

• AC high voltage measurement (display of true RMS value) Type: WA9□1F-0□

Range	Measurement range	Display	Input impedance	Maximum allowable input
15	700.0V	Offset: ±19999 Full scale: ±19999	100MΩ	700V

(Note) 1. Accuracy: ± (0.2% of rdg (displayed value) + 20 digit) (measurement conditions: 23°C ±5°C, 35 to 85% RH)
2. Response speed: Approx. 1 sec. (display of 10 to 90%)
3. Range of frequencies: 40 Hz to 1 kHz

• AC large current measurement (display of true RMS value) Type: WA9□16-0□

Range	Measurement range	Display	Input impedance	Maximum allowable input
26	5A	Offset: ±19999 Full scale: ±19999	CT (0.1Ω or less)	8A

(Note) 1. Accuracy: ± (0.5% of rdg (displayed value) + 20 digit) (measurement conditions: 23°C ±5°C, 35 to 85% RH) (applies to sine wave of 5% or more of full scale)
2. Response speed: Approx. 1 sec. (display of 10 to 90%)
3. Range of frequencies: 40 Hz to 1 kHz

• Temperature measurement (thermocouple) Type: WA9□1C-0□

Range	Sensor	Resolution	Display	Accuracy*	Maximum allowable input
KA	K	0.1°C	–50 to +199.9°C	±0.5% of FS	±5V
KB			–50 to +1200.0°C	±0.2% of FS	
J	J		–50 to +1000.0°C		
T	T		–50 to +400.0°C	±0.6% of FS	
S	S		0 to +1700.0°C	±0.4% of FS	
R	R		–10 to +1700.0°C		
B	B		100 to +1800.0°C	±0.4% of FS	

*Accuracy measurement conditions: 23°C±5°C, 35 to 85% RH
* Measurement accuracy of range B: Applies to 500°C or more.

(Note) 1. Cold contact compensation error: ±2°C
2. Sensor internal resistance: 50Ω or less
3. Decimal point: Displayed at fixed position in each range
4. Burnout warning: "-----" is displayed

• AC current measurement (display of true RMS value) Type: WA9□15-0□

Range	Measurement range	Display	Input impedance	Maximum allowable input
23	19.999mA	Offset: ±19999 Full scale: ±19999	10Ω	50mA
24	199.99mA		0.1Ω	3A
25	1999.9mA			

(Note) 1. Accuracy: ± (0.2% of rdg (displayed value) + 20 digit) (measurement conditions: 23°C ±5°C, 35 to 85% RH) (applies to sine wave of 5% or more of full scale)
2. Response speed: Approx. 1 sec. (display of 10 to 90%)
3. Range of frequencies: 40 Hz to 1 kHz

• Process signal measurement Type: WA9□1B-0□

Range	Measurement range	Display	Input impedance	Maximum allowable input
2A	4 to 20mA	Offset: ±19999 Full scale: ±19999	10Ω	±50mA
1V	1 to 5V		1MΩ	±50V
3V	0 to ±10			

(Note) 1. Accuracy and range (2 A): ± (0.2% of rdg (displayed value) + 3 digits) (Measurement conditions: 23°C ±5°C, 35 to 85% RH)
(Note) 2. Accuracy and range (1 V, 3 V): ± (0.1% of rdg (displayed value) + 3 digits)
(Measurement conditions: 23°C ±5°C, 35 to 85% RH)

• Temperature measurement (resistance temperature sensor) Type: WA9□1D-□□

Range	Sensor	Resolution	Display	Accuracy*
PA	Pt–100Ω	0.1°C	–100.0 to +199.9°C	±0.2% of FS
JPA	JPt–100Ω			
PB	Pt–100Ω	1°C	–100 to +600°C	±0.6% of FS
JPB	JPt–100Ω		–100 to +500°C	

*Accuracy measurement conditions: 23°C±5°C, 35 to 85% RH

(Note) 1. Resistor current: Approx. 1 mA
2. External resistance: 10Ω or less per lead line
3. Decimal point: Displayed at fixed position in each range
4. Burnout warning: "OL" is displayed at disconnection of A or B. "-----" is displayed at disconnection of C

■ Specifications

Display	Red 7-segment LED, letter height approx. 14.2 mm
Display range	-19999 to 19999 (display of 4.5 digits)
Zero display / Dead zone	Reading-zero suppression / No dead zone for AC input products as well
Power source	- AC 100 to 240 V (allowable range: 90 to 264 V), - DC 5 to 12 V (allowable range: 4.5 to 13.2 V) - DC 12 to 24 V (allowable range: 10.8 to 26.4 V)
Power consumption	AC rated product: Approx. 4.5 VA (TYP), DC rated product: Approx. 1.7 W
Sampling speed	Max. 25 times/sec.
Over-range warning	"O.L." or "–O.L." is displayed for input signal of maximum display or more
Main functions	Scaling function (excluding for temperature measurement), linearization function, averaging process function, digital zero backup function, external control "hold, digital zero, peak hold, pattern select" function (short circuit between terminals)
Built-in EEPROM Allowable re-writing times	1 million times minimum (Other than when the parameter setting is changed, rewriting of EEPROM is performed also when digital zero is turned ON from OFF in a condition where digital zero backup is set to ON.)
Service temperature and humidity range	0 to 50°C, 35 to 85% RH (no dew condensation)
Storage temperature range	-10 to 70°C (however, no icing or no condensation)
Outline dimensions (mm)	96 (W) × 48 (H) × 75 (D)
Dielectric strength	- AC 1500 V for one min.: Between power source - signal input / external control input / BCD output terminal (AC power source product) - DC 500 V for one min.: Between power source - signal input / external control input / BCD output terminal (DC power source product) - DC 500 V for one min.: Between input signal - BCD output and external control terminal (common) - AC 1500 V for one min.: Between case - each terminal (common)
Insulation resistance	100 MΩ or more between each terminal described above (with DC 500 V mega)
Mass	Approx. 160 g (for AC power source product), approx. 150 g (for DC power source product)
Accessory	Instruction manual, unit seal and socket connector

■ External control

Hold	Hold ON at short circuit of HOLD terminal and COM terminal or by "0" level
Digital zero	Digital zero ON by short circuit of DZ terminal and COM terminal or by "0" level
Peak hold	Peak hold function ON at short circuit of PH terminal and COM terminal or by "0" level
Pattern select	Selection of scaling data pattern by combination of open/short circuit (or "1" level / "0" level) of P. SELO terminal and P. SEL 1 terminal
Control signal "0" level	0 to 1.5 V against COM
Control signal "1" level	3.5 to 5 V against COM

■ Option specifications

• BCD output

• TTL output

Measurement data	Tri-state parallel BCD
Polarity signal	“1” level when the display is showing negative value
Over signal	“1” level when the display is showing exceeded value
Printing command signal	Positive pulse output after completion of measurement
Output logic	Possible to switch (excluding printing command signal)
Output signal	TTL level Fine out 2 CMOS compatible

• Enable

Function	BCD output is in high impedance (TTL output) / transistor OFF (open collector output) by short circuit of ENABLE terminal and COM terminal or by “0" level.
Control signal “0” level	0 to 1.5 V against COM
Control signal “1” level	3.5 to 5 V against COM

• Open collector output (NPN type)

Measurement data	Transistor “ON” when the negative logic is “1”
Polarity signal	Transistor “ON” when the display is showing negative value
Over signal	Transistor “ON” when the display is showing exceeded value
Printing command signal	Transistor “ON” after completion of measurement
Output logic	Possible to switch (excluding printing command signal)
Transistor output	Voltage DC 30 V max. Current 10 mA max. 1.2 V or less when output saturation voltage is 10 mA

■ Dimensions, mm

Front view

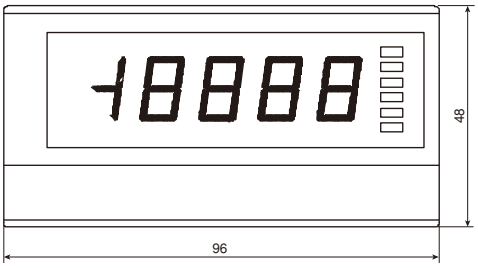

Right side view

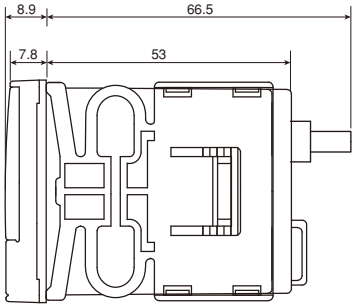

Top view

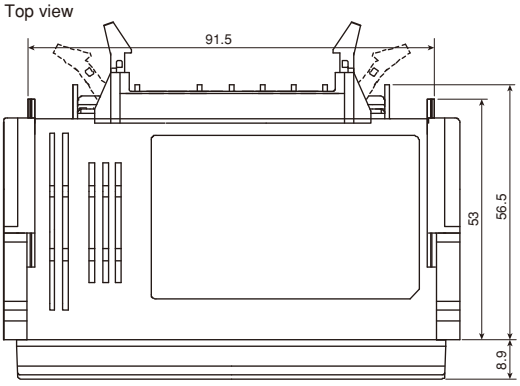

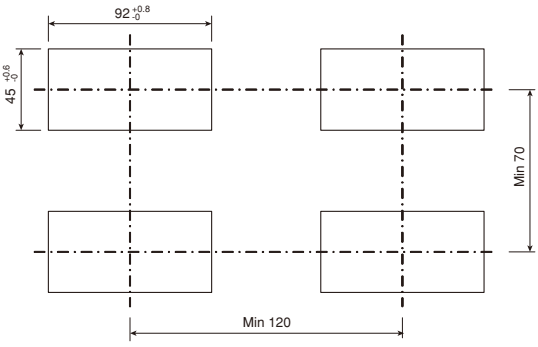

Panel cutting (panel plate thickness 0.8 to 5 mm)

Rear surface terminal explanation drawing

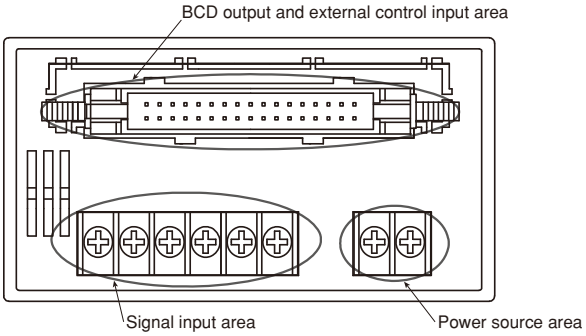

Explanation diagram of operation key in front panel
(condition where front panel is removed)

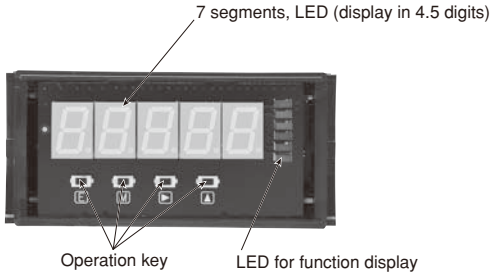

Digital Panel Meter
WA9000 series

■ Wiring diagram [Terminal: M3 screw]

• Power source

WA931□-0□
WA941□-0□

DC drive power source

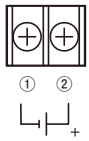

WA911□-0□

AC drive power source

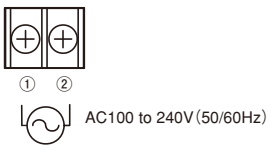

• Conforming crimp terminal

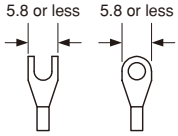

• Input

WA9□11-0□
WA9□14-0□

DC AC voltage measurement (lower terminal)

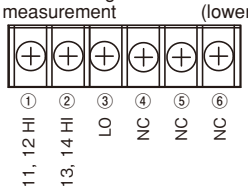

WA9□12-0□

DC current measurement (lower terminal)

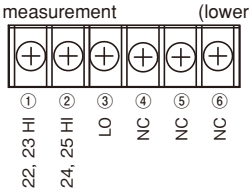

WA9□15-0□

AC current measurement (lower terminal)

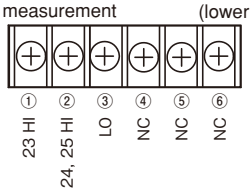

WA9□16-0□

AC large current measurement (lower terminal)

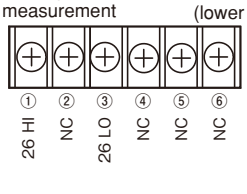

WA9□1B-0□

Process signal measurement (lower terminal)

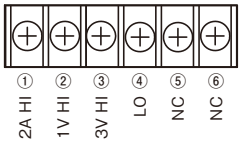

WA9□1C-0□

Temperature (thermocouple sensor) (lower terminal)

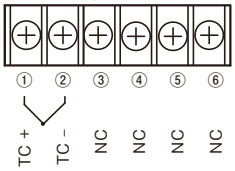

WA9□1D-0□

Temperature (resistance temperature sensor) (lower terminal)

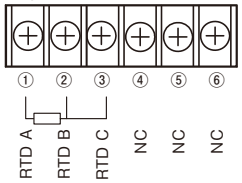

WA9□1E-0□
WA9□1F-0□

15 ranges of DC and AC high voltage (lower terminal)

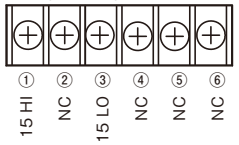

• Output

Upper side terminal (with no BCD output)
WA9□1□-01

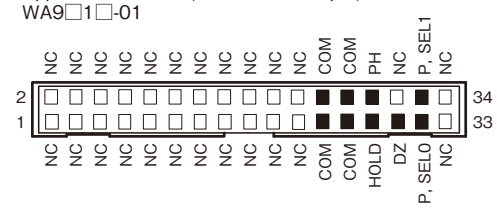

Upper side terminal (with BCD output)
WA9□1□-02, WA9□1□-03

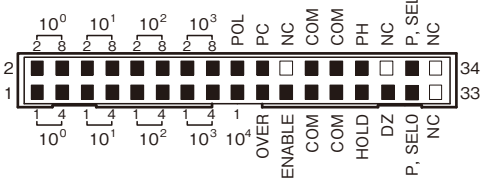

Upper side terminal connector:
HIF-3BA-34D-2.54DS
(Hirose Electric Co., Ltd.)

Supplied connector:
HIF-3BA-34D-2.54R
(Hirose Electric Co., Ltd.)

Conforming to CE marking

■ Features

- Possible to select with or without isolation between input and power source
- Improvement in visibility by high-luminance LED (3 1/2 display)

■ DC voltage measurement

Range	Measurement range	Accuracy	Input impedance	Maximum allowable input
11	±199.9mV	± (0.1% of FS)	100MΩ	±50 V
12	±1.999V			
13	±19.99V		Approx. 1 MΩ	±120 V
14	±199.9V			±250 V

■ DC current measurement (insulated power source type only)

Range	Measurement range	Accuracy	Input impedance	Maximum allowable input
22	±1.999mA	± (0.2% of FS)	100Ω	±50mA
23	±19.99mA		10Ω	±150mA
24	±199.9mA		1Ω	±500mA
25	±1.999A		0.1Ω	±3A

■ Power source specifications

- Non-insulation type
  Power source voltage: 5V DC±5%
  Power consumption: Approx. 60 mA
- Insulation type
  Power source voltage: 4.75 to 26.4 V DC
  Power consumption: Approx. 100 mA

■ General specifications

Display: 7-segment LED (letter height 10 mm)
Operation method: Double integral method
Input circuit: Single ended type
Sampling speed: Approx. 2.5 times/sec.
Polarity display: Automatically displays when the calculation result is negative.
Maximum display: 1999
Over range warning: Flashes displaying 000 or -000 for input signal exceeding the measurement range.
Decimal point: Possible to set by the socket on the display surface panel
External control: Hold (by input LO terminal and hold terminal short circuit)
Service temperature and humidity range: 0 to 50°C, 35 to 85% RH (no dew condensation)
Storage temperature and humidity range: -10 to 70°C 60% RH or less (no dew condensation)
Outline dimensions: 48 mm (W) × 24 mm (H) × 39.7 mm (D)
Mass: Approx. 40 g
Dielectric strength: Between power source terminal and input terminal
500 V AC for one min. (insulated type only)
1500 V AC between case and each terminal for one min.
Insulation resistance: Between power source and input terminal
500 V DC 100 MΩ or more (insulated type only)
Accessory: Instruction manual

■ Component of type

WA21□0-□□

Power source (two types)
: 1. Non insulated power source (for 5 V DC)
2. Insulated power source (for 5 to 24 V DC)

Input range
: 11. ±199.9mV (Not available on WA2110.)
12. ±1.999V
13. ±19.99V
14. ±199.9V
* 22. ±1.999mA
* 23. ±19.99mA
* 24. ±199.9mA
* 25. ±1.999A

* Power source:
Supports 2. Insulated power source only.

■ Dimensions, mm

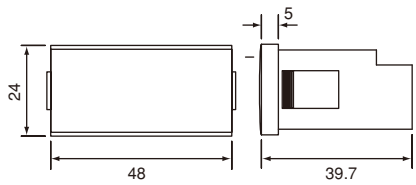

■ Panel cutting (panel plate thickness 0.8 to 3.5 mm)

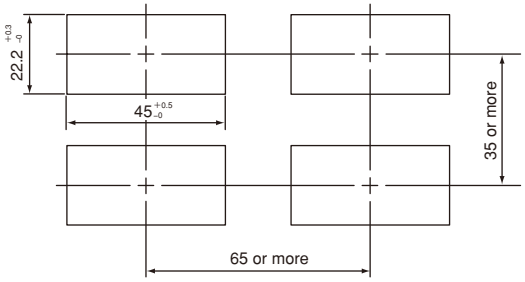

■ Wiring diagram (terminal structure: Press-tightening terminal)

(Connection line diameter size: AWG 23 to 16)

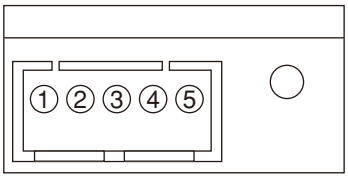

Terminal No.	Name	Explanation
1	HI	Input signal + side
2	LO	Input signal - side
3	HOLD	External control terminal
4	0V	Power source terminal - side
5	+V	Power source terminal + side

Power source insulation system: ⑤ terminal + 5 to 24 V, LO and 0 V are not connected internally.
Power source non-insulation system: ⑤ terminal + 5 V, LO and 0 V are connected internally.

Earth Leakage Protective Relays for Low Voltage Space Heater CH5 Series

Optimum solution for protecting switchboards and control panels from frigidity and humidity

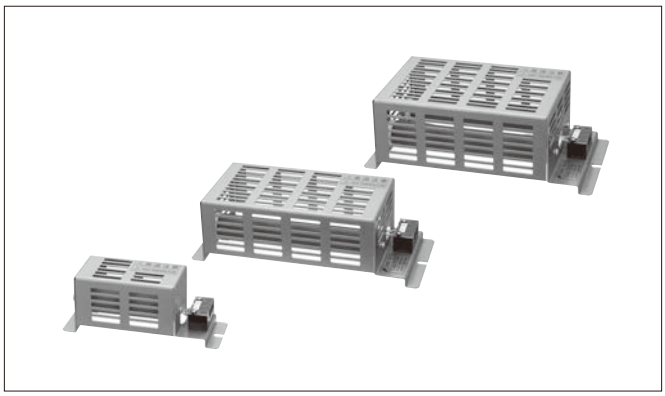

■ Features

- Even if the temperature of the heating element rises, the surface temperature of the protective cover can be kept low, which provides the product with a higher level of safety.
- The CH5 Series is compact and economical.
- Equipped with a screw terminal, the space heater can be connected with an ordinary IV wire.
- The heating element is a noncombustible wire-wound resistor that is distinguished for durability.
- All types are compliant with the RoHS Directive (lead-free).

■ Voltage, capacity, type

Rated voltage [V]	Rated power [W]	Type	Mass [kg]
100/110	20/24	**CH5-102A**	0.4
	50/60	**CH5-105A**	0.4
	100/120	**CH5-110A**	0.6
	200/240	**CH5-120A**	0.9
200/220	20/24	**CH5-202A**	0.4
	50/60	**CH5-205A**	0.4
	100/120	**CH5-210A**	0.6
	200/240	**CH5-220A**	0.9

■ Specifications

Rated insulation voltage	250V
Insulation resistance	50 MΩ or over (500 V megger), between terminals and ground
Dielectric strength	2,000 V AC for 1 minute
Allowable ambient temperature	-20 to +50°C
Surface treatment of cover	Hot dip zinc-aluminum-magnesium alloy plating

■ Type number nomenclature

CH5 – 2 20 A

Basic type — CH5

Rated voltage — 2

1	100/110V
2	200/220V

Rated power — 20

02	20/24W
05	50/60W
10	100/120W
20	200/240W

Index symbol — A

■ Dimensions, mm

- CH5-102A, CH5-105A, CH5-202A, CH5-205A

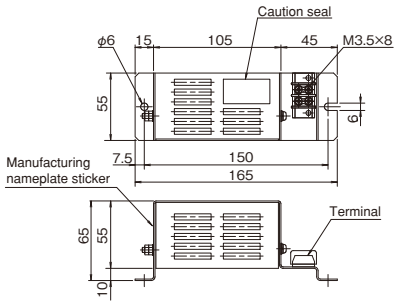

- CH5-110A, CH5-210A

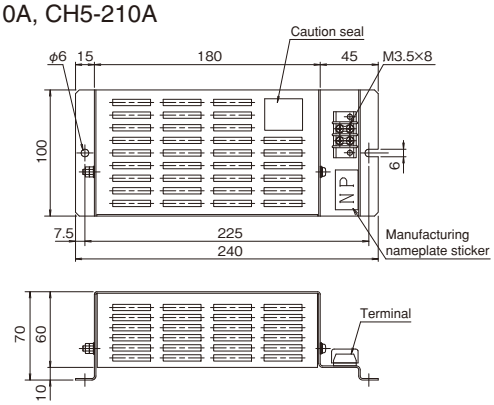

- CH5-120A, CH5-220A

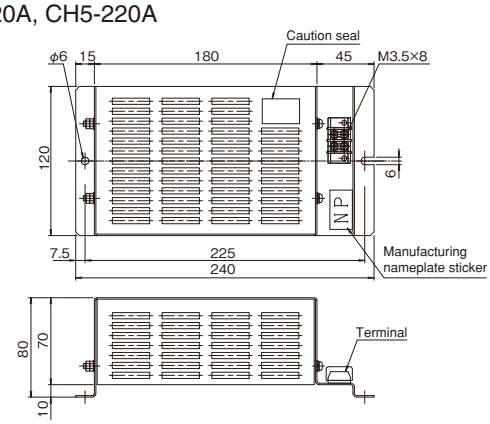

■ **Precautions about use**

- Observe the specified operating voltage.
- On a vertical plate, mount the space heater with its length-wise axis in the lateral direction (so that the terminal faces sideways). Mount the CH5-120A and the CH5-220A (200 W products) horizontally. These types cannot be used on a vertical plate.
- Do not mount or use the space heater in such a manner that heat radiation will be blocked.
- Protect the cable from heat, and connect it downward.
- Terminal screw tightening torque: 0.8 to 0.9 N·m

[Bases for selecting a space heater]

When a space heater is used as a simple measure against dew condensation, relative humidity can be reduced by keeping the inside temperature of the switchboard higher than the air temperature (⊿ T).

(When ⊿ T: 5K, relative humidity will decrease about 20%.)

(When ⊿ T: 10K, relative humidity will decrease about 40%.)

◆ Example of selecting heater capacity (calculation example) *1

1. Outline dimensions of switchboard:

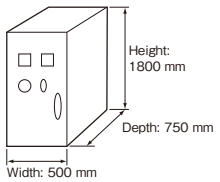

2. Heat radiation surface area of switchboard (area excluding bottom area)

   S=((500×1800)×2)+((500×750)×1)+((750×1800)×2)

   S=4.875(m^2)

3. The heater capacity (P) can be calculated from the heat radiation surface area (S) of the switchboard by referring to the graph on the assumption that the set temperature rise ⊿ T is 5K.

- ⊿ T = 5K, S = 4.875 (m2) -> -> P = 121.9 W

If there is any source of heat generation (transformer, etc.) (example: 50 W) inside the switchboard, subtract the heat generation capacity inside the switchboard from the above-mentioned heater capacity.

P=121.9-50=71.9[W]

Thus, the heater capacity that should be selected is one close to the calculated value:

Example: 50 to 100 [W] heater

Note:* Use this value for reference because it significantly varies depending on the ventilated condition of the switchboard.

■ **Surface temperature of cover (when measured at room temperature of 7°C)**

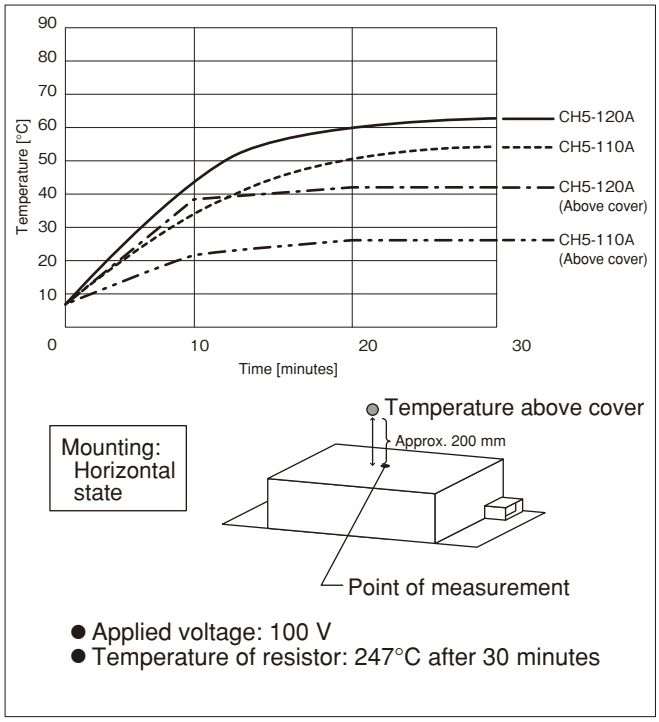

■ **Selecting space heater capacity for switchboard (reference value)**

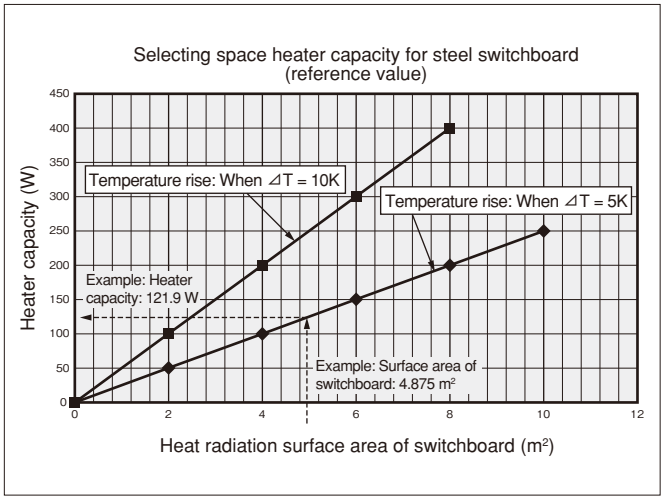

D1

Leakage Protective Relays for Low Voltage
General Earth Leakage Protective Relays QL-11B and QL-11F

The earth leakage protective relay is highly immune to noise, resistant to harmonics, lightweight, and thin.

(Flush mounting type) (Front mounting type)

■ Features

- The earth leakage protective relay is characterized by high noise immunity and less susceptible to radio waves, surges, etc.
- The earth leakage protective relay is capable of supporting inverter loads with high reliability.
- The flush mounting type is only 32 mm in mounting depth and optimum for thin switchboards.
- The front mounting type also features a low profile of 41 mm.
- The earth leakage protective relay is compliant with the RoHS Directive.

■ Type number nomenclature

QL−11 □ □

Basic type

Mounting

B	Flush mounting type
F	Front mounting type

Control power voltage

No code	AC
D	DC

■ Block diagram

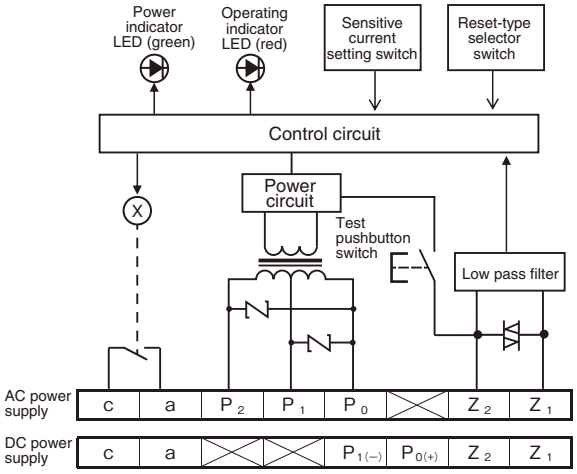

(Note) When the control power voltage is 100 V DC, P0 (+) and P1 (-).

■ Specifications

Type			QL-11□	QL-11□D
Compatible standard			JIS C 8374	
Rating	Control power voltage		100/200 V AC switching (by connecting terminal)	100V DC
	Frequency		50/60Hz	
	Sensitive current setting value		100-200-400-800-1,000 mA *	
	Non-pick-up current		50-100-200-400-500mA	
	Operating time setting value		0.3s	
	Inertia non-operating time		Over 0.1 seconds	
Performance	Operating voltage range		80 to 121V AC 160 to 242V AC	80 to 143V DC
	Allowable sensitive current range		51 to 100% to the setting value	
	Operating time		Equal to or lower than the setting value	
	Operating temperature range		-20 to +60°C	
	Power consumption	Constant	1.0 VA or less	1.3 W or less
		During operation	1.2 VA or less	2.0 W or less
	Insulation resistance		10 MΩ or over on 500 V megger	
	Dielectric strength		Between conductive part of control circuit and enclosure: 2,000 V AC for 1 minute Between conductive parts of control circuit: 1,500 V AC for 1 minute Between open polarity contacts of same control circuit: 1,000 V AC for 1 minute	
Function, etc.	Test method		By means of test pushbutton switch	
	Operating indicator		LED (red)	
	Power indicator		LED (green)	
	Output contact	Configuration	1a	
		Switching capacity	250V AC 3A (cosϕ=1)	
			30V DC 3A (R/L=1ms) 110V DC 0.4A (R/L=1ms)	
		Reset type	Automatic/Manual (selection by means of switch)	
	Mounting method		Flush mounting type/Front mounting type	
	Mass		Flush mounting type: 240 g, front mounting type: 260 g	
	Combined zero-phase current transformer		Can be combined with any of the zero-phase current transformers listed in this catalog.	
	Case material		ABS resin	

Note:* The setting values of 400 mA and 800 mA are out of the rated sensitive current values specified in JIS C 8374.

Leakage Protective Relays for Low Voltage
General Earth Leakage Protective Relays QL-11B, QL-11F

■ Explanation of operation

The zero-phase current transformer (ZCT) detects a leak current and inputs it to the earth leakage protective relay. The input signal is separated from the harmonics component by the low pass filter, amplified, rectified, and then input to the control circuit. If the leak current exceeds the current setting value, the operating indicator LED will come on within 0.3 seconds, and relay output (Ry) will be given. The relay output will be automatically reset when the leak current ceases to exist by automatic reset setting. It will not be reset by manual reset setting even if the leak current ceases to exist. The relay output and the operating indicator will be reset simply by flipping the reset-type selector switch to "Automatic."

■ Frequency characteristic

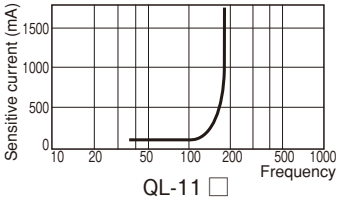

QL-11 □

■ External wiring diagram

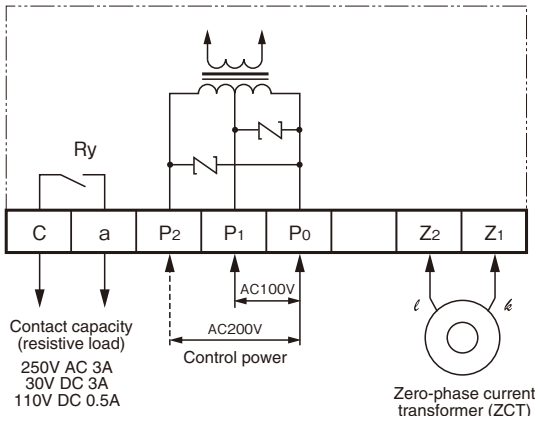

(Shown above is the terminal arrangement of the flush mounting type. The terminals of the front mounting type are c, a, P2, P1, P0, BL (blank), Z2, and Z1 from the right.)
(Note) When the control power voltage is 100 V DC, P0 (+) and P1 (-).

■ Dimension, mm

QL-11B □

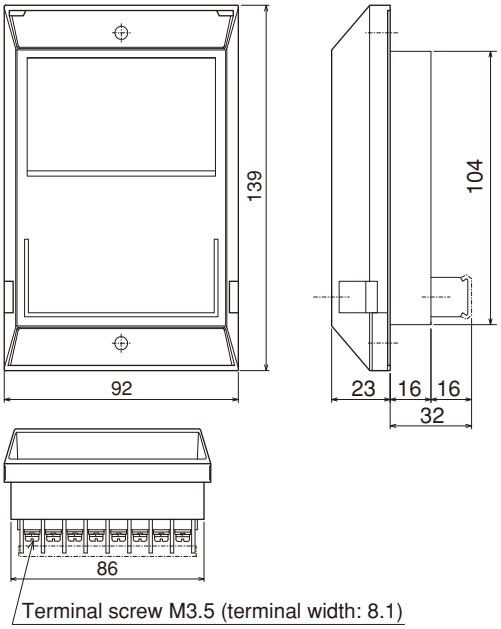

QL-11F □

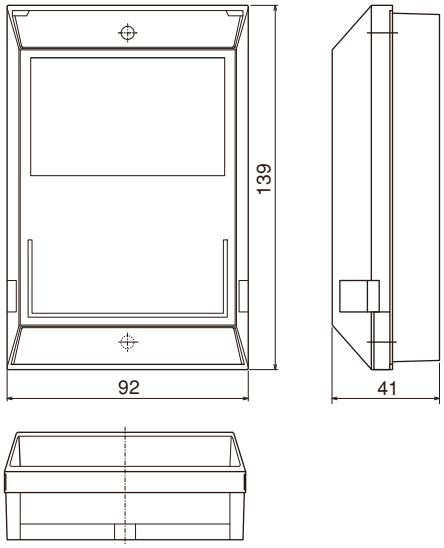

Note) The specifications of the terminal are the same as those of the terminal of the QL-11B.

Panel cutout size

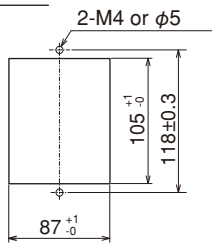

Mounting dimension

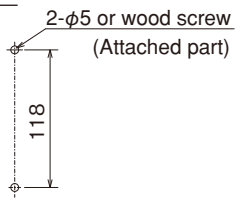

Leakage Protective Relays for Low Voltage
Square-type Earth Leakage Protective Relays QL-30B, QL-31BN, and QL-31BA

The 72 x 72 mm square earth leakage protective relay is a flush-mounting-type that fits well with components on a panel.

QL-30B (equipped with a magnetic inversion display)

QL-31B□ (equipped with an LCD display)

■ Features

- The size of the earth leakage protective relay is as small as 72 x 72 mm.
- The earth leakage protective relay is characterized by high noise immunity and less susceptible to radio waves, surges, etc.
- The earth leakage protective relay is capable of supporting inverter loads with high reliability.
- The earth leakage protective relay comes with a magnetic inversion display or LCD display.
- The earth leakage protective relay equipped with an LCD display has functions to measure leak currents, store maximum values, and display operation history (with six time stamps). (Provided with power failure backup)
- The QL-31BA earth leakage protective relay is equipped with an analog output function.
- The earth leakage protective relay is compliant with the RoHS Directive.

■ Type number nomenclature

(equipped with a magnetic inversion display)

QL−30 B

Basic type — Mounting

B	Flush mounting type

(equipped with an LCD display)

QL−31 B □

Basic type — Mounting — Analog output

B	Flush mounting type

N	Not provided
A	Provided

■ Specifications

Type			QL-30B
Compatible standard			JIS C 8374
Rating	Control power voltage		100/200 V AC switching (by switching terminal connection)
	Frequency		50/60Hz
	Sensitive current setting value		100/200/500/800/1,000 mA (Note)
	Non-pick-up current		50/100/250/400/500mA
	Operating time setting value		0.1/0.3 seconds (switching by means of switch)
	Inertia non-operating time		– / Over 0.1 seconds
Performance	Operating voltage range		80 to 121V AC 160 to 242V AC
	Allowable sensitive current range		51 to 100% to the setting value
	Operating time		Equal to or lower than the setting value
	Operating temperature range		–20 to +60°C
	Power consumption	Constant	1.0 VA or less
		During operation	1.5 VA or less
	Insulation resistance		10 MΩ or over on 500 V megger
	Dielectric strength		Between conductive part of control circuit and enclosure: 2,000 V AC for 1 minute Between conductive parts of control circuit: 1,500 V AC for 1 minute Between open polarity contacts of same control circuit: 1,000 V AC for 1 minute
Function, etc.	Test method		By means of test pushbutton switch
	Operating indicator		Magnetic inversion display (orange)
	Output contact	Configuration	1a
		Switching capacity	250V AC 2A (cos ϕ =1) 30V DC 2A (R/L=1ms) 110V DC 0.4A (R/L=1ms)
		Reset type	Automatic/Manual (selection by means of switch)
	Mounting method		Flush mounting type
	Mass		Flush mounting type: 410 g
	Combined zero-phase current transformer		Can be combined with any of the zero-phase current transformers listed in this catalog.
	Case material		Acrylic resin (cover), ABS resin (case)

Note:* The setting value of 800 mA is out of the rated sensitive current values specified in JIS C 8374.

Type (tentative)			QL-31BN	QL-31BA
Compatible standard			JIS C 8374	
Rating	Control power voltage		100/200 V AC switching (by connecting terminal)	
	Frequency		50/60Hz	
	Sensitive current setting value		50 to 1,300 mA (in steps of 10 mA) *	
	Non-pick-up current		50% to sensitive current setting value	
	Operating time setting value		0.1/0.3 to 1.5 seconds (in steps of 0.1 seconds)	
	Inertia non-operating time		- / [operating time setting value - 0.3] second; minimum time: over 0.1 seconds	
Performance	Operating voltage range		80 to 121V AC 160 to 242V AC	
	Allowable sensitive current range		51 to 100% to the setting value	
	Operating time		Equal to or lower than the setting value	
	Operating temperature range		–20 to +60°C	
	Power consumption	Constant	1.8 VA or less	
		During operation	2.0 VA or less	
	Insulation resistance		10 MΩ or over on 500 V megger	
	Dielectric strength		Between conductive part of control circuit and enclosure: 2,000 V AC for 1 minute Between conductive parts of control circuit: 1,500 V AC for 1 minute Between open polarity contacts of same control circuit: 1,000 V AC for 1 minute	
Function, etc.	Test method		By means of operation test switch	
	Operating indicator		LCD display (black circle)	
	Output contact	Configuration	1a+1c	1c
		Switching capacity	250V AC 3A (cosφ=1) 30V DC 3A (R/L=1ms) 110V DC 0.5A (R/L=1ms), 0.2A (R/L=15ms)	
		Reset type	Automatic/Manual (selection by means of switch)	
	Analog output		Not provided	4 to 20mA DC (Allowable load: 300 Ω or over)
	Storage of maximum values		Automatically updated to maximum values	
	Operation history		Up to six operations will be stored with a time stamp. Power failure backup: Approx. 1 month	
	Mounting method		Flush mounting type	
	Mass		Flush mounting type: 540 g	
	Combined zero-phase current transformer		Can be combined with any of the zero-phase current transformers listed in this catalog.	
	Case material		ABS resin	

Note:* Rated sensitive current values, including those out of the range specified in JIS C 8374, can be set delicately.

■ Block diagram

QL-30B

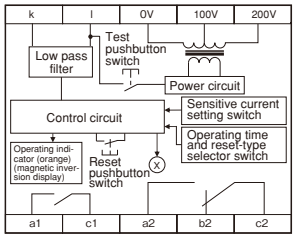

QL-31BN

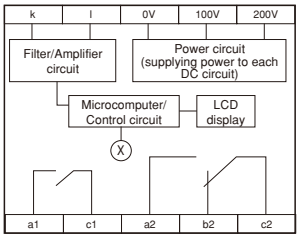

QL-31BA

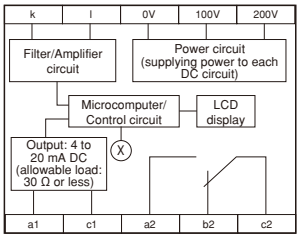

■ Explanation of operation

QL-30B

The zero-phase current transformer (ZCT) detects a leak current and inputs it to the earth leakage protective relay. If the leak current exceeds the current setting value, the earth leakage protective relay will indicate the operation status and give RY output (relay) within the set operating time. The relay output will be automatically reset when the leak current ceases to exist by automatic reset setting. It will not be reset by manual reset setting even if the leak current ceases to exist. The relay output (RY) and the operating indicator will be reset simply by pressing the Reset pushbutton switch.

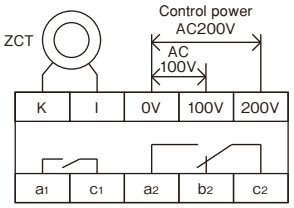

Contact capacity: 250 V AC/1 A (power factor: 04)

QL-31BN, QL-31BA

The basics of operation are as described on the left.
Using MENU (2), select a function.
Pick-up current, operating time, reset type, analog output upper and lower limits, current time, current date, operation history
Using UP (3), select Setting value or Setting.
In measured value mode, select Measurement or Maximum value.
When Setting value or Setting is selected with UP (3), reduce the value using DOWN (4).
Using TEST (5), perform test operation.
To reset the relay, select Automatic or Manual using MENU (2) in advance.
Operation history: Select this item using MENU (2), and check operation history.
The operation history and time will be backed up by power failure compensation for about a month.
Using UP (3), check the records one by one.
Maximum value record: After selecting any operation history, select this item using UP (3).
This is not backed up by power failure compensation.
To clear a maximum value and reset the alarm contact of the manual reset type, display the maximum value using UP (3), and press DOWN (4). The relay output (Ry) and the operating indicator will be reset. (See the operation manual.)

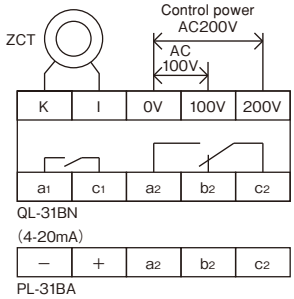

■ Frequency characteristic

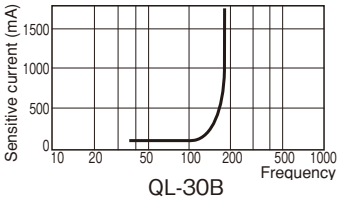

QL-30B

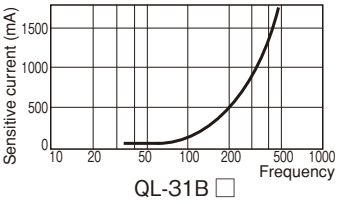

QL-31B □

■ Dimension, mm

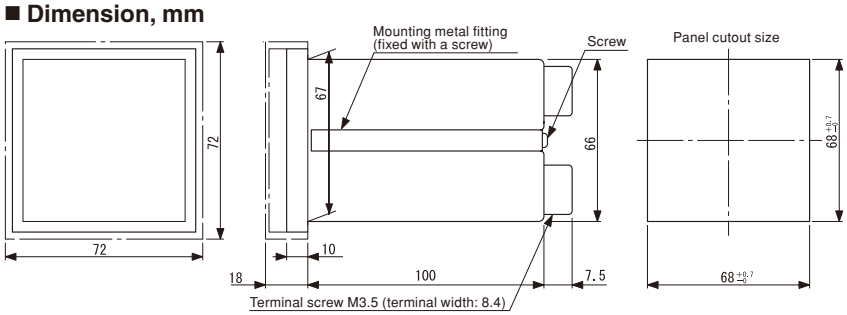

Earth Leakage Protective Relays for Low Voltage
Plug-in Type Earth Leakage Protective Relay QL-30P

Socket-mounting-type earth leakage protective relay that is easy to attach and detach.

■ Features

- The earth leakage protective relay is characterized by high noise immunity and less susceptible to radio waves, surges, etc.
- The earth leakage protective relay is capable of supporting inverter loads with high reliability.
- The earth leakage protective relay is available in a wide range of control power voltages from 80 to 264 V AC.
- The earth leakage protective relay is compliant with the RoHS Directive.

■ Type number nomenclature

QL−30 P

Basic type

Mounting

P	Plug-in type

■ Specifications

Type			QL-30P
Compatible standard			JIS C 8374
Rating	Control power voltage		Both 100 V AC and 200 V AC used
	Frequency		50/60Hz
	Sensitive current setting value		100-200-500-800-1,000 mA (Note)
	Non-pick-up current		50–100–250–400–500mA
	Operating time setting value		0.1/0.3 seconds (switching by means of switch)
	Inertia non-operating time		- / Over 0.1 seconds
Performance	Operating voltage range		AC80 to 264V
	Allowable sensitive current range		51 to 100% to the setting value
	Operating time		Equal to or lower than the setting value
	Operating temperature range		–20 to +60°C
	Power consumption	Constant	1.0 VA or less
		During operation	3.0 VA or less
	Insulation resistance		10 MΩ or over on 500 V megger
	Dielectric strength		Between conductive part of control circuit and enclosure: 2,000 V AC for 1 minute Between conductive parts of control circuit: 1,500 V AC for 1 minute Between open polarity contacts of same control circuit: 1,000 V AC for 1 minute
Function, etc.	Test method		By means of test switch
	Operating indicator		LED (red)
	Output contact	Configuration	2c
		Switching capacity	250V AC 2A (cos ϕ=0.4) 30V DC 2A (R/L=1ms) 110V DC 0.4A (R/L=1ms)
		Reset type	Automatic/Manual (selection by means of switch)
	Mounting method		Front mounting type/Socket plug-in type
	Mass		Flush mounting type: 110 g
	Combined zero-phase current transformer		Can be combined with any of the zero-phase current transformers listed in this catalog.
	Case material		PC/ABS resin (case)

Note:* The setting value of 800 mA is out of the rated sensitive current values specified in JIS C 8374.

■ Block diagram

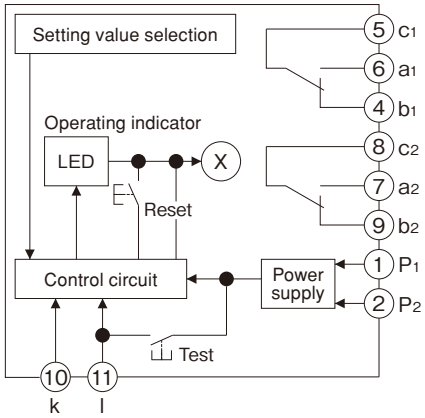

■ Name of each part

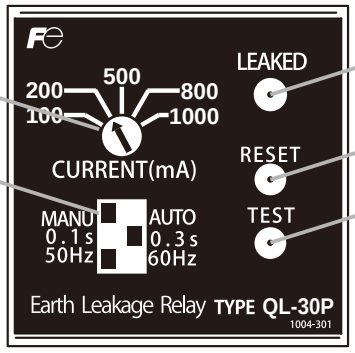

Setting item	⬅	➡
Reset type	Manual	Automatic
Operating time	0.1s	0.3s
Operational frequency	50Hz	60Hz

Fuji Electric FA Components & Systems Co., Ltd.
Information subject to change without notice

■ Explanation of operation

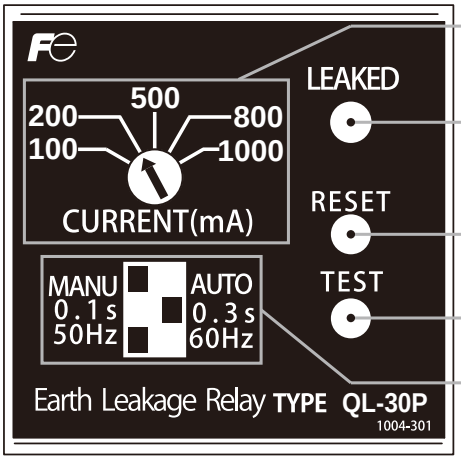

■ Pick-up current value setting
Select from 100, 200, 500, 800, and 1,000 mA.

■ Operating indicator
The LED lamp will come on in case of earth leakage.

■ Reset button
Reset button to be used when manual reset is selected.

■ Test button
Button for leakage tests.

■ Selector switch
From top: "Manual/Automatic reset selection," "Operating time selection," "Rated frequency selection"

■ Frequency characteristic

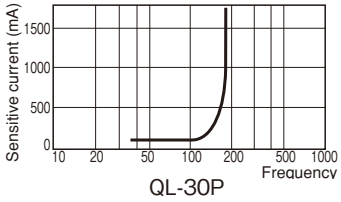

The zero-phase current transformer (ZCT) detects a leak current and inputs it to the earth leakage protective relay. If the leak current exceeds the current setting value, the earth leakage protective relay will indicate the operation status and give RY output (relay) within the set operating time.
The relay output will be automatically reset when the leak current ceases to exist by automatic reset setting. It will not be reset by manual reset setting even if the leak current ceases to exist. The relay output (RY) and the operating indicator will be reset simply by pressing the Reset pushbutton switch.

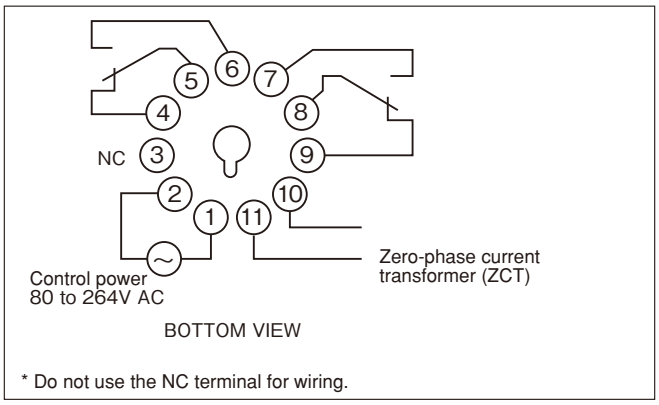

■ Dimension, mm

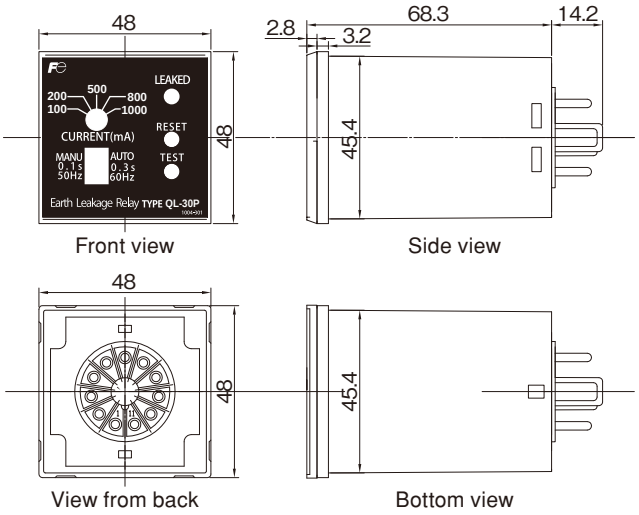

Applicable socket

TP411X

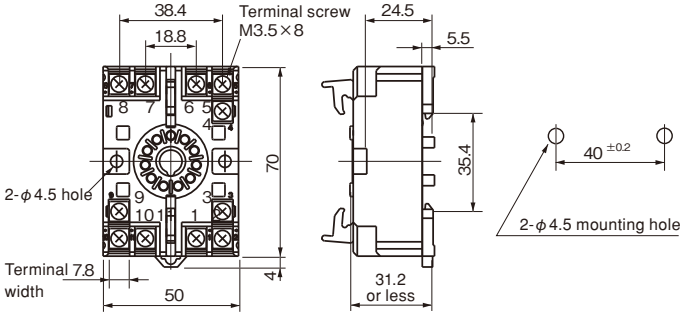

Mass: Approx. 70 g

* The earth leakage protective relay can be mounted on a DIN rail (IEC 35-mm wide) or panel.
* The socket is an optional item.

D1

Earth Leakage Protective Relays for Low Voltage
Two-stage Alarm Type Earth Leakage Protective Relays QL-21B and QL-21F

The earth leakage protective relay achieves optimum earth leakage monitoring through two-stage monitoring.

■ Features

- The earth leakage protective relay can be used to give a warning when a minor earth leakage is detected, and stop the power supply when a serious earth leakage is detected.
- Optimum earth leakage monitoring is achieved, making it possible to ensure both preventive maintenance and stable power supply through two-stage monitoring.
- Thus, this earth leakage protective relay can be applied with peace of mind to important equipment that requires a stable power supply.
- The earth leakage protective relay is characterized by high noise immunity and less susceptible to radio waves, surges, etc.
- The earth leakage protective relay is capable of supporting inverter loads with high reliability.
- The flush mounting type is only 32 mm in mounting depth and optimum for thin switchboards. The front mounting type also features a low profile of 41 mm.
- The earth leakage protective relay is compliant with the RoHS Directive.

■ Type number nomenclature

QL−21 □ □

Basic type

Mounting

B	Flush mounting type
F	Front mounting type

Control power voltage

1	100 V AC
2	200 V AC
D	100 V DC

■ Specifications

Type (tentative)			QL-21□	QL-21□D
Compatible standard			JIS C 8374	
Rating	Control power voltage		100 or 200 V AC (compatible with each voltage)	100V DC
	Frequency		50/60Hz	
	Sensitive current setting value	Minor earth leakage	0.3-0.5-1.0-1.5-2.0 A (Note)	
		Serious earth leakage	2-5-10-20-30A	
	Non-pick-up current	Minor earth leakage	0.15-0.25-0.5-0.75-1.0A	
		Serious earth leakage	1-2.5-5-10-15A	
	Operating time setting value	Minor earth leakage	0.3s	
		Serious earth leakage	0.3-0.5-1.0-2.0-3.0s	
	Inertia non-operating time	Minor earth leakage	Over 0.1 seconds	
		Serious earth leakage	Over 0.1-0.3-0.6-1.2-2.0 seconds	
Performance	Operating voltage range		80 to 121 V AC or 160 to 242 V AC	80 to 143V DC
	Allowable sensitive current range		51 to 100% to the setting value	
	Operating time	Minor earth leakage	Equal to or lower than the setting value	
		Serious earth leakage	Equal to or lower than the setting value	
	Operating temperature range		–20 to +60°C	
	Power consumption	Constant	1.5 VA or less	2.0 W or less
		During operation	2.0 VA or less	3.0 W or less
	Insulation resistance		10 MΩ or over on 500 V megger	
	Dielectric strength		Between conductive part of control circuit and enclosure: 2,000 V AC for 1 minute Between conductive parts of control circuit: 1,500 V AC for 1 minute Between open polarity contacts of same control circuit: 1,000 V AC for 1 minute	
Function, etc.	Test method		Test/Reset switch (for both functions)	
	Operating indicator	Minor earth leakage	LED (red)	
		Serious earth leakage	Magnetic inversion display (orange)	
	Power indicator	Minor earth leakage	LED (green)	
		Serious earth leakage		
	Output contact — Configuration	Minor earth leakage	1a	
		Serious earth leakage	1a	
	Switching capacity		250V AC 3A (cosφ=1) 30V DC 3A (R/L=1ms) 110V DC 0.4A (R/L=1ms)	
	Reset type	Minor earth leakage	Automatic reset	
		Serious earth leakage	Automatic/Manual (selection by means of switch)	
	Mounting method		Flush mounting type/Front mounting type	
Function, etc.	Mass		Flush mounting type: 260 g, front mounting type: 280 g	
	Combined zero-phase current transformer		Can be combined with any of the zero-phase current transformers listed in this catalog.	
	Case material		ABS resin	

Note:* The setting values of 0.3, 1.5, 2.0, and 30 A are out of the rated sensitive current values specified in JIS C 8374.

(Flush mounting type) (Front mounting type)

■ Block diagram

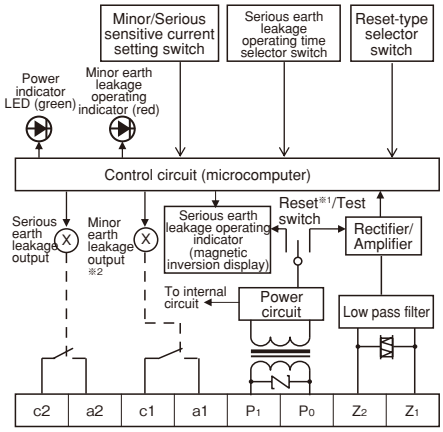

*1 Both the operating indicator and the output will be reset.
*2 The minor earth leakage output will be reset as the serious earth leakage output is activated.
Note: When the control power voltage is 100 V DC, P0 (+) and P1 (-).

Earth Leakage Protective Relays for Low Voltage
Two-stage Alarm Type Earth Leakage Protective Relays QL-21B and QL-21F

■ Explanation of operation

The zero-phase current transformer (ZCT) detects a leak current and inputs it to the earth leakage protective relay. The input signal is separated from the harmonics component by the low pass filter, amplified, rectified, and then input to the control circuit. If the input to the control circuit exceeds the minor earth leakage setting value for 0.3 seconds or longer, the operating indicator LED will come on, and a minor earth leakage protective relay output (Ry1) will be given. If the earth leakage accidents becomes more serious and the leak current exceeds the serious earth leakage setting value for the set operating time or longer, the magnetic inversion display will change from black to orange, and a serious earth leakage protective relay output (Ry2) will be given. At the same time, the minor earth leakage output will be reset.
The minor earth leakage output will be automatically reset when the leak current ceases to exist. The serious earth leakage output will be reset when automatic reset is set at the time the leak current ceases to exist, but it will not be reset by manual reset setting even if the leak current ceases to exist. The magnetic inversion display will continue displaying whichever reset type is selected. In addition, the relay output (Ry2) and the operating indicator will be reset by flipping down the Test/Reset switch.
(Flip down the Test/Reset momentary switch.)

■ External wiring diagram

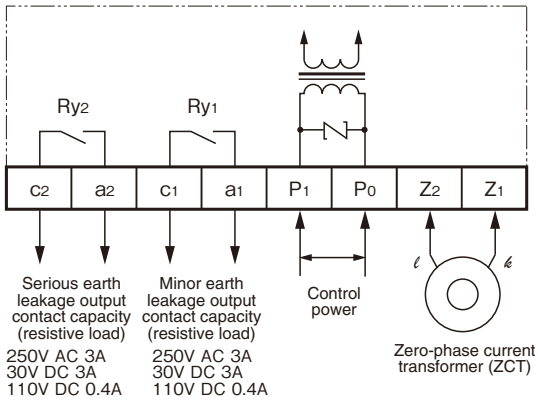

(Shown above is the terminal arrangement of the flush mounting type. The terminals of the front mounting type are c2, a2, c1, a1, P1, P0, Z2, and Z1 from the right.)
Note: When the control power voltage is 100 V DC, P0 (+) and P1 (-).

■ Frequency characteristic

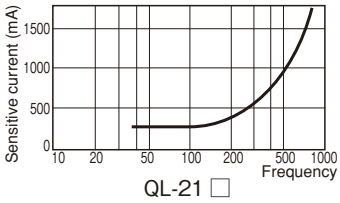

■ Dimension, mm

QL-21B □

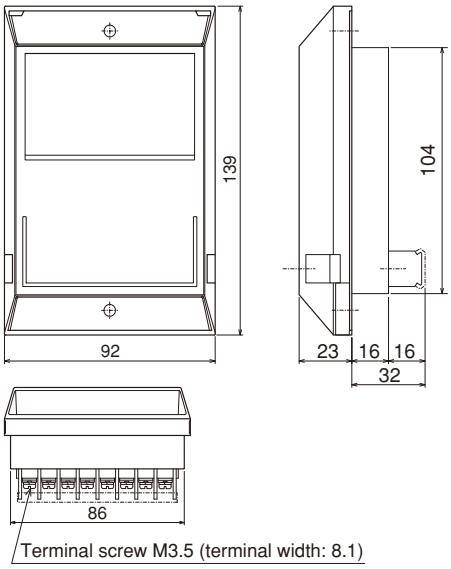

QL-21F □

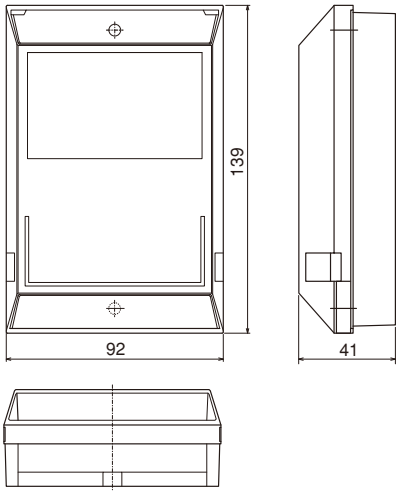

Note) The specifications of the terminal are the same as those of the terminal of the QL-21B.

Panel cutout size

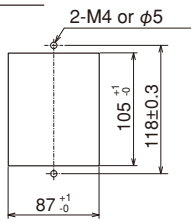

Mounting dimension

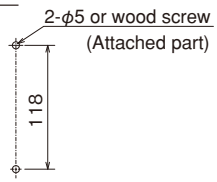

Earth Leakage Protective Relays for Low Voltage
Ior-type Earth Leakage Protective Relays QL-51F

Ior (I-zero-r) system earth leakage protective relay

■ Features

- The Ior-type earth leakage protective relay detects a leak current equivalent to insulation resistance. Since a leak current equivalent to the ground static capacity can be cut off, the earth leakage protective relay can monitor the insulated status of circuits with a high level of sensitivity.
- It is also easy to install because a zero-phase current transformer is applicable as it is in place of a conventional I0 system earth leakage protective relay.
- An easy-to-see, large-size four-digit LCD displays measured I0r values, measured Io values, maximum Ior values, and maximum Io values.
- The Ior-type earth leakage protective relay detects the phase configurations of applied circuits and automatically selects an optimum detection system. (Three-phase three-wire, single-phase three-wire)
- The Ior value will be output in 4 to 20 mA DC. The upper and lower limits of Ior can be set in steps of 50 mA.
- The earth leakage protective relay is compliant with the RoHS Directive.

■ Type number nomenclature

QL−51 F

Basic type — QL−51

Mounting — F: Front mounting type

■ Specifications

Type			QL-51F
Rating	Control power voltage		200V AC
	Frequency		50/60Hz
	Sensitive current setting value		50 to 500 mA (in steps of 50 mA)
	Operating time setting value		1 to 30 seconds (in steps of 1 second)
Performance	Operating voltage range		180 to 220V AC
	Allowable sensitive current range		Within Ior setting value ±10% or ±20 mA, whichever is larger
	Current measurement range		0 to 1,000 mA (Io current value)
	Measurement performance		Io measurement: ±(Io x 5%)±10 mA Ior measurement: ±(Io x 1%)±(Ior x 5%)±1 dgt
	Operating time		±0.2 seconds of setting value
	Operating temperature range		–20 to +50°C
	Power consumption	Constant	2.5 VA or less
		During operation	3.0 VA or less
	Insulation resistance		10 MΩ or over on 500 V megger
	Dielectric strength		Between conductive part of control circuit and enclosure: 1,500 V AC for 1 minute Between conductive parts of control circuit: 1,500 V AC for 1 minute
Function, etc.	Measurement function		Ior measured value/Io measured value, Ior maximum value/I0 maximum value
	Test method		Test switch
	Operating indicator		LED (red)
	Power indicator		LED (green)
	Output contact	Configuration	1a
		Switching capacity	250V AC 2A (cos φ=0.4) 30V DC 3 (R/L=1ms) 110V DC 0.5A (R/L=1ms), 0.2A (R/L=15ms)
		Reset type	Automatic reset
	Mounting method		Flush mounting type/Front mounting type
	Mass		Flush mounting type: 1 kg, front mounting type: 1 kg
	Combined zero-phase current transformer		Can be combined with any of the zero-phase current transformers listed in this catalog.*
	Case material		Steel

Note:* The zero-phase current transformer and the earth leakage protective relay were adjusted in combination to perform measurement with high accuracy. Connect the transformer and the relay of the same serial number.

■ Block diagram (control power voltage: AC)

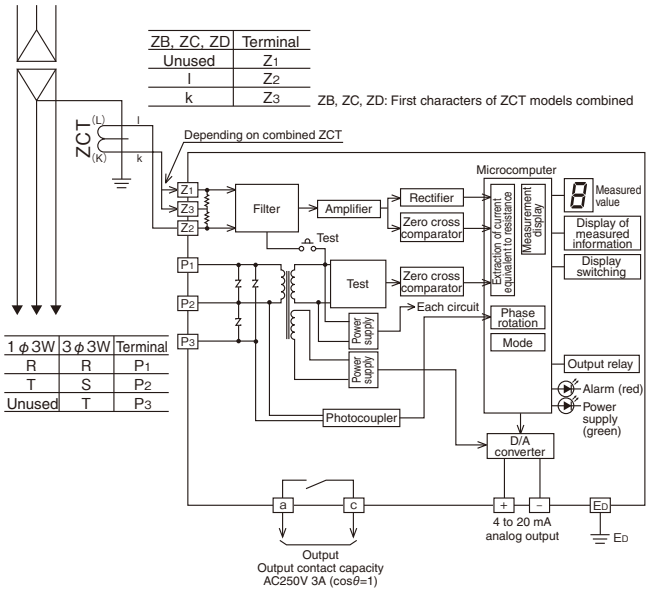

■ Explanation of operation

The zero-phase current transformer (ZCT) detects a leak current I0 and inputs it to the earth leakage protective relay. The fundamental wave component will be extracted from the I0 input and the power voltage input by the filter circuit, and the ground-fault current (I0r) equivalent to the resistance will be derived from the mutual phase angle. If I0r exceeds the specified value, the earth leakage protective relay will start to operate.
Make sure that the power LED (green) is lit.
If the power LED is flickering, the phase sequence of the three-phase power supply is shifted.

• Explanation of individual functions

(1) The functions will be switched in sequence each time the SW1 setting menu button is pressed.
The measured I0r and I0 values will be displayed. In general, operate the earth leakage protective relay in this mode.
(2) Set the I0r sensitive current using the SW2 (UP) or SW3 (DOWN).
(3) Set the operating time using the SW2 (UP) or SW3 (DOWN).
(4) Set the lower limit of analog output using the SW2 (UP) or SW3 (DOWN).
(5) Set the upper limit of analog output using the SW2 (UP) or SW3 (DOWN).
(6) Set ground resistance value compensation using the SW2 (UP) or SW3 (DOWN).
(7) Return to measured values. In these steps, the selectable items will change as follows each time the SW2 is operated: I0r → I0 → Maximum I0r value → Maximum I0 value → Return (Displayed information will be switched.)
The SW3 clears the displayed maximum value.

The settings made above need to be written into nonvolatile memory.
On any screen, hold down the SW4 “Run” for about 2 seconds. Release the SW4 when “ ● ” appears at the lower right corner of the screen.
The number “5” displayed in the lower central area of the screen indicates 50 Hz, and the number “6” represents 60 Hz. (The frequency does not need to be set because it will be automatically detected.)
Use the SW5 to check operation. (See the operation manual.)

■ Frequency characteristic

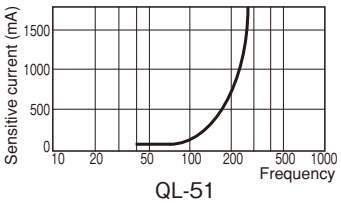

■ External connection diagram

Wiring example of three-phase three-wire type

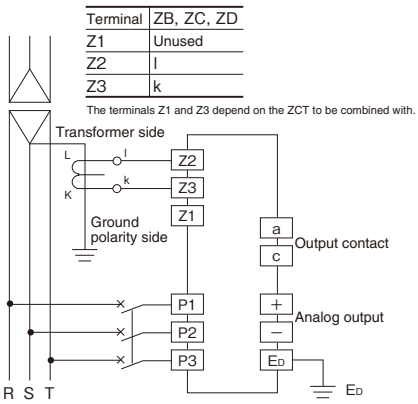

Wiring example of single-phase three-wire type

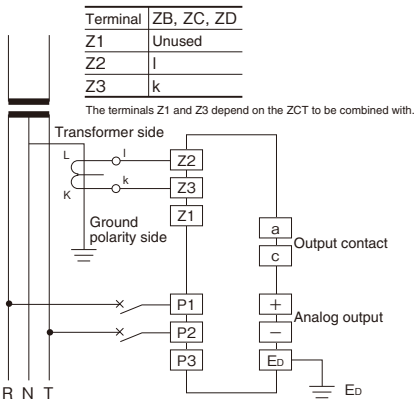

■ Dimension, mm

QL-51F (exposed type)

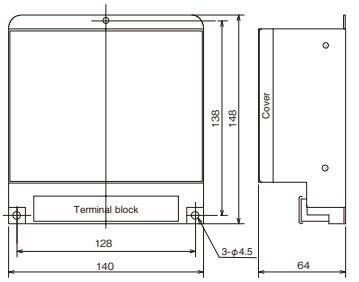

Note) The specifications of the terminal are the same as those of the terminal of the QL-51B.

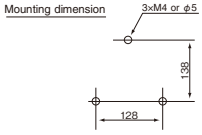

AC Power Regulators, Noise Suppression Filters Control Power Transformers

		Page
AC Power Regulators	Quick selection guide	D2-1
	PWMAPR-M series	D2-2
	PWM-APR series	D2-4
	APR-N series	D2-6
	APR-D series	D2-22
	APR-αA series	D2-38
	Applications	D2-42
Noise Suppression Filters	Quick selection guide	D2-43
	RNFTD, RNFDS series	D2-44
	RNFTC series	D2-46
	RNFMC series	D2-49
	RNFHA series	D2-52
	RNFTS, RNFMS series	D2-55
	RNFT, RNFM series	D2-57
	Application and Mounting Methods	D2-59
	Dangers/Warnings	D2-62
	RNFT series	D2-63
Control Power Transformers	CU1F, CU3F	D2-65
Voltage Fault Countermeasure Devices	TRAFY FFT Series	D2-72
Switching Power Supplies	Rail Mounting Type CY3 Series	D2-81

MINIMUM ORDERS

Orders amounting to **less than ¥10,000** net per order will be charged as ¥10,000 net per order plus freight and other charges.

WEIGHTS AND DIMENSIONS

Weights and dimensions appearing in this catalog are the best information available at the time of going to press. FUJI ELECTRIC FA has a policy of continuous product improvement, and design changes may make this information out of date.
Please confirm such details before planning actual construction.

INFORMATION IN THIS CATALOG IS SUBJECT TO CHANGE WITHOUT NOTICE.

AC power regulators

■ Quick selection guide

Series name	Application	Features	External appearance	Series		Page
				Type	Input voltage	
Single-phase PWMAPR-M	・High-precision constant voltage power supply for test and lab equipment ・High-precision DC power supply in combination with rectifier ・Stabilized power supply for areas susceptible to voltage fluctuations ・Heater control ・Dimmer for various lighting devices ・Motor control	・Achieves sine wave output by utilizing the PWM control method via an IGBT element ・No harmonic suppression measures required		**RPME2□□□-M**	200-240 V	D2-2
Three-phase PWM-APR				**RPWD2□□□-1C■**	200-240 V 200-220 V	D2-4
Single-phase APR-N	・Heater control ・Dimming of incandescent lamps and LEDs ・Vibrator ・DC power supply in combination with rectifier	・Multi function ・Compatible with various applied loads ・Various feedback control functions ・Various current and voltage types ・Phase control, cycle control ・Built-in quick breaking fuse		**RPNE2□□□-□■**	100-240 V	D2-6
				RPNE4□□□-□■	380-440 V 380-480 V (UL, CE specs)	
Three-phase APR-N				**RPNW2□□□-□■**	200-240 V	
				RPNW4□□□-□■	380-440 V 380-480 V (UL, CE specs)	
Single-phase APR-D	・Heater control ・Dimming of incandescent lamps	・Low price ・Compact and lightweight ・Supports various configuration inputs ・Compatible with various applied loads ・Phase control, cycle control		**RPDE2□□□-□■**	100-240 V	D2-22
Three-phase APR-D				**RPDW2□□□-T■**	200-240 V	
				RPDW4□□□-T■	380-440 V 380-480 V (optional operation transformer)	
APR-αA (Single-phase)	・Heater control ・Dimming of incandescent lamps	・Low price ・Compact and lightweight		**RPAE2□□□**	100-110 V 200-220 V Common	D2-38

D2

AC Power Regulators
PWMAPR-M series

Launch of PWMAPR-M, the digital control version of PWMAPR Range expanded to applications not possible with previous power regulators

80 A type: RPME2080-M

■ Features

- Uses our unique PWM control method to eliminate the need for harmonic current countermeasures
- Does not negatively affect the load power factor, therefore saves energy
- Sinusoidal output enables use even as a power supply system for testing
- Equipped as standard with a VLR function (voltage limiting) effective for loads such as lights
- Equipped as standard with setting indicators for increased functionality*1
- Compared with conventional products, volume: 36% reduction, mass: 40% reduction, installation area: 25% reduction
- Various communication units*2 and analog/digital IO board slots are available
- Compliant with RoHS directives

*1: Feedback functions for rated current, rated voltage, rated power, etc. and gradient settings, etc. can also be configured.
*2: Modbus RTU, DeviceNet, CC-Link, PROFIBUS, etc.

■ Operating principles

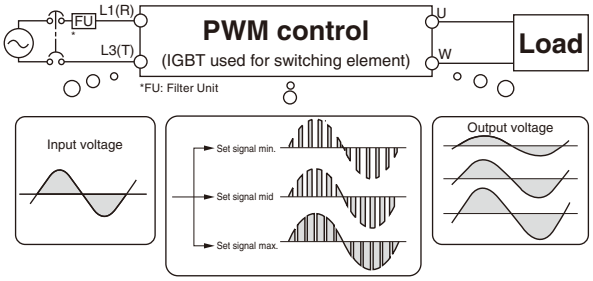

■ Advantages of deployment

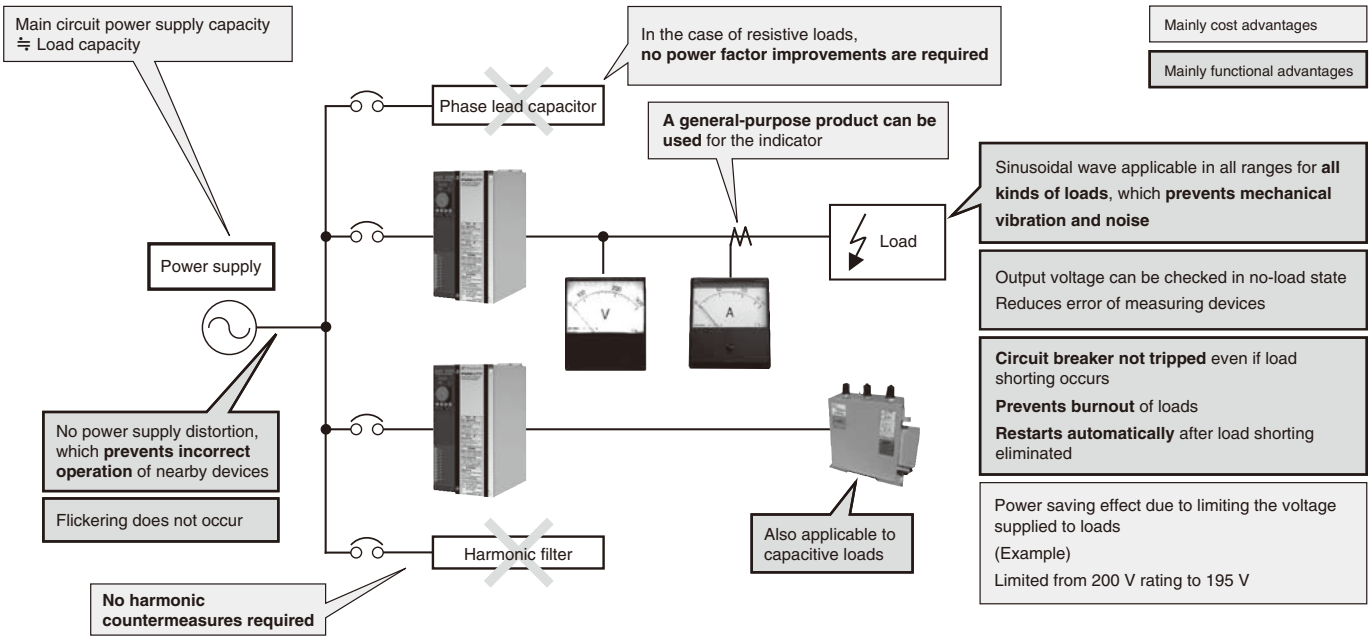

■ Advantages due to harmonic current not occurring

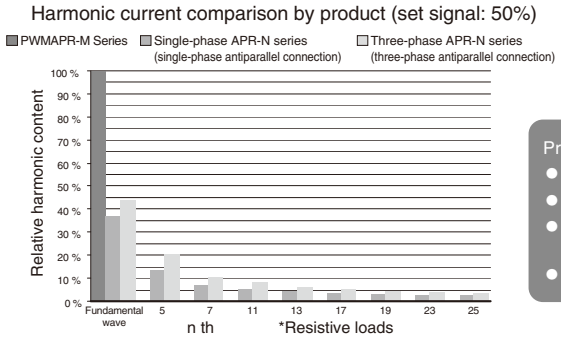

The PWMAPR-M series consists of APR that do not negatively affect the power supply quality.

Prevents the following caused by harmonic current
- Prevents overheating and burnout
- Restricts mechanical vibration and noise
- Prevents incorrect operation and abnormal control of nearby devices
- Reduces indicator error

Reduces burden of equipping high cost active filters and passive filters

■ Ordering information (requested type number nomenclature)

RPM E 2 080 – M – Z70 / UL

For items with no specification, fill in - and / in the order.

Model class

Model	Code
PWMAPR-M	RPM

Number of phases

Number of phases	Code
Single-phase	E

Input voltage

Input voltage	Code
200-240 V	2

International safety standard

International safety standard	Code
No specification	Blank
UL. cUL, CE marking compliance	UL (single-phase 80 A only)

Special specification

Special specification	Code
Standard	Blank
Yes	Z special specification No. (2 digits)

Control method

Control method	Code
Multi control method	M

Set to rated voltage control at shipment. The control method can be selected with the setting indicators.

Output current

Output current	Code
20 A	020
80 A	080
160 A	160

* For the specification combinations that can be produced and the launch timing, refer to "■ Ratings, types (= product code) and delivery times" below.
(Note 1) Special specification list

Optional specification name	Details	Type
Printed circuit board coating	Equipped with a printed circuit board to which a coating agent has been applied	**RPM□□□□□-M-Z70**

D2

■ Other options (sold separately)

Part name	Type	Specifications	Delivery time
Setting device (Note 5)	**RPN001**	1 kΩJ 2.5 W; with nameplate, knob, name label sheet	○
Connection cable for remote operation	**RPN002-1**	For APD2 separate installation, length 1 m	○
	RPN002-3	For APD2 separate installation, length 3 m	○
A/D IO board	**RPM003-AA**	Analog/digital input/output board	○
Communication unit	**RPM003-AM**	Supports Modbus/RTU	○
	RPM003-AC	Supports CC-Link	○
	RPM003-AD	Supports DeviceNet	Launched at a later date
	RPM003-AP	Supports PROFIBUS	Launched at a later date

(Note 5) The setting device (used for manual setting, gradient setting, HIGH setting, etc.) is ordered separately.

◎	Standard products	○	Limited standard products		Order products

■ Ratings, types (= product code) and delivery times

Number of phases	Input voltage [V]	Rated current [A]	Rated load capacity [kVA] (Note 6)	Type (= product code)	Delivery time
Single-phase	200-240	20	4 – 4.8	**RPME2020-M**	○
		80	16 – 19.2	**RPME2080-M**	○
		160	32 – 38.4	**RPME2160-M**	○

(Note 6) The rated load capacity is the value calculated from the rated voltage X rated current (X$\sqrt{3}$: three-phase).

* Please consult us separately for details such as the launch time for specifications not described above.

◎	Standard products	○	Limited standard products		Order products

AC Power Regulators
PWM-APR series

Evolved from thyristor to IGBT. PWM-APR outputs sinusoidal voltage.

The PWM-APR series uses a PWM control method that is driven by our unique power electronics conversion technology, enabling the output of sinusoidal voltage. Compared to AC power regulators that use the thyristor phase control method, this method improves the distortion factor and input power factor of the output voltage waveform.
Complies with the harmonic suppression countermeasure guidelines of certain customers.

PWM-APR type

■ Features

● Uses the PWM control method

- A PWM control AC power regulator equipped with an input/output harmonic suppression function that uses our unique circuit method.
- Outputs 0 to 97% of the input voltage as sinusoidal voltage.
- Unlike the conventional phase control method that uses a thyristor, the input power factor is the same as the load power factor. In addition, the required power supply capacity is the same as the load capacity.
- IGBT is used for the switching element to achieve high efficiency.

● Applicable to various loads

- Applicable to resistive loads, inductive loads and rectified loads.
- Also applicable to capacitive loads, which is not possible with AC power regulators that use a thyristor.
- Can also be used instead of a phase lead capacitor (as a simple capacitor bank) for lagging current compensation. In this case, the lead current can be changed continuously from 0 to the maximum current value, unlike conventional capacitor banks, where the value can only be adjusted in steps.

● Equipped with a load shorting protection function

- Equipped with a load shorting protection function to automatically detect load shorting and limit the current instantaneously.

● No harmonic countermeasures required

- PWM-APR is equivalent to circuit category 6 (single-phase) and circuit category 5 (three-phase) of the harmonic suppression countermeasure guidelines, and the conversion factor is K5 = 0 and K6 = 0. Therefore, the series is outside the scope of the guidelines and no harmonic countermeasures are necessary.

"Conversion factor Ki" of AC power regulator

Circuit category	Circuit type		Conversion factor Ki	Main usage examples
5	Self-excited three-phase bridge (Voltage type PWM control) (Current type PWM control)		K5=0	・Uninterruptible power systems ・Communications power systems ・Elevators ・Distributed power supplies for system interconnection
6	Self-excited single-phase bridge (Voltage type PWM control)		K6=0	・Communications power systems ・AC type electric railway cars ・Distributed power supplies for system interconnection
7	AC power regulation systems	Resistive loads	K71=1. 6	・Reactive power regulation systems ・Large lighting systems ・Heaters
		Reactance loads (Except for AC arc furnaces)	K72=0. 3	

● Wider range of applications

- Because the output voltage waveform is a sinusoidal wave, application is possible in fields that are difficult for an AC power regulator that uses a thyristor. (Rated voltage power supply, variable transformer replacement, etc. However, linearity is negatively affected when the output is 10% or less.)

■ Operating principles

- PWM (Pulse Width Modulation) control is a control method that applies a new main circuit structure and harmonic switching to control the output voltage amplitude. As a result, the output voltage waveform is a sinusoidal wave, which suppresses harmonic current.

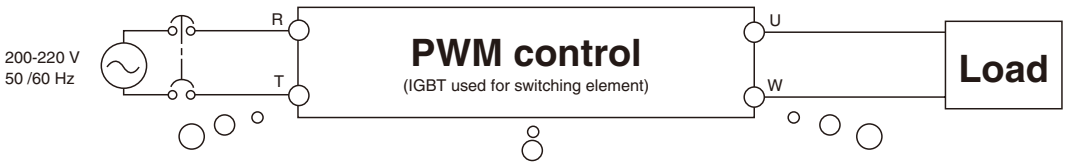

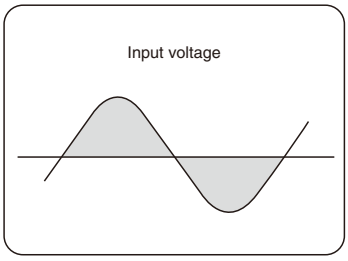

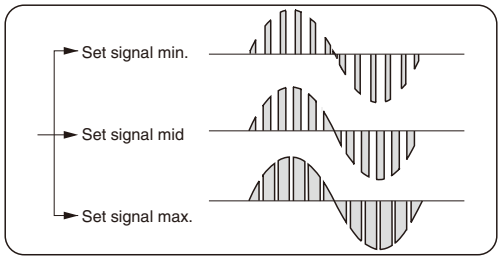

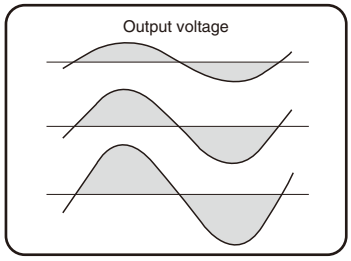

■ Ordering information (type = product code)

RPW E 2 080 - 1 C N - N

(1) Model class

Model	Code
PWM-APR series	RPW

(2) Number of phases

Number of phases	Code
Single-phase	E
Three-phase	D

(3) Main circuit input voltage

Main circuit input voltage	Code
200-220 V	2

(4) Rated output current

Rated output current	Code
40 A	040
80 A	080
160 A	160
240 A	240

(5) Development modification order

(6) Control method

Setting method	Code
AC rated voltage control + AC current limiting (AC AVR + AC CLR)	C

(7) Setting method

Setting method	Code
Current signal: DC 4 to 20 mA (automatic control) Voltage signal: DC 1 to 5 V	N
Variable resistor (manual control)	A
Two-position control (High-Low control)	B
With a gradient setting in the automatic settings (N)	C
With a gradient setting in the automatic - manual switch (C and A switching)	E
Without a gradient setting in the automatic - manual switch (N and A switching)	F

(8) Specification

Specification	Code
Standard	N

D2

■ Ratings, types (= product code) and specifications

Item			Specifications					
Type (= product code)			**RPWE2080-1CN-N**	**RPWE2160-1CN-N**	**RPWE2240-1CN-N**	**RPWD2040-1CN-N**	**RPWD2080-1CN-N**	**RPWD2160-1CN-N**
Applicable loads			Resistive load, inductive load, transformer primary control, rectifier primary control, capacitive load			Resistive load, inductive load, rectifier primary control, capacitive load (Note 1)		
Rated output current (A)		200 V series	80	160	240	40	80	160
Input power supply	Number of phases, voltage, frequency		Single-phase; 200 to 220 V; 50/60 Hz			Three-phase; 200 to 220 V; 50/60 Hz		
	Voltage/frequency allowable fluctuation (performance guarantee)		Voltage: ±10%, Frequency: ±1 Hz					
	Required power supply capacity (kVA)	200 V	16	32	48	13.9	27.7	55.4
		220 V	17.6	35.2	52.8	15.2	30.5	61.0
Cooling method			Air cooling					
Total mass (kg)		200 V series	25	36	68	35	55	75
Control	Waveform control method		PWM control					
	Output voltage adjustment range		0 to 97% of input voltage			0 to 95% of input voltage		
	Set signal		Variable resistor: 1 kΩ 2.5 W Current signal: DC 4 to 20 mA (Zin = 250 Ω) Voltage signal: DC 1 to 5 V (Zin = 1 kΩ)					
	Soft start and soft up/down		1 second					
	Gradient setting range		0 to 100% of set signal					
	Feedback control method		AC rated voltage control + AC current limiting control (AC AVR + AC CLR)					
Protection	Load shorting: (1)		Protected by instantaneous current limiting.					
	Overcurrent		Protected by current limiting (AC CLR) that detects overcurrent. 100 to 0% of rated output current					
	Heatsink overheat: (2)		Stopped after detection of abnormal temperature rise in the heatsink. Recovers automatically after the heatsink temperature drops.					
	Open phase/reverse phase: (3)		–			Stopped after detection of open phase/reverse phase in input voltage.		
	Input voltage drop protection		Stopped after detection of input voltage drop (-15% or less of rated voltage). Recovers automatically after power restored.					
	IGBT abnormality: (4)		Stopped after detection of abnormality in main circuit element (IGBT).					
	Warning output		Outputs respective contact signal when (1), (2), (3) or (4) is abnormal (1a contact, contact capacity: AC 220 V, 3 A)					
Environment	Location of use		Altitude 1000 m or lower, no corrosive gas, dust or vibration.					
	Ambient temperature		0 to +55°C (When exceeding +40°C, reduce the rated output current value.)					
	Ambient humidity		30 to 90% RH					
Insulation	Dielectric strength (to ground)		AC 2000 V, for 1 minute (main circuit)					
	Insulation resistance (to ground)		20 MΩ or higher with 500 V megohmmeter (main circuit)					
Classification			○	○	○	○	○	○

(Note 1) Please consult us regarding transformer primary control.

AC power regulators, APR-N series

■ Description

The APR-N series provides high functionality with improved functions and performance as a successor to the APR-MX2 series.

■ Features

• Thyristor pure reverse parallel (6-arm) is standardized (3-phase).

· Almost no even harmonic current is generated, and so countermeasures for harmonic current are easy compared with systems with mixed reverse parallel.
· Magnetic flux deviation in transformer primary control is unlikely to occur, and so the transformer can be more compact and highly efficient.
· Control characteristics are improved for unbalanced loads.

Load current waveform example
(phase angle α = 90°)

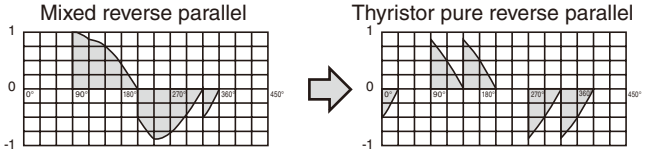

• Imbalance compensation (3-phase)

Imbalance compensation can be performed by making settings using the setting and display module if there is a load imbalance or power supply imbalance.

• 3-phase, 4-wire circuits supported (3-phase models with control method T or A)

Linearity of ±3% FS is achieved for 3-phase, 4-wire circuits. (Optional specifications: Specify ZB4.)
Also, connection of an external diode to the neutral phase is not required.
Note: The control phase angle is different from the standard 3-phase models.
Do not use this for 3-phase, 3-wire circuits.

• Switch between phase control and cycle control.

· Flicker prevention cycle control (staggering the power application cycle of 50 units max.) enables distributed load operation. (Optional specifications: ZAP or ZAX is required.)
· Perform cycle control for loads with a large change in resistance value (e.g., pure metal) using inrush current automatic suppression control (composite control) independent of soft start time.(models with control method A only).
· Switch between phase control and cycle control during operation.
(using a display device or network communications).

• Built-in high-precision feedback control (except models with control method T)

Control accuracy of ±1% FS for constant current control, constant voltage control, and constant power control.
Built-in high accuracy control circuits improve temperature control accuracy, save space, reduce wiring, and help decrease total costs.

3-phase, 20A with display (ZA ■ B3) | 3-phase, 100A with communications board (ZA ■) | Single-phase, 20A

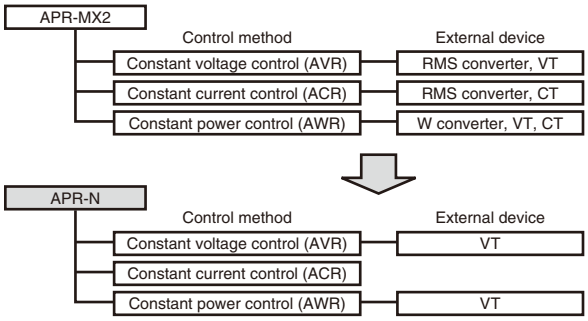

Note: The figure above is for single-phase.

• Independent settings for soft start time and soft increase/decrease time

• Built-in advanced heater burnout detection (except models with control method T. This functionality requires a communications board and a setting and display module.)

Advanced heater burnout detection (equivalent to LA-3A) enables detecting burnouts in 1 of 10 elements for single-phase operation.
Burnouts can be detected in 1 of 9 elements for 3-phase, 3-wire connections (line current detection).
Burnouts can be detected in 1 of 15 elements for 3-phase, 4-wire connections (line current detection).
Use in applications for heaters of the same material and same capacity (e.g., alloy, pure metal, or silicon carbide).

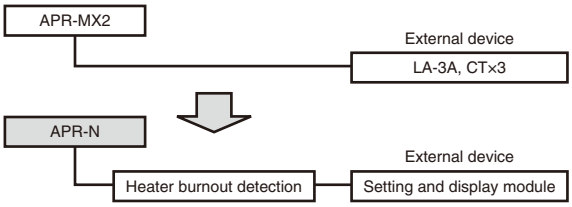

Note: The figure above is for 3-phase.
An external CT is required for single phase.

• Enhanced error detection

A total of 12 errors, including major failures and minor failures, are displayed using alarm LEDs.
· Thyristor error (except models with control method T)
· Current limit detection (except models with control method T)
· External setting input not connected (burnout)
· Cooling fan service life warning by monitoring the fan speed (models with fan only)
These and more have been added.

• Enhanced optional accessories

· The setting and display module enables a variety of monitoring, high-accuracy digital settings, and function settings.
· Adding a communications board enables a wide range of communications specifications.
· Easily perform operation or monitoring and change settings by linking to a PLC or touch panel.
· Finger guard (IP20)
These and more have been added.
Refer to pages D2-8 and D2-9 for details.

• Full lineup of products compliant with international standards

Note: Inquire about the status of compliance.

• Revised Chinese version RoHS compliant
All models of APR-N series (single phase, three phase) are standard compliant.

• Compliance with RoHS Directive
The APR-N provides compliance with the European Union's RoHS Directive on the restriction of use of hazardous substances as a standard feature.
The APR-N is ideal for environments in which the use of these six hazardous substances is restricted.
Six hazardous substances: Lead, mercury, cadmium, hexavalent chromium, polybrominated biphenyls (PBB), and polybrominated diphenyl ether (PBDE)

AC Power Regulators
APR-N series

■ Type and ratings

Type number (i.e., product code)	No. of phases	Input voltage (V)	Rated current (A)	Rated load capacity (kVA) (*1)	Built-in rapid fuse (*2)
RPNE2020-T	Single-phase	100-240	20	2-4.8	CR2LS-30G
RPNE2020-A					
RPNE2045-T			45	4.5-10.8	CR2LS-75G
RPNE2045-A					
RPNE2060-T			60	6-14.4	CR2LS-100G
RPNE2060-A					
RPNE2100-T			100	10-24	CR2L-150G
RPNE2100-A					
RPNE2150-T			150	15-36	CR2L-200G
RPNE2150-A					
RPNE2250-T			250	25-60	CS5F-350
RPNE2250-A					
RPNE2350-T			350	35-84	CS5F-500
RPNE2350-A					
RPNE2450-T			450	45-108	CS5F-600
RPNE2450-A					
RPNE2600-T			600	60-144	CS5F-800
RPNE2600-A					
RPNE2800-T, RPNE2800-A			800	80-192	CS5F-800
RPNE2A00-T, RPNE2A00-A			1000	100-240	CS5F-1000
RPNE2A20-T, RPNE2A20-A			1200	120-288	CS5F-1200
RPNE2A50-T, RPNE2A50-A			1500	150-360	CS5F-1500
RPNE4020-T		380-440	20	7.6-8.8	CR6L-30G
RPNE4020-A					
RPNE4045-T			45	17.1-19.8	CR6L-75G
RPNE4045-A					
RPNE4060-T			60	22.8-26.4	CR6L-100G
RPNE4060-A					
RPNE4100-T			100	38-44	CR6L-150G
RPNE4100-A					
RPNE4150-T			150	57-66	CR6L-200G
RPNE4150-A					
RPNE4250-T			250	95-110	CS5F-350
RPNE4250-A					
RPNE4350-T			350	133-154	CS5F-500
RPNE4350-A					
RPNE4450-T			450	171-198	CS5F-600
RPNE4450-A					
RPNE4600-T			600	228-264	CS5F-800
RPNE4600-A					
RPNE4800-T, RPNE4800-A			800	304-352	CS5F-800
RPNE4A00-T, RPNE4A00-A			1000	380-440	CS5F-1000
RPNE4A20-T, RPNE4A20-A			1200	456-528	CS5F-1200
RPNE4A50-T, RPNE4A50-A			1500	570-660	CS5F-1500

■ Type and ratings

Type number (i.e., product code)	No. of phases	Input voltage (V)	Rated current (A)	Rated load capacity (kVA) (*1)	Built-in rapid fuse (*2)
RPNW2020-T	3-phase	200-240	20	6.9- 8.3	CR2LS-30G
RPNW2020-A					
RPNW2045-T			45	15.6-18.7	CR2LS-75G
RPNW2045-A					
RPNW2060-T			60	20.8-24.9	CR2LS-100G
RPNW2060-A					
RPNW2100-T			100	34.6-41.6	CR2L-150G
RPNW2100-A					
RPNW2150-T			150	52.0-62.4	CR2L-200G
RPNW2150-A					
RPNW2250-T			250	86.6-103.9	CS5F-350
RPNW2250-A					
RPNW2450-T			450	155.9-187.1	CS5F-600
RPNW2450-A					
RPNW2600-T			600	207.8-249.4	CS5F-800
RPNW2600-A					
RPNW2800-T, RPNW2800-A			800	277.1-332.6	CS5F-800
RPNW2A00-T, RPNW2A00-A			1000	346.4-415.7	CS5F-1000
RPNW2A20-T, RPNW2A20-A			1200	415.7-498.8	CS5F-1200
RPNW2A50-T, RPNW5A20-A			1500	519.6-623.5	CS5F-1500
RPNW4020-T		380-440	20	13.2-15.2	CR6L-30G
RPNW4020-A					
RPNW4045-T			45	29.6-34.3	CR6L-75G
RPNW4045-A					
RPNW4060-T			60	39.5-45.7	CR6L-100G
RPNW4060-A					
RPNW4100-T			100	65.8-76.2	CR6L-150G
RPNW4100-A					
RPNW4150-T			150	98.7-114.3	CR6L-200G
RPNW4150-A					
RPNW4250-T			250	164.5-190.5	CS5F-350
RPNW4250-A					
RPNW4450-T			450	296.2-342.9	CS5F-600
RPNW4450-A					
RPNW4600-T			600	394.9-457.3	CS5F-800
RPNW4600-A					
RPNW4800-T, RPNW4800-A			800	526.5-609.7	CS5F-800
RPNW4A00-T, RPNW4A00-A			1000	658.2-762.1	CS5F-1000
RPNW4A20-T, RPNW4A20-A			1200	789.8-914.5	CS5F-1200
RPNW4A50-T, RPNW4A50-A			1500	987.3-1143.2	CS5F-1500

Note: *1 The value for the rated load capacity is calculated using the following equation.
Rated load capacity (single-phase) = Rated input voltage x Output current
Rated load capacity (3-phase) = $\sqrt{3}$ x Rated input voltage x Output current
*2 To replace only the built-in rapid fuse, use the type number that is listed. For models with a microswitch (CR2L, CR2lS, CR6L), replace G with S.
If the unit is certified for UL standards, the built-in rapid fuse is also certified for UL standards.

AC Power Regulators
APR-N series

■ Specification

Item		Specification								
Main circuit power supply	Single-phase 3-phase	100 to 240V, 380 to 440V, 380 to 480V AC±10%, 50/60Hz ±2.5Hz (automatic frequency detection and switching) 200 to 240V, 380 to 440V, 380 to 480V AC±10%, 50/60Hz±2.5Hz (automatic frequency detection and switching)								
Rated current (A)	Single-phase (ambient temperature of 50°C)	20	45	60	100	150	250	350	450	600
	3-phase (ambient temperature of 40°C)							–		
Cooling method		Self-cooled				Fan-cooled				
Control circuit power supply	Power supply voltage	Single-phase: 100 to 240V AC ±10% (*1.) 3-phase: 200 to 240V AC±10%								
	Power supply capacity (VA) single-phase	34				40	45			
	Power supply capacity (VA) 3-phase	39				58	72	–	78	128
Internal heat generation (W)	Single-phase	47	74	89	133	203	294	377	510	700
	3-phase	90	170	210	330	560	840	–	1490	2070
Applicable load	Phase control	Resistive load, inductive load, transformer primary side, rectifier primary side								
	Cyclic control	Resistive load, inductive load, transformer primary side (Applicable only for single-phase models with control method P.)								
Control	Waveform control	Thyristor pure reverse parallel connection (single-phase and 3-phase) Phase control or cyclic control (single-phase: intermittent, 3-phase: continuous) (switched with DIP switch)								
	Output voltage adjustment range	0% to 100% (effective value) of main circuit power supply voltage (except thyristor voltage drop)								
	I/O characteristics	Effective value linear characteristics and linearity ±3% FS max. (for a resistive load and for a setting signal of 10 to 90%.)								
	Power supply voltage compensation	Compensation for output fluctuation to ±3% FS max. relative to ±10% fluctuation in power supply voltage (for a setting signal of 10% to 90%, applies to models with control method T or A.)								
	Power supply voltage compensation setting	Fine tuning of max. output voltage, built-in PVC knob (applies to models with control method T or A).								
Setting	Soft start time and soft up/down time setting	Built-in ST knob. 0.5 to 10s or 5 to 100s. Soft up/down time can be set to 0.5s (switched with DIP switch).								
	CLR (current limit) setting	Built-in CLR knob. 0% to 102% of rated current (not for models with control method T)								
	P adjustment	Built-in P knob. 0.1 to 0.5 times proportionate gain (not for models with control method T)								
	I adjustment	Built-in I knob. Integral time of 25ms to 125ms (not for models with control method T)								
	Gradient setting	0% to 100% of output voltage 1. External variable resistor: 1kΩ (B characteristics: 1/2W min.), 2. 1 to 5V DC signal (1 and 2 switched with DIP switch), 3. Built-in GRD knob (optional)								
	Base load setting	0% to 100% of output voltage. Built-in BL knob (optional). Reverse gradient characteristics are enabled using combination with gradient settings.								
	Manual setting	External variable resistor: 1kΩ (B characteristics 1/2W min.)								
	Automatic setting	Current signal: 4 to 20mA DC (Zin = 100Ω) Voltage signal: 0 to 5V DC, 1 to 5V DC (Zin = 10kΩ) (switched with DIP switch)								
Function	Run/stop switching signal (RUN)	No-voltage contact input (contact voltage: 12V DC, 10mA)								
	Auto/manual switching signal (RUN)	No-voltage contact input (contact voltage: 12V DC, 10mA)								
	Alarm reset signal (RST)	No-voltage contact (momentary) input (contact voltage: 12V DC, 10mA)								
	Automatic inrush current suppression	Current is suppressed by switching the phase angle so that the current is 90% max. of the current limit setting value when cyclic control is used. (Applies only to models with control method A.) Applicable load: Alloy, nichrome, pure metal, or silicon carbide.								
	Feedback enable/ disable switching	DIP switch ON side: Purchased control method OFF side: Models with control method A (*2)								
	Parallel operation master/slave selection	DIP switch ON side: Master OFF side: Slave Max. number of connected slaves: 50 Communications board (RPN003-AP or RPN003-AX) and connection cable required (optional).(*3)								
	Network communications	Communications standard: RS-485 compliant 2-wire half-duplex asynchronous Protocol: Modbus RTU compliant, Max. number of connectable units: 31 Communications board (RPN003-AM), setting and display module (APD1), and connection cable for remote operation (RPN002-□) required (optional).								

■ Specification

Item		Specification
Display		1. Drive monitor display (green LED lit at output), 2. Alarms and errors displayed with red, yellow, and green LEDs, 3. Digital display using APD1 (optional).
Alarm contact output		Relay contacts, major failure (SPST-NO contacts, 250V AC, 1A), minor failure (SPST-NO contacts, 250V AC, 1A)
Error detection and protection	Overcurrent	Current at approx. 120% min. of rated current detected by built-in CT (except models with control method T)
	Thyristor error	Thyristor short-circuit failure detected at output stop or output at 0% (except models with control method T)
	Rapid fuse blowout	Detected at contact welding of built-in rapid fuse. Main element protection.
	Overheat error	Detected with temperature sensor (Single-phase: fan-cooled models only, 3-phase: all models)
	CPU memory error	Memory error detected at startup
	Communications error (optional)	Detected when communications cannot be performed correctly using the communications board (optional).
	Heater burnout	"Burnout detection determined by comparing the built-in HT knob (heater burnout judgment setting level 3 to 100%) and below the current value. (Standard function. Single-phase only.) (*4)"
	External setting input not connected	"Detected when 1. The current for the voltage setting signal is not connected or disconnected (4mA max. or 1V max. or 2. When the manual or gradient setting is not connected. (*5.) "
	Power supply error	Detected when the power supply frequency is not 45 to 65 Hz.
	Current limit detection	Detected when a load current that is the same as the current limit set value is detected.
	Undervoltage	Detected when the control power supply voltage drops below 80% of the rated voltage.
	Overvoltage	Detected when the control power supply voltage exceeds 115% of the rated voltage.
	Cooling fan service life (fan-cooled models only)	Detected when the rated number of rotations drops below 70% to 200rpm by monitoring the number of revolutions of the cooling fan.
Feedback control (phase control only)		AC CLR (models with control method A) AC ACR + AC CLR (models with control method B) AC AVR + AC CLR (control method type C) AC AWR + AC CLR (models with control method D) DC AVR + AC CLR (models with control method E) DC ACR + AC CLR (models with control method F) Control accuracy: ±2% FS for AC ACR, otherwise, ±1% FS AC CLR functionality has priority for models with control method B, C, D, E or F. Accuracy conditions: Power supply voltage fluctuation of ±10% with a constant load, or 1 to 4 times the load fluctuation at a constant power supply voltage.
Environment	Ambient temperature	–5 to 50°C (decrease relative to rated current if ambient temperature is between 50 and 55°C) –5 to 40°C (decrease relative to rated current if ambient temperature is between 40 and 55°C)
	Storage temperature	-20 to 60°C
	Ambient humidity	30% to 90% RH (no condensation)
	Others	Free from corrosive gas, dust, or vibration. Indoor use. Altitude up to 1000 m.
Insulation	Withstand voltage (main circuit to ground)	2000V AC, 1 minute (200 to 240V models), 2500V AC, 1 minute (380 to 440V models)
	Insulation resistance (to ground)	10MΩ min. (500V DC megger)

Note: *1 Be sure to perform operation with a rated voltage of either 110V (100V system) or 220V (200V system).
Adjust the maximum output voltage using the PVC setting if the rated voltage is 115 to 120V (100V system) or 230 to 240V (200V system). (models with control method T or A only)
*2 Use for test operation (i.e., operation test with temporary load) with models with control method B, C, D, E, or F.
The control method will not change even if a model with control method T or A is used on the OFF side.
*3 The RPN003-AX is compatible with the MX series and MX2 series.
*4 Heater burnout detection operates for single-phase phase control except for models with control method T.
For cyclic control, load open detection is used.
A setting and display module is required for advanced heater burnout detection (single-phase and 3-phase.)
*5 The "external setting input not connected alarm" does not operate if the voltage signal is set to 0 to 5V DC.
*6 Inquire about models with a rated current of 800A, 1000A, or 1200A.

AC Power Regulators
APR-N series

■ Type number nomenclature

RPN □□□□□ – □■ – ■■■ – ■■ / ■■

Note: *1 In the type number, the white boxes are required items and the black boxes are optional items.
For items with no specification, fill in the box with a hyphen or slash.

APR-N series

No. of phases

E: Single-phase thyristor pure reverse parallel
W: 3-phase thyristor pure reverse parallel

Input voltage

2: 100 to 240V (single-phase)
200 to 240V (3-phase)
4 (*2): 380 to 440V, 380 to 480V
9: Special voltage

A transformer is enclosed if the input voltage is not 100 to 240V.
Inquire about special voltage.
Note: *2 Specify UL or CE as the international safety standard for 380 to 480V.

Rated current

020: 20A
045: 45A
060: 60A
100: 100A
150: 150A
250: 250A
350: 350A (single-phase only)
450: 450A
600: 600A
800: 800A
A00: 1000A
A20: 1200A

Inquire about 800A, 1000A, and 1200A.

Control method

International safety standards

Blank: No specification
UL: Compliant with UL, cUL, and CE marking
CE: Compliant with CE marking

Inquire about the status of compliance.

Others

Blank: No specification
01: No operation transformer
02: Test report (Japanese and English) enclosed
03: No operation transformer, test report (Japanese and English) enclosed

The test report is in the Fuji Electric standard format.
The report can be made with special specifications if specified by the customer.
This is not displayed in the unit type number.

Specification

Blank: Standard
Z (*3): Unit optional accessories

Setting device

Blank: No
1: Setting device, 1 set
2: Setting devices, 2 sets
3: Setting devices, 3 sets
4: Setting devices, 4 sets

Setting device type: RPN001 (variable resistor, nameplate, knob, and adhesive sheet)
This is not displayed in the unit type number.

Control method

Code	Control method	Required external devices (sold separately)	Control method overview
T	No feedback function	–	No built-in CT. (Functions such as overcurrent protection and heater burnout detection are not included.) This method applies to loads with small changes in resistance, such as alloy heaters.
A	Current CLR	–	CLR = Current limit: Output voltage is limited so that the output current does not exceed the CLR setting. This method is used for applications (such as pure metal heaters) for which the maximum current that flows to the load must be limited.
B	AC ACR + AC CLR	–	ACR = Constant current control: Control is performed so that the output current is proportional to the set value. This method is used for applications for which the current must be constant, such as pure metal heaters or direct power application heating.
C	AC AVR + AC CLR	VT (type number: PT-5S) single-phase: 1 VT (type number: PT-5S) 3-phase: 2	AVR = Constant voltage control: Control is performed so that the output voltage is proportional to the set value. This method is used for applications that require output voltage accuracy.
D	AC AWR + AC CLR	VT (type number: PT-5S) single-phase: 1 VT (type number: PT-5S) 3-phase: 2	AWR = Constant power control: Control is performed so that the output power is proportional to the set value. This method is used for applications that require heat level control, such as silicon carbide heaters or sensorless operation.
E	DC (or AC) AVR + AC CLR (feedback input: 0 to 10V DC)	Isolating converter (high-speed response)	AVR = Constant voltage control: The functionality is the same as for current given above. This method is used for applications that require accuracy, such as the transformer secondary side or rectifier secondary side. Control is performed so that the feedback value is 10V when the set value is 100%.
F	DC (or AC) ACR + AC CLR (feedback input: 0 to 10V DC)	Isolating converter (high-speed response)	ACR = Constant current control: The functionality is the same as for current given above. This method is used for applications that require accuracy, such as the transformer secondary side or rectifier secondary side. Control is performed so that the feedback value is 10V when the set value is 100%.
P	Transformer primary control using cyclic control	Enclosed CT (type number: CT-5S)	Single-phase only. This method can be applied to isolating transformers and resistive loads (resistance value changes of 20% max.). Output will stop due to load error if the load drops below 30% of the APR rated capacity.

Specify a model with control method E if connection is made to an already installed W converter (W-2).

Note: *3 Unit optional accessories

Main optional specification name	Description	Option specification number (*4.)
Soft start time 0.05s min.	Soft start time variable range: 0.05 to 10s/0.05 to 100s	**RPN□□□□□-□■-Z06**
Built-in base load setting	Base load setting included on control printed circuit board	**RPN□□□□□-□■-Z07**
Built-in gradient setting	Gradient setting included on control printed circuit board	**RPN□□□□□-□■-Z43**
Control power supply separation	Control power supply terminal block (L11-L21-L31) internal wiring deletion	**RPNW□□□□-□■-Z72**
Communications board: Parallel operation supported (*5)	Flicker prevention and communications board for parallel operation	**RPN□□□□□-□■-ZAP**
Communications board: MX compatible parallel operation supported (*6)	MX and MX2-series compatible parallel operation communications board	**RPN□□□□□-□■-ZAX**
Communications board: Modbus RTU supported	Communications board for Modbus RTU	**RPN□□□□□-□■-ZAM**
APD1 + APD1 mounting bracket	APD1 and a connection cable are attached to the front of the unit.	**RPN□□□□□-□■-ZB3**
3-phase, 4-wire supported	Control board changed to 3-phase, 4-wire (models with control method T or A only)	**RPNW□□□□-□■-ZB4**
Function code change (*7)	Shipment made with the specified function code	**RPN□□□□□-□■-ZC■**
Input voltage: Special voltage supported (*8)	TR1-70R/E1 operation transformer enclosed	**RPNE9□□□-□■-ZE1**

Note: *4 To specify multiple unit option specifications, list the specification numbers after Z.
For example, the following is the order type number for a unit with the following options: Soft start time 0.05s min., communications board, parallel operation, and 3-phase, 4-wire.
Order type number: RPNW □□□□ - □■ -Z06APB4

*5 Not compatible with the MX series and MX2 series. Also, cyclic control cannot be performed using both single-phase and 3-phase.
When parallel operation is used, heater burnout detection cannot be used with the setting and display module for the slave device.

*6 Compatible with the MX series and MX2 series. Also, cyclic control cannot be performed using both single-phase and 3-phase.
When parallel operation is used, heater burnout detection cannot be used with the setting and display module for the slave device.

*7 Before shipment, settings are changed in-house using the setting and display module. A setting and display module is not enclosed at shipment. Each unit can be handled individually. Inquire for details.

*8 The primary side tap voltage for the TR1-70R/E1 operation transformer is 250, 254, 260, 265, 277, or 305V AC.

■ Other optional accessories (sold separately)

• Mounting bracket for external cooling installation

Single-phase (RPN004-E □□)

Type	Description
RPN004-E02	For RPNE□020-□
RPN004-E06	For RPNE□045-□ and RPNE□060-□
RPN004-E10	For RPNE□100-□
RPN004-E15	For RPNE□150-□
RPN004-E25	For RPNE□250-□
RPN004-E35	For RPNE□350-□
RPN004-E45	For RPNE□450-□
RPN004-E60	For RPNE□600-□

3-phase (RPN004-W □□)

Type	Description
RPN004-W02	For RPNW□020-□
RPN004-W06	For RPNW□045-□ and RPNW□060-□
RPN004-W10	For RPNW□100-□
RPN004-W15	For RPNW□150-□
RPN004-W25	For RPNW□250-□
RPN004-W45	For RPNW□450-□
RPN004-W60	For RPNW□600-□

• Main circuit terminal cover

3-phase (RPN006-W □□)

Type	Description
RPN006-W02	For RPNW□020-□
RPN006-W06	For RPNW□045-□ and RPNW□060-□
RPN006-W10	For RPNW□100-□
RPN006-W15	For RPNW□150-□
RPN006-W25	For RPNW□250-□
RPN006-W45	For RPNW□450-□
RPN006-W60	For RPNW□600-□

Note: The single-phase models are provided in standard models, and so there is no main circuit terminal cover available as an option.

• Finger guard

Single-phase (RPN005-E □□)

Type	Description
RPN005-E02	For RPNE□020-□
RPN005-E06	For RPNE□045-□ and RPNE□060-□
RPN005-E10	For RPNE□100-□
RPN005-E15	For RPNE□150-□
RPN005-E25	For RPNE□250-□
RPN005-E35	For RPNE□350-□
RPN005-E45	For RPNE□450-□
RPN005-E60	For RPNE□600-□

3-phase (RPN005-W □□)

Type	Description
RPN005-W02	For RPNW□020-□
RPN005-W06	For RPNW□045-□ and RPNW□060-□
RPN005-W10	For RPNW□100-□
RPN005-W15	For RPNW□150-□
RPN005-W25	For RPNW□250-□
RPN005-W45	For RPNW□450-□
RPN005-W60	For RPNW□600-□

• Feedback control CT and VT

Item	Type	Rated primary input	Rated secondary output
CT	CT-5S	20A, 45A, 60A 100A, 150A, 250A 350A, 450A, 600A	0.1A 5VA and Class 1
VT	PT-5S	100V, 110V	10V 5VA and Class 1
		200V, 220V	
		380V	
		400V, 440V	
		420V, 460V	
		440V, 480V	

Note: Number of primary pass-through turns for CT-5S: 5 turns for 20A, 3 turns for 45A, 2 turns for 60A, and 1 turn otherwise.
The primary voltage for PT-5S is a 2-tap input except for 380V.

• Setting and display module, communications board, and connection cable for remote operation

Item	Type	Name	Specification
Setting and display module	APD1	–	–
Cable	RPN002-1	Connection cable for remote operation	Length: 1m
	RPN002-3	Connection cable for remote operation	Length: 3m
	RPN002-5	Connection cable for remote operation	Length: 5m
Communications board	RPN003-AP	Flicker prevention and communications board for parallel operation	–
	RPN003-AM	Communications board for Modbus RTU	–

Note: Only one communications board of any type can be mounted.
Specify ZA□ in the unit option specifications to have the board mounted and shipped.

■ External connections

• External connections (single-phase)

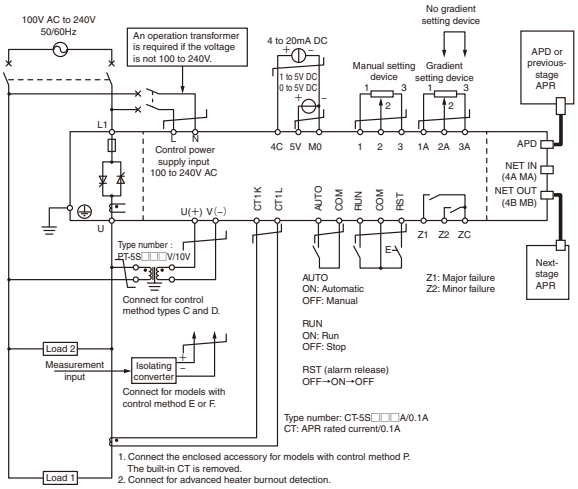

External connection (full connection with no function allocation changes)

• External connection (3-phase)

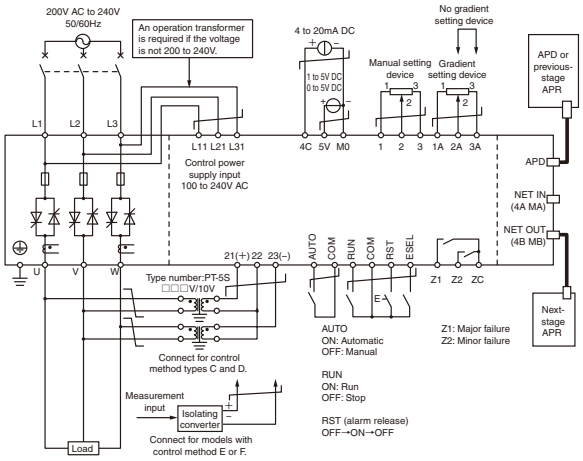

External connection (full connection with no function allocation changes)

• Control terminal functions using setting and display module (SW8: ON)

You can make function code settings using a setting and display module and delete external wiring or change functions using network communication.

Control terminals	Wiring	Remarks
RUN	Required	Operation is not performed when the RUN terminal is OFF. When the RUN terminal is ON, the unit will run or stop when the RUN/STOP key is pressed on the setting and display module. Operation using the RUN/STOP key on the setting and display module is recorded in non-volatile memory. If the last operation is RUN, the unit will run or stop according to the RUN terminal ON/OFF status. If the last operation is STOP, the unit will not run even if the RUN terminal is ON. The unit will run or stop only when the RUN terminal is turned ON or OFF if function code 1.b16 is set to OFF. The unit can be started or stopped using network communications if the RUN terminal is ON.
1, 2, 3 1A, 2A, 3A	Selectable	Settings can be made using a setting and display module for network communications, and so wiring is not required. The functions of the setting device (e.g., CLR and ST) for adjusting the APR unit can be allocated to an external setting device.
AUTO RST	Selectable	Operation can be performed using a setting and display module for network communications, and so wiring is not required. Alarms can also be reset using the RESET key on the setting and display module. Can be allocated HIGH setting/LOW setting switching input for two-position control.
4C, 5V, M0	Selectable	Control can be performed using network communications if control is made using PLC output.
Z1, Z2, ZC	Selectable	Alarm codes are displayed on the setting and display module. Network communications can be used to read alarm codes and check if there are major failures or minor failures.

• Main circuit and control power supply connection (single-phase)

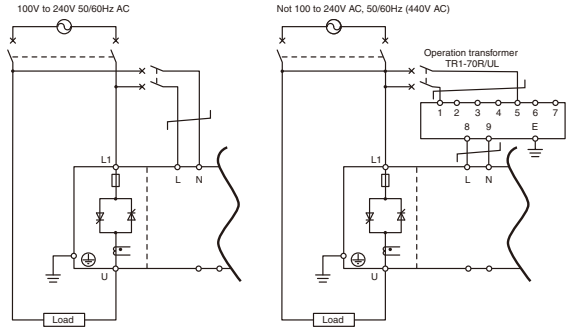

• Main circuit and control power supply connection (3-phase)

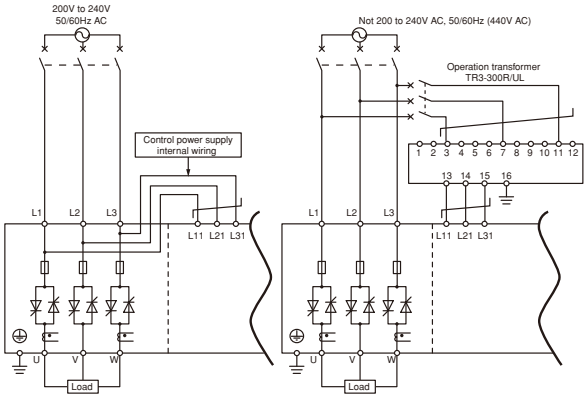

AC Power Regulators
APR-N series

■ Dimensions, mm

■ Single-phase

• RPNE □ 020, RPNE □ 045, RPNE □ 060

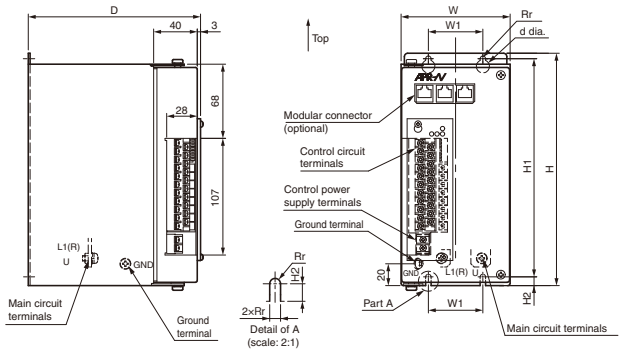

Type	W	H	D	W1	H1	H2	d	r	Mass (kg)
RPNE□020	100	213	158	50	200	8	12	2.5	2.6
RPNE□045	114	213	183	60	200	8	12	2.5	3.3
RPNE□060									

• RPNE □ 100, RPNE □ 150, RPNE □ 250, RPNE □ 350, RPNE □ 450, RPNE □ 600

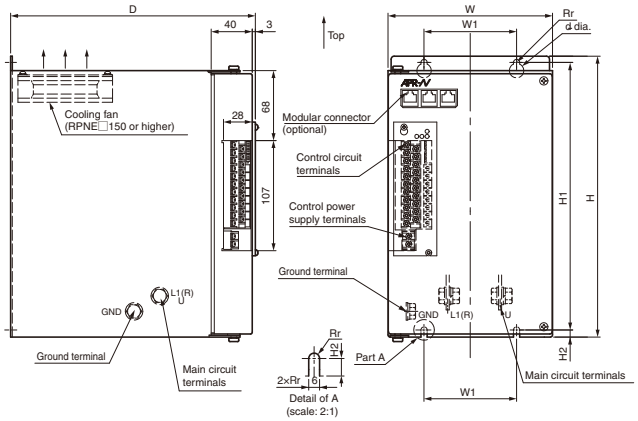

Type	W	H	D	W1	H1	H2	d	r	Mass (kg)
RPNE□100	144	224	238	90	210	8	14	3	5.3
RPNE□150	160	273	238	90	260	7	14	3	6.4
RPNE□250	178	335	238	120	320	8	15	3.5	10.0
RPNE□350	200	345	263	150	330	8	15	3.5	13.0
RPNE□450									
RPNE□600	207	360	288	157	345	8	15	3.5	14.8

■ 3-phase

• RPNW □ 020, RPNW □ 045, RPNW □ 060, RPNW □ 100, RPNW □ 150

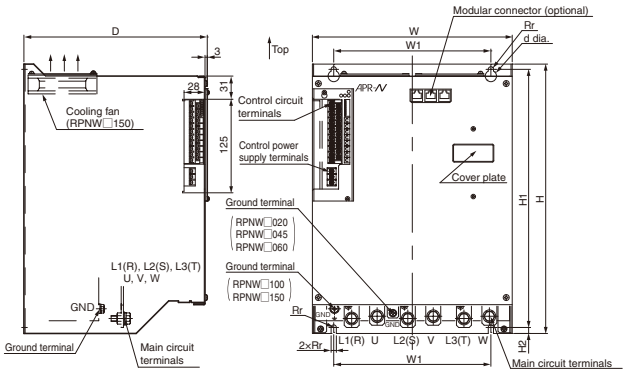

Type	W	H	D	W1	H1	H2	d	r	Mass (kg)
RPNW□020	230	273	160	200	260	6	14	3	5.0
RPNW2045	238	293	210	205	280	6	14	3	8.4
RPNW4045									9.1
RPNW2060	238	293	210	205	280	6	14	3	8.4
RPNW4060									9.1
RPNW□100	267	330	245	210	315	8	15	3.5	12.1
RPNW□150	267	360	245	210	345	8	15	3.5	13.0

• RPNW □ 250, RPNW □ 450, RPNW □ 600

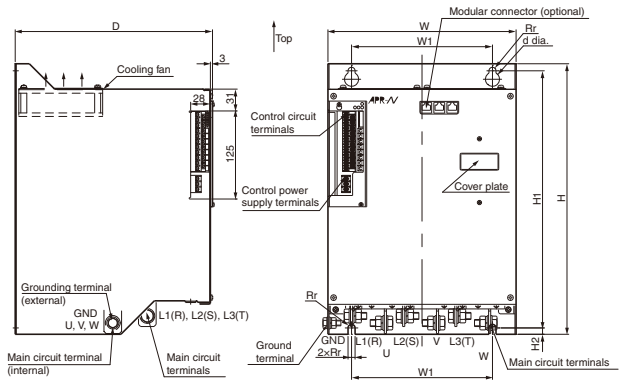

Type	W	H	D	W1	H1	H2	d	r	Mass (kg)
RPNW□250	267	384	280	200	365	9	20	5	16.9
RPNW□450	372	442	300	280	420	12	20	5	30.6
RPNW□600	372	528	310	280	505	11	24	6	37.0

• Enclosed items (if specified in order specifications)

Setting device Type number: RPN001	Used for setting methods, such as variable resistance setting, two-position control, and gradient control.

Rating: 1kΩJ 2.5W Type number: RA30YN20SB102J (manufacturer: Tokyo Cosmos)

Variable resistor

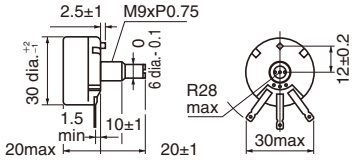

Mounting holes

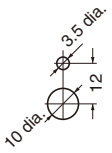

Nameplate

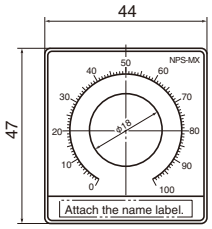

Knob

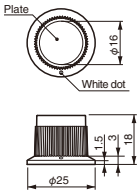

Name label sheet
(18 Japanese/English labels)

手動設定	MANUAL SET.
勾配設定	GRANDE SET.
CLR設定	CLR SET.
HIGH設定	HIGH SET.
LOW設定	LOW SET.
ソフトスタート時間設定	ST SET.
電源電圧補償設定	PVC SET.
ヒータ断線試験設定	HT SET.
ベースロード設定	BL SET.

Note: Control circuit terminal block allocation using the setting and display module is required except for manual setting and gradient setting.

Operation transformer (single-phase) Type number: TR1-70R/UL	Enclosed for input voltage code 4

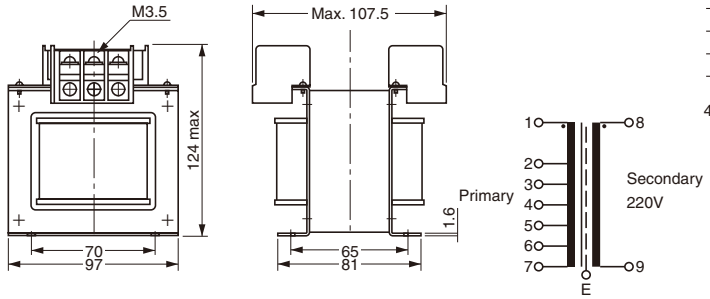

Output current	20 to 600A
Rating	Single-phase, 380, 400, 415, 440, 460, 480/220V, 70VA
Type	TR1-70R/UL

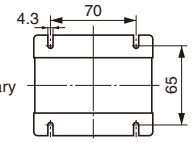

Mounting face

Primary voltage	Terminal number
380V	1-2
400V	1-3
415V	1-4
440V	1-5
460V (*1)	1-6
480V (*1)	1-7

Mass: 3.5kg

(*1) Do not use at 460V, 480V when the main body is standard voltage specification.

Operation transformer (3-phase) Type number: TR3-300R/UL	Enclosed for input voltage code 4

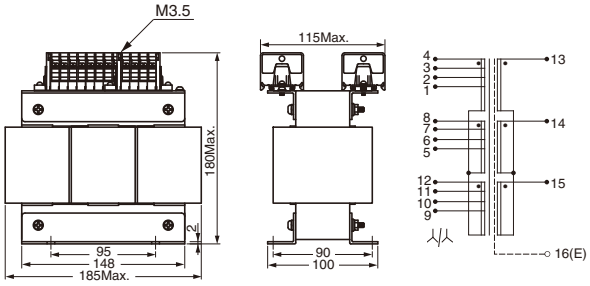

Output current	20 to 600A
Rating	3-phase, 380, 400, 440, 480/220V, 300VA
Type	TR3-300R/UL

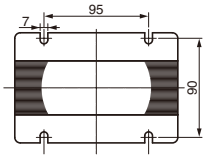

Primary voltage	Terminal number (R-S-T)
380V	1-5-9
400V	2-6-10
440V	3-7-11
480V (*1)	4-8-12

Mass: 8.5kg

(*1) Do not use at 460V, 480V when the main body is standard voltage specification.

AC Power Regulators
APR-N series

• Terminal block details

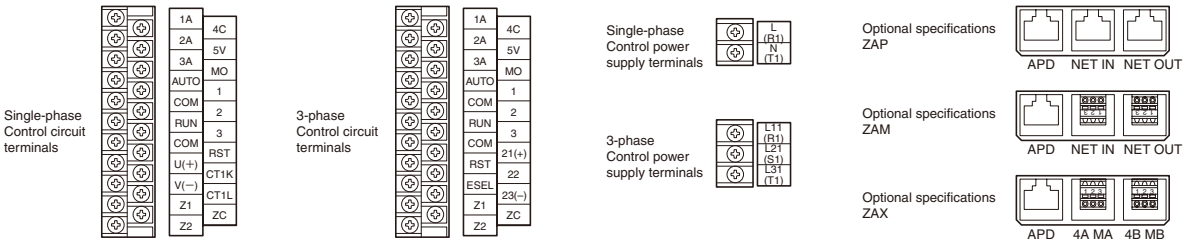

Category	Name	Symbol	Not used	Function description
Control power supply	Control power supply terminals	L(R1), N(T1)	–	Control circuit power supply, single-phase, 100 to 240V input
		L11(R1), L21(S1), L31(T1)		Control circuit power supply, 3-phase, 200 to 240V input
Control circuit	Manual setting input	1, 2, 3	Open	Manual setting input and HIGH setting input using connection of variable resistor
	Gradient setting input	1A, 2A, 3A	2A to 3A short-circuit	Gradient setting input and LOW setting input using connection of variable resistor
	Automatic setting input	4C, 5V, M0	Open	Voltage and current signal input of controller
	Automatic/manual switching input	AUTO, COM	–	Automatic setting input using external contact closed
				Manual setting input using external contacts open
	Run/stop input	RUN, COM	Short-circuit	RUN status using external contact closed and output OFF using external contact open
	Alarm reset	RST, COM	Open	Alarm release for closing of external contacts
	Alarm contact output	Z1, ZC		Internal contacts turn ON when alarm occurs for major failure
	Alarm contact output	Z2, ZC		Internal contacts turn ON when alarm occurs for minor failure
	External detection input	U(+), V(–)		Feedback detection input with connection of VT and DC converters
		U(+), V(–)		
	External CT input	CT1K, CT1L		CT connection using advanced heater burnout alarm
	External selection input	ESEL, COM		Switching of internal selection switch using external input (optional)
Parallel operation/ Modbus RTU	APD I/O	APD		Sending and receiving set values with connection of a setting and display module (APD)
				Receiving parallel operation signals from previous-stage APR in parallel operation
	Parallel operation I/O	NET IN NET OUT		Sending and receiving set values from the host in network communications
				Sending parallel operation signals to next-stage APR in parallel operation
		4A, MA 4B, MB		MX and MX2-series compatible input terminal
				MX and MX2-series compatible output terminal

Note: The function description for the control circuit applies when there are no changes in function allocations.
Note:*1 Do not use 460V or 480V if the voltage specifications of the unit are standard.

APD1 setting and display module

■ Features

The APR-N series enables a wide variety of operations and settings.

- · Fast selection and display switching using dial operation.
- · Display two elements at the same time with the data display and multi-indicator.
- · Perform unit diagnosis even with no data for the input signal check function.
- · Error detection history display functionality.
- · High-accuracy setting using digital display.
- · Customize functionality by changing function codes. (For example, allocate alarm outputs or allocate the terminal block for internal adjustment functionality.)
- · Function code copy functionality.
- · Compliance with EU RoHS Directive.
- · Compliance with UL and cUL standards.
- · Compliance with CE marking standards.

■ Specifications

Item	Specification
Type	**APD1**
Degree of protection	Panel surface: IP40, Back: (mounting surface): IP20
Operating location	Indoor
Ambient temperature	–5 to 50°C
Ambient humidity	30% to 90% RH (no condensation)
Environment	Location free from dust, corrosive gas (especially sulfidizing gas and ammonia gas), flammable gas, oil mist, water droplets, and direct sunlight. Location free from salt damage. Free from condensation due to sudden temperature changes.
Altitude	1000m max.
Ambient storage temperature	–20 to 60°C
Ambient storage humidity	30% to 90% RH (no condensation)
Installation method	Vertical installation (wall mounting)
Unit mounting tightening torque	
Mounting screws	M3 x 16
Tightening torque (±10%)	0.7N·m (7kgf·cm)
Mass	55g

■ Hardware specifications

Item	Specification
Connection cable for remote operation	Satisfies standards of U.S. ANSI, TIA, and EIA-568A Category 5. Straight cable (straight cable for 10Base-T and 100Base-TX)
Max. ommunications distance	20m (non-insulated)
External connection terminal	RJ-45 connector (modular jack connector)

Note: *1 If a setting and display module is used, a connection cable for remote operation (RPN002- □) and a communications board (RPN003-A □) are required.

*2 If a commercially available cable is used, do not use an STP (shielded) cable.

■ Dimensions, mm

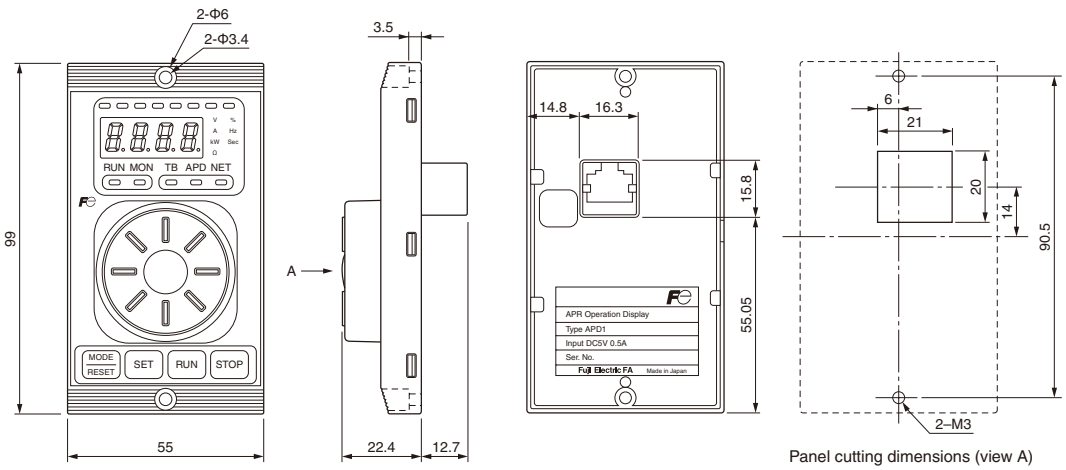

Panel cutting dimensions (view A)

■ Part names and functions of setting and display module

Multi-indicator

Display values are shown in eight segments on the LED monitor.
The indicators also display internal I/O monitors and communications monitors.

LED monitor

The monitor is a 7-segment LED display.
The following items are displayed according to the operation.

- Monitor mode
  Operation data (e.g., output voltage, output current, and load resistance values) is displayed.
  The alarm code is displayed if an alarm occurs.
- Setting mode
  Function codes and function code data are displayed.

Dial

The dial is used to select setting items and detection values displayed on the LED monitor and to change function code data.

MODE/RESET key

This key is used to switch between operation mode, monitor mode, and setting mode.

- Monitor mode
  Press this key to switch to setting mode.
- Setting mode
  Press this key to switch to monitor mode.

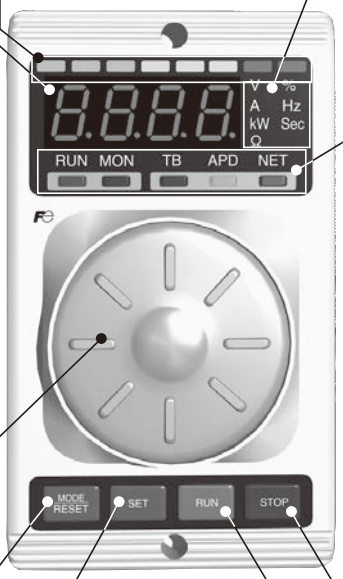

SET key

In setting mode, press this key to display function code data or enter data.

Unit display LEDs (seven)

LEDs display the unit for data displayed on the LED monitor.

- V ····· Voltage value display
- A ····· Current value display
- kW ····· Power value display
- Ω ····· Resistance value display
- % ····· Percentage display
- Hz ····· Frequency display
- Sec ····· Setting time display

Status display LEDs (five)

LEDs display the status.

- RUN-LED (operation display)
  This LED is lit when the APR is operation status.
- MON-LED (detection display)
  This LED is lit in monitor mode.
- TB-LED (terminal block display)
  This LED is lit when APR operation is performed according to a command from the terminal block.
- APD-LED (setting and display module display)
  This LED is lit when APR operation is performed according to the setting of the terminal block.
- NET-LED (network communications display)
  This LED is lit when APR operation is performed using a command from the host via network communications.

STOP key

This key is used to stop APR operation.

RUN key

This key is used to start APR operation.

■ Display and key operation

Display section and operation section \ Operation mode			Setting mode		Monitor mode	
			Operation stopped	Operating	Operation stopped	Operating
Display section		Function	Displays operation data outputs for fixed display of multi-indicator.		Displays in 8 segments for operation data, internal I/O, and communications monitors.	
		Display	ON/flashing			
		Function	Displays function codes and function code data. Displays alarm code at alarm.		Displays output voltage, output current, output power, load resistance value, and output %. Displays alarm code at alarm.	
		Display	ON			
		Function	Displays the status.			
		Display	• RUN-LED OFF	• RUN-LED ON	• RUN-LED OFF	• RUN-LED ON
			• MON-LED OFF		• MON-LED ON	
			• TB-LED ON when APR is selected at setting device.			
			• APD-LED ON when APD is selected at setting device.			
			• NET-LED ON when NET is selected at setting device.			
	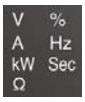	Function	Displays unit for data displayed on LED monitor.			
		Display	• V-LED Voltage display			
			• A-LED Current display			
			• kW-LED Power display			
			• Ω-LED Resistance value display			
			• %-LED Percentage display			
			• Hz-LED Frequency display			
			• Sec-LED Setting time display			
Operation section		Function	Increases and decreases function codes and function code data.		Switches display mode of operation data.	
		Function	Moves to monitor mode		Moves to setting mode	
					Resets error after removing cause of error.	
		Function	Displays function code data and entering data.		–	
		Function	Starting operation	–	Starting operation	–
		Function	–	Operation stopped	–	Operation stopped

AC Power Regulators
APR-D series

Single AC power regulators APR-D series

■ Description

The single-phase APR-D series of products are successors of αB and αC.
Whereas their functions and performance have been largely improved due to incorporation of a CPU, space saving, less wiring, and inexpensive cost have been achieved.

■ Features

- Also applicable to control of inductive load and primary control of transformers and rectifiers, through continuous comb tooth pulse control.
  Optimum for light modulation of LED illumination (for phase control).
  Note: When the rated voltage is applied, the load shall flow the minimum load current or more.
- Being able to switch the waveform control method among phase control, cycle control, and phase angle proportion control.

Phase control (0 to 100%)

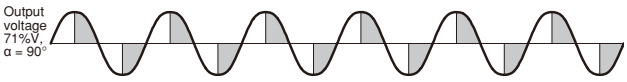

Cycle control (Intermittent control)

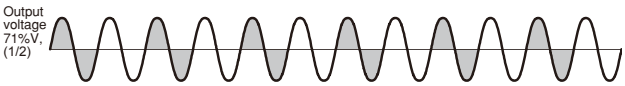

- The standard configuration does not include a control input connector. (Less wiring, low cost)
  For auto setting or manual setting only, it is possible to adjust the device by changing the function of the control input terminal block.

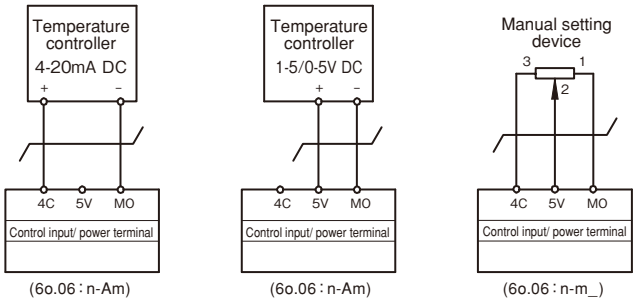

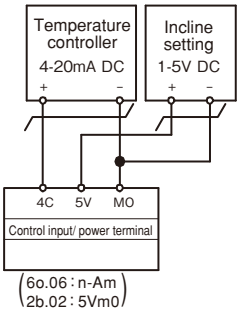

Note: The factory defaults are n-Am for 6o.06 and Aod for 2b.02.
The parentheses show function codes and terminal functions.

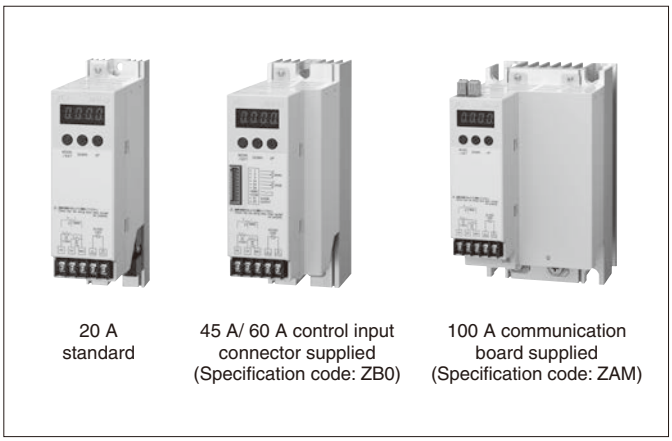

- Space saving is possible due to a class-minimal dense array (minimum interval in width: 2 mm)
- Base load setting, digital settings including incline setting, and monitor functions are available as part of the standard configuration.

Operation example

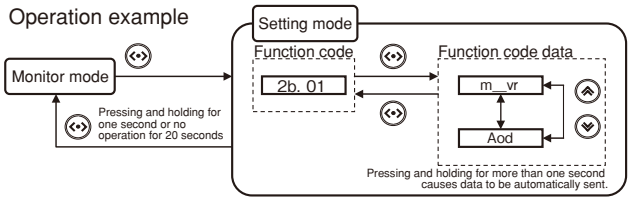

- Allows soft start time, soft up time, and soft down time to be discretely set in the range of 0 seconds to100.0 seconds.
- Performs auto identification of 100 to 240 V AC and 50/60 Hz with respect to control power
- As a control method, current limiting control and constant-current feedback control are available.
  You can also detect heater disconnection (cycle control: load opening).
  Note: It is possible to detect disconnection of one to three lines in an alloy heater where there are small changes in resistance depending on the temperature.
- Allows communication control as an optional function.
  Option type of the main unit:
  ZAP: Up to 50 units can be operated in parallel.
  For cycle control, a flicker prevention function is available.
  ZAM: Various settings and monitors are possible by means of RS485 (Modbus RTU).
- All models satisfy CE marking.

- Revised Chinese version RoHS compliant

All models of single-phase APR-D series are standard compliant.

■ Type number nomenclature

RPD E 2 0 6 0 — T 1 — Z B 1 (Note 1)

Product category

Product	Code
APR-D series	RPD

Number of phases

Number of phases	Code
Single phase	E

Input voltage

Input voltage	Code
100-240V	2

Rated current

Rated current	Code
20A	020
45A	045
60A	060
100A	100

Specifications

Specifications	Code
Standard	Blank
Option of the main unit	Z** (Note 3)

Setting device (Note 2)

Setting device	Code
Non	Blank
Setting device: 1 set	1
Setting device: 2 sets	2
Setting device: 3 sets	3

Control method

Control method	Code
No feedback function	T
AC CLR	A
AC ACR plus AC CLR	B

CLR: Current restriction control
ACR: Constant-current control

Note 1: For the order codes which are blank, put no space, immediately followed by a hyphen.
Note 2: One set of setting devices is composed of a variable resistor, nameplate, control knob, and attachment sheet. The format of a separate order is "RPD001". This is not shown as the type of the main unit.
Note 3: For options of the main unit, it is possible to specify multiple specification items like RPDE2020-T1-ZAMB3.

Option specification names	Description	Type
Communication board (For parallel run)	Mounting a communication board for parallel run, equipped with a flicker prevention function (Note 4)	RPDE2□□□-□■-ZAP
Communication board (For network connections)	Mounting a communication board for Modbus RTU	RPDE2□□□-□■-ZAM
Control input connector	A connector is supplied to support functions including manual, incline setting input (external attachment) and alarm output. (Note 5)	RPDE2□□□-□■-ZB1
Main-circuit power On soft start	Soft start through main-circuit power On is possible. (Pure metal load can be handled.) (Note 6)	RPDE2□□□-□■-Z45

Note 4: The parallel run function provided by this communication board is not compatible with models other than the APR-D series.
Note 5: A connector set (socket: built-in/ plug: supplied) for a European terminal block is supplied to support manual, incline setting input (external variable resistor), auto/manual switching input, and alarm input. If the plug is not needed, specify ZB0.
Note 6: When the APR is to be connected with the secondary side of a transformer, this option type is not applicable.
Note 7: Note that options of the main unit are attached before shipment.

■ Types and specifications

Number of phases	Input voltage	Output current (A)	Type
Single phase	Common for 100 to 240 V	20	**RPDE2020-T**
			RPDE2020-A
		45	**RPDE2045-T**
			RPDE2045-A
		60	**RPDE2060-T**
			RPDE2060-A
		100	**RPDE2100-T**
			RPDE2100-A

■ Important notes in selecting product

- **Allowed load current/ ambient temperature characteristics**
  The standard rated current value is the one at an ambient temperature of 40°C. When it exceeds 40°C, reduce the load current as below:

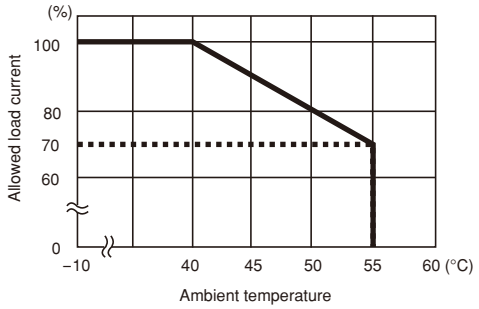

- **Options of the main unit**
  After delivery, addition and alternation are not allowed for the type (product code). Please remember this when making an order.
- **Quick action fuse**
  The main circuit does not contain a fuse. Use a quick action fuse depending on the capacity.
- **Selection of rated current**
  Considering that a large inrush current flows in an incandescent lamp or pure metal heater (a current that is several to ten times larger than a steady-state current for approx. 1/20 seconds to several seconds), choose the rated current very carefully.
- **Primary control of a transformer (primary control of a rectifier)**
  (1) If the transformer may be subject to no load, resistor attachment is needed to cause 0.5 A to flow in the primary wiring in parallel.
  (2) So that bias magnetism is well prevented, extra magnetic flux density shall be considered. (1.0 to 1.2 T)
  (3) Even if the line voltage becomes below -15%, output of APR-D is kept. Recovery of the line voltage may result in overcurrent caused by bias magnetism phenomenon.
- **Important notes for power cycle life expectancy**
  If run and stop are repeated at short-period cycles (for example, 30-minute run and 30-minute stop), a large difference in temperature occurs in the thyristor element, significantly shorting its life expectancy through thermal fatigue. If such operations need to be performed, try to minimize the temperature fluctuation. Specifically, reduce the use rate of rated current to less than 80%. Or, choose an APR whose rated current is one level higher, so that the use rate of rated current is less than 80%.

AC Power Regulators
APR-D series

■ Specifications

Item			Specifications			
Type			**RPDE2020-□**	**RPDE2045-□**	**RPDE2060-□**	**RPDE2100-□**
Input	Main circuit/ control circuit	Rated input voltage and frequency	Single phase 100/240 V AC 50 Hz/ 60 Hz (Auto identification)			
		Input voltage range	Rated input voltage ±10% (Performance guarantee) (Note 1) Rated input voltage ±15% (Operation guarantee)			
		Input frequency range	50Hz/60Hz±2.5Hz			
	Control circuit	Input capacity	15 VA or less			
Output	Rated current (Ambient temperature: 40°C) [A]		20	45	60	100
	Cooling system		Self-cooled			
	Applied load		Resistive load, inductive load, primary control of a transformer, primary control of a rectifier (For cycle control, resistive load (alloy) only)			
	Minimum load current		0.5 A (With 100% output of the rated input voltage)			
	Generation loss (with rated current) [W]		30	55	70	110
Control	Waveform control method		Single-phase thyristor normal/reverse parallel connection Phase control/ cycle control (intermittent)/ phase angle proportion control			
	Output voltage adjustment range		0 to 100% (RMS value) of the main-circuit line voltage (thyristor voltage drop portion excluded)			
	Input/output characteristics		Linear characteristic of RMS value/ linearity: ±3%FS or less (phase control) Linearity: ±5%FS or less (cycle control) (With resistive load/ setting signal 10% to 90%)			
	Setting signal	Auto setting	Current signal: 4 to 20 mA DC (Zin = 100 Ω) Voltage signal: 0 to 5 V DC, 1 to 5 V DC (Zin = 11 kΩ) SSC signal: 0 V/ 12 V DC (Zin = 11 kΩ)			
		Manual setting	External variable resistor: 1 kΩ (B characteristics 1/2 W or more)			
		Digital setting	Front key input (Possible direct drive)			
		High/low setting (2-position control)	Possible combinations by means of digital setting and an external variable resistor External contact switching by means of digital setting or control input connector (option of the main unit), with respect to contact switching signals			
	Incline setting	Setting range	0 to 100% of output voltage			
		Setting equipment	Voltage signal setting through digital setting (1 to 5 V DC only), external variable resistor (1 kΩ), or control circuit terminal (5 V, M0) Possible countergradient characteristics through combinations with base load setting			
	Base load setting	Setting range	0 to 100% of output voltage			
		Setting equipment	Digital setting			
	Soft start time Soft up time Soft down time	Setting range	Control method T type, A type: 0 to 100 seconds Control method B type: 0.5 to 100 seconds (Note 2)			
		Setting equipment	Digital setting Discrete setting is possible for each time.			
	Feedback control method (Phase control only)		AC CLR (Control method A type) AC ACR plus AC CLR (Control method B type) (Prioritized run of AC CLR)			
	Manual/auto Switching signal		Non-voltage contact			
Communi-cation (Note 4)	Parallel run Master/slave		Maximum number of connectable units: 50 Main unit's option type "ZAP" (Not compatible with the APR-N series)			
	Network communication		RS-485 conformed Two-wire system Half duplex start-stop synchronization Protocol: Modbus RTU conformed Maximum number of connectable units: 31 Main unit's option type "ZAM"			
Fault detection/ protection	CPU memory error		CPU memory error detection at the time of initiation			
	Power failure		Detection of control power frequency outside the range from 45 to 65 Hz			
	Auto setting input, not connected		Detection of non-connection of current signal (4 to 20 mA DC) and voltage signal (1 to 5 V DC) (Only with auto setting)			
	Manual setting input, not connected		Detection of non-connection of a manual setting device (external variable resistor) (Only with manual setting)			
	Incline setting input, not connected		Detection of non-connection of an incline setting device (external variable resistor or 1 to 5 V DC)			
	Reverse phase detection		Detection when the main-circuit power phase and control power phase are reverse (Main unit's option type "Z45" only)			
	Data writing/reading error		Detection of read/write errors from/to EEPROM			
	Thyristor failure		Detection of thyristor shorting through built-in CT (Control method A type, B type)			
	Communication failure		Detection of data transmission failure (main unit's option type "ZAP" or "ZAM") at the time of parallel run or network communications			
	Current restriction detection		Detection of load current exceeding the CLR setting value; decrease of the current to the CLR setting value (or lower) through phase angle change (Control method A type, B type)			
	Heater disconnection		Detection of APR output current values lower than the disconnection judgment value (Control method A type, B type) (Note 3)			
	Alarm output		Open collector 24 V DC/ 0.1 A 1 circuit			
Opera-tional environ-ment	Ambient temperature		-10 to +55°C (If the temperature is over +40°C but within +55°C, the load current is to be reduced to the rated current value.)			
	Storage temperature		-20 to +60°C			
	Ambient humidity		+5 to +95%Rh (There must be no condensation.)			
	Others		There must be no factor, action, and vibration which induce corrosive gas, fine particles, and insulation deterioration. Indoor, 1000 m or less altitude			
Insula-tion	Dielectric strength (Between the main circuit and the earth)		2000 V AC, 1 minute			
	Insulation resistance (with the earth)		10 MΩ or more with 500 V DC megger			

Note 1: Performance guarantee designates satisfying specifications and assuring proper run of the product. Operation guarantee designates assurance of damage-free parts and proper run of the product.
Note 2: Soft start and soft up/down time regarding control method B type are invalid even if set to a time which is shorter than the response speed in terms of PI control.
This is because PI control is prioritized over soft start and soft up/down time.
Note 3: For cycle control, load open detection is performed.
Note 4: Only any one type of communication board can be mounted before shipment.

■ Wiring diagram

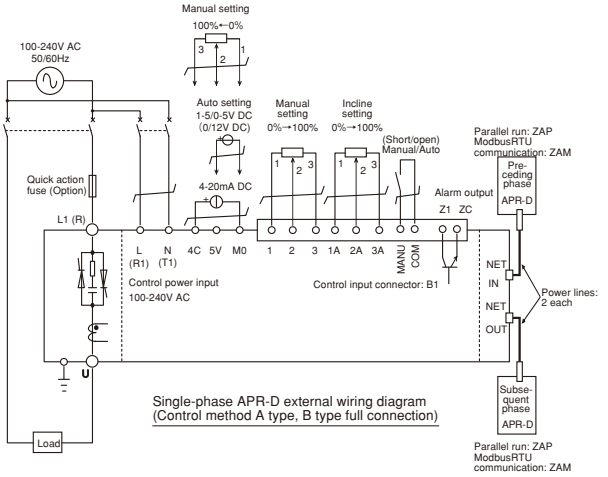

Single-phase APR-D external wiring diagram
(Control method A type, B type full connection)

• Wiring of the main-circuit terminals and control power terminals

(1) When the main-circuit voltage is 100 to 240 V AC

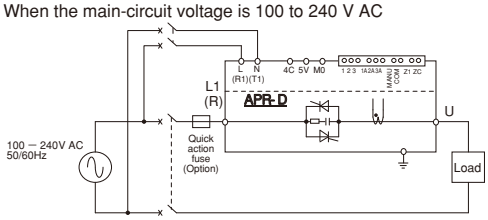

(2) When the main-circuit voltage is not 100 to 240 V AC

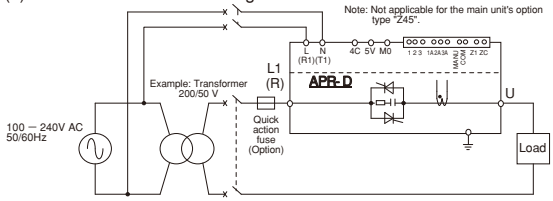

• Positions and functions of connection terminals

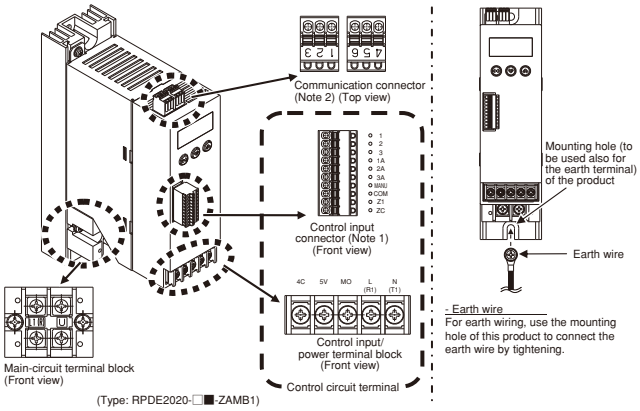

(Type: RPDE2020-□■-ZAMB1)

Note 1: To be supplied when the main unit's option "ZB1" is specified.
Note 2: To be supplied when the main unit's option "ZAM" is specified.

• Screw size and tightening torque

Terminal		Screw size	Tightening torque [N·m]±10%
Main-circuit terminal block	L1 (R) , U	20A M4	1.8 (18kgf·cm)
		45A M5	2.7 (27kgf·cm)
		60A M5	
		100A M8	12.0 (120kgf·cm)
Control input / power terminal block	L (R1) , N (T1) , 4C, 5V, M0	M3	0.5 (5kgf·cm)
Control input connector	1 to ZC	–	–
Communication connector	NET IN, NET OUT		
Main-unit mounting screw (To be used also for the earth terminal)		20-60A M5	3.5 (35kgf·cm)
		100A M6	5.8 (58kgf·cm)

• Terminal function

Terminal type		Symbol	Name	Function description
Terminal position	Pin			
Main-circuit terminal block	–	L1 (R)	Main-circuit terminal	L1 (R): Main-circuit power input U: APR output (Connection to load)
	–	U		
	–	–	Earth terminal	Main unit's earth terminal (Shared mounting hole)
Control circuit terminal — Control input/ power terminal block	–	4C (3)	Auto setting input (Function code 6o.06 = n-Am (factory default))	4C - M0: 4 to 20 mA DC input (Zin = 100 Ω) 5 V - M0: 1 to 5 V DC 0 to 5 V (SSC signal: 0/12 V) (Zin = 11 kΩ) It is possible to allocate 5V - M0 to1 to 5 V DC incline setting input.
	–	5V (2)		
	–	M0 (1)	Manual setting input (Function code 6o.06 = n-m_)	Connecting a variable resistor makes it possible to use as manual setting input. * When using this terminal as manual setting input, detection of manual setting non-connection is not performed.
	–	L (R1)	Control power terminal	Control power input. Input the same phase as that of the main circuit.
	–	N (T1)		
Control input connector (option)	1	1	Manual setting input	Connecting a variable resistor makes it possible to use as manual setting input.
	2	2		
	3	3		
	4	1A	Incline setting input	Connecting a variable resistor makes it possible to use as incline setting input.
	5	2A		
	6	3A		
	7	MANU	Auto/manual switching input	External contact Open: Auto setting Close: Manual setting
	8	COM		
	9	Z1	Alarm output terminal	When an alarm is generated, the internal open collector is On. Operation selection is possible by changing the function code setting.
	10	ZC		
Communi-cation connector (Option) — Network	1, 2	NET IN	RS-485 input/output	When in network communications (option type: ZAM), various kinds of data are sent to and received from a host using the ModbusRTU protocol.
	4, 5	NET OUT		
Parallel run	1, 2	NET IN	Parallel run input	When in parallel run (option type: ZAP), parallel run signals are received from the preceding APR.
	4, 5	NET OUT	Parallel run output	When in parallel run (option type: ZAP), parallel run signals are sent to the subsequent-phase APR.

■ Other options

• APR- αB, replacement adapter for αC (RPD002-E □□)

Type	Description
RPD002-E02	For RPDE2020-□
RPD002-E06	For RPDE2045-□, RPDE2060-□
RPD002-E10	For RPDE2100-□

Note: Attach the adapter to the mounting holes (for APR- αB and αC) on the board, and then attach the APR-D to the adapter. For RPCE2020-□, RPD002-E06 shall be applied.

• Control input connector (Plug side), DIN rail-mounting adapter

Type	Description
RPD003	Control input connector (plug for ZB0)
RPD004-E02	DIN rail-mounting adapter for RPDE2020-□

• Quick action fuse

Rated current (APR type)	Quick action fuse (Rated current)	Quick action fuse holder	Base and cap
20A (RPDE2020)	CR2LS-30 (30 A) or BLC045-1 (45A)	CM-1A CM-1A (For CR2LS; tripolar product)	AFa60+Pa60 (for BLC)
45A (RPDE2045)	CR2LS-75 (75A) or BLC075-1 (75A)		AFa100+Pa100 (for BLC)
60A (RPDE2060)	CR2LS-100 (100A) or BLC090-1 (90A)		
100A (RPDE2100)	CR2L-150 (150A)	CM-2A (Tripolar product)	–

■ **The standard configuration of the APR-D series contains display/operation sections for various monitors and settings.**

• Names and functions of the individual parts

Name	Function	Name	Function
Drive monitor	Data display section 4th digit DP Run output Presence (lighting up)/ absence (going off)	UP key DOWN key	Use, for example, to select run information shown on the data display section and to change the function code data. * Press and hold for one second or longer to perform auto switch of the data display.
Data display	4-digit 7-segment LED monitor The information below is shown depending on operation modes. • When in monitor mode Run information (Output instruction value, output current, input current, etc.) When an alarm is generated, an alarm code is shown. The 4th digit shows items regarding various pieces of run information. • When in setting mode Information such as a function code and function code data is shown.	MODE/ SET key	Use to switch the operation mode. • When in monitor mode Press and release to switch to the setting mode. • When selecting a function code in the setting mode Press and release to switch to function code data display. Press and hold for 1 second or longer to switch to the monitor mode. • When setting function code data in the setting mode Press and release to confirm data. Press and hold for 1 second or longer to cancel the setting and return to the monitor mode.
Alarm indica-tor	Data display section 1st digit DP Alarm Presence (blinking)/ absence (going off)		

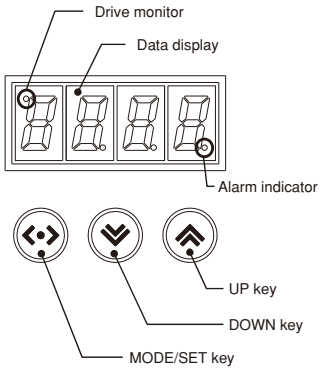

• Monitor mode

Operating the UP and DOWN keys causes the monitor items below to be shown.
(The alarm code is shown only when a failure occurs.)

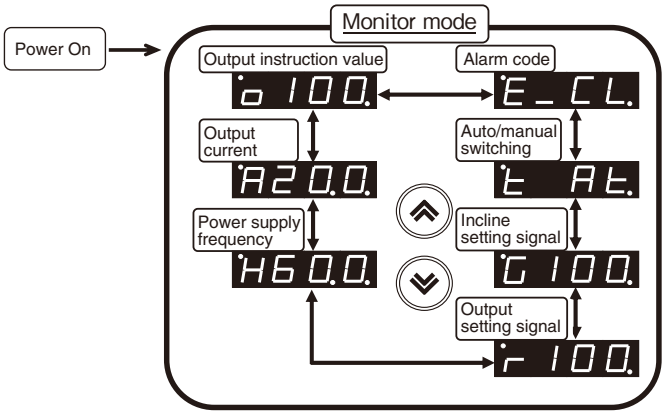

	Monitor item	Function item display	Display	Unit	Display description	Monitor accuracy (Note) T	A/B
1	Output instruc-tion value	o	100	%	Output instruction through APR internal calculation	○	
2	Output current	A	20	A	AC output current detection value	—	○
3	Power supply frequency	H	60.0	Hz	Power supply frequency detection value	○	
4	Output setting signal	r	100	%	Setting signal detection value	○	
5	Incline setting signal	G	100	%	Incline setting signal detection value	○	
6	Auto/manual switching	t	At/ mn	–	Auto/manual switching terminal status indication	—	
7	Alarm code	E	_SM	–	Indication at the time of alarm generation	—	

Note: Monitor accuracy: ○=5%

• Setting mode

It is possible to set and confirm the data below, for each item:

Category	Display	Setting item	Description of the main functions
Data setting	1b._ _	Basic function 1 b code (1b.01 to 1b.06)	Setting to be used for basic APR operations Mainly substitute of external volume
	2b._ _	Basic function 2 b code (2b.01 to 2b.07)	Setting to be used for basic APR operations Mainly function selection
	3F._ _	Feedback function F code (3F.01 to 3F.08)	Setting relating to feedback CLR setting, heater disconnection function
	4n._ _	Network function n code (4n.01 to 4n.08)	Communication relating setting
	5A._ _	Alarm function A code (5A.01 to 5A.09)	Alarm output (control input connector) setting
Setting option	6o._ _	Setting option function o code (6o.01 to 6o.07)	Utility function setting (For example, display of function codes changed from factory defaults and restriction of operations of the setting display section)
Initial setting	0i._ _	Initial setting function i code (0i.01 to 0i.05)	Type setting, ROM version confirmation

• Example of setting groups

Function code	Name	Function code data (Settable range)	Step size	Unit	Factory default
1b.01	Manual digital setting	0 to 100.0(%)	0.1	%	0
1b.02	Incline digital setting	0 to 200.0(%)	0.1	%	100.0
1b.03	Base load setting	0 to 100.0(%)	0.1	%	0
1b.04	Soft start time setting	T type, A type: 0 to 100.0 (seconds) B type: 0.5 to 100.0 (seconds)	0.1	seconds	0.5
1b.05	Soft up time setting		0.1	seconds	0.5
1b.06	Soft down time setting		0.1	seconds	0.5

• Incline setting/ base load setting

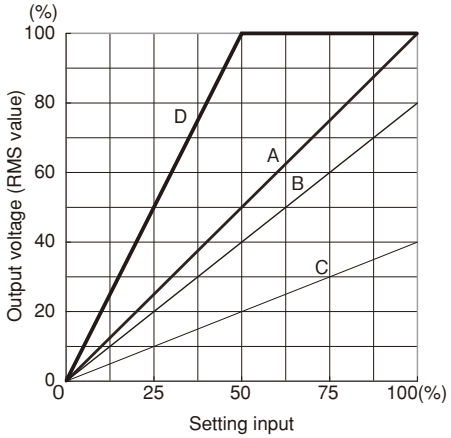

Characteristics	Output adjustment range (%)	Base load setting (%)	Incline setting (%)
A	0 to 100	0	100
B	0 to 80	0	80
C	0 to 40	0	40
D	0 to 100	0	200

Incline setting: Set an output value to be presented when setting input is 100%. (Setting range: 0 to 200%)
Note: The upper limit output value is 100% of input voltage.

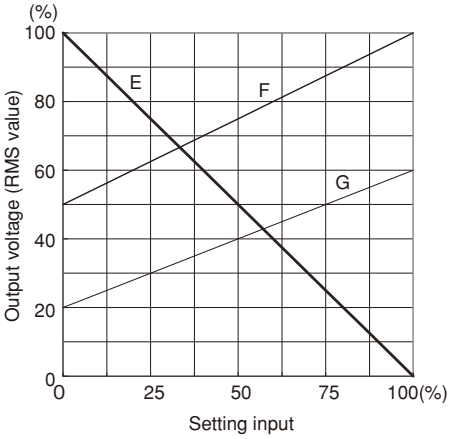

Characteristics	Output adjustment range (%)	Base load setting (%)	Incline setting (%)
E	100 to 0	100	0
F	50 to 100	50	100
G	20 to 60	20	60

Base load: Set an output value to be presented when setting input is 0%. (Setting range: 0 to 100%)
Actual output represents characteristics resulted from the connection between a base load setting value and incline setting value using a straight line.

• Heater disconnection detection (Control method A type, B type)

Heater disconnection is recognized when the load current becomes lower than the current value which has been set with the heater disconnection judgment level.

- Applied heater: Alloy heater (Load which flows 40 to 100% of the rated current when the output voltage is 100%)
- Number of parallel lines: 1 to 3 (The material and capacity must be identical.)
- For phase control/ phase angle proportion control
  When setting less than 5%: Invalid disconnection judgment
  When setting 5% or higher: Disconnection is detected when the output current is 5 (approx.) to 100% of the rated current.
- Cycle control
  When setting 5% or higher: Load open is detected when the output current is less than 5% (approx.) of the rated current.
- Judgment range: 30 to 100% of the output instruction value
- Judgment accuracy: ±5%FS or less

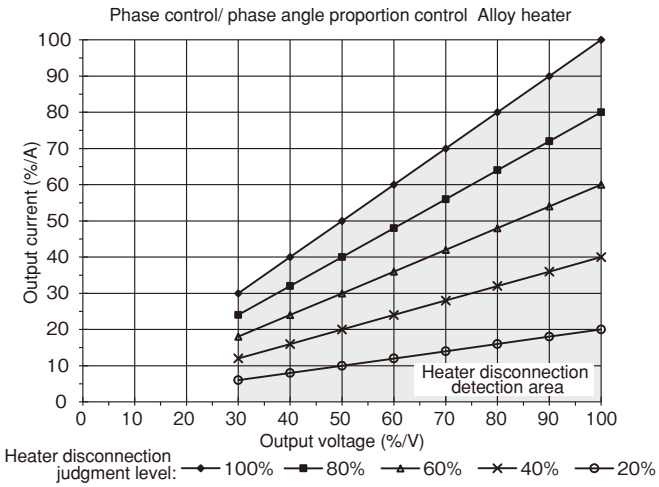

Heater disconnection detection characteristics through output voltage

■ Dimensions, mm

RPDE2020 type (20 A)

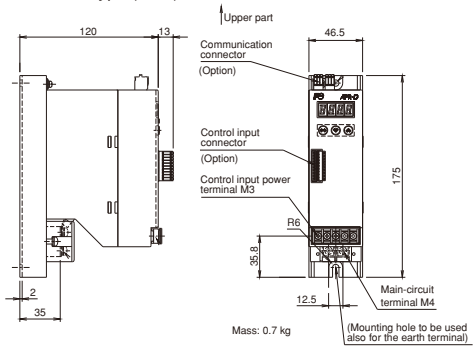

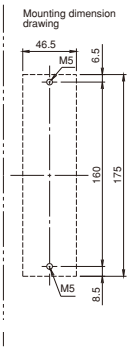

RPDE2045, 2060 type (45 A, 60 A)

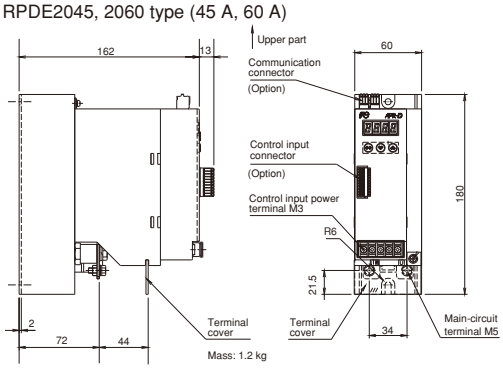

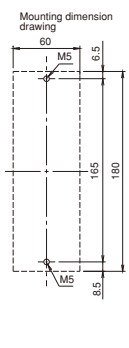

RPDE2100 type (100 A)

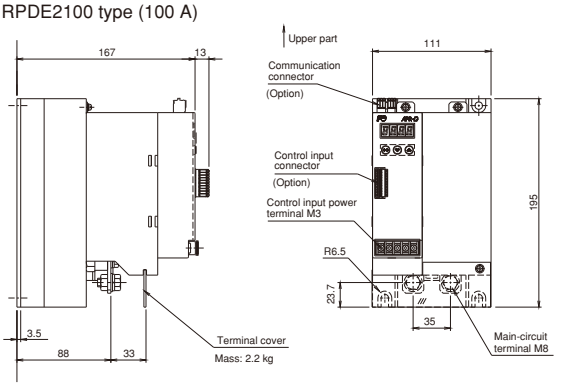

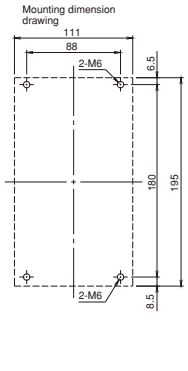

• Supplied item (If specified in ordering information)

Setting device Type: RPD001	To be used for setting methods including variable resistor setting, 2-position control, and incline setting.

Rating: 1 kΩJ, 2.5 W Type: RA30Y20SB102J (Manufacturer: TOKYO COSMOS)

Variable resistor

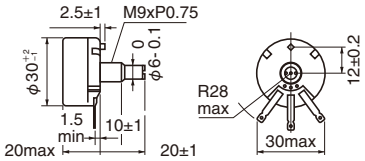

Mounting hole processing drawing

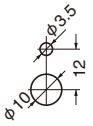

Nameplate

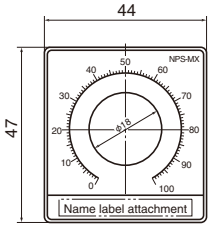

Knob

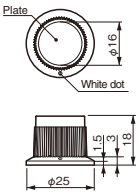

Name label sheet
(Japanese/English, 8 kinds)

手動設定	MANUAL SET.
勾配設定	GRADE SET.
HIGH設定	HIGH SET.
LOW設定	LOW SET.

■ Important notes for installation

(1) Install in a dust-free place with high cooling effect. So that heat radiation from APRs is possible, mount to a vertical metal object, confirm the vertical orientation shown in Figure 1, and ensure sufficient vertical and horizontal clearance among the units. If placing APRs closely one another, ensure sufficient clearance beyond the dimensions indicated in Figure 1 to reduce heat interference among the APRs.

(2) Heat generation of an APR raises the temperature inside the panel. Considering expected temperature rise, implement measures such as cooling and ventilation. (The upper limit of temperature inside the panel is 55°C.) The reference ambient temperature for the rated current is 40°C.
When it exceeds 40°C, reduce the load current.

(3) Ensure a clearance with nearby objects, considering the work space of wiring tools at the individual terminals.

(4) The top of an APR has a partial opening. Be careful not to drop any object into the opening.

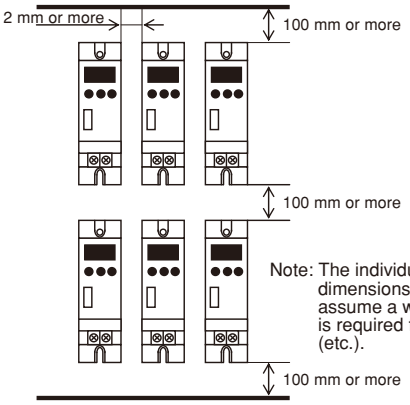

Figure 1 Installation interval

AC Power Regulators
APR-D series

3-phase AC power regulators APR-D series

■ Description

The three-phase APR-D series products are successors of APR-L.
Whereas their functions and performance have been largely improved due to incorporation of a CPU, space saving, less wiring, and inexpensive cost have been achieved.

■ Features

- Adopting the thyristor normal/reverse parallel method (6 arms).
- The output range is 0 to 100% of the main-circuit line voltage. Where the voltage drop portion due to thyristor-specific resistance is excluded.
- You can also switch the waveform control method among phase control, cycle control, and phase angle proportion control.

Phase control method (0 to 100%)

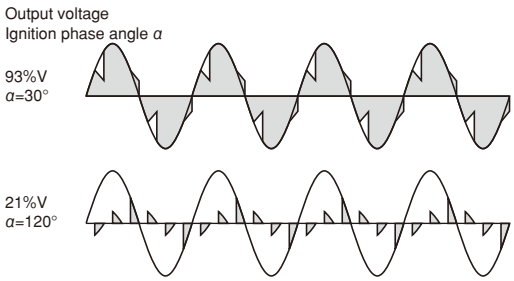

Cycle control method (Continuous)

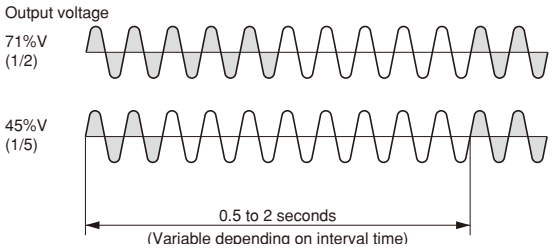

- The main-circuit terminal block has a cover attached.
- The mounting pitch is the same as for APR-L.
  Where 400 V, 45/60 A products are excluded.
- Output regarding individual settings represents linear characteristics of RMS values.

100 A communication board, supplied | 45/60 A standard | 20 A standard

- Base load setting, digital settings including inclination setting, and monitor functions are available as part of the standard configuration.

Operation example

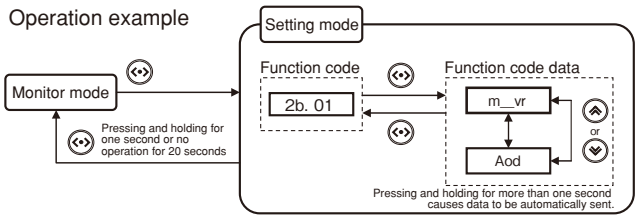

- Allows soft start time, soft up time, and soft down time to be discretely set in the range of 0 seconds to 100.0 seconds.
- When power to the main-circuit is turned On, soft start is always activated.
- The line voltage ranges are 200 to 240 V AC and 380 to 480 V AC.
  Note: An operational transformer is supplied with 380-440 V AC products.
  An operational transformer for 380-480 V AC products is an option.
- Allows communication control as an optional function.
  Option type of the main unit:
  ZAP: Up to 50 units can be operated in parallel.
  For cycle control, a flicker prevention function is available.
  ZAM: Various settings and monitors are possible by means of RS485 (Modbus RTU).
- All models of the APR units satisfy the CE marking.
  As for 400 V products, the operational transformer needs to be modified so that the CE marking is satisfied.

- Revised Chinese version RoHS compliant
All models of single-phase APR-D series are standard compliant.

■ Type number nomenclature

RPD W 2 0 6 0 — T 1 — Z A P — 0 2 (Note 1)

Product category

Product	Code
APR-D series	RPD

Number of phases

Number of phases	Code
Three phases	W

Input voltage

Input voltage	Code
200 to 240V	2
380 to 440V, 380 to 480V	4 (Note 5)

The main unit supports 380-480 V.

Rated current

Rated current	Code
20A	020
45A	045
60A	060
100A	100

Others

Others	Code
No specification	Blank
No operational transformer	01
Test report (both Japanese and English), attached	02
No operational transformer plus test report, attached	03

The test report is generated in Fuji Electric's standard format. When specified by a customer, special specifications (Z) are produced.
This is not shown as the type of the main unit.

Specifications

Specifications	Code
Standard	Blank
Option of the main unit	Z** (Note 3)

Setting device (Note 2)

Setting device	Code
No	Blank
Setting device: 1 set	1
Setting device: 2 sets	2
Setting device: 3 sets	3

Control method

Control method	Code
No feedback function	T

Note 1: For the order codes which are blank, put no space, immediately followed by a hyphen.
Note 2: One set of setting device is composed of a variable resistor, nameplate, control knob, and attachment sheet.
The format of a separate order is "RPD001". This is not shown as the type of the main unit.
Note 3: Option of the main unit (Example)

Option specification names	Description	Type
Communication board (For parallel run)	Mounting a communication board for parallel run, equipped with a flicker prevention function (Note 4)	RPDW□□□□—T■—ZAP
Communication board (For network connections)	Mounting a communication board for Modbus RTU	RPDW□□□□—T■—ZAM

Note 4: The parallel run function provided by this communication board is not compatible with models other than the APR-D series. Cycle control with a single-phase product is not possible.
Note 5: For input voltage code "4", an operational transformer (ML3C2954) is supplied as part of the standard configuration.
For products which support 480 V or CE marking, add "-01" to the main unit's type and separately order "TR3-300R/UL".
Order format example: RPDW4020-T1-01

Name	Transformer type	Rating (Primary voltage/ secondary voltage, capacity)
Operational transformer (Standard)	ML3C2954	380, 400, 440V/210V 20VA
Operational transformer (480 V supported)	TR3-300R/UL	380, 400, 440, 480V/220V 300VA

D2

■ Types and specifications

Number of phases	Input voltage	Output current (A)	Type
Three phases	200 to 240V	20	**RPDW2020-T**
		45	**RPDW2045-T**
		60	**RPDW2060-T**
		100	**RPDW2100-T**
	380 to 440V	20	**RPDW4020-T**
		45	**RPDW4045-T**
		60	**RPDW4060-T**
		100	**RPDW4100-T**

■ Important notes for selections

• Allowed load current/ ambient temperature characteristics

The standard rated current value is the one at an ambient temperature of 40°C. When it exceeds 40°C, reduce the load current as below:

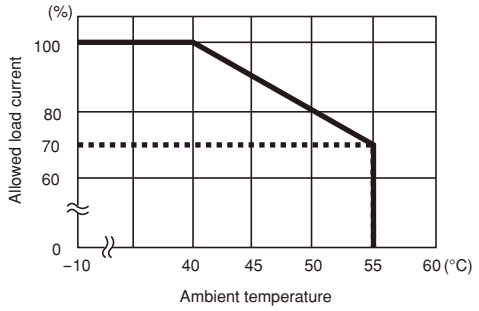

• Options of the main unit

After delivery, addition and alternation are not allowed for the type (product code). Please remember this when making an order.

• Quick action fuse

The main circuit does not contain a fuse. Use a quick action fuse depending on the capacity.

• Important notes for power cycle life expectancy

If run and stop are repeated at short-period cycles (for example, 30-minute run and 30-minute stop), a large difference in temperature occurs in the thyristor element, significantly shorting its life expectancy through thermal fatigue.
If such operations need to be performed, try to minimize the temperature fluctuation. Specifically, reduce the use rate of rated current to less than 80%. Or, choose an APR whose rated current is one level higher, so that the use rate of rated current is less than 80%.

AC Power Regulators
APR-D series

■ Specifications

Item			Specifications			
Type			**RPDW□020-T**	**RPDW□045-T**	**RPDW□060-T**	**RPDW□100-T**
Input	Number of phases		Three phases			
	Main circuit	Rated voltage	200 to 240 V AC ±10% (Performance guarantee), ±15% (Operation guarantee) (Note 1) 380 to 480 V AC ±10% (Performance guarantee), ±15% (Operation guarantee) (Note 1)			
		Frequency	50 Hz/ 60 Hz ±2.5 Hz (Must be the same as that of the control circuit.)			
	Control circuit	Rated voltage	200 to 240 V AC ±10% (Performance guarantee), ±15% (Operation guarantee) (Note 1)			
Output		Frequency	50 Hz/ 60 Hz ±2.5 Hz (Auto identification)			
		Power supply capacity	15 VA or less			
	Rated current (Ambient temperature: 40°C)		20A	45A	60A	100A
	Cooling system		Self-cooled			
	Applied load		Resistive load			
Control	Minimum load current		0.5 A (With 100% output of the rated input voltage)			
	Generation loss		75W	155W	196W	317W
	Waveform control method		Phase control/ cycle control (continuous)/ phase angle proportion control			
	Output voltage adjustment range		0 to 100% (RMS value) of the main-circuit line voltage (Where the voltage drop portion of the thyristor is excluded.)			
	Input/output characteristics		Linear characteristic of RMS value/ linearity: ±3%FS or less (phase control) Linearity: ±5%FS or less (cycle control) (With resistive load/ setting signal 10% to 90%)			
	Setting signal	Manual setting	Digital setting: Setting with front keys External variable resistor: 1 kΩ (B characteristics 1/2 W or more) HIGH/LOW (2-position control) contact signal: Digital setting through external wiring or front keys			
		Auto setting	Current signal: 4 to 20 mA DC (Zin = 100Ω) Voltage signal: 0 to 5 V DC (SSC signal: 0/12 V DC), 1 to 5 V DC (Zin = 11 kΩ) (Setting change with front keys)			
	Incline setting	Setting range	0 to 100% of output voltage			
		Setting equipment	Digital setting: Setting with front keys External variable resistor: 1 kΩ (B characteristics 1/2 W or more) Control input terminal "5V-M0" voltage signal: 1 to 5 V DC			
	Base load setting	Setting range	0 to 100% of output voltage			
		Setting equipment	Digital setting: Setting with front keys			
	Soft start, up/down time	Setting range	0 to 100 seconds			
		Setting equipment	Digital setting: Setting with front keys			
	Scanning interval setting	Setting range	0.5 to 2.0 seconds			
		Setting equipment	Digital setting: Setting with front keys			
Alarm function	CPU memory error		CPU memory error detection at the time of initiation			
	Power supply frequency failure		Detection of control power frequency outside the range from 45 to 65 Hz			
	Auto setting input, not connected (Note 2)		Detection of non-connection of current and voltage signals (Only with auto setting chosen for setting signals)			
	Manual setting input, not connected		Detection of non-connection of a manual setting device (Only with external variable resistor chosen regarding manual setting)			
	Incline setting input, not connected		Detection of non-connection of an incline setting device (Only with an external variable resistor or 1 to 5 V DC chosen regarding the incline setting)			
	Open phase/ phase sequence failure		Detection of open phase or phase sequence failure regarding the main-circuit power and control power			
	Data writing/reading error		Detection of read/write check errors regarding EEPROM			
	Communication failure (Note 3)		Detection of data transmission failure when in parallel run or network communications			
	Alarm output		Open collector 24 V DC/ 0.1 A 1 circuit			
Operational environment	Ambient temperature		-10°C to +55°C (When +40°C is exceeded, the load current is to be reduced.)			
	Storage temperature		-20°C to +60°C			
	Ambient humidity		+5 to +95%Rh (There must be no condensation.)			
	Others		There must be no action and vibration which induce corrosive gas (sulfurized gas, ammonia gas, etc.), fine particles, and insulation deterioration. Indoor, 1000 m or less altitude			
Insulation	Dielectric strength (Between the main circuit and the earth)		2 kV AC, 1 minute (200 to 240 V); 2.5 kV AC, 1 minute (380 to 480 V)			
	Insulation resistance (with the earth)		10 MΩ or more with 500 V DC megger			

Note 1: Performance guarantee designates satisfying specifications and assuring proper run of the product. Operation guarantee designates assurance of damage-free parts and proper run of the product.
Note 2: No operation occurs when voltage signal 0 to 5 V DC (0/12 V) has been set.
Note 3: Option type: ZAP or ZAM only

■ Wiring diagram

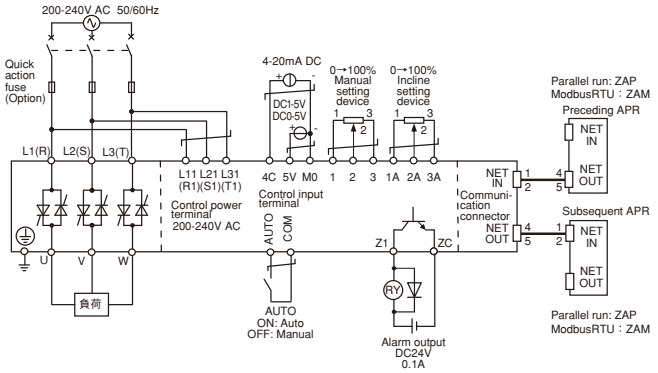

Three-phase APR-D External wiring diagram (Full connection)

• Positions and functions of connection terminals

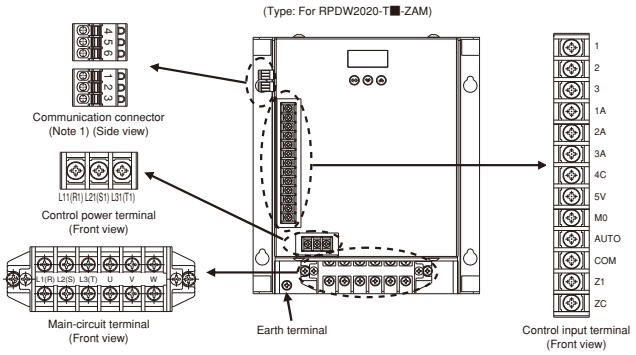

Note 1: To be supplied when the main unit's option "ZAM" is specified.

• Wiring of the main-circuit terminals and control power terminals

(1) When the main-circuit voltage is 200 to 240 V AC, 50/60 Hz

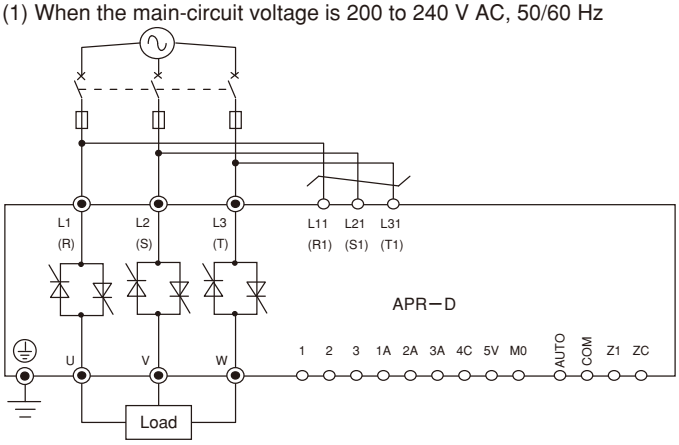

(2) When the main-circuit voltage is 380 to 440 V AC or 380 to 480 V AC, 50/60 Hz

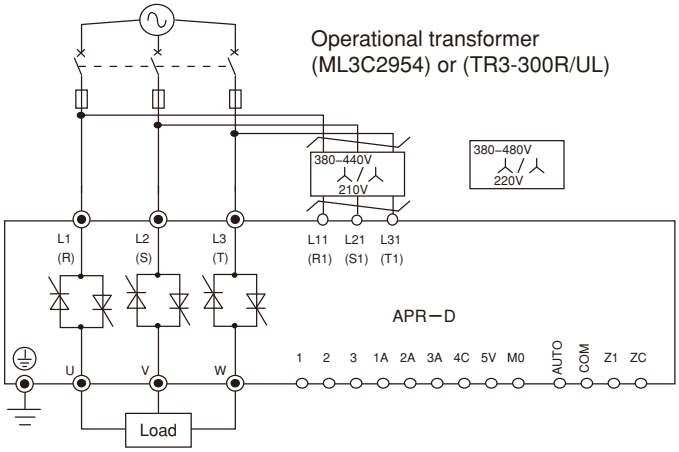

• Screw size and tightening torque

Terminal		Screw size		Tightening torque [N·m]±10%
Main-circuit terminal	L1 (R), U L2 (S), V L3 (T), W	20A product	M4	1.8 (18kgf·cm)
		45A product	M5	3.5 (35kgf·cm)
		60A product	M6	5.8 (58kgf·cm)
		100A product	M8	13.5 (135kgf·cm)
Earth terminal	⏚	20A product	M4	1.8 (18kgf·cm)
		45/60A product	M5	3.5 (35kgf·cm)
		100A product	M6	5.8 (58kgf·cm)
Control power terminal	L11 (R1), L21 (S1), L31 (T1)	20-100A product	M3	0.5 (5kgf·cm)
Control input connector	1 to ZC	–	M3	0.5 (5kgf·cm)
Communication connector	NET IN, NET OUT	–		–
Main-unit mounting screw		20A product	M4	1.8 (18kgf·cm)
		45/60A product	M5	3.5 (35kgf·cm)
		100A product	M6	5.8 (58kgf·cm)

• Terminal function

Terminal		Pin	Symbol	Name	Function description
Main-circuit terminal		—	L1 (R), L2 (S), L3 (T)	Main-circuit input terminal	Three-phase power input for the main circuit
		—	U, V, W	Main-circuit output terminal	APR output Connection of three-phase load
Earth terminal		—	⏚	Earth terminal	Earth terminal of the main unit
Control power terminal		—	L11 (R1) L21 (S1) L31 (T1)	Control power terminal	Power supply three-phase 200 to 240V input for the control circuit
Control input terminal		—	1, 2, 3	Manual setting input	Manual setting input through a variable resistor
		—	1A, 2A, 3A	Incline setting input	Incline setting input through a variable resistor
		—	4C, M0	Auto setting input	Auto setting input through 4 to 20mA DC
		—	5V, M0		Auto setting input or incline setting input through 1 to 5V DC Auto setting input (SSC signal input) through 0 to 5V DC (0/12V)
		—	AUTO, COM	Auto/manual switching input	External contact Close: Auto setting Open: Manual setting
		—	Z1, ZC	Alarm output terminal	When an alarm is generated, the internal open collector is On. Operation selection is possible with function code 5A (alarm function).
Communication connector	Net-work	1·2	NET IN	RS-485 input	Data reception/transmission from/to the master equipment
		4·5	NET OUT	RS-485 output	Connection with slave equipment or connection of a terminating resistor
	Parallel run	1·2	NET IN	Parallel run input	Data reception from the preceding APR
		4·5	NET OUT	Parallel run output	Data transmission to the subsequent APR

■ Other options

• Quick action fuse application table

APR type	Rated current	Voltage line	Quick action fuse type	Quick action fuse holder
RPDW2020 RPDW4020	20A	200V	CR2LS-30 (30A)	CM-1A (For 3-pole products)
		400V	CR6L-30 (30A)	CMS-4 (For 1-pole products)
RPDW2045 RPDW4045	45A	200V	CR2LS-75 (75A)	CM-1A (For 3-pole products)
		400V	CR6L-75 (75A)	CMS-5 (For 1-pole products)
RPDW2060 RPDW4060	60A	200V	CR2LS-100 (100A)	CM-1A (For 3-pole products)
		400V	CR6L-100 (100A)	CMS-5 (For 1-pole products)
RPDW2100 RPDW4100	100A	200V	CR2L-150 (150A)	CM-2A (For 3-pole products)
		400V	CR6L-150 (150A)	CMS-5 (For 1-pole products)

• Replacement adapter for APR-L (RPD002-W □□)

Type	Description
RPD002-W06	For RPDW4045-□, RPDW4060-□

Note: Attach the adapter to the mounting holes (for APR-L) on the board, and then attach the APR-D to the adapter.

• Clamp tool, etc.

Recommended stick terminal for wiring; and clamp tool Manufacturer: PHOEINX CONTACT

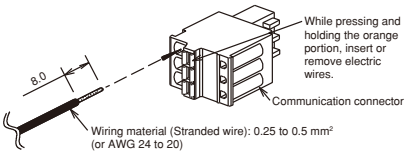

Product name	Type
Clamp tool	CRIMPFOX 6
Stick terminal with an insulating sleeve (AWG 24)	AI 0, 25–8 BU
Stick terminal with an insulating sleeve (AWG 22)	AI 0, 34–8 TQ
Stick terminal with an insulating sleeve (AWG 20)	AI 0, 5–8 WH

■ **The standard configuration of the APR-D series contains display/operation sections for various monitors and settings.**

• Names and functions of the individual parts

Name	Function
Drive monitor	Data display section 4th digit DP Run output Presence (lighting up)/ absence (going off)
Data display	4-digit 7-segment LED monitor The information below is shown depending on the operation modes. • When in monitor mode Run information (Output instruction value, input signal, etc.) When an alarm is generated, an alarm code is shown. The 4th digit shows items regarding various pieces of run information. • When in setting mode Information such as a function code and function code data is shown.
Alarm indica-tor	Data display section 1st digit DP Alarm Presence (blinking)/ absence (going off)

Name	Function
UP key DOWN key	Use, for example, to select run information shown on the data display section and to change the function code data. * Press and hold for one second or longer to perform auto switch of the data display.
MODE/ SET key	Use to switch the operation mode. Press and release to switch to the setting mode. • When selecting a function code in the setting mode Press and release to switch to function code data display. Press and hold for 1 second or longer to switch to the monitor mode. • When setting function code data in the setting mode Press and release to confirm data. Press and hold for 1 second or longer to cancel the setting and move to the monitor mode.

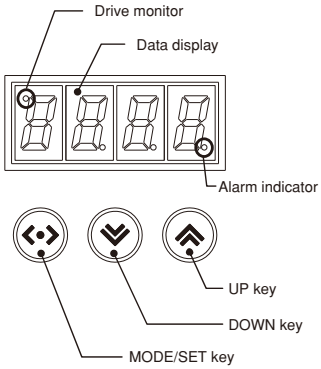

• Monitor mode

Operating the UP and DOWN keys causes the monitor items below to be shown. (The alarm code is shown only when a failure occurs.)

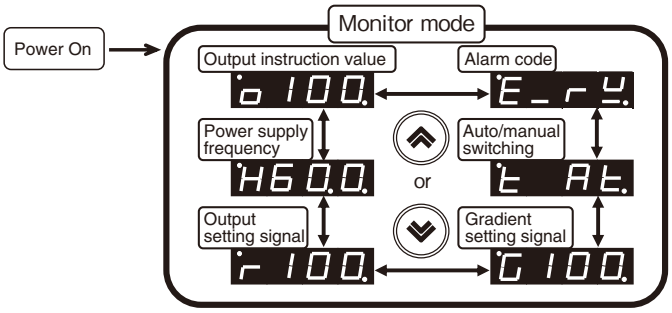

No	Monitor item	Function item display	Display	Unit	Display description
1	Output instruction value	o	100	%	Output instruction value through APR internal calculation
2	Power supply frequency	H	60.0	Hz	Power supply frequency detection value
3	Output setting signal	r	100	%	Setting signal detection value
4	Incline setting signal	G	100	%	Incline setting signal detection value
5	Auto/manual switching	t	At/m1	–	Auto/manual switching terminal status indication At: Auto setting m1: Manual setting
			Hi/Lo	–	Status indication regarding 2-position control Hi: HIGH setting Lo: LOW setting
6	Alarm code	E	_Sm	–	Indication when an alarm is generated (Example: Manual setting input non-connection)

• Setting mode

It is possible to set and confirm the data below, for each item:

Category	Display	Setting item	Description of the main functions
Data setting	1b._ _	Basic function 1 b code (1b.01 to 1b.07)	Setting to be used for basic APR operations Mainly substitute of external volume
	2b._ _	Basic function 2 b code (2b.01 to 2b.07)	Setting to be used for basic APR operations Mainly function selection
	4n._ _	Network function n code (4n.01 to 4n.08)	Communication relating setting
	5A._ _	Alarm function A code (5A.02 to 5A.09)	Alarm output setting
Setting option	6o._ _	Setting option function o code (6o.01 to 6o.04)	Utility function setting (For example, display of function codes changed from factory defaults and restriction of operations of the setting display section)
Initial setting	0i._ _	Initial setting function i code (0i.04 to 0i.05)	Communication protocol setting, ROM version check

Setting item	Setting signal		Function code	Function code data
Auto setting	Current signal	4–20mA DC	–	–
	Voltage signal	1–5V DC	2b.03 (Auto setting voltage signal selection)	1–5v (1–5V DC)
		0–5V DC		0–5v (0–5V DC (0/12V))
Manual setting	Setting indication section		2b.01 (Manual setting device selection)	Aod (Setting indication section)
	External variable resistor	1–2–3		m-vr (External variable resistor)
Incline setting	Setting indication section		2b.02 (Incline setting device selection)	Aod (Setting indication section)
	External variable resistor	1A–2A–3A		G-vr (External variable resistor)
	Voltage signal			5vm0 (Voltage setting signal)
Slave function (ZAP)	–		4n.01 (Master/slave selection)	no.2- (Slave)

• Example of setting groups

Function code	Name	Function code data (Settable range)	Step size	Unit	Factory default
1b.01	Manual digital setting	0 to 100.0(%)	0.1	%	0
1b.02	Incline digital setting	0 to 200.0(%)	0.1	%	100.0
1b.03	Base load setting	0 to 100.0(%)	0.1	%	0
1b.04	Soft start time setting	0 to 100.0(second)	0.1	seconds	0.5
1b.05	Soft up time setting		0.1	seconds	0.5
1b.06	Soft down time setting		0.1	seconds	0.5

• Incline setting/ base load setting

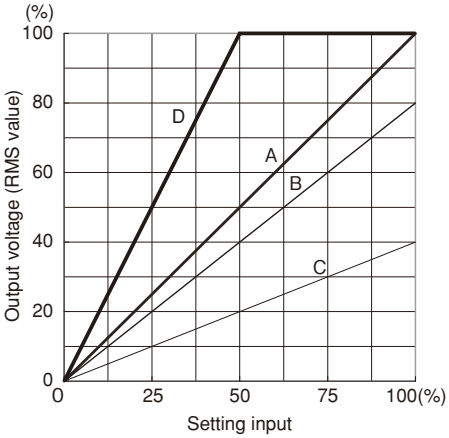

Characteristics	Output adjustment range (%)	Base load setting (%)	Incline setting (%)
A	0 to 100	0	100
B	0 to 80	0	80
C	0 to 40	0	40
D	0 to 100	0	200

Incline setting: Set an output value to be presented when setting input is 100%. (Setting range: 0 to 200%)
Note: The upper limit output value is 100% of input voltage.

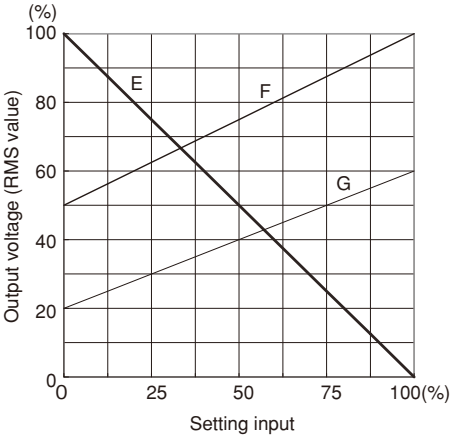

Characteristics	Output adjustment range (%)	Base load setting (%)	Incline setting (%)
E	100 to 0	100	0
F	50 to 100	50	100
G	20 to 60	20	60

Base load: Set an output value to be presented when setting input is 0%. (Setting range: 0 to 100%)
Actual output represents characteristics resulted from the connection between a base load setting value and incline setting value using a straight line.

■ Dimensions, mm

• Outline dimensions and mass

Outline dimensions

	20A	45A/60A	100A
W	185	240	291
H	215	265	345
D	135	170	215

Note: The outline dimensions of the 200 V series and 400 V series are identical.

Mass

20A	45A/60A	100A
2.6kg	6.8kg	10.0kg

Note: The mass of the 200 V series and 400 V series is identical.

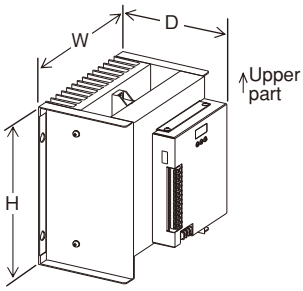

• Mounting pitch (Drilling)

Mounting pitch

	20A	45A/60A	100A
A	170	222	270
B	145	165	245
C	185	240	291
D	215	265	345
E	7.5	9	10.5
F	35	50	50
Mounting screw	M4	M5	M6

Note: The outline dimensions of the 200 V series and 400 V series are identical.

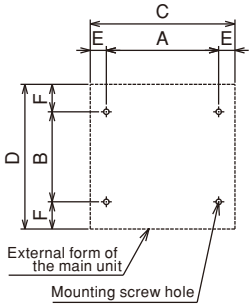

• Supplied item (If specified in ordering information)

Setting device Type: RPD001	To be used for setting methods including variable resistor setting, 2-position control, and incline setting.

Rating: 1 kΩJ, 2.5 W Type: RA30Y20SB102J (Manufacturer: TOKYO COSMOS)

Variable resistor

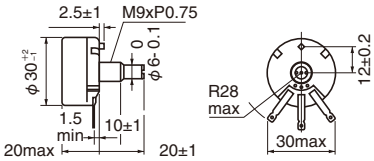

Mounting hole processing drawing

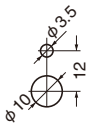

Nameplate

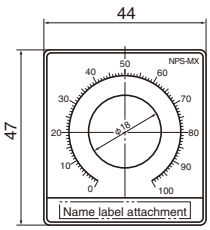

Knob

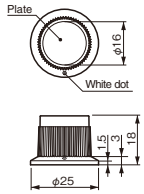

Name label sheet
(Japanese/English, 8 kinds)

手動設定	MANUAL SET.
勾配設定	GRADE SET.
HIGH設定	HIGH SET.
LOW設定	LOW SET.

Operational transformer Type: ML3C2954	To be supplied when the input voltage code is 4 Note: CE marking, not supported

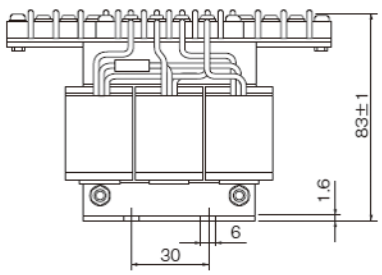

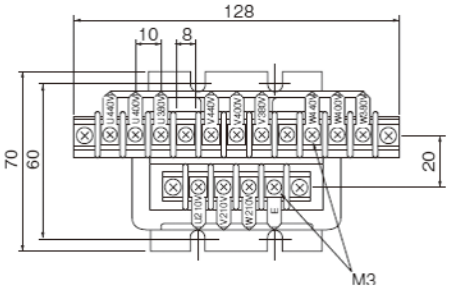

Output current	For 20 to 100 A
Rating	3φ, 380, 400, 440V/210V 20VA
Type	ML3C2954

Mass: 1.7 kg

Note: For TR3-300R/UL, which satisfies the CE marking, see the page for the APR-N series.

■ Important notes for installation

(1) Install in a dust-free place with high cooling effect. So that heat radiation from APRs is possible, mount to a vertical metal object, confirm the vertical orientation shown to the right, and ensure sufficient vertical and horizontal clearance among the units. If placing APRs closely one another, ensure sufficient clearance beyond the dimensions indicated in the Figure (shown to the right) to reduce heat interference among the APRs.

(2) Heat generation of an APR raises the temperature inside the panel. Considering expected temperature rise, implement measures such as cooling and ventilation. (The upper limit of temperature inside the panel is 55°C.) The reference ambient temperature for the rated current is 40°C.
When it exceeds 40°C, reduce the load current.

(3) Ensure a clearance with nearby objects, considering the work space of wiring tools at the individual terminals.

(4) The top of an APR has a partial opening. Be careful not to drop any object into the opening.

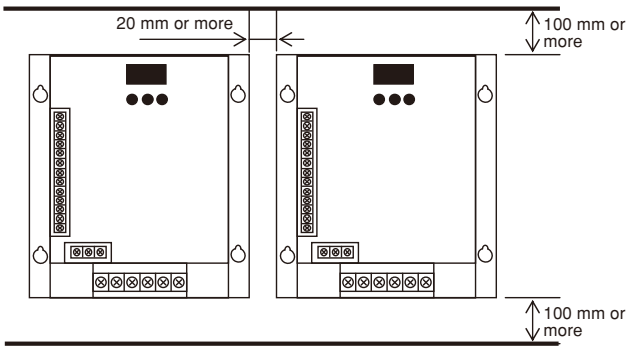

Installation interval

AC Power Regulators
APR-αA series

Single AC power regulators APR-αA series

■ Features
- Low cost
- Compact and lightweight

N89-6169-1

■ Type number nomenclature

RPA E 2 □□□

Product category RPA
APR- α A series

Number of phases
E: Single phase

Rated current
010: 10 A
020: 20 A
030: 30 A
060: 60 A

2: Both for 100-110 V, 200-220 V

■ Types and specifications

Product category	Input voltage	Output current (A)	Type
APR-αA Series	Both for 100-110 V and 200-220 V	10	**RPAE2010**
		20	**RPAE2020**
		30	**RPAE2030**
		60	**RPAE2060**

■ Dimensions, mm

・RPAE2010 type (10A)

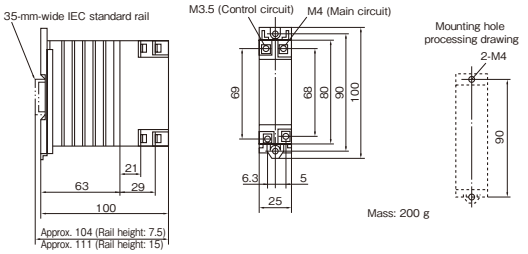

・RPAE2030 type (30A)

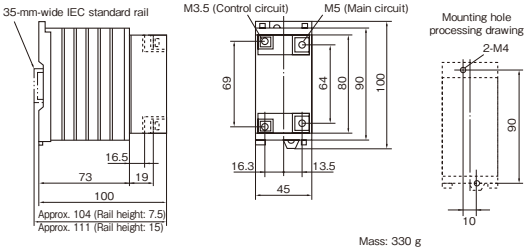

・RPAE2020 type (20A)

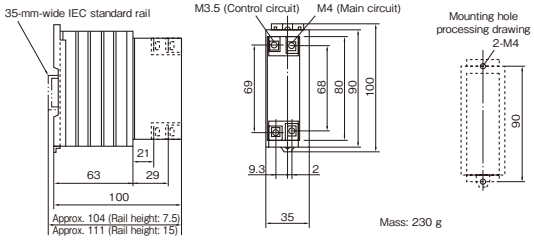

・RPAE2060 type (60A)

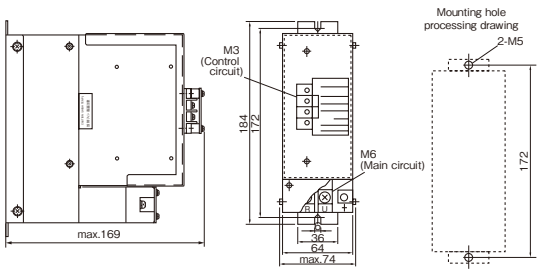

Fuji Electric FA Components & Systems Co., Ltd.
Information subject to change without notice

■ Specifications

Item / Series name		αA Series	
Type		**RPAE20□□**	
Applied load		Resistive load	
Rated output current		10, 20, 30	60
Minimum load current		0.8 A (100 V series), 0.3 A (200 V series)	0.3A
Input power	Number of phases	Single phase	
	Rated input voltage and frequency	100-110V AC 200-220V AC	
	Input voltage fluctuation	±10% of rated input voltage	
	Frequency fluctuation	50/60Hz±1Hz	
	Minimum main-circuit input voltage	–	
Cooling system		Self-cooled	
Control	Waveform control method	Phase control method	
	Output voltage adjustment range	20 to 96% (100 V series) 10 to 98% (200 V series)	25 to 96% (100 V series) 25 to 98% (200 V series)
	Incline setting range	–	
	Setting signal	Variable resistor (Note 3)	
	Soft start and soft up/down	–	
Protection	Short-circuit protection	By an external quick action fuse (Option)	
	Overcurrent	–	
	Fan malfunction	–	
	Input voltage drop protection (Control power)	–	
Display	Overcurrent, fan malfunction	–	
	Load current	–	
	Control power	–	
Environment	Ambient temperature (Performance guarantee) Ambient temperature (Operation guarantee)	0 to +40°C (When +40°C is exceeded, the rated current value shall be decreased.) -15 to +55°C	
	Storage temperature	-20 to +60°C	
	Relative humidity	30 to 90% RH (There must be no condensation.)	
	Environment	There must be no factor, action, and vibration which induce corrosive gas, fine particles, and insulation deterioration.	
Insulation	Dielectric strength (with the earth)	2000 V AC, 1 minute; for an external variable resistor, 1000 V AC, 1 minute	
	Insulation resistance (with the earth)	20 MΩ or more (with 500 V DC megger)	

Note 1: Even when output is 0 V, leakage current (200 V input: 30 mA or less) flows in load due to factors such as a CR being connected with the main control element in parallel, keeping an electric charge and resulting in non-insulation from the power supply.
Note 2: Control is not possible in load open status. The minimum load current or more shall be flowed at the rated input voltage.
Note 3: The electric potential of the variable resistor is the same as that of the main circuit. In a case where 2000 V AC dielectric strength is needed, the variable resistor shall be insulated with a Bakelite board (etc.).

■ Important notes for selections

- **Ambient temperature/ allowed load current characteristics**
  The rated current of the APR-αA assumes that the ambient temperature is 40°C. If the ambient temperature is over this value, decrease the load current as below:

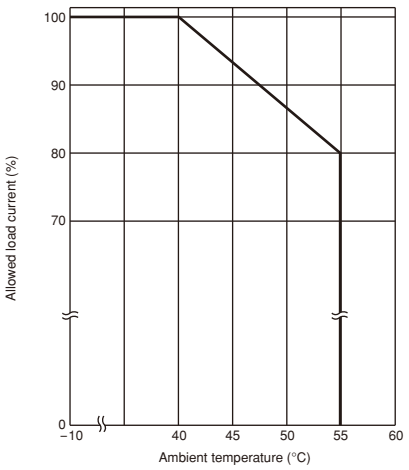

- **Fuse**
  The main circuit does not contain a fuse, so attach a quick action fuse.
- **Amount of internal heat generation**
  The amount of heat generation inside the APR-αA is as below. Appropriate ventilation and cooling shall be performed inside the panel.

Rated current (A)	10	20	30	60
Amount of heat generation (W)	11	25	36	72

- The cooling fin becomes very hot and causes burn injury if touched. Never touch it when the product is in operation.
- Considering that a large inrush current flows in an incandescent lamp (a current that is ten times larger than a steady-state current for approx. 1/20 seconds to several seconds), choose the rated current very carefully.
- For αA type 10/20/30 A products, triac is used as a main-control element. Be careful because triac can be easily affected by power distortion, resulting in instable output. In a case where multiple APRs are used through three-phase open delta wiring, lump wiring over a single phase may result in stable output.

AC Power Regulators
APR-αA series

■ Output characteristics
• Resistive load (Representative example)

・RPAE2010, RPAE2020, RPAE2030

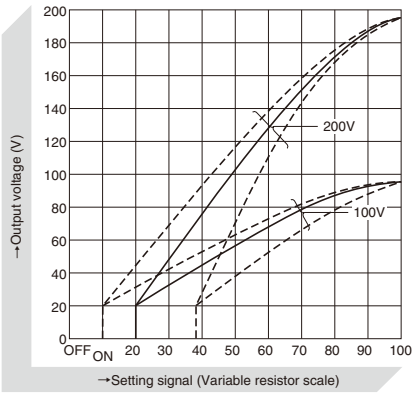

・RPAE2060

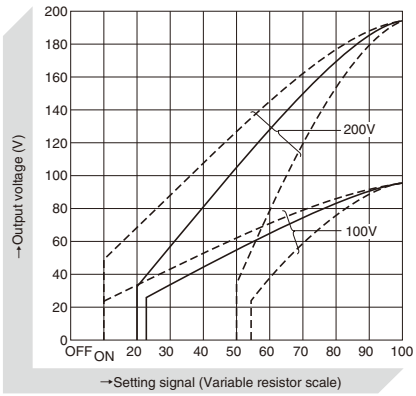

Note 1: Output characteristics change depending on the voltage and frequency of the power supply.
2: The solid lines represent typical characteristics.
3: The dotted lines designate fluctuation ranges.

Quick action fuse application table (Option)

Rated current (APR type)	Quick action fuse type (Rated current) (Made by Fuji Electric)
10A (RPAE2010)	CR2LS-10 (10A)
20A (RPAE2020)	CR2LS-20 (20A)
30A (RPAE2030)	CR2LS-30 (30A)
60A (RPAE2060)	CR2LS-100 (100A)

Note 1: As a fuse holder, use the CM-1A type.
2: When the frequency of run and stop is high, the load current shall be 80% or less of the rated current to moderate deterioration of the fuse.

■ Setting device (Option)

(1) Applicable to RPAE2010, 2020, and 2030

Setting method	Type	Supplies
Variable resistor setting (A)	**RPAE-A**	Nameplate (setting), variable resistor, knob: One each

Note: For both 100 V and 200 V
Do not use for RPAE2060.

(2) Applicable to RPAE2060

Rated input voltage	Setting method	Type	Supplies
100V	Variable resistor setting (A)	**RPAE-1A**	Nameplate (setting), variable resistor, knob: One each
200V	Variable resistor setting (A)	**RPAE-2A**	Nameplate (setting), variable resistor, knob: One each

D2

[mm]

1

Variable resistor
Applicable to RPAE2010, 2020, and 2030

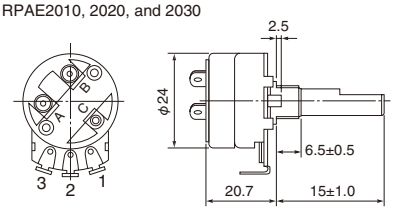

50 kΩ (K) 0.5 W
Switch-equipped

Mounting hole processing drawing

Applicable to RPAE2060

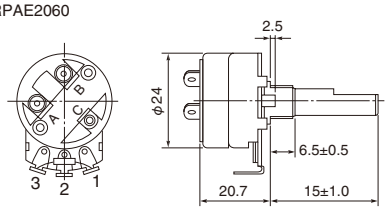

For 100 V	250kΩ(k)0.5W
For 200 V	500kΩ(k)0.5W
Switch-equipped, fix resistor-equipped	

Mounting hole processing drawing

2

Nameplate

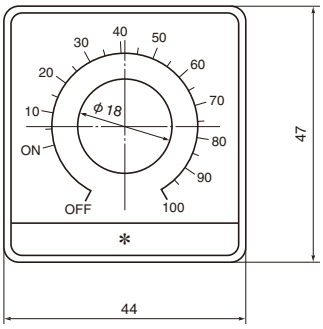

Type	Names of the parts in the portion marked with an asterisk
RPAE-A	Setting
RPAE-1A	
RPAE-2A	

3

Knob

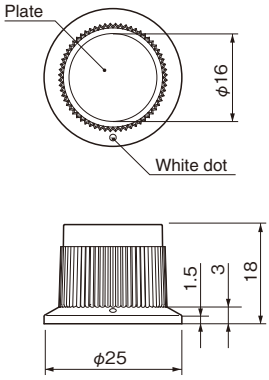

Note: A variable resistor, nameplate, and knob compose a set.

■ Important notes for use

• Wiring diagram (Main circuit, setting circuit)

Continuous control and high-low control can be easily performed merely by attaching a load through the power supply to the portion between R and U of the main terminal and attaching a setting device to the portion between terminal 3 and C. The wires coming from the setting device shall be within 5 m, and two wires shall be twisted. Moreover, separate them from the main-circuit wiring as far as possible.

・RPAE2010, RPAE2020, RPAE2030

Variable resistor setting (A)

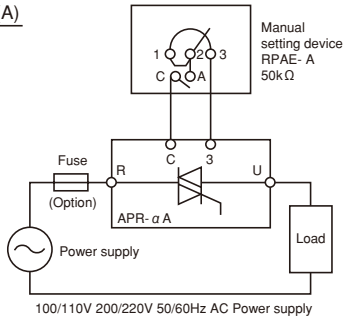

2-position control (B)

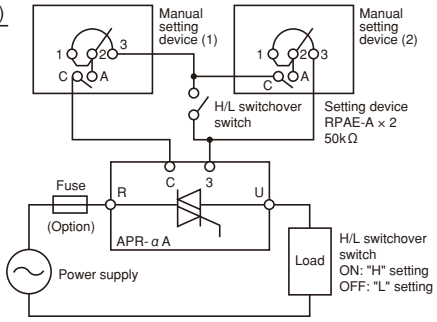

Note: Wiring has not been conducted for 1, 2 and 2, A in the variable resistor and thus short-circuiting is needed.

・RPAE2060

Variable resistor setting (A)

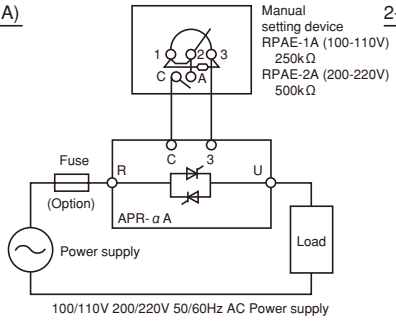

2-position control (B)

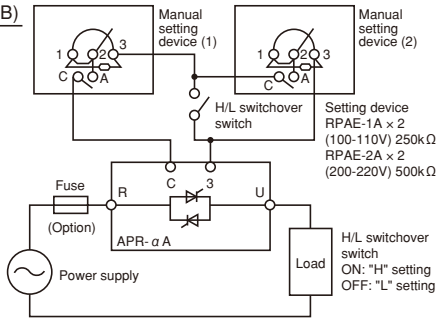

Note: Wiring has been conducted for 1, 2 and 2, A in the variable resistor and for the fixed resistor.

■ Important notes

(1) The relay to be used for 2-position control shall have its contact gold-plated.
Example: Fuji industrial control relay HH52PW-J

(2) Only a resistive load can be applied to this APR as a load. Wiring shall be conducted so that connection to load does not induce an inductive component. Be careful because it is not possible to apply to inductive load and the primary control of a transformer.
For inductive load and the primary control of a transformer, use the APR-D series, APR-N series, or PWM-APR series. For pure metal (resistive load) such as tungsten, molybdenum, tantalum, and platinum, use the APR-N series equipped with a current restriction function.

(3) A large inrush current flows in an incandescent lamp (a current that is ten times larger than a steady-state current for approx. 1/20 seconds to several seconds). Be careful with it.

(4) The cooling fin becomes very hot and causes a burn injury if touched. Never touch it when the product is in operation.

(5) For 10/20/30 A products, triac is used as a main-control element. Be careful because triac can be easily affected by power distortion, resulting in instable output. (A 60 A product, which adopts a thyristor, is much less affected.) Power distortion tends to occur when the power supply capacity is insufficient and multiple APRs are used. Especially when the three-phase open delta wiring has been adopted, power distortion may occur across phases, resulting in malfunction. If this happens, lump writing to a single phase shall be performed.

(6) When soldering wires to the terminals (1, 2, 3, A, C) of the variable resistor for a setting device, be careful not to heat the terminals excessively with a solder iron. Especially, terminal C may be damaged if heated excessively.

AC Power Regulators
Applications

■ Applications

The FUJI APRs use semiconductor devices as main-circuit switching elements to realize long life and high reliablity. As such, they are suitable for applications in which frequent load switching is required. Typical applications is high-precision control of heater temperature.

The FUJI APRs have no mechanical contacts. This means that the FUJI APRs do not generate noise when switching loads and they are suitable for use in quiet places or at night.

• Applications for heater control

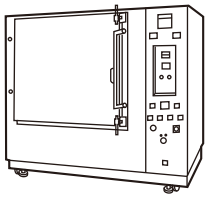

Constant temperature chamber

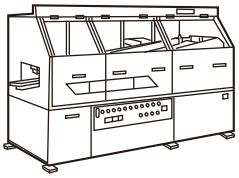

Soldering bath

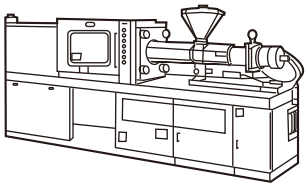

Plastic injection-mold machine

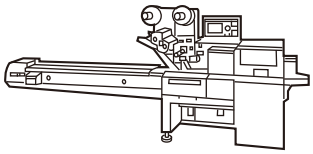

Pacing machine

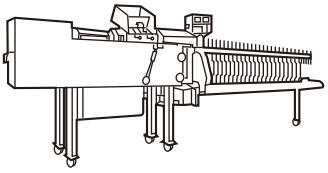

Filling machine

• Applications in quiet places

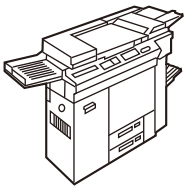

Copying machine

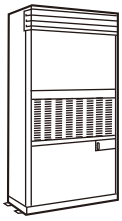

Air-condittioning equipment

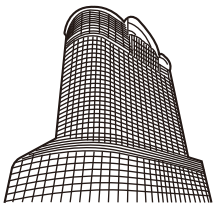

Swithchborad in a hotel

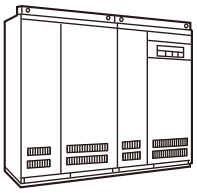

Power supply system for computers

Power supply system for hospital

Fuji Electric FA Components & Systems Co., Ltd.
Information subject to change without notice

■ Quick selection guide

Series	**RNFTD, RNFDS series** (Rail mounting type)	**RNFTC series**	**RNFMC series** (Standard type)	**RNFHA series** (High-performance type)
			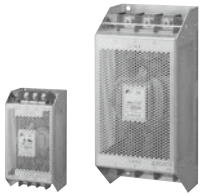	
Circuit	RNFTD : Input circuit RNFDS : Output circuit	Input circuit	Input circuit	Input circuit
Phase	Three-phase	Three-phase	Three-phase	Three-phase
Rated voltage	250V/480V	250V/480V	250V, 480V	200-250V, 380-440V
Rated current	RNFTD : 6 to 30A RNFDS : 5 to 30A	50A	250V : 60 to 600A 480V : 75 to 1260A	5 to 100A
Feature	• For the mounting method, both the 35 mm-width IEC standard rail and M4 screw mounting are possible. • The product uses a terminal coverless structure that prevents terminal screws from falling and serves as a finger protector. • It is 71% lighter than our company's conventional products.	• Overseas safety standards (UL1283, CSA C22.2, No.8, EN60939-2) acquired. • The external terminal has the same durable structure as the field-wiring terminal. • A resin case model that is integrated with the terminal block.	• Products with rated current of 75 and 100 A have acquired overseas safety standards (UL1283, CSA C22.2, No.8, EN60939-2). • Models with a rated current of 60A or 150 A and above were designed based on overseas standards. • The external terminal is certified as a field-wiring terminal.	• The best noise damping performance. (compared to our other products) • Reliably prevents noise from inverters and such.
Page	D2-44	D2-46	D2-49	D2-52

Series	**RNFTS, RNFMS series**	**RNFT, RNFM series** (for APR)	**RNFT series** (Rail mounting type)
		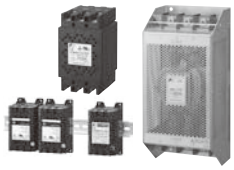	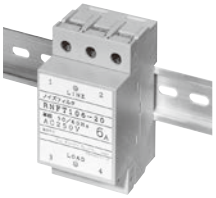
Circuit	Output circuit	Input circuit	Input circuit
Phase	Three-phase	Single-phase, Three-phase	Single-phase
Rated voltage	250V, 480V	250V, 480V	250V
Rated current	250V : 50 to 90A 480V : 40 to 100A	6 to 600A	3 to 10A
Feature	• Prevents noise from inverter output lines. • Combining with another power filter for input circuits offers excellent damping performance. • The external terminal has the same durable structure as the field-wiring terminal. • The RNFTS product category has products with a resin case model integrated with the terminal block.	• The damping circuit structure optimized to handle APR noise allows for excellent damping performance. • Besides the APR, it also has a noise damping effect as a single-phase/three-phase device noise filter. • A wide range of products is available. • For the APR input side (power supply side) circuit.	• Has excellent noise damping performance. • TRAFY effectively eliminates normal mode noise conducted between power lines, and common mode noise conducted between power lines and the ground. • The entire unit is coated in insulating material, giving it high protection from electric shock. Terminal section electric shock protective cover included as standard accessory.
Page	D2-55	D2-57	D2-63

Noise Suppression Filters
RNFTD, RNFDS series

■ Features

- For the mounting method, both the 35 mm-width IEC standard rail and M4 screw mounting are possible.
- The product uses a terminal coverless structure that prevents terminal screws from falling and serves as a finger protector.
- It is 71% lighter than our company's conventional products.
- Combining with another power filter for output circuits further improves damping performance.
- CE marking (low voltage command 2014/35/EU applicable)
- The one for input circuit use has obtained UL, CSA, and EN certification by standard.
- Compatible with revised Chinese version

Approved certified safety standard (RNFTD product category only)		File No.
c UL us	UL1283	E210696
	CSA C22.2, No.8	
TÜV Rheinland	EN60939-2	R 50023040 R 50023039

■ Type number nomenclature

RNF□□ – □□ □□

Product category

Product category	Code
Rail-mounting type for three-phase input circuits Power filter	RNFTD
Rail-mounting type for three-phase output circuits Power filter	RNFDS

Rated voltage

Rated voltage (V)	Code
250	20
480	40

Rated current

RNFTD series

Rated current (A)	Code
6	06
10	10
20	20
30	30

RNFDS series

Rated current (A)	Code
5	05
10	10
20	20
25	25
30	30

D2

■ Ratings and specifications, types, product codes, delivery time

●For input circuit RNFTD product category

Type	No. of phases	Rated voltage [V]	Rated current [A]	Dielectric strength (V) (Line-Ground)	Leakage current [mA]	Voltage decrease [V]	Operational ambient temperature [°C]	Certification by safety standard
RNFTD06-20	Three phase	250	6	2,000 AC one min.	One-phase grounding 1.0 or less	1.0 or less	–10 - +50	c UL us, TÜV Rheinland
RNFTD10-20			10					
RNFTD20-20			20					
RNFTD30-20			30		Same as above, 1.5 or less			
RNFTD06-40		480	6	2,000 AC one min.	Neutral point grounding 1.0 or less			
RNFTD10-40			10					
RNFTD20-40			20					
RNFTD30-40			30		Same as above, 2.0 or less			

●For output circuit RNFDS product category

Type	No. of phases	Rated voltage [V]	Rated current [A]	Dielectric strength (V) (Line-Ground)	Voltage decrease [V]	Operational ambient temperature [°C]
RNFDS05-20	Three phase	250	5	2,000 AC one min.	1.0 or less	–10 - +50
RNFDS10-20			10			
RNFDS20-20			20			
RNFDS30-20			30			
RNFDS10-40		480	10	2,500 AC one min.		
RNFDS20-40			20			
RNFDS25-40			25			
RNFDS30-40			30			

■ Circuit configuration

●For input circuit RNFTD product category

250 V products

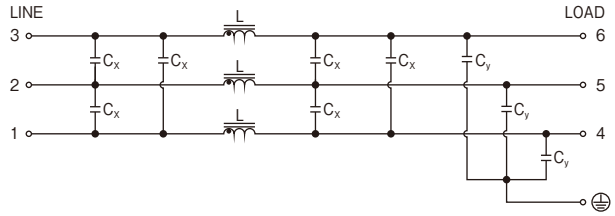

480 V products

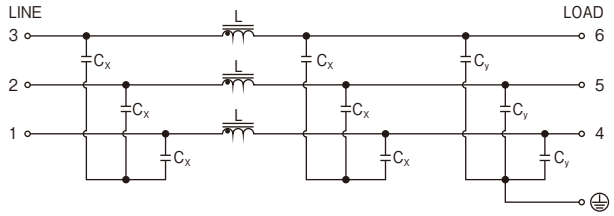

●For output circuit RNFDS product category

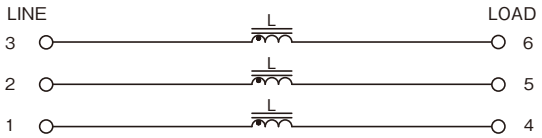

■ Noise damping performance example

●Dynamic characteristics (representative example: RNFTD06-20)

No filter (inverter only)
Noise terminal voltage (QP value)

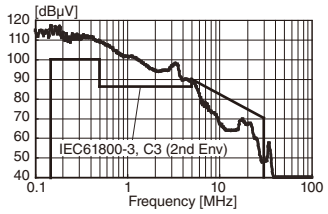

When inserting RNFTD06-20
Noise terminal voltage (QP value)

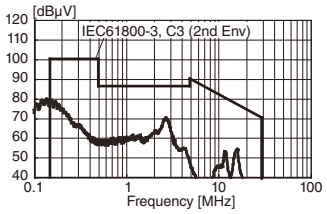

When inserting RNFTD06-20 + RNFDS05-20
Noise terminal voltage (QP value)

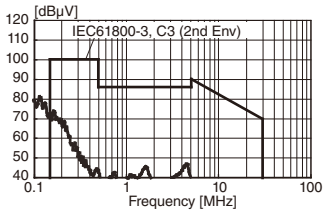

●Static characteristics (representative example: RNFTD06-20)

Normal mode

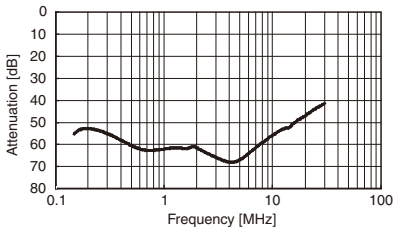

Common mode

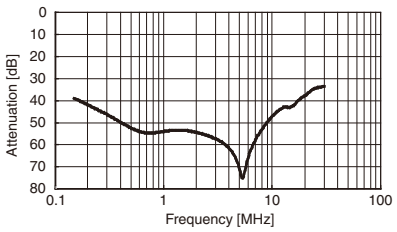

■ External dimensions [unit: mm]

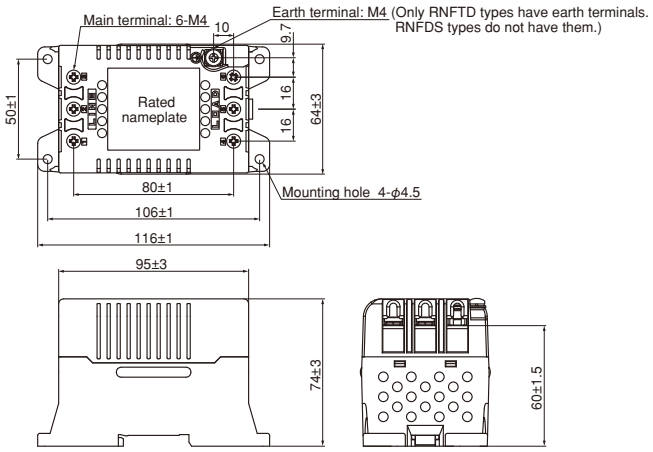

Type	Mass
RNFTD06-20	500 g or less
RNFTD10-20	
RNFTD20-20	
RNFTD30-20	
RNFTD06-40	
RNFTD10-40	
RNFTD20-40	
RNFTD30-40	
RNFDS05-20	
RNFDS10-20	
RNFDS20-20	
RNFDS30-20	
RNFDS10-40	
RNFDS20-40	
RNFDS25-40	
RNFDS30-40	

Application: IEC35 mm rail
Type: TH35-15AL (made by Electric FA Components & Systems Co., Ltd.)

Noise Suppression Filters
RNFTC series

■ Features

- Overseas safety standards (UL1283, CSA C22.2, No.8, EN60939-2) acquired.
- The external terminal has the same durable structure as the field-wiring terminal.
- A resin case model that is integrated with the terminal block.
- Because there is little current leakage, there is a very low risk of malfunctions of the earth leakage circuit breaker.
- Combining with another power filter for output circuits improves damping performance.
- CE marking (low voltage command 2014/35/EU applicable)
- Compatible with revised Chinese version

Approved certified safety standard		File No.
c UL us	UL1283	E210696
	CSA C22.2, No.8	
TÜV Rheinland	EN60939-2	R 50023040 R 50023039

■ Type number nomenclature

RNFTC □□ - □□

Series class

Series class	Code
Power filter for input circuit Standard type (Resin case)	RNFTC

(Note 1) For single phase input, leave the intermediate phase open.
(Note 2) The rated voltage is the maximum circuit voltage.
100 V AC and 200 V AC circuit voltage can be used as well.

Rated voltage

Rated voltage [V]	Code
250	20
480	40

Rated current

Rated current (A)	Code
50	50

■ Ratings and specifications, types, product codes, delivery time

Type (=Product code)	No. of phases	Rated voltage [V]	Rated current [A]	Dielectric strength (V) (Line-Ground)	Leakage current [mA]	Voltage decrease [V]	Operational ambient temperature* [°C]	Certification by safety standard	Outline drawing
RNFTC50-20	Three phase	250	50	2,000 AC one min.	One-phase grounding 1.0 or less	1.0 or less	−10 - +50	c UL us TÜV Rheinland	Fig. 1
RNFTC50-40	Three phase	480	50	2,500 AC one min.	Neutral point grounding 1.0 or less One-phase grounding 6.5 or less	1.0 or less	−10 - +50		Fig. 1

(Note) For the 6-30A model, refer to the RNFTD product category on Page D2-44.

■ Circuit configuration

250 V products

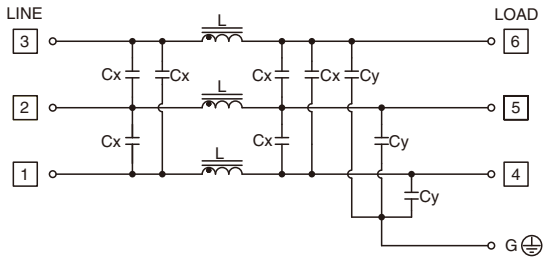

480 V products

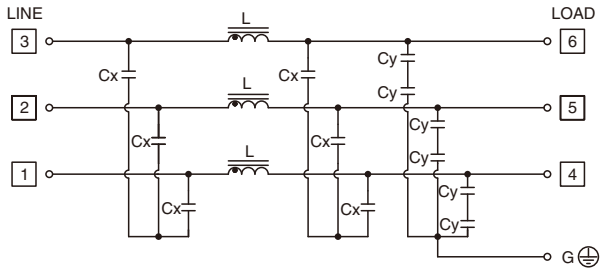

■ Noise damping performance

●Static characteristics (representative example: RNFTC50-20)

Normal mode

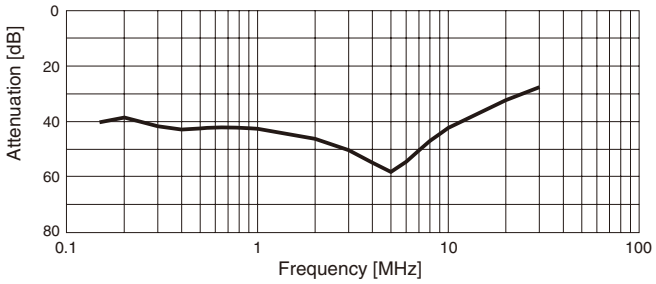

Common mode

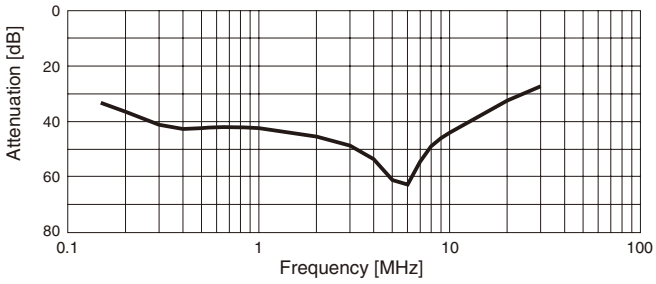

Noise Suppression Filters
RNFTC series

■ Outline drawing (Unit: mm)

Figure 1: RNFTC 50-20, 50-40

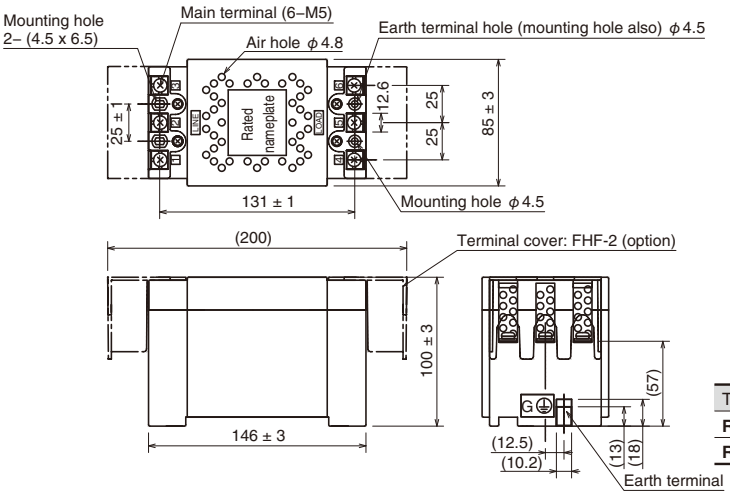

Type	Mass (kg)
RNFTC50-20	1.1
RNFTC50-40	1.6

Noise Suppression Filters
RNFMC series (Standard type)

■ Features

- Products with rated current of 75 and 100 A have acquired overseas safety standards (UL1283, CSA C22.2, No.8, EN60939-2).
- Models with a rated current of 60A or 150 A and above were designed based on overseas standards.
- The external terminal is certified as a field-wiring terminal.
- We used our company's proprietary technology to make it smaller and lighter.
- Because there is little current leakage, there is a very low risk of malfunctions of the earth leakage circuit breaker.
- Combining with another power filter for output circuits improves damping performance.
- CE marking (low voltage command 2014/35/EU applicable)
- Compatible with revised Chinese version

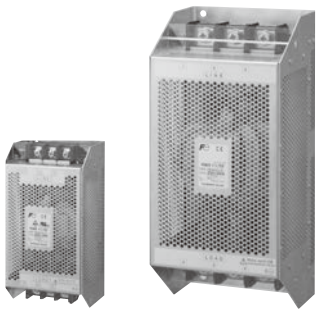

Approved certified safety standard		File No.
c UL us	UL1283	E210696
	CSA C22.2, No.8	
TÜV Rheinland	EN60939-2	R 50023040 R 50023039

■ Type number nomenclature

RNFMC □□ - □□

Series class

Series class	Code
Power filter for input circuit Standard type (Metal case)	RNFMC

(Note 1) For single phase input, leave the intermediate phase open.
(Note 2) The rated voltage is the maximum circuit voltage.
100 V AC and 200 V AC circuit voltage can be used as well.

Rated voltage

Rated voltage [V]	Code
250	20
480	40

Rated current

Rated current (A)	Code
60	60
75	75
100	1H
150	H1
200	2H
300	3H
400	4H
500	5H
600	6H
900	9H
1260	12H

■ Ratings and specifications, types, product codes

Type (=Product code)	No. of phases	Rated voltage [V]	Rated current [A]	Dielectric strength (V) (Line-Ground)	Leakage current [mA]	Voltage decrease [V]	Operational ambient temperature* [°C]	Certification by safety standard	Outline drawing
RNFMC60-20	Three phase	250	60	2,000 AC one min.	One-phase grounding 1.5 or less	1.0 or less	–10 - +50	–	Fig. 1
RNFMC75-20			75					c UL us	
RNFMC1H-20			100					TÜV Rheinland	Fig. 2
RNFMCH1-20			150		One-phase grounding 3.0 or less			–	Fig. 3
RNFMC2H-20			200						Fig. 4
RNFMC3H-20			300						Fig. 5
RNFMC4H-20			400						Fig. 6
RNFMC5H-20			500		One-phase grounding 9.5 or less				Fig. 7
RNFMC6H-20			600						
RNFMC75-40	Three phase	480	75	2,500 AC one min.	Neutral point grounding 1.0 or less	1.0 or less	–10 - +50	c UL us	Fig. 1
RNFMC1H-40			100		One-phase grounding 9.0 or less			TÜV Rheinland	Fig. 2
RNFMCH1-40			150		Neutral point grounding 2.1 or less			–	Fig. 3
RNFMC2H-40			200						Fig. 4
RNFMC3H-40			300		One-phase grounding 19.0 or less				Fig. 5
RNFMC4H-40			400						Fig. 6
RNFMC5H-40			500		Neutral point grounding 9.9 or less				Fig. 7
RNFMC6H-40			600						
RNFMC9H-40			900		Neutral point grounding 10.0 or less				Fig. 8
RNFMC12H-40			1260						Fig. 9

*The CSA Cold Test was passed at -25℃.

Noise Suppression Filters
RNFMC series (Standard type)

■ Circuit configuration

250 V products

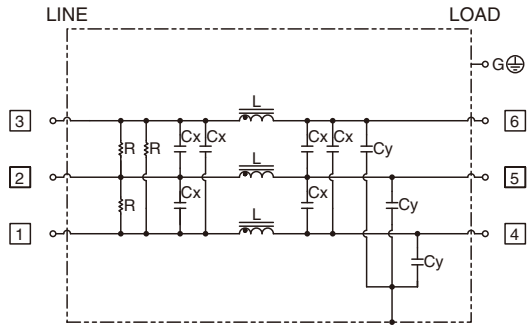

480 V products

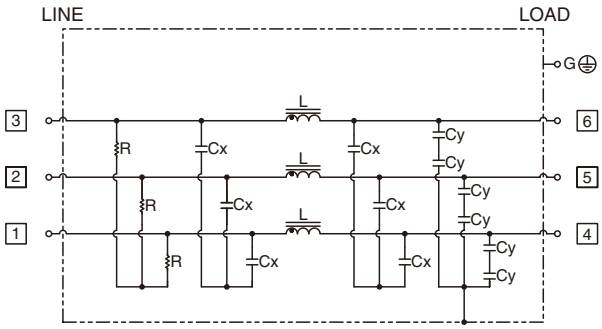

■ Noise damping performance

●**Dynamic characteristics** (representative example: Combining RNFMC75-20 and RNFMS75-20 for output circuits produces the noise terminal voltage damping effect of our company's inverters)

RNFMC (for input circuit) only

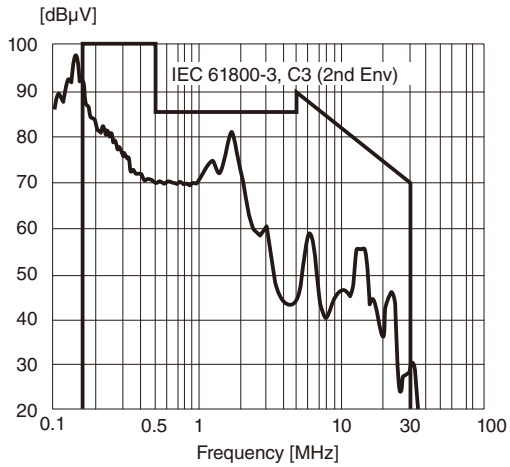

RNFMC + RNFMS (combination of input circuit/output circuit types)

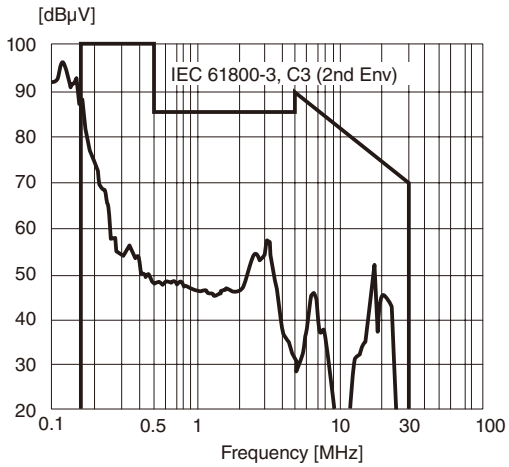

●**Static characteristics** (representative example: RNFMC75-20)

Normal mode

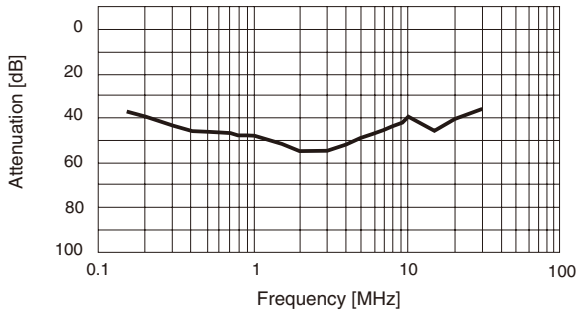

Common mode

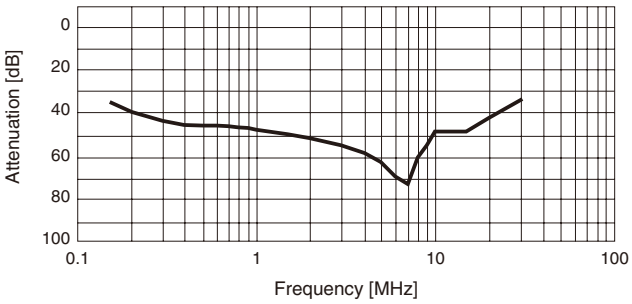

External dimensions [unit: mm]

Figure 1: RNFMC60-20, 75-20, 40

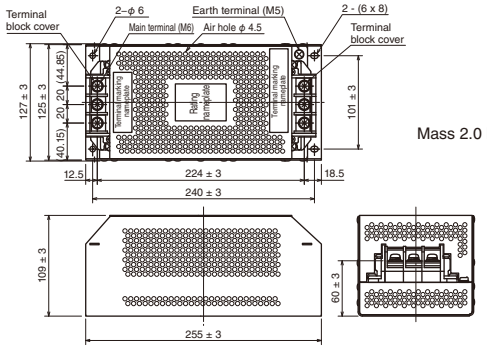

Mass 2.0 kg

Figure 2: RNFMC1H-20, 40

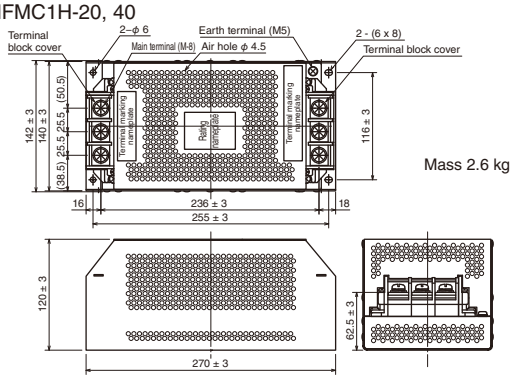

Mass 2.6 kg

Figure 3: RNFMCH1-20, 40

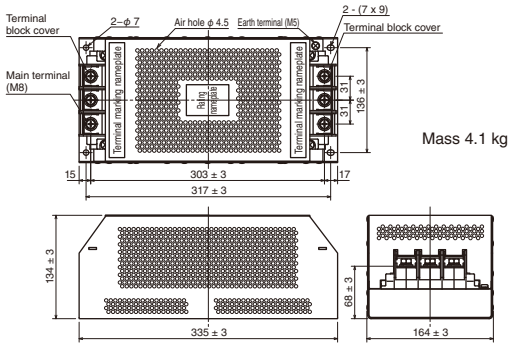

Mass 4.1 kg

Figure 4: RNFMC2H-20, 40

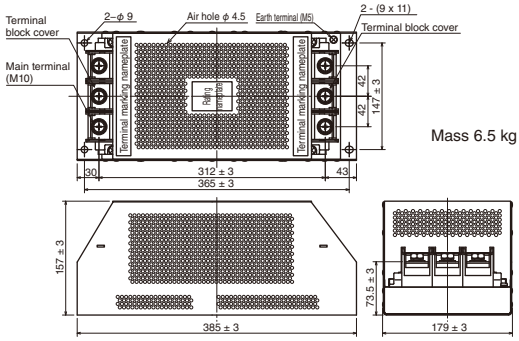

Mass 6.5 kg

Figure 5: RNFMC3H-20, 40

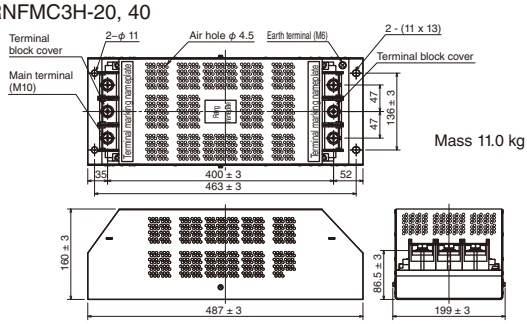

Mass 11.0 kg

Figure 6: RNFMC4H-20, 40

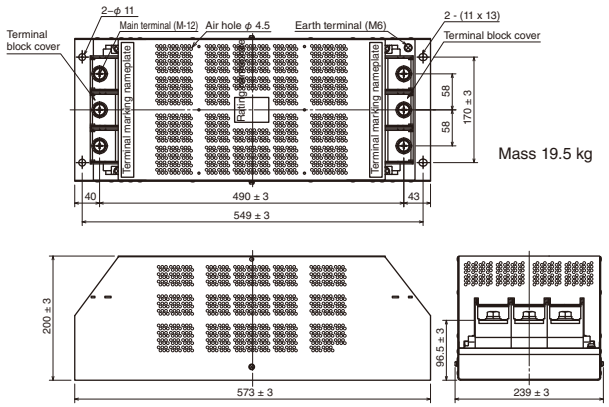

Mass 19.5 kg

Figure 7: RNFMC5H, 6H-20, 40

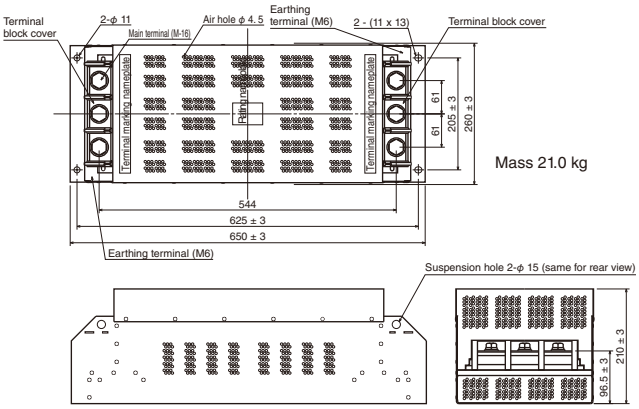

Mass 21.0 kg

Figure 8: RNFMC9H-40

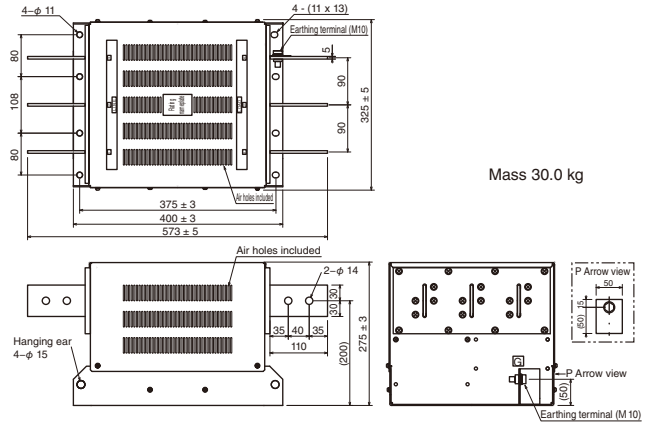

Mass 30.0 kg

Figure 9: RNFMC12H-40

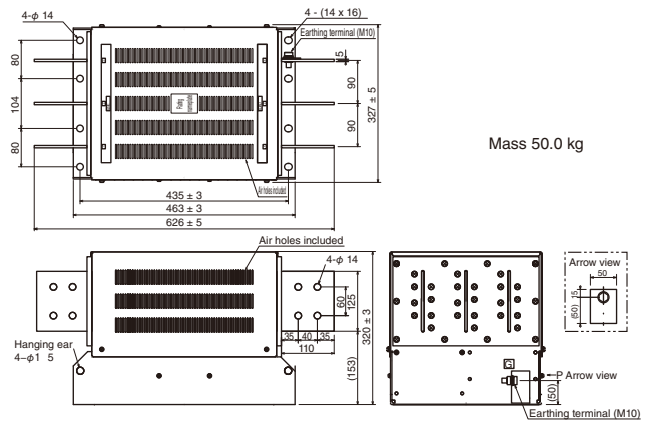

Mass 50.0 kg

Noise Suppression Filters
RNFHA series (High-performance type)

■ Features

- The best noise damping performance. (compared to our other products)
- Reliably prevents noise from inverters and such.
- Combining with another power filter for output circuits further improves damping performance.
- We used our company's proprietary technology to make it smaller and lighter.
- CE marking (low voltage command 2014/35/EU applicable)
- Compatible with revised Chinese version

■ Type number nomenclature

RNFHA □□ - □□

Series class

Series class	Code
Power filter for input circuit High-performance type	RNFHA

(Note) For single phase input, leave the intermediate phase open.

Rated voltage

Rated voltage [V]	Code
200-250	20
380-440	40

Rated current

Rated voltage (V)	Code
5	05
10	10
20	20
30	30
50	50
75	75
100	1H

D2

■ Ratings and specifications, types, product codes

Type (=Product code)	No. of phases	Rated voltage [V]	Rated current [A]	Dielectric strength [V] (Line-Ground)	Leakage current [mA]	Voltage decrease [V]	Operational ambient temperature [°C]	Outline drawing
RNFHA05-20	Three phase	200-250	5	2,000 AC one min.	One-phase grounding 4.5 or less	1.5 or less	-25 - +50	Fig. 1
RNFHA10-20			10					Fig. 2
RNFHA20-20			20					Fig. 3
RNFHA30-20			30					Fig. 4
RNFHA50-20			50					Fig. 5
RNFHA75-20			75					Fig. 6
RNFHA1H-20			100					Fig. 7
RNFHA05-40	Three phase	380-440	5	2,000 AC one min.	Neutral point grounding 3.5 or less One-phase grounding 24 or less	1.5 or less	-25 - +50	Fig. 1
RNFHA10-40			10					Fig. 2
RNFHA20-40			20					Fig. 3
RNFHA30-40			30					Fig. 4
RNFHA50-40			50					Fig. 5
RNFHA75-40			75					Fig. 6
RNFHA1H-40			100					Fig. 7

■ Circuit configuration

200 - 250 V products	380 - 440 V products
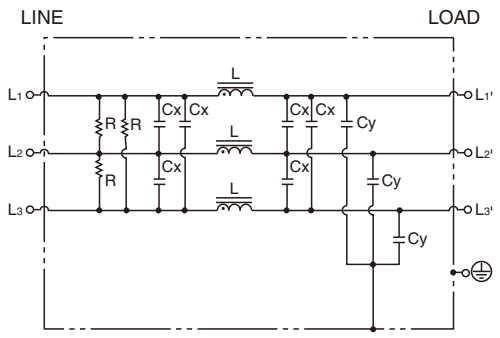	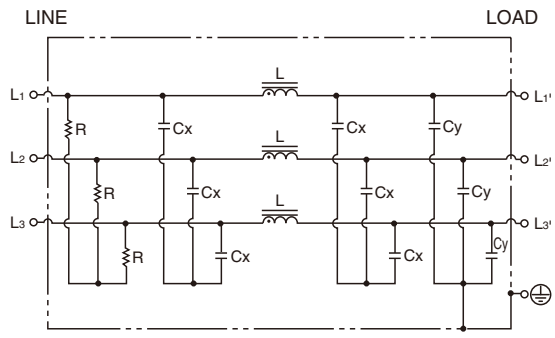

■ Noise damping performance

●Dynamic characteristics (representative example: Combining RNFHA05-20 and RNFTS05-20 for output circuits produces the noise terminal voltage damping effect of our company's inverters)

RNFHA (for input circuit) only	RNFHA + RNFTS (combination of input circuit/output circuit types)
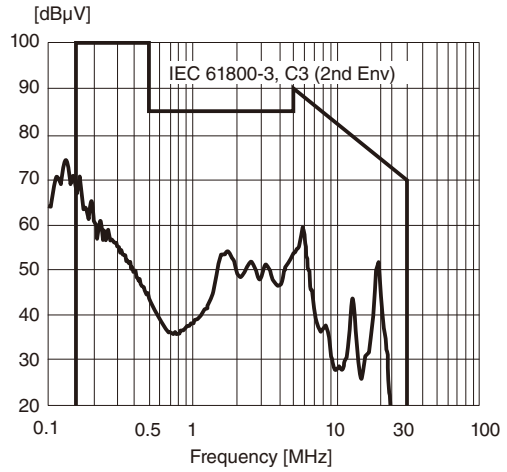	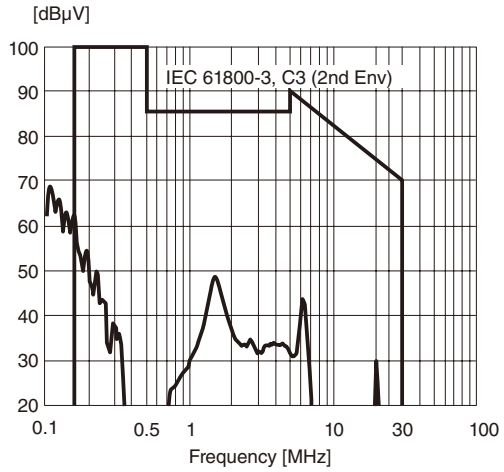

●Static characteristics (representative example: RNFHA05-20)

Normal mode	Common mode
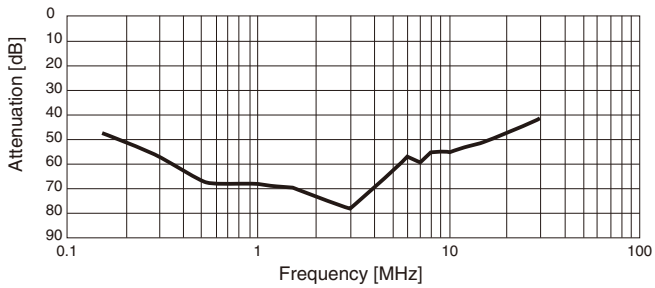	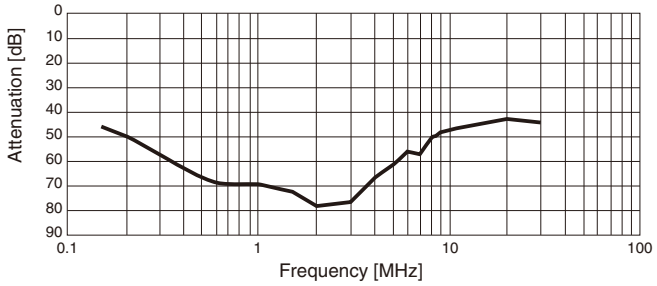

Noise Suppression Filters
RNFHA series (High-performance type)

■ Outline drawing (Unit: mm)

Figure 1: RNFHA05-20, 40

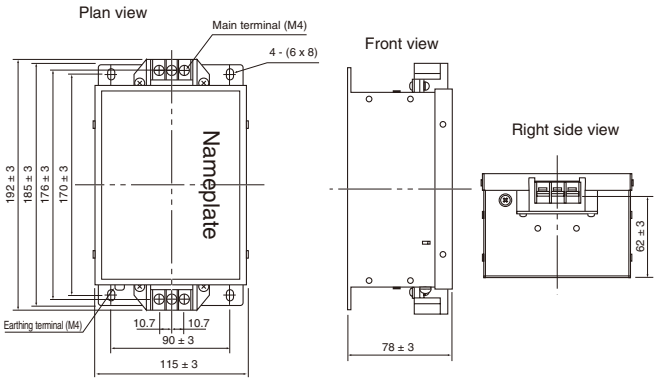

Type	Mass (kg)
RNFHA05-20, 40	1.4

Figure 2: RNFHA10-20, 40

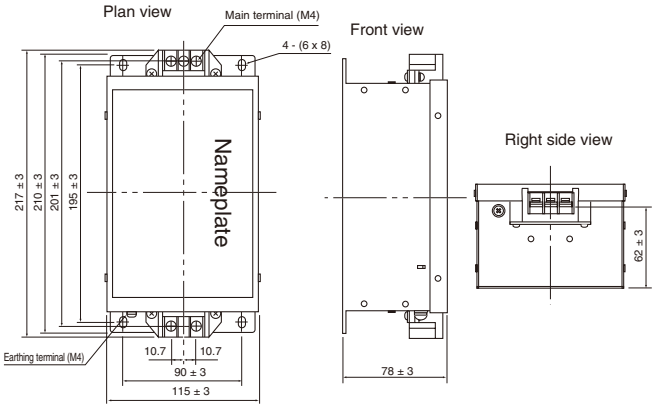

Type	Mass (kg)
RNFHA10-20, 40	1.8

Figure 3: RNFHA20-20, 40

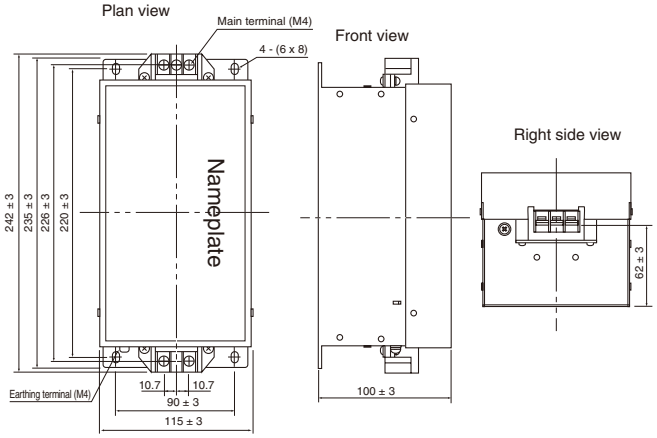

Type	Mass (kg)
RNFHA20-20, 40	2.4

Figure 4: RNFHA30-20, 40

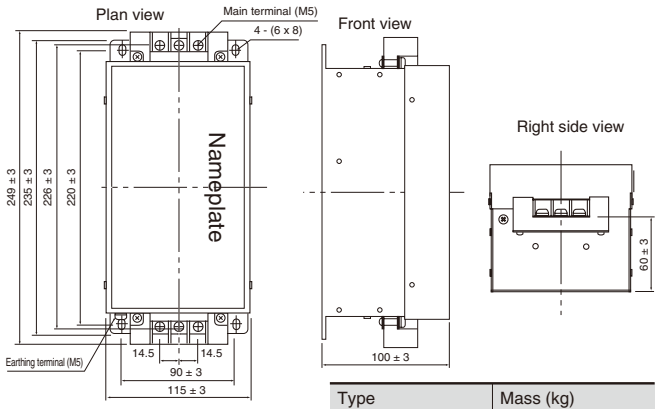

Type	Mass (kg)
RNFHA30-20, 40	2.4

Figure 5: RNFHA50-20, 40

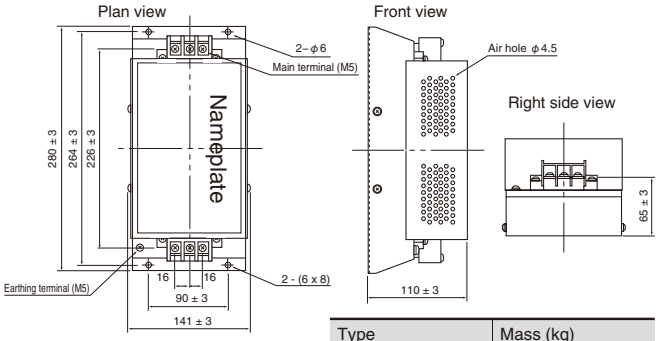

Type	Mass (kg)
RNFHA50-20, 40	3.2

Figure 6: RNFHA75-20, 40

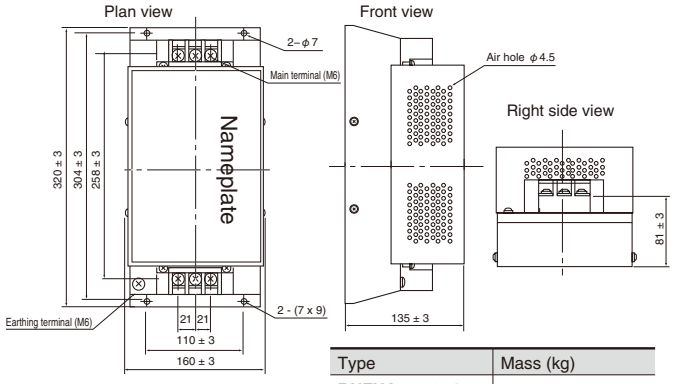

Type	Mass (kg)
RNFHA75-20, 40	4.5

Figure 7: RNFHA1H-20, 40

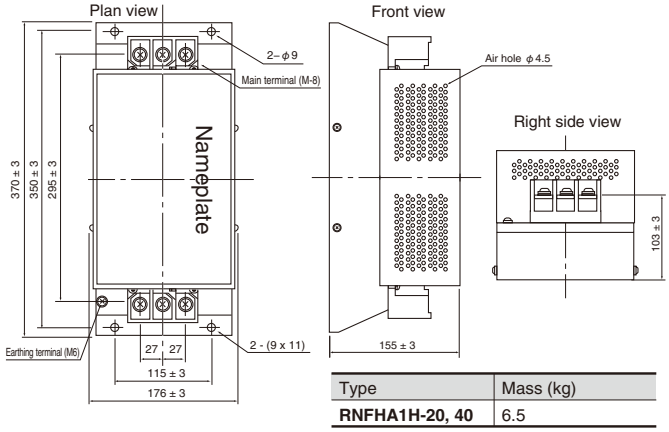

Type	Mass (kg)
RNFHA1H-20, 40	6.5

Noise Suppression Filters
RNFTS, RNFMS series

■ Features

- Prevents noise from inverter output lines.
- Combining with another power filter for input circuits offers excellent damping performance.
- The external terminal has the same durable structure as the field-wiring terminal.
- The RNFTS product category has products with a resin case model integrated with the terminal block.
- CE marking (low voltage command 2014/35/EU applicable)
- Compatible with revised Chinese version

■ Type number nomenclature

RNF□S □□ - □□

Series class

Series class	Code
For output circuit Power filter (Resin case)	RNFTS
For output circuit Power filter (Metal case)	RNFMS

(Note) For single phase input, leave the intermediate phase open.

Rated voltage

Rated voltage [V]	Code
250	20
480	40

Rated current

Rated voltage (V)	Code
40	40
45	45
50	50
60	60
75	75
90	90
100	1H

■ Ratings and specifications, types, product codes

Type (=Product code)	No. of phases	Rated voltage [V]	Rated current [A]	Dielectric strength (V) (Line-Ground)	Voltage decrease [V]	Operational ambient temperature [°C]	Outline drawing
RNFTS50-20	Three phase	250	50	2,000 AC one min.	1.0 or less	–10 - +50	Fig. 1
RNFMS60-20			60				Fig. 2
RNFMS75-20			75				
RNFMS90-20			90				
RNFTS40-40	Three phase	480	40	2,500 AC one min.	1.0 or less	–10 - +50	Fig. 1
RNFTS45-40			45				
RNFMS75-40			75				Fig. 2
RNFMS1H-40			100				

(Note) For the 5-30A model, refer to the RNFDS product category on Page D2-44.

Noise Suppression Filters
RNFTS, RNFMS series

■ Circuit configuration

RNFTS series

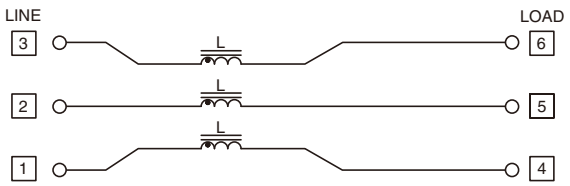

RNFMS series

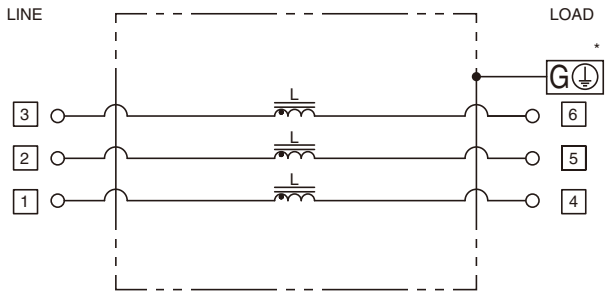

* It has no dedicated earth terminal; however, use the mounting hole to ground the case.

■ Outline drawing (Unit: mm)

Figure 1: RNFTS50-20, 40, 45-40

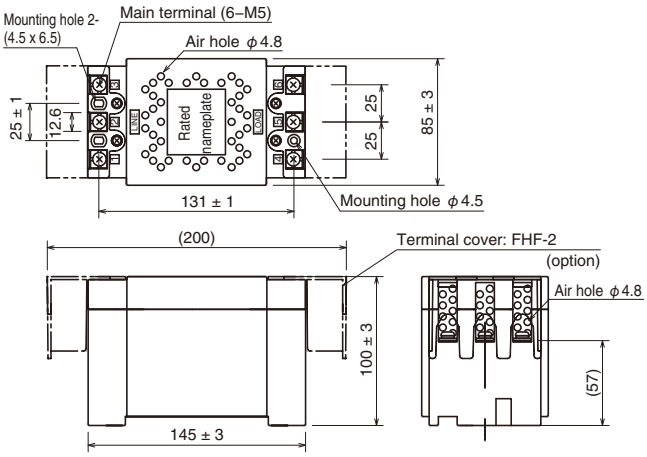

Type	Mass (kg)
RNFTS50-20	1.6
RNFTS40-40	
RNFTS45-40	

Figure 2: RNFMS60, 75, 90-20, 75, 1H-40

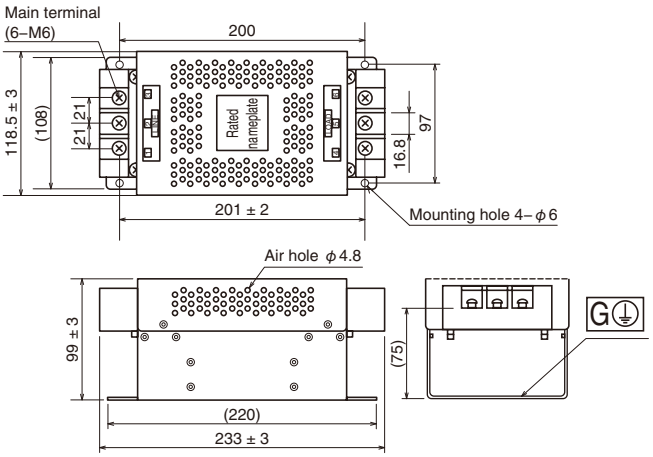

Type	Mass (kg)	Type	Mass (kg)
RNFMS60-20	2.2	**RNFMS75-40**	2.6
RNFMS75-20		**RNFMS1H-40**	
RNFMS90-20			

■ Characteristics

- The damping circuit structure optimized to handle APR noise allows for excellent damping performance.
- Besides the APR, it also has a noise damping effect as a single-phase/three-phase device noise filter.
- Because there is little current leakage, there is a very low risk of malfunctions of the earth leakage circuit breaker.
- A wide range of products is available.
- For the APR input side (power supply side) circuit.
- CE marking (low voltage command 2014/35/EU applicable)
- Compatible with revised Chinese version

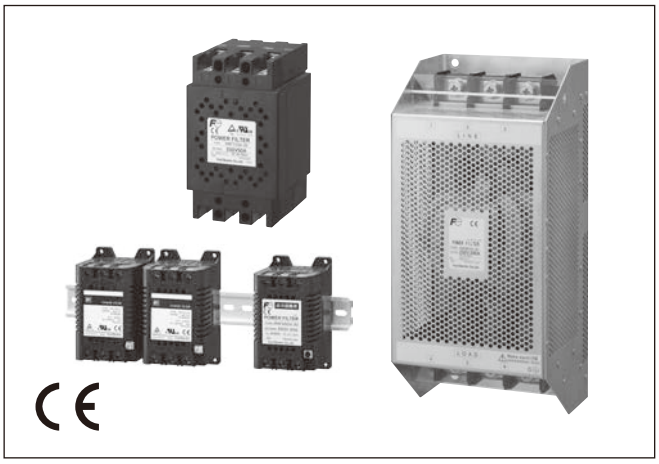

■ Type number nomenclature

RNF□□ □□ - □□

Series class

Series class	Code
Single-phase resin case power filter	RNFT1
Single-phase metal case power filter	RNFM1
Three-phase resin case power filter	RNFTD, RNFTC
Three-phase metal case power filter	RNFMC

Rated voltage

Rated voltage (V)	Code
250	20
480	40

Rated current

Rated current (A)	Code	Rated current (A)	Code
6	06	150	H1
10	10	200	2H
20	20	250	H2
25	25	300	3H
30	30	350	H3
50	50	400	4H
60	60	450	H4
75	75	500	5H
100	1H	600	6H

■ Ratings and specifications, types, product codes, delivery time

For single phase

Type (=Product code)	Rated voltage (V)	Rated current (A)	Dielectric strength (V) (Line-Ground)	Leakage current (mA)	Voltage decrease (V)	Operational ambient temperature (℃)
RNFT125-20	250	25	2,000 VAC for 1 minute	0.5 or less	1.0 or less	–10 - +50
RNFT150-20		50				
RNFM160-20		60		0.8 or less		
RNFM11H-20		100				
RNFM1H1-20		150		2.0 or less		
RNFM1H2-20		250				
RNFM1H3-20		350				
RNFM1H4-20		450		5.5 or less		
RNFM16H-20		600				
RNFT125-40	480	25	2,500 V AC for 1 minute	2.1 or less	1.0 or less	–10 - +50
RNFT150-40		50				
RNFM160-40		60		3.0 or less		
RNFM11H-40		100				
RNFM1H1-40		150		6.5 or less		
RNFM1H2-40		250				
RNFM1H3-40		350				
RNFM1H4-40		450		9.5 or less		
RNFM16H-40		600				

Noise Suppression Filters
RNFT, RNFM series

●For three phase

Type (=Product code)	Rated voltage (V)	Rated current (A)	Dielectric strength (V) (Line-Ground)	Leakage current (mA)	Voltage decrease (V)	Operational ambient temperature (℃)
RNFTD06-20	250	6	2,000 VAC for 1 minute	One-phase grounding 1.0 or less	1.0 or less	–10 - +50
RNFTD10-20		10				
RNFTD20-20		20				
RNFTD30-20		30		One-phase grounding 1.5 or less		
RNFTC50-20		50		One-phase grounding 1.0 or less		
RNFMC60-20		60		One-phase grounding 1.5 or less		
RNFMC75-20		75				
RNFMC1H-20		100				
RNFMCH1-20		150		One-phase grounding 3.0 or less		
RNFMC2H-20		200				
RNFMC3H-20		300				
RNFMC4H-20		400				
RNFMC5H-20		500		One-phase grounding 9.5 or less		
RNFMC6H-20		600				
RNFTD06-40	480	6	2000 V AC for one minute	Neutral point grounding 1.0 or less	1.0 or less	–10 - +50
RNFTD10-40		10				
RNFTD20-40		20				
RNFTD30-40		30		Neutral point grounding 2.0 or less		
RNFTC50-40		50	2,500 V AC for 1 minute	Neutral point grounding 1.0 or less		
RNFMC75-40		75		Neutral point grounding 1.0 or less One-phase grounding 9.0 or less		
RNFMC1H-40		100				
RNFMCH1-40		150		Neutral point grounding 2.1 or less One-phase grounding 19.0 or less		
RNFMC2H-40		200				
RNFMC3H-40		300				
RNFMC4H-40		400				
RNFMC5H-40		500		Neutral point grounding 9.9 or less		
RNFMC6H-40		600				

■ Outline dimensions (unit: mm) and other

Number of phases	Type		Case materials	Outline dimensions (mm)			Main terminal screw size	Mass (kg)	Terminal cover
				Width	Longitudinal dimensions (with cover on)	Depth			
Single-phase	**RNFT125-20, 40**		Resin case	75	135 (190)	91	M5	1.0	Option FHF-2
	RNFT150-20, 40			85	146 (200)	100	M5	1.6	
	RNFM160-20, 40	**RNFM11H-20, 40**	Metal	121.5	233	99	M6	2.6	
	RNFM1H1-20, 40			164	335	134	M8	3.2	
	RNFM1H2-20, 40			199	487	160	M10	10.0	
	RNFM1H3-20, 40			239	573	200	M12	15.0	
	RNFM1H4-20, 40	**RNFM16H-20, 40**		239	573	200	M16	18.0	
Three-phase	**RNFTD06-20, 40**	**RNFTD10-20, 40**	Resin case	64	116	74	M4	0.5	
	RNFTD20-20, 40	**RNFTD30-20, 40**							
	RNFTC50-20, 40			85	146 (200)	100	M5	1.6	Option FHF-2
	RNFMC60-20	**RNFMC75-20, 40**	Metal	127	255	109	M6	2.0	
	RNFMC1H-20, 40			142	270	120	M8	2.6	
	RNFMCH1-20, 40			164	335	134	M8	4.1	
	RNFMC2H-20, 40			179	385	157	M10	6.5	
	RNFMC3H-20, 40			199	487	160	M10	11.0	
	RNFMC4H-20, 40			239	573	200	M12	19.5	
	RNFMC5H-20, 40			260	650	210	M16	21.0	
	RNFMC6H-20, 40								

■ Our company's inverters and applied power filters (representative example)

●PowePower filter for input circuit (standard type, rail mounting type)

Circuit voltage	Inverter calibre [kW]	Power filter for input circuit (standard type) DC reactor present	Power filter for input circuit (standard type) No DC reactor	Power filter for output circuit Unrelated to presence of a DC reactor
Three phase 200 V 50/60 Hz	0.2	RNFTD06-20	RNFTD06-20	RNFDS05-20
	0.4			
	0.75			
	1.5	RNFTD10-20	RNFTD10-20	RNFDS10-20
	2.2		RNFTD20-20	RNFDS20-20
	3.7	RNFTD20-20	RNFTD30-20	
	5.5	RNFTD30-20	RNFTC50-20, RNFMC60-20	RNFDS30-20
	7.5			RNFTS50-20, RNFMS60-20
	11	RNFTC50-20	RNFMC75-20	
	15	RNFMC60-20	RNFMC1H-20	RNFMS75-20
	18.5	RNFMC75-20		RNFMS90-20
	22	RNFMC1H-20	RNFMCH1-20	
	30	RNFMCH1-20	RNFMC2H-20	–
	37			
	45	RNFMC2H-20	RNFMC3H-20	
	55	RNFMC3H-20		
	75		–	
	90	RNFMC4H-20		
	110	RNFMC5H-20		
Three phase 400 V 50/60 Hz	0.4	RNFTD06-40	RNFTD06-40	RNFDS10-40
	0.75			
	1.5			
	2.2		RNFTD10-40	
	3.7	RNFTD10-40	RNFTD20-40	
	5.5	RNFTD20-40		RNFDS20-40
	7.5		RNFTD30-40	
	11	RNFTD30-40	RNFTC50-40	RNFDS30-40
	15	RNFTD30-40		RNFTS40-40
	18.5	RNFTC50-40	RNFMC75-40	
	22			RNFTS45-40
	30	RNFMC75-40	RNFMC1H-40	RNFMS75-40
	37			
	45	RNFMC1H-40	RNFMCH1-40	RNFMS1H-40
	55	RNFMCH1-40		–
	75		–	
	90	RNFMC2H-40		
	110	RNFMC3H-40		
	132			
	160			
	200	RNFMC4H-40		
	220			
	280	RNFMC5H-40		
	315	RNFMC6H-40		
	355	RNFMC9H-40		
	400			
	450			
	500			
	560	RNFMC12H-40		
	630			

(Note 1) The power supply conditions are based on a standard of 50 [Hz], 200 [V] (400 [V]).
After confirming the rated current of the inverter being used, select the rated current and voltage.

Noise Suppression Filters
Application and Mounting Methods

●Power filter for input circuit (high-performance type)

Circuit voltage	Inverter calibre [kW]	Power filter for input circuit (high-performance type) DC reactor present	Power filter for input circuit (high-performance type) No DC reactor	Power filter for output circuit Unrelated to presence of a DC reactor
Three phase 200 V 50/60 Hz	0.2	RNFHA05-20	RNFHA05-20	RNFDS05-20
	0.4			
	0.75		RNFHA10-20	
	1.5	RNFHA10-20	RNFHA20-20	RNFDS10-20
	2.2			RNFDS20-20
	3.7	RNFHA20-20	RNFHA30-20	
	5.5		RNFHA50-20	RNFDS30-20
	7.5	RNFHA30-20	RNFHA75-20	RNFTS50-20
	11	RNFHA50-20	RNFHA1H-20	
	15	RNFHA75-20		RNFMS60-20
	18.5		–	RNFMS75-20
	22	RNFHA1H-20		RNFMS90-20
Three phase 400 V 50/60 Hz	0.4	RNFHA05-40	RNFHA05-40	RNFDS10-40
	0.75			
	1.5		RNFHA10-40	
	2.2			
	3.7	RNFHA10-40	RNFHA20-40	
	5.5		RNFHA30-40	RNFDS20-40
	7.5	RNFHA20-40		
	11		RNFHA50-40	RNFDS30-40
	15	RNFHA30-40	RNFHA75-40	RNFDS30-40
	18.5	RNFHA50-40		RNFTS40-40
	22			RNFTS45-40
	30	RNFHA75-40	RNFHA1H-40	RNFMS75-40
	37		–	
	45	RNFHA1H-40		RNFMS1H-40
	55			–

(Note 1) The power supply conditions are based on a standard of 50 [Hz], 200 [V] (400 [V]). After confirming the rated current of the inverter being used, select the rated current and voltage.

D2

■ Our company's servomotors and applied power filters

●PowePower filter for input circuit (standard type, rail mounting type)

Power supply voltage	FALDIC product category servo amp Capacity (kW)	FALDIC-α type	FALDIC-β type	Power filter type
Three phase 200 V	0.05	RYS500S3-□□□	RYB500S3-VBC	RNFTD06-20
	0.1	RYS101S3-□□□	RYB101S3-VBC	
	0.2	RYS201S3-□□□	RYB201S3-VBC	
	0.4	RYS401S3-□□□	RYB401S3-VBC	RNFTD10-20
	0.75	RYS751S3-□□□	RYB751S3-VBC	RNFTD20-20
	1.0	RYS102S3-□□□	–	
	1.5	RYS152S3-□□□		
	2.0	RYS202S3-□□□		
	3.0	RYS302S3-□□□	–	RNFTD30-20
	4.0	RYS402S3-□□□	–	RNFTC50-20
	5.0	RYS502S3-□□□		
Single-phase 100 V	0.05	RYS500S3-□□□6	RYB500S3-VBC6	RNFTD06-20
	0.1	RYS101S3-□□□6	RYB101S3-VBC6	
	0.2	RYS201S3-□□□6	RYB201S3-VBC6	RNFTD10-20
	0.375	RYS371S3-VVX6	–	RNFTD20-20

●Power filter for input circuit (high-performance type)

Power supply voltage	FALDIC product category servo amp Capacity (kW)	FALDIC-α type	FALDIC-β type	Power filter type
Three phase 200 V	0.05	RYS500S3-□□□	RYB500S3-VBC	RNFHA05-20
	0.1	RYS101S3-□□□	RYB101S3-VBC	
	0.2	RYS201S3-□□□	RYB201S3-VBC	
	0.4	RYS401S3-□□□	RYB401S3-VBC	RNFHA10-20
	0.75	RYS751S3-□□□	RYB751S3-VBC	RNFHA20-20
	1.0	RYS102S3-□□□	–	
	1.5	RYS152S3-□□□		
	2.0	RYS202S3-□□□		
	3.0	RYS302S3-□□□	–	RNFHA30-20
	4.0	RYS402S3-□□□	–	RNFHA50-20
	5.0	RYS502S3-□□□		
Single-phase 100 V	0.05	RYS500S3-□□□6	RYB500S3-VBC6	RNFHA05-20
	0.1	RYS101S3-□□□6	RYB101S3-VBC6	
	0.2	RYS201S3-□□□6	RYB201S3-VBC6	RNFHA10-20
	0.375	RYS371S3-VVX6	–	RNFHA20-20

■ Mounting method

- Connect the earth wiring to the earth terminal according to the display board.
- Be sure to ground the power filter for input circuit.
- The power filter for output circuit RNFMS product category (a metallic case model) has no dedicated earth terminal; however, be sure to ground the case using the mounting hole.
- When the earth terminal is wired to the ground, use an electric wire of 2 ㎟ or more for the shortest distance to reduce the grounding resistance.
- Keep the wiring length between the power filter and the inverter (wires b, c) and the power filter and motor (wire d) as short as possible.
- Keep the power filter for input circuit input line (wire a) and inverter input/output lines (wires b, c) as far apart as possible.
- Keep the power filter output line for output circuit (wire d) and the inverter input/output line (wires b, c) as far apart as possible.

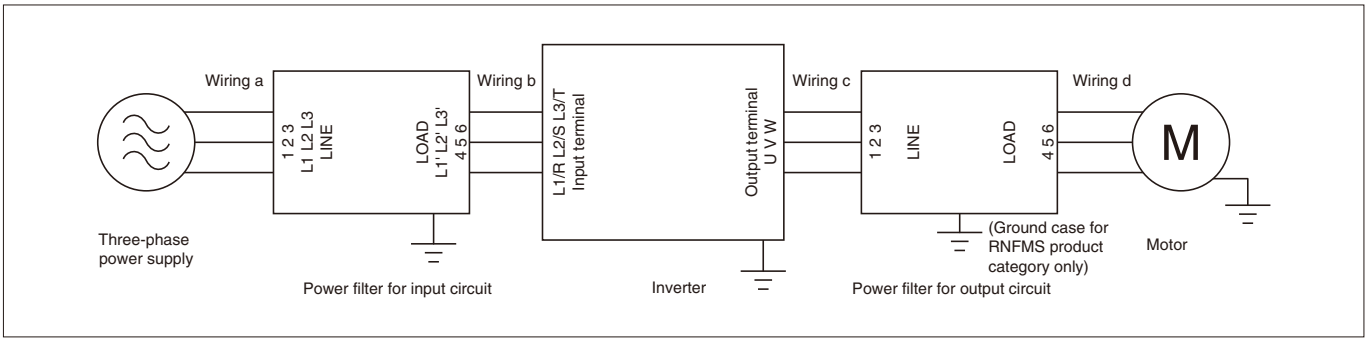

■ Wiring method

●Power filter for input circuit (standard type)

Type	Main terminal			Type	Earth terminal			Optional products
	Connectable crimp terminal	Terminal screw	Tightening torque [N/m]		Connectable crimp terminal	Terminal screw	Tightening torque [N/m]	(sold separately)
RNFTD06-20	R1.25-4 - R5.5-4	M4	1.2 - 1.8	**RNFTD06-20**	R1.25-4 - R5.5-4	M4	1.2 - 1.8	
RNFTD10-20				**RNFTD10-20**				
RNFTD20-20				**RNFTD20-20**				
RNFTD30-20				**RNFTD30-20**				
RNFTC50-20	R1.25-5 - R14-5	M5	2.0 - 2.8	**RNFTC50-20**				Terminal cover: FHF-2
RNFMC60-20	R2-6 - R22-6	M6	2.5 - 3.75	**RNFMC60-20**	R2-5 - R14-5	M5	2.0 - 2.8	
RNFMC75-20				**RNFMC75-20**				
RNFMC1H-20	R2-8 - R38-8	M8	6.0 - 9.0	**RNFMC1H-20**				
RNFMCH1-20	R2-8 - R60-8			**RNFMCH1-20**	R2-5 - 22-5			
RNFMC2H-20	2-10 - R100-10	M10	10.0 - 15.0	**RNFMC2H-20**				
RNFMC3H-20	2-10 - R150-10			**RNFMC3H-20**	R2-6 - R22-6	M6	2.5 - 3.75	
RNFMC4H-20	2-12 - R200-12	M12	14.0 - 21.0	**RNFMC4H-20**				
RNFMC5H-20	2-16 - R325-16	M16		**RNFMC5H-20**	R2-6 - 38-6			
RNFMC6H-20				**RNFMC6H-20**				
RNFTD06-40	R1.25-4 - R5.5-4	M4	1.2 - 1.8	**RNFTD06-40**	R1.25-4 - R5.5-4	M4	1.2 - 1.8	
RNFTD10-40				**RNFTD10-40**				
RNFTD20-40				**RNFTD20-40**				
RNFTD30-40				**RNFTD30-40**				
RNFTC50-40	R1.25-5 - R14-5	M5	2.0 - 2.8	**RNFTC50-40**				Terminal cover: FHF-2
RNFMC75-40	R2-6 - R22-6	M6	2.5 - 3.75	**RNFMC75-40**	R2-5 - R14-5	M5	2.0 - 2.8	
RNFMC1H-40	R2-8 - R38-8	M8	6.0 - 9.0	**RNFMC1H-40**				
RNFMCH1-40	R2-8 - R60-8			**RNFMCH1-40**	R2-5 - 22-5			
RNFMC2H-40	2-10 - R100-10	M10	10.0 - 15.0	**RNFMC2H-40**				
RNFMC3H-40	2-10 - R150-10			**RNFMC3H-40**	R2-6 - R22-6	M6	2.5 - 3.75	
RNFMC4H-40	2-12 - R200-12	M12	14.0 - 21.0	**RNFMC4H-40**				
RNFMC5H-40	2-16 - R325-16	M16		**RNFMC5H-40**	R2-6 - 38-6			
RNFMC6H-40				**RNFMC6H-40**				
RNFMC9H-40	2-12 - 325-12	2-M12 (Note 3)	40 - 48	**RNFMC9H-40**	2-10 - R100-10	M10	10 - 15	
RNFMC12H-40		4-M12 (Note 3)		**RNFMC12H-40**				

(Note) 1. The terminal cover is an insertion type, so mount by inserting into the power filter hole.
2. (Symbol explanation)
R…JIS C 2805 Crimp contact for copper wire
2-10, 2-12, 2-16, 22-5, 38-6, and 325-12 are non-JIS products.
3. Display the recommended screw size. Not included.

Noise Suppression Filters
Application and Mounting Methods, Dangers/Warnings

●Power filter for input circuit (high-performance type)

Type	Main terminal			Type	Earth terminal		
	Connectable crimp terminal	Terminal screw	Tightening torque [N/m]		Connectable crimp terminal	Terminal screw	Tightening torque [N/m]
RNFHA05-20	R1.25-4 - R5.5-4	M4	1.2 - 1.8	**RNFHA05-20**	R1.25-4 - R5.5-4	M4	1.2 - 1.8
RNFHA10-20				**RNFHA10-20**			
RNFHA20-20				**RNFHA20-20**			
RNFHA30-20	R1.25-5 - R8-5	M5	2.0 - 2.4	**RNFHA30-20**	R1.25-5 - R8-5	M5	2.0 - 2.4
RNFHA50-20	R1.25-5 - R14-5			**RNFHA50-20**	R2-5 - R14-5		
RNFHA75-20	R2-6 - R22-6	M6	2.5 - 4.0	**RNFHA75-20**	R2-6 - R14-6	M6	2.5 - 4.0
RNFHA1H-20	R2-8 - R60-8	M8	9.0 - 10.0	**RNFHA1H-20**			
RNFHA05-40	R1.25-4 - R5.5-4	M4	1.2 - 1.8	**RNFHA05-40**	R1.25-4 - R5.5-4	M4	1.2 - 1.8
RNFHA10-40				**RNFHA10-40**			
RNFHA20-40				**RNFHA20-40**			
RNFHA30-40	R1.25-5 - R8-5	M5	2.0 - 2.4	**RNFHA30-40**	R1.25-5 - R8-5	M5	2.0 - 2.4
RNFHA50-40	R1.25-5 - R14-5			**RNFHA50-40**	R2-5 - R14-5		
RNFHA75-40	R2-6 - R22-6	M6	2.5 - 4.0	**RNFHA75-40**	R2-6 - R14-6	M6	2.5 - 4.0
RNFHA1H-40	R2-8 - R60-8	M8	9.0 - 10.0	**RNFHA1H-40**			

(Symbol explanation)
R…JIS C 2805 Crimp contact for copper wire

●Power filter for output circuit

Type	Main terminal			Optional products (sold separately)
	Connectable crimp terminal	Terminal screw	Tightening torque [N/m]	
RNFDS05-20	R1.25-4 - R5.5-4	M4	1.2 - 1.8	
RNFDS10-20				
RNFDS20-20				
RNFDS30-20				
RNFTS50-20	R1.25-5 - R14-5	M5	2.0 - 2.8	Terminal cover: FHF-2
RNFMS60-20	R2-6 - R22-6	M6	4.0 - 4.5	–
RNFMS75-20	38-S6, 38-S5			
RNFMS90-20				
RNFDS10-40	R1.25-4 - R5.5-4	M4	1.2 - 1.8	
RNFDS20-40				
RNFDS30-40				
RNFTS40-40	R1.25-5 - R14-5	M5	2.0 - 2.8	Terminal cover: FHF-2
RNFTS45-40				
RNFMS75-40	R2-6 - R22-6	M6	4.0 - 4.5	–
RNFMS1H-40	38-S6, 38-S5			

(Note) The terminal cover is an insertion type, so mount by inserting into the power filter hole.
(Symbol explanation)
R…JIS C 2805 Crimp contact for copper wire
38-S6 and 38-S5 are non-JIS products.

●Crimp contact connection method

Mount the crimp contact according to the diagram below such that each pole is parallel.

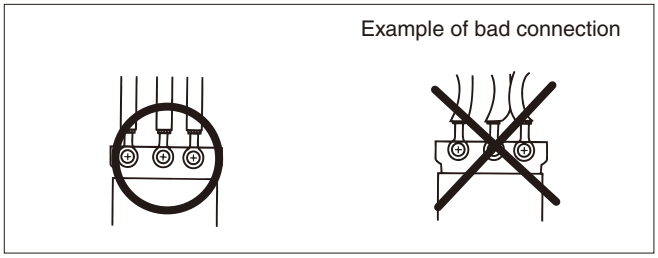

⚠Dangers

● Before mounting, unmounting, wiring and maintenance/inspection, be sure to turn off the power supply and check that the built-in capacitor is discharged.	There is a risk of electric shock/injury.
● Mounting, electrical construction and maintenance and inspection must be executed by a qualified person with specialized knowledge.	There is a risk of electric shock/injury.
● Absolutely do not touch an energized terminal section.	There is a risk of electric shock.
● Be sure to ground the earth terminal of the power filter for input circuit before the power is turned on.	There is a risk of electric shock.
● Be sure to ground the case of the power filter for output circuit RNFMS product category (a metallic case model) before the power is turned on. It has no dedicated earth terminal; however, use the mounting hole for grounding.	There is a risk of electric shock.
● Absolutely do not disassemble/modify the product.	Electric shocks/fires/injuries may be caused.

⚠CAUTION

● Do not use a damaged/deformed product.	Fires/injuries may be caused.
● Do not use the product under a use environment other than one specified in the Instruction Manual.	Failures may be caused.
● Do not use the product above its rating capacity.	Fires/failures may be caused.
● Select an electric wire appropriate to the applied voltage/rated thermal current and do not apply a torque other than the specified one when the wire is fastened.	Fires/failures may be caused.
● Do not touch the main unit while it is energized and right after it is stopped.	Burns may be caused.
● When an earth leakage circuit breaker is used in the power supply line, use one with an appropriate sensitive current.	Malfunctions of the earth leakage circuit breaker may occur.
● Prevent metal and other foreign objects from entering the product from a ventilation hole.	Fires/failures may be caused.
● Do not block the ventilation hole of the case for cooling.	Fires/failures may be caused.
● Do not use the power filter for input circuit at the output circuit side of an inverter.	Fires/failures may be caused.
● Do not apply large shocks to the power filter by dropping it, etc.	Failures may be caused.
● When the product is disposed, handle it as industrial waste.	

Features

- Has excellent noise damping performance.
- TRAFY effectively eliminates normal mode noise conducted between power lines, and common mode noise conducted between power lines and the ground.
- The entire unit is coated in insulating material, giving it high protection from electric shock.
  Terminal section electric shock protective cover included as standard accessory.
- Can be mounted to the 35 mm-width IEC standard rail.

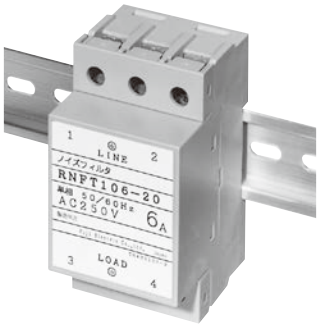

Type number nomenclature

RNF T 1 03 - 20

Basic type

Indicates built-in resin case

Indicates single-phase type

Rated voltage

Rated voltage [V]	Code
AC250	20

Rated current

Rated current (A)	Code
3	03
6	06
10	10

Ratings and specifications, types, product codes

Type (=Product code)	No. of phases	Rated voltage [V]	Rated current [A]	Dielectric strength (V) (Line-Ground)	Leakage current [mA]	Voltage decrease [V]	Operational ambient temperature [°C]	Outline drawing
RNFT103-20	Single-phase	250	3	2,000 AC one min.	1.0 or less	1.5 or less	–10 - +50	Fig. 1
RNFT106-20			6					
RNFT110-20			10					

Circuit configuration

RNFT

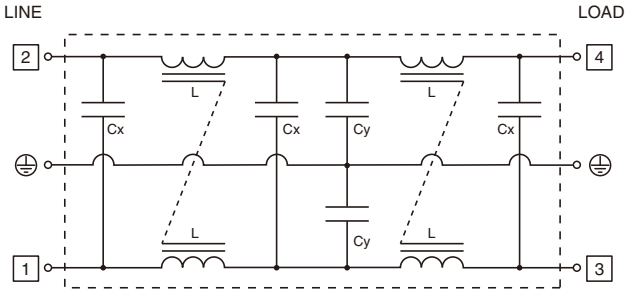

Noise Suppression Filters
RNFT series

■ Noise damping performance

●Normal mode

RNFT103-20, 106-20

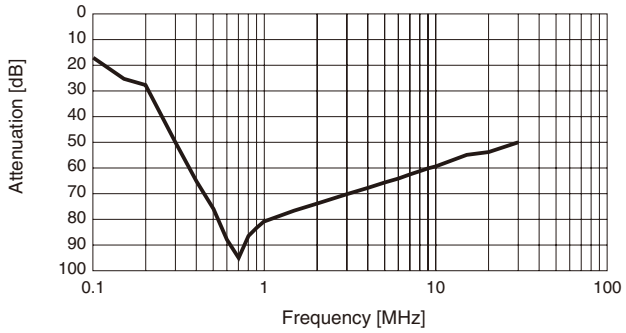

RNFT110-20

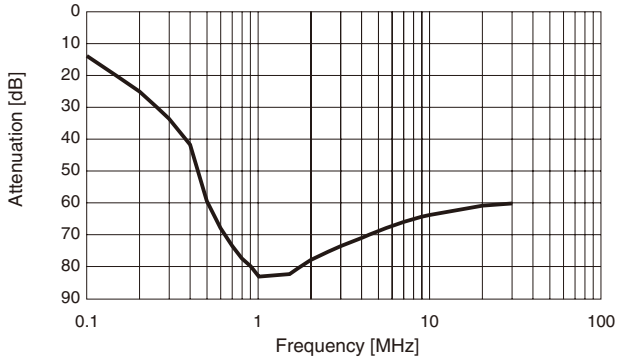

●Common mode

RNFT103-20, 106-20

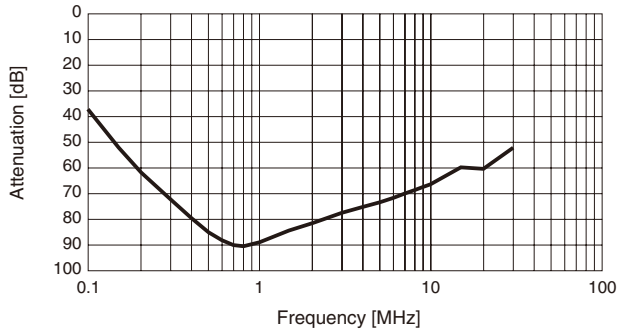

RNFT110-20

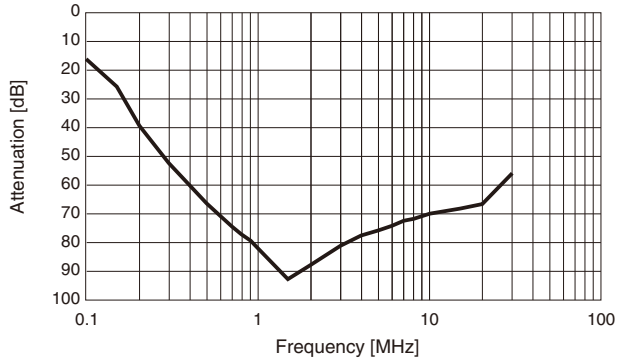

■ Outline drawing (Unit: mm)

Figure 1: RNFT103-20, 106-20,110-20

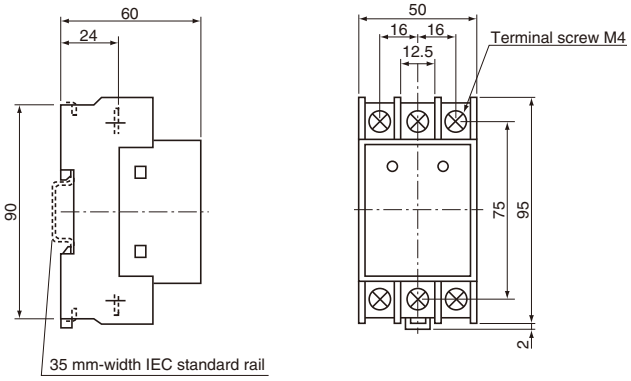

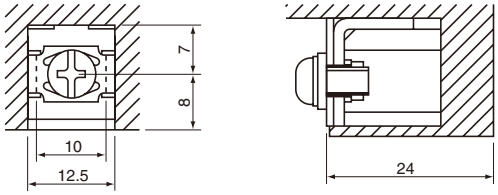

Terminal section details

Type	Mass (g)
RNFT103-20	220
RNFT106-20	220
RNFT110-20	220

Fuji Electric FA Components & Systems Co., Ltd.
Information subject to change without notice

Small and economical power transformers CU1F and CU3F series

■ Features

- A variety of models including single-phase and three-phase ones make it easy to select the model you require.
- The models for single phase come with electrostatic shielding as the standard configuration.
- JIS C 6436 (small power transformer for electric equipment), JIS C 3310 (power transformer for electric equipment) and JEC2200 (transformer) have been complied with, resulting in a design which ensures safety.
- All models have a grounding terminal.
- The terminal blocks have transparent covers attached, as the standard configuration.

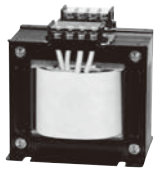

For Single Phase

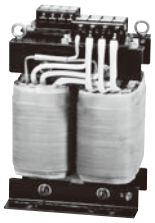

For Single Phase

CU1F Series

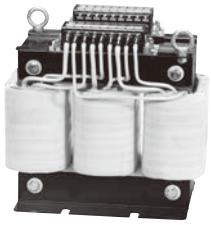

For Three Phases

CU3F Series

CU1F Series (Single phase)

■ Type and specifications

Transformation ratio Primary voltage/ secondary voltage Frequency	Rated capacity [VA]	Insulation type	Mass [kg]	Type
200V, 220V AC / 100V, 110V AC 50/60Hz	50	A	1.5	**CU1F-050-A2010**
	100	A	2.1	**CU1F-100-A2010**
	150	A	2.7	**CU1F-150-A2010**
	200	A	3.2	**CU1F-200-A2010**
	300	A	4.3	**CU1F-300-A2010**
	500	B	5.5	**CU1F-500-B2010**
	750	B	8.1	**CU1F-750-B2010**
	1k	B	10.3	**CU1F-1K-B2010**
	1.5k	B	15.0	**CU1F-1.5K-B2010**
	2k	B	19.0	**CU1F-2K-B2010**
	3k	B	27.7	**CU1F-3K-B2010**
	4k	H	30.5	**CU1F-4K-H2010**
	5k	H	38.3	**CU1F-5K-H2010**
180V, 200V, 220V AC / 100V, 110V AC	6k	H	45.7	**CU1F-6K-H2010**
	7.5k	H	49.6	**CU1F-7.5K-H2010**
	10k	H	63.7	**CU1F-10K-H2010**

Control Power Transformers
CU1F, CU3F

■ Type and specifications

Transformation ratio Primary voltage/ secondary voltage Frequency	Rated capacity [VA]	Insulation type	Mass [kg]	Type
380V, 400V, 440V AC / 100V, 110V AC 50/60Hz	50	A	1.5	**CU1F-050-A4010**
	100	A	2.1	**CU1F-100-A4010**
	150	A	2.8	**CU1F-150-A4010**
	200	A	3.5	**CU1F-200-A4010**
	300	A	4.3	**CU1F-300-A4010**
	500	B	5.5	**CU1F-500-B4010**
	750	B	8.1	**CU1F-750-B4010**
	1k	B	10.5	**CU1F-1K-B4010**
	1.5k	B	15.5	**CU1F-1.5K-B4010**
	2k	B	19.5	**CU1F-2K-B4010**
	3k	B	28.0	**CU1F-3K-B4010**
	4k	H	30.5	**CU1F-4K-H4010**
	5k	H	36.8	**CU1F-5K-H4010**
	6k	H	44.1	**CU1F-6K-H4010**
	7.5k	H	49.4	**CU1F-7.5K-H4010**
	10k	H	63.8	**CU1F-10K-H4010**
380V, 400V, 440V AC / 200V, 220V AC 50/60Hz	50	A	1.5	**CU1F-050-A4020**
	100	A	2.1	**CU1F-100-A4020**
	150	A	2.8	**CU1F-150-A4020**
	200	A	3.5	**CU1F-200-A4020**
	300	A	4.3	**CU1F-300-A4020**
	500	B	5.5	**CU1F-500-B4020**
	750	B	8.1	**CU1F-750-B4020**
	1k	B	10.7	**CU1F-1K-B4020**
	1.5k	B	15.0	**CU1F-1.5K-B4020**
	2k	B	19.5	**CU1F-2K-B4020**
	3k	B	27.9	**CU1F-3K-B4020**
	4k	H	30.5	**CU1F-4K-H4020**
	5k	H	37.3	**CU1F-5K-H4020**
	6k	H	44.0	**CU1F-6K-H4020**
	7.5k	H	49.4	**CU1F-7.5K-H4020**
	10k	H	63.8	**CU1F-10K-H4020**
100V, 110V AC / 100V, 110V AC 50/60Hz	50	A	1.5	**CU1F-050-A1010**
	100	A	2.1	**CU1F-100-A1010**
	200	A	3.1	**CU1F-200-A1010**
	300	A	4.3	**CU1F-300-A1010**
	500	B	5.5	**CU1F-500-B1010**
	1k	B	10.6	**CU1F-1K-B1010**
	1.5k	B	14.5	**CU1F-1.5K-B1010**
	2k	B	20.0	**CU1F-2K-B1010**
	3k	B	27.7	**CU1F-3K-B1010**
200V, 220V AC / 200V, 220V AC 50/60Hz	50	A	1.5	**CU1F-050-A2020**
	100	A	2.1	**CU1F-100-A2020**
	200	A	3.6	**CU1F-200-A2020**
	300	A	4.3	**CU1F-300-A2020**
	500	B	5.5	**CU1F-500-B2020**
	1k	B	10.7	**CU1F-1K-B2020**
	1.5k	B	15.0	**CU1F-1.5K-B2020**
	2k	B	20.0	**CU1F-2K-B2020**
	3k	B	27.3	**CU1F-3K-B2020**
100V, 110V AC / 24V AC 50/60Hz	48	A	1.5	**CU1F-048-A1002**
	72	A	2.1	**CU1F-072-A1002**
	120	A	2.7	**CU1F-120-A1002**
	240	A	4.1	**CU1F-240-A1002**
	360	A	4.8	**CU1F-360-A1002**
	480	B	6.0	**CU1F-480-B1002**
200V, 220V AC / 24V AC 50/60Hz	48	A	1.5	**CU1F-048-A2002**
	72	A	2.1	**CU1F-072-A2002**
	120	A	2.7	**CU1F-120-A2002**
	240	A	4.1	**CU1F-240-A2002**
	360	A	4.8	**CU1F-360-A2002**
	480	B	6.0	**CU1F-480-B2002**

■ Operational environment and general specifications

Ambient temperature	-5°C to +40°C (There should be no freezing and dew condensation.)
Relative temperature	45% to 85%
Altitude	1000 m or less
Style	Dry, self-cooled, single-phase, compound-wound; dry, self-cooled, three-phase, compound-wound
Insulation type	Type A, type B, type F, type H
Conformed standard	JIS C 6436 small power transformer for electric equipment JIS C 3310 power transformer for electric equipment JEC2200 transformer

■ Type number nomenclature

CU1F - 200 - A 20 10

Series
1F: Single Phase
3F: Three phase

Rated capacity
100: 100VA
150: 150VA
200: 200VA, etc.

Secondary voltage
02: 24 V AC/ 10: 100 V, 110 V AC
20: 200 V, 220 V AC

Primary voltage
10: 100 V, 110 V AC/ 20: 200 V, 220 V AC
40: 380 V, 400 V, 440 V AC

Insulation type
A: Type A B: Type B Etc.

■ Dimensions, mm

Type	Rated capacity [VA]	Dimensions (mm)									Primary terminal	Secondary terminal	Drawing No.
		Shield	W	D	Ds	Dp	H	w	d	ΦS			
CU1F-050-A2010	50	Earth-equipped	77	88			92	52	60	5	M4	M4	Figure 1
CU1F-100-A2010	100		86	93			100	60	65	5	M4	M4	
CU1F-150-A2010	150		97	93			109	65	70	5	M4	M4	Figure 2
CU1F-200-A2010	200		97	99			109	65	75	5	M4	M4	
CU1F-300-A2010	300		106	110			117	75	85	5	M4	M4	
CU1F-500-B2010	500		115	116			124	80	95	6.5	M4	M4	
CU1F-750-B2010	750		134	121			140	90	100	6.5	M4	M4	
CU1F-1K-B2010	1k		153	122			156	105	95	8	M4	M4	
CU1F-1.5K-B2010	1.5k		172	154	78	76	172	120	100	8	M4	M4	Figure 3
CU1F-2K-B2010	2k		172	180	91	89	172	120	125	8	M4	M4	
CU1F-3K-B2010	3k		197	214	107	107	202	130	145	10	M5	M5	
CU1F-4K-H2010	4k		212	210	110	100	219	150	140	10	M5	M5	Figure 4
CU1F-5K-H2010	5k		212	251	133	118	219	150	170	10	M5	M5	
CU1F-6K-H2010	6k		242	234	117	117	243	150	165	10	M5	M5	
CU1F-7.5K-H2010	7.5k		260	225	120	105	370	170	160	13	M5	M8	Figure 5
CU1F-10K-H2010	10k		270	250	135	115	395	170	170	13	M6	M8	

• 4 kVA or more: Equipped with eye bolts.

Type	Rated capacity [VA]	Dimensions (mm)									Primary terminal	Secondary terminal	Drawing No.
		Shield	W	D	Ds	Dp	H	w	d	ΦS			
CU1F-050-A4010	50	Earth-equipped	77	88			92	52	60	5	M4	M4	Figure 1
CU1F-100-A4010	100		86	93			100	60	65	5	M4	M4	
CU1F-150-A4010	150		97	93			109	65	70	5	M4	M4	Figure 2
CU1F-200-A4010	200		97	108			109	65	85	5	M4	M4	
CU1F-300-A4010	300		106	110			117	75	85	5	M4	M4	
CU1F-500-B4010	500		115	116			124	80	95	6.5	M4	M4	
CU1F-750-B4010	750		134	121			140	90	100	6.5	M4	M4	
CU1F-1K-B4010	1k		153	122			156	105	95	8	M4	M4	
CU1F-1.5K-B4010	1.5k		172	156	80	76	172	120	105	8	M4	M4	Figure 3
CU1F-2K-B4010	2k		172	182	93	89	172	120	130	8	M4	M4	
CU1F-3K-B4010	3k		197	211	107	104	202	130	145	10	M5	M5	
CU1F-4K-H4010	4k		212	214	111	103	219	150	140	10	M5	M5	Figure 4
CU1F-5K-H4010	5k		212	231	118	113	219	150	160	10	M5	M5	
CU1F-6K-H4010	6k		242	223	119	104	243	150	160	10	M5	M5	
CU1F-7.5K-H4010	7.5k		260	225	120	105	370	170	160	13	M5	M8	Figure 5
CU1F-10K-H4010	10k		270	250	135	115	395	170	170	13	M5	M8	

• 4 kVA or more: Equipped with eye bolts.

Control Power Transformers
CU1F, CU3F

■ Dimensions, mm

Type	Rated capacity [VA]	Dimensions (mm)									Primary terminal	Secondary terminal	Drawing No.
		Shield	W	D	Ds	Dp	H	w	d	ΦS			
CU1F-050-A4020	50	Earth-equipped	77	88			92	52	60	5	M4	M4	Figure 1
CU1F-100-A4020	100		86	93			100	60	65	5	M4	M4	
CU1F-150-A4020	150		97	93			109	65	70	5	M4	M4	Figure 2
CU1F-200-A4020	200		97	108			109	65	85	5	M4	M4	
CU1F-300-A4020	300		106	110			117	75	85	5	M4	M4	
CU1F-500-B4020	500		115	116			124	80	95	6.5	M4	M4	
CU1F-750-B4020	750		134	121			140	90	100	6.5	M4	M4	
CU1F-1K-B4020	1k		153	122			156	105	95	8	M4	M4	
CU1F-1.5K-B4020	1.5k		172	152	76	76	172	120	105	8	M4	M4	Figure 3
CU1F-2K-B4020	2k		172	179	90	89	172	120	130	8	M4	M4	
CU1F-3K-B4020	3k		197	211	107	104	202	130	145	10	M5	M5	
CU1F-4K-H4020	4k		212	206	103	103	219	150	140	10	M5	M5	Figure 4
CU1F-5K-H4020	5k		212	223	110	113	219	150	160	10	M5	M5	
CU1F-6K-H4020	6k		242	208	104	104	243	150	150	10	M5	M5	
CU1F-7.5K-H4020	7.5k		260	210	105	105	365	170	160	13	M5	M5	Figure 5
CU1F-10K-H4020	10k		270	235	120	115	390	170	170	13	M5	M6	

• 4 kVA or more: Equipped with eye bolts.

Type	Rated capacity [VA]	Dimensions (mm)									Primary terminal	Secondary terminal	Drawing No.
		Shield	W	D	Ds	Dp	H	w	d	ΦS			
CU1F-050-A1010	50	Earth-equipped	77	88			92	52	60	5	M4	M4	Figure 1
CU1F-100-A1010	100		86	93			100	60	65	5	M4	M4	
CU1F-200-A1010	200		97	99			109	65	75	5	M4	M4	Figure 2
CU1F-300-A1010	300		106	110			117	75	85	5	M4	M4	
CU1F-500-B1010	500		115	116			124	80	95	6.5	M4	M4	
CU1F-1K-B1010	1k		153	124			156	105	100	8	M4	M4	
CU1F-1.5K-B1010	1.5k		172	166	83	83	172	120	100	8	M4	M4	Figure 3
CU1F-2K-B1010	2k		172	186	93	93	172	120	135	8	M4	M4	
CU1F-3K-B1010	3k		197	224	112	112	202	130	145	10	M5	M5	

Type	Rated capacity [VA]	Dimensions (mm)									Primary terminal	Secondary terminal	Drawing No.
		Shield	W	D	Ds	Dp	H	w	d	ΦS			
CU1F-050-A2020	50	Earth-equipped	77	88			92	52	60	5	M4	M4	Figure 1
CU1F-100-A2020	100		86	93			100	60	65	5	M4	M4	
CU1F-200-A2020	200		97	108			109	65	85	5	M4	M4	Figure 2
CU1F-300-A2020	300		106	110			117	75	85	5	M4	M4	
CU1F-500-B2020	500		115	116			124	80	95	6.5	M4	M4	
CU1F-1K-B2020	1k		153	122			156	105	95	8	M4	M4	
CU1F-1.5K-B2020	1.5k		172	152	76	76	172	120	100	8	M4	M4	Figure 3
CU1F-2K-B2020	2k		172	189	91	98	172	120	130	8	M4	M4	
CU1F-3K-B2020	3k		197	224	112	112	202	130	145	10	M5	M5	

Type	Rated capacity [VA]	Dimensions (mm)							Primary terminal	Secondary terminal	Drawing No.
		Shield	W	D	H	w	d	ΦS			
CU1F-048-A1002	48	Earth-equipped	77	88	92	52	60	5	M4	M4	Figure 6
CU1F-072-A1002	72		86	85	100	60	57	5	M4	M4	
CU1F-120-A1002	120		97	93	109	65	70	5	M4	M4	Figure 7
CU1F-240-A1002	240		106	110	117	75	85	5	M4	M4	
CU1F-360-A1002	360		115	111	124	80	90	6.5	M4	M4	
CU1F-480-B1002	480		134	103	140	90	85	6.5	M4	M4	

Type	Rated capacity [VA]	Dimensions (mm)							Primary terminal	Secondary terminal	Drawing No.
		Shield	W	D	H	w	d	ΦS			
CU1F-048-A2002	48	Earth-equipped	77	88	92	52	60	5	M4	M4	Figure 6
CU1F-072-A2002	72		86	85	100	60	57	5	M4	M4	
CU1F-120-A2002	120		97	93	109	65	70	5	M4	M4	Figure 7
CU1F-240-A2002	240		106	110	117	75	85	5	M4	M4	
CU1F-360-A2002	360		115	111	124	80	90	6.5	M4	M4	
CU1F-480-B2002	480		134	103	140	90	85	6.5	M4	M4	

■ **Dimensions, mm**

Figure 1

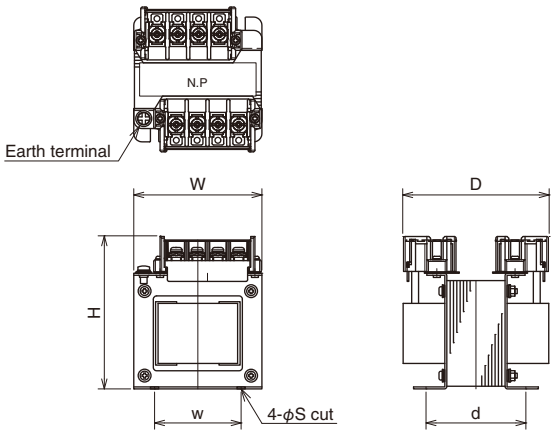

Figure 2

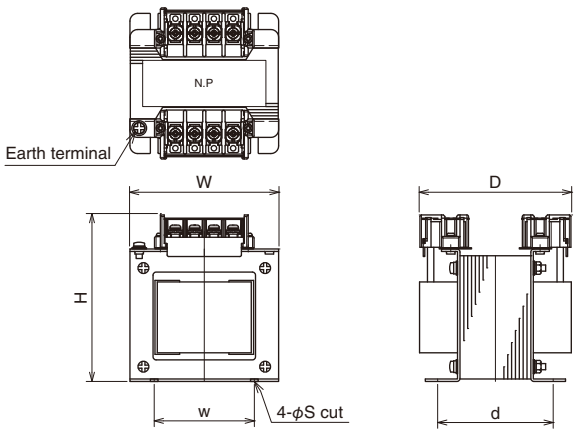

Figure 3

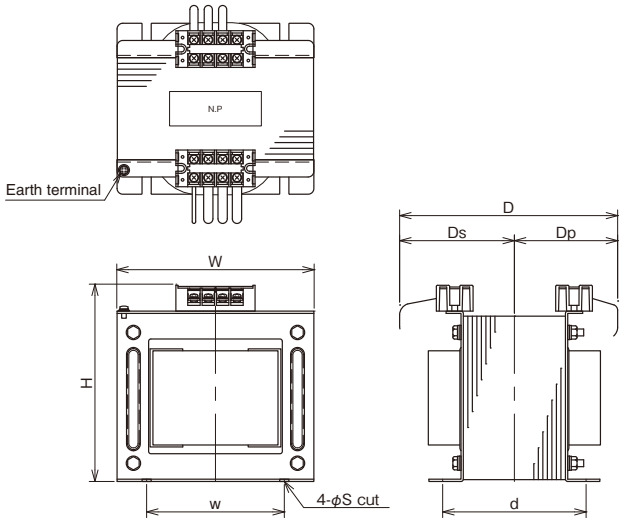

Figure 4

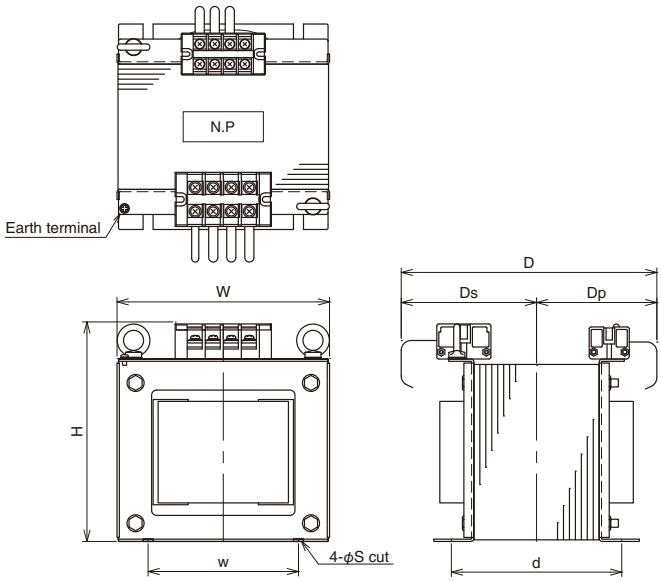

Figure 5

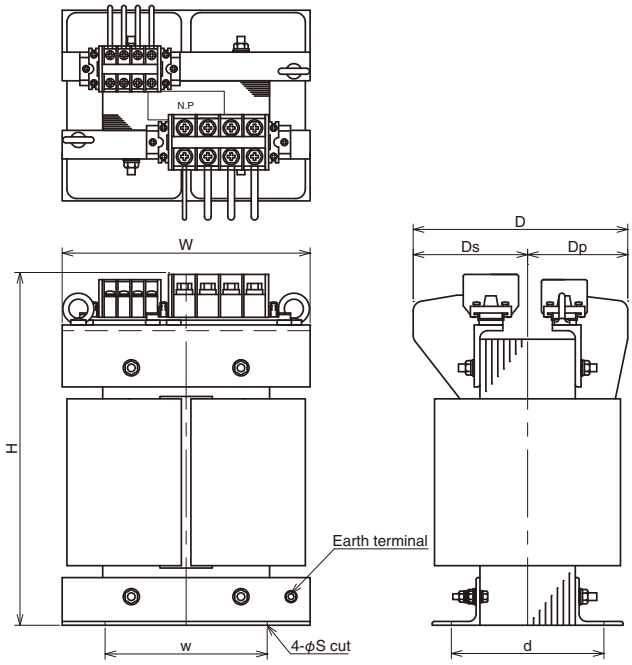

Control Power Transformers
CU1F, CU3F

■ Dimensions, mm

Figure 6

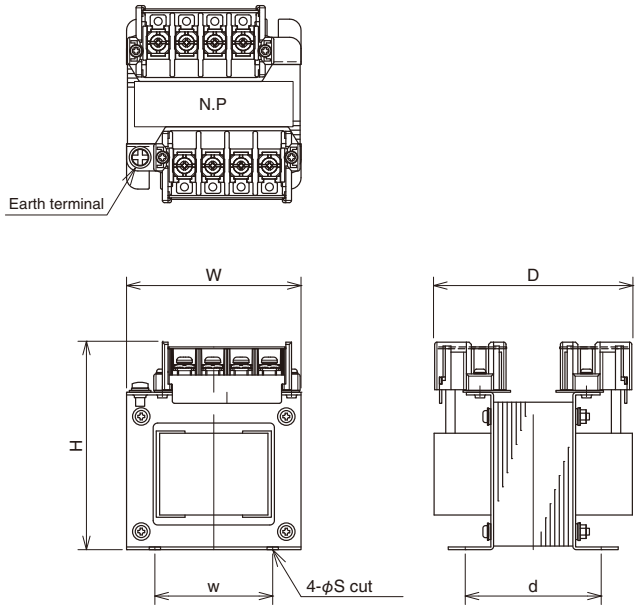

Figure 7

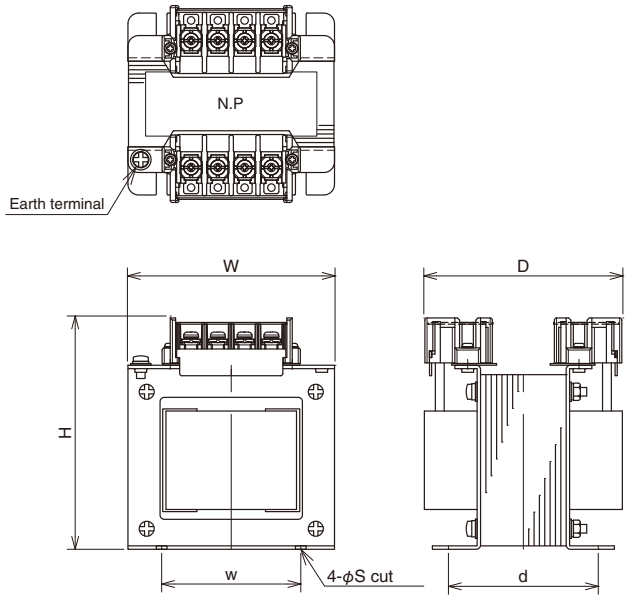

■ Wiring and terminal layout

Voltage symbol 2010

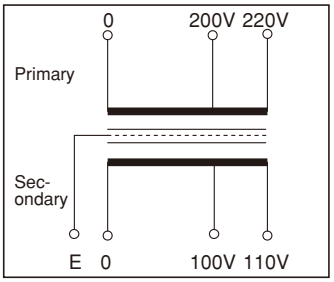

Voltage symbol 2010
(Capacity: 6 k, 7.5 k, 10 k VA only)

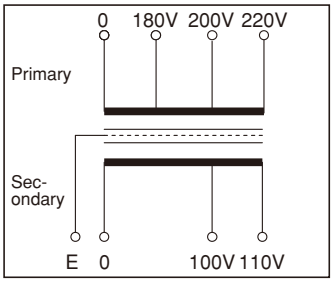

Voltage symbol 4010

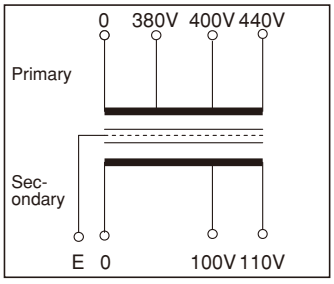

Voltage symbol 4020

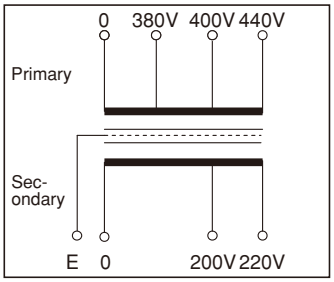

Voltage symbol 1010

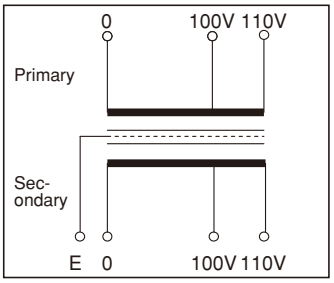

Voltage symbol 2020

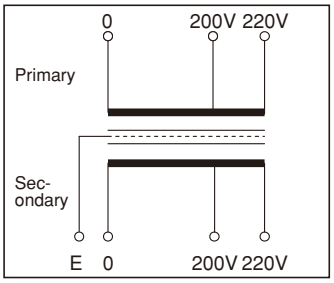

Voltage symbol 1002

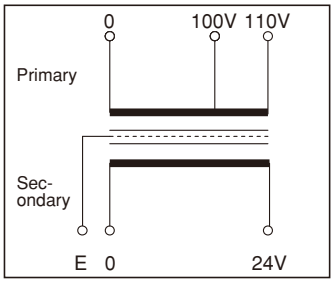

Voltage symbol 2002

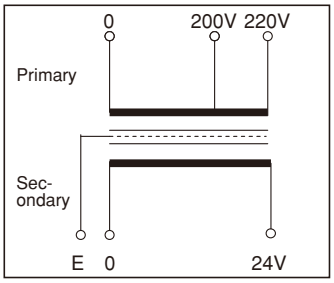

Note : E is an interference prevention board (shield plate). It is not grounded.

CU3F Series (3-phases)

■ Type and specifications

Transformation ratio Primary voltage/ secondary voltage Frequency	Rated capacity [VA]	Insulation type	Mass [kg]	Type
380V, 400V, 440V AC / 200V, 220V AC 50/60Hz Y-Δ connection	500	A	8.0	**CU3F-500-A4020**
	750	A	11.0	**CU3F-750-A4020**
	1k	B	11.6	**CU3F-1K-B4020**
	1.5k	B	16.0	**CU3F-1.5K-B4020**
	2k	B	20.1	**CU3F-2K-B4020**
	3k	B	29.0	**CU3F-3K-B4020**
	4k	B	36.6	**CU3F-4K-B4020**
	5k	B	42.7	**CU3F-5K-B4020**
	6k	B	49.9	**CU3F-6K-B4020**
	7.5k	F	61.0	**CU3F-7.5K-F4020**
	10k	F	75.0	**CU3F-10K-F4020**

■ Dimensions, mm

Figure 8

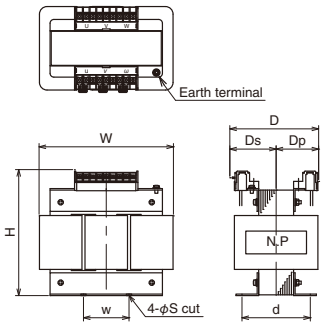

Figure 9

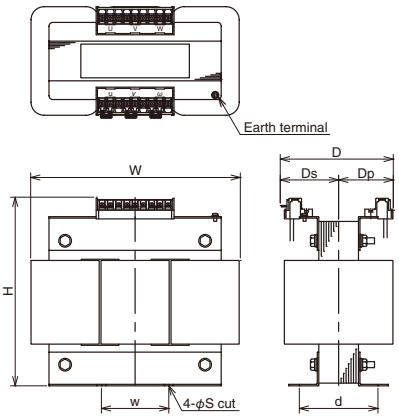

■ Wiring and terminal layout

Voltage symbol 4020

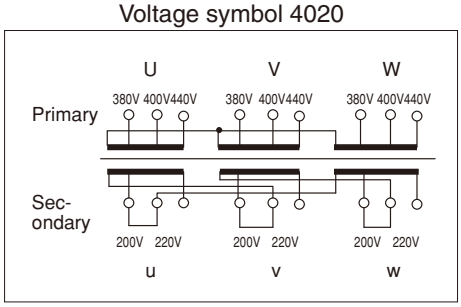

■ Dimensions, mm

Type	Rated capacity [VA]	Dimensions (mm) Shield	W	D	Ds	Dp	H	w	d	ΦS	Primary terminal	Secondary terminal	Drawing No.
CU3F-500-A4020	500	Without earth-equipped	177	117	61	56	166	60	90	7	M3.5	M3.5	Figure 6
CU3F-750-A4020	750		177	123	64	59	166	60	95	7	M3.5	M3.5	
CU3F-1K-B4020	1k		194	121	63	58	183	65	90	7	M3.5	M3.5	
CU3F-1.5K-B4020	1.5k		217	139	72	67	202	70	100	8.5	M4	M4	
CU3F-2K-B4020	2k		235	141	73	68	218	80	105	8.5	M4	M4	
CU3F-3K-B4020	3k		280	151	78	73	252	90	105	11.5	M4	M4	
CU3F-4K-B4020	4k		295	180	90	90	275	100	135	11.5	M4	M4	Figure 7
CU3F-5K-B4020	5k		300	190	95	95	275	100	145	11.5	M4	M4	
CU3F-6K-B4020	6k		310	200	100	100	275	100	155	11.5	M4	M4	
CU3F-7.5K-F4020	7.5k		310	220	110	110	325	150	150	13	M5	M5	
CU3F-10K-F4020	10k		340	220	110	110	350	150	150	13	M5	M5	

• 4 kVA or more: Equipped with eye bolts.

Voltage Fault Countermeasure Devices
TRAFY FFT Series

■ Features

- TRAFY is a multi-function product which functions as both a power supply transformer and noise filter in a single device.
- Provides noise attenuation performance over 1,000 times greater than conventional power supply transformers.
- Delivers outstanding noise attenuation performance over a wide frequency band.
- Symmetrical circuitry on both primary and secondary sides ensures noise attenuation effect in both directions.
- Compliant with the new low voltage directive (2014/35 / EU)
- Revised Chinese version RoHS compliant

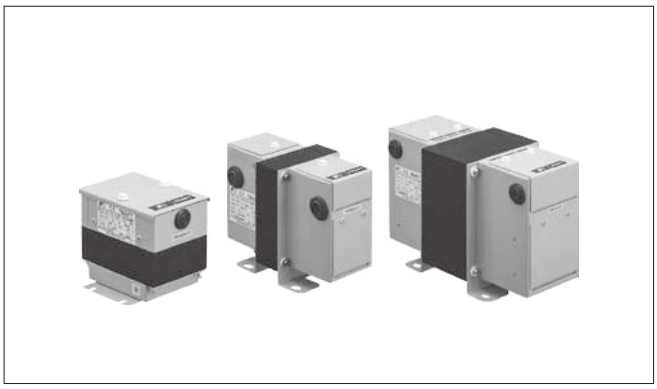

■ Type number nomenclature

TRAFY

[1] [2] [3] [4]
FFT - SA / 50 / 100 - 100

Model class

Type	Code
TRAFY	FFT

[1] Series class

Type	Code
FFT-SA (standard type)	SA
FFT-HA (high-performance type)	HA

[2] Rated capacity

Type [VA]	Code
50	50
100	100
200	200
300	300
500	500
750	750
1 k	1 k
1.5 k	1.5 k
2 k	2 k
3 k	3 k
5 k	5 k
7.5 k	7.5 k
10 k	10 k

[3] Rated primary voltage

Voltage [V]	Code
100	100
200	200
400	400

[4] Rated secondary voltage

Voltage [V]	Code
100	100
200	200

(Note) SA, HA type manufacturable range
Primary voltage: 100 to 460 V
Secondary voltage: 100 to 250 V

■ Models

Capacity [VA]	Series	
	SA	HA
50	○	–
100	○	○
200	○	○
300	○	○
500	○	○
750	○	○
1 k	○	○
1.5 k	○	○
2 k	○	○
3 k	○	○
5 k	○	○
7.5 k	○	○
10 k	○	○

(Note) ○ mark indicates manufactured models.

■ Rating specifications, types, product codes

● Standard type (SA type)

Note: Orders can even be placed using product codes.

Type	Product code	Rated capacity [VA]	Number of phases	Rated voltage [V]	Rated frequency [Hz]	Leakage current [μA]
FFT-SA/50/100-100	TNTS0050-11	50	Single-phase	100/100	50/60	100 or less
FFT-SA/100/100-100B	TNTS0100-11B	100				
FFT-SA/200/100-100B	TNTS0200-11B	200				
FFT-SA/300/100-100B	TNTS0300-11B	300				
FFT-SA/500/100-100B	TNTS0500-11B	500				
FFT-SA/750/100-100B	TNTS0750-11B	750				
FFT-SA/1k/100-100B	TNTS1000-11B	1 k				
FFT-SA/1.5k/100-100B	TNTS1500-11B	1.5 k				
FFT-SA/2k/100-100	TNTS2000-11	2 k				
FFT-SA/3k/100-100	TNTS3000-11	3 k				
FFT-SA/5k/100-100	TNTS5000-11	5 k				
FFT-SA/7.5k/100-100	TNTS7500-11	7.5 k				
FFT-SA/10k/100-100	TNTS010K-11	10 k				
FFT-SA/50/200-100	TNTS0050-21	50		200/100		
FFT-SA/100/200-100B	TNTS0100-21B	100				
FFT-SA/200/200-100B	TNTS0200-21B	200				
FFT-SA/300/200-100B	TNTS0300-21B	300				
FFT-SA/500/200-100B	TNTS0500-21B	500				
FFT-SA/750/200-100B	TNTS0750-21B	750				
FFT-SA/1k/200-100B	TNTS1000-21B	1 k				
FFT-SA/1.5k/200-100B	TNTS1500-21B	1.5 k				
FFT-SA/2k/200-100	TNTS2000-21	2 k				
FFT-SA/3k/200-100	TNTS3000-21	3 k				
FFT-SA/5k/200-100	TNTS5000-21	5 k				
FFT-SA/7.5k/200-100	TNTS7500-21	7.5 k				
FFT-SA/10k/200-100	TNTS010K-21	10 k				
FFT-SA/100/200-200B	TNTS0100-22B	100		200/200		
FFT-SA/200/200-200B	TNTS0200-22B	200				
FFT-SA/300/200-200B	TNTS0300-22B	300				
FFT-SA/500/200-200B	TNTS0500-22B	500				
FFT-SA/750/200-200B	TNTS0750-22B	750				
FFT-SA/1k/200-200B	TNTS1000-22B	1 k				
FFT-SA/1.5k/200-200B	TNTS1500-22B	1.5 k				
FFT-SA/2k/200-200	TNTS2000-22	2 k				
FFT-SA/3k/200-200	TNTS3000-22	3 k				
FFT-SA/5k/200-200	TNTS5000-22	5 k				
FFT-SA/7.5k/200-200	TNTS7500-22	7.5 k				
FFT-SA/10k/200-200	TNTS010K-22	10 k				
FFT-SA/100/400-200B	TNTS0100-42B	100		400/200		
FFT-SA/200/400-200B	TNTS0200-42B	200				
FFT-SA/300/400-200B	TNTS0300-42B	300				
FFT-SA/500/400-200B	TNTS0500-42B	500				
FFT-SA/750/400-200B	TNTS0750-42B	750				
FFT-SA/1k/400-200B	TNTS1000-42B	1 k				
FFT-SA/1.5k/400-200B	TNTS1500-42B	1.5 k				
FFT-SA/2k/400-200	TNTS2000-42	2 k				
FFT-SA/3k/400-200	TNTS3000-42	3 k				
FFT-SA/5k/400-200	TNTS5000-42	5 k				
FFT-SA/7.5k/400-200	TNTS7500-42	7.5 k				
FFT-SA/10k/400-200	TNTS010K-42	10 k				

Voltage Fault Countermeasure Devices
TRAFY FFT Series

● High-performance type (HA type)

Note: Orders can even be placed using product codes.

Type	Product code	Rated capacity [VA]	Number of phases	Rated voltage [V]	Rated frequency [Hz]	Leakage current [μA]
FFT-HA/100/100-100B	TNTH0100-11B	100	Single-phase	100/100	50/60	100or less
FFT-HA/200/100-100B	TNTH0200-11B	200				
FFT-HA/300/100-100B	TNTH0300-11B	300				
FFT-HA/500/100-100B	TNTH0500-11B	500				
FFT-HA/750/100-100B	TNTH0750-11B	750				
FFT-HA/1k/100-100B	TNTH1000-11B	1 k				
FFT-HA/1.5k/100-100B	TNTH1500-11B	1.5 k				
FFT-HA/2k/100-100	TNTH2000-11	2 k				
FFT-HA/3k/100-100	TNTH3000-11	3 k				
FFT-HA/5k/100-100	TNTH5000-11	5 k				
FFT-HA/7.5k/100-100	TNTH7500-11	7.5 k				
FFT-HA/10k/100-100	TNTH010K-11	10 k				
FFT-HA/100/200-100B	TNTH0100-21B	100		200/100		
FFT-HA/200/200-100B	TNTH0200-21B	200				
FFT-HA/300/200-100B	TNTH0300-21B	300				
FFT-HA/500/200-100B	TNTH0500-21B	500				
FFT-HA/750/200-100B	TNTH0750-21B	750				
FFT-HA/1k/200-100B	TNTH1000-21B	1 k				
FFT-HA/1.5k/200-100B	TNTH1500-21B	1.5 k				
FFT-HA/2k/200-100	TNTH2000-21	2 k				
FFT-HA/3k/200-100	TNTH3000-21	3 k				
FFT-HA/5k/200-100	TNTH5000-21	5 k				
FFT-HA/7.5k/200-100	TNTH7500-21	7.5 k				
FFT-HA/10k/200-100	TNTH010K-21	10 k				
FFT-HA/100/200-200B	TNTH0100-22B	100		200/200		
FFT-HA/200/200-200B	TNTH0200-22B	200				
FFT-HA/300/200-200B	TNTH0300-22B	300				
FFT-HA/500/200-200B	TNTH0500-22B	500				
FFT-HA/750/200-200B	TNTH0750-22B	750				
FFT-HA/1k/200-200B	TNTH1000-22B	1 k				
FFT-HA/1.5k/200-200B	TNTH1500-22B	1.5 k				
FFT-HA/2k/200-200	TNTH2000-22	2 k				
FFT-HA/3k/200-200	TNTH3000-22	3 k				
FFT-HA/5k/200-200	TNTH5000-22	5 k				
FFT-HA/7.5k/200-200	TNTH7500-22	7.5 k				
FFT-HA/10k/200-200	TNTH010K-22	10 k				
FFT-HA/100/400-200B	TNTH0100-42B	100		400/200		
FFT-HA/200/400-200B	TNTH0200-42B	200				
FFT-HA/300/400-200B	TNTH0300-42B	300				
FFT-HA/500/400-200B	TNTH0500-42B	500				
FFT-HA/750/400-200B	TNTH0750-42B	750				
FFT-HA/1k/400-200B	TNTH1000-42B	1 k				
FFT-HA/1.5k/400-200B	TNTH1500-42B	1.5 k				
FFT-HA/2k/400-200	TNTH2000-42	2 k				
FFT-HA/3k/400-200	TNTH3000-42	3 k				
FFT-HA/5k/400-200	TNTH5000-42	5 k				
FFT-HA/7.5k/400-200	TNTH7500-42	7.5 k				
FFT-HA/10k/400-200	TNTH010K-42	10 k				

■ External dimension drawings [unit: mm]

● SA Series (standard series)

● 50 VA

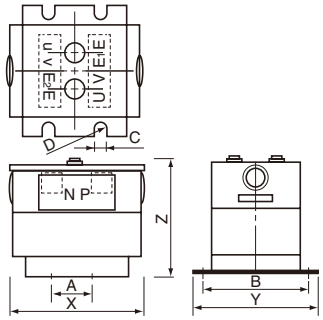

Capacity [VA]	Dimensions [mm]							Weight [kg]	Terminal screw	Connectable wires Max. [mm²]
	X	Y	Z	A	B	C	D			
50	104	98	90	40	88	5	2.5	1.6	M3	1.25
tolerance	± 3	± 1	± 4	± 1	± 2	–	–	–		

● 100 to 500 VA

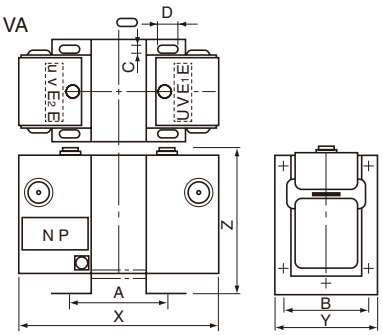

Capacity [VA]	Dimensions [mm]							Weight [kg]	Terminal screw	Connectable wires Max. [mm²]
	X	Y	Z	A	B	C	D			
100	166	89	132	73	73	8	12	3.2	M3.5	1.25
200	181	89	132	88	73	8	12	4.3		
300	195	89	132	102	73	8	12	5.3		
500	219	89	132	126	73	8	12	6.9		
tolerance	± 4.5	± 2	± 4	± 3.5	± 1.5	± 0.5	± 0.5	–		

● 750 VA to 1.5 kVA

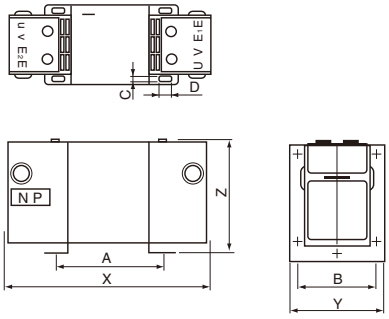

Capacity [VA]	Dimensions [mm]							Weight [kg]	Terminal screw	Connectable wires Max. [mm²]
	X	Y	Z	A	B	C	D			
750	250	120	167	119	98	8	12	11.3	M3.5	2
1 k	266	120	167	135	98	8	12	13.2		
1.5 k	296	120	167	165	98	8	12	17.3		
tolerance	± 4.5	± 2	± 4	± 3.5	± 1.5	± 0.5	± 0.5	–		

● 2 to 3 kVA

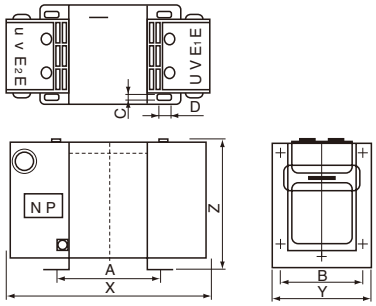

Capacity [VA]	Dimensions [mm]							Weight [kg]	Terminal screw	Connectable wires Max. [mm²]
	X	Y	Z	A	B	C	D			
2 k	316	154	201	158	126	10	15	24.2	M4	3.5
3 k	340	154	201	182	126	10	15	29.5		
tolerance	± 4.5	± 2	± 4	± 4	± 1.5	± 0.5	± 0.5	–		

● 5 to 7.5 kVA

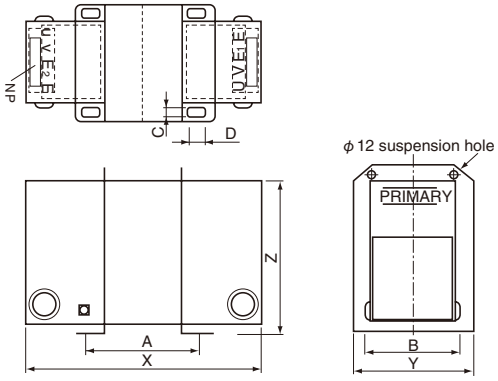

Capacity [VA]	Dimensions [mm]							Weight [kg]	Terminal screw	Connectable wires Max. [mm²]
	X	Y	Z	A	B	C	D			
5 k	415	212	310	175	172	12	18	56.0	M8	22
7.5 k	435	212	310	195	172	12	18	66.0		
tolerance	± 5	± 2	± 4.5	± 4.5	± 1.5	± 0.5	± 0.5	–		

● 10 kVA

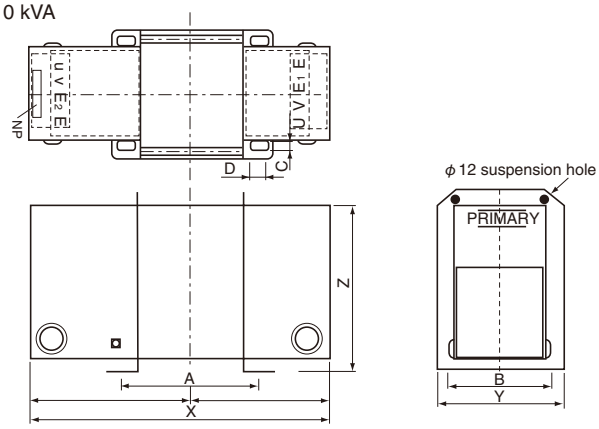

Capacity [VA]	Dimensions [mm]							Weight [kg]	Terminal screw	Connectable wires Max. [mm²]
	X	Y	Z	A	B	C	D			
10 k	470	212	310	230	172	12	18	77.0	M8	22
tolerance	± 5	± 2	± 4.5	± 4.5	± 1.5	± 0.5	± 0.5	–		

Voltage Fault Countermeasure Devices
TRAFY FFT Series

● HA Series (high-performance series)

● 100 to 500 VA

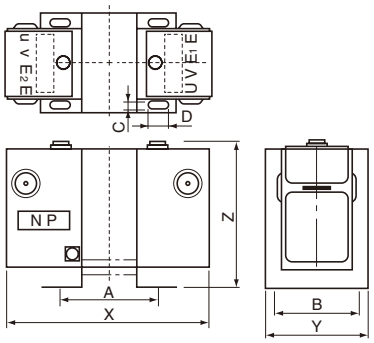

Capacity [VA]	Dimensions [mm]									Weight [kg]	Terminal screw	Connectable wires Max. [mm²]
	X	Y	Z	A	B	C	D	E	F			
100	166	89	132	73	73	8	12	–	–	3.3	M3.5	1.25
200	181	89	132	88	73	8	12	–	–	4.4		
300	195	89	132	102	73	8	12	–	–	5.4		
500	219	89	132	126	73	8	12	–	–	7.0		
tolerance	± 4.5	± 2	± 4	± 3.5	± 1.5	± 0.5	± 0.5	–	–	–		

● 750 VA to 1.5 kVA

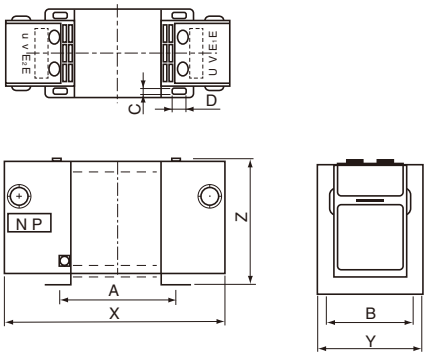

Capacity [VA]	Dimensions [mm]							Weight [kg]	Terminal screw	Connectable wires Max. [mm²]
	X	Y	Z	A	B	C	D			
750	250	120	167	119	98	8	12	11.4	M3.5	2
1 k	266	120	167	135	98	8	12	13.3		
1.5 k	296	120	167	165	98	8	12	17.4		
tolerance	± 4.5	± 2	± 4	± 3.5	± 1.5	± 0.5	± 0.5	–		

D2

● 2 to 3 kVA

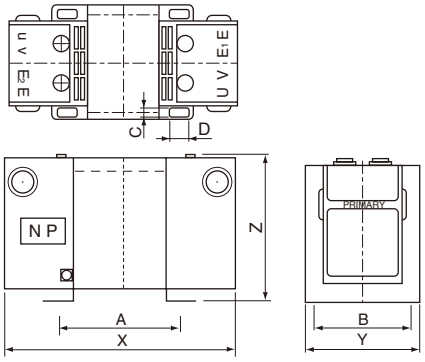

Capacity [VA]	Dimensions [mm]									Weight [kg]	Terminal screw	Connectable wires Max. [mm²]
	X	Y	Z	A	B	C	D	E	F			
2 k	316	154	201	158	126	10	15	–	–	24.4	M4	3.5
3 k	340	154	201	182	126	10	15	–	–	29.7		
tolerance	± 4	± 2	± 4	± 4	± 1.5	± 0.5	± 0.5	–	–	–		

● 5 to 7.5 kVA

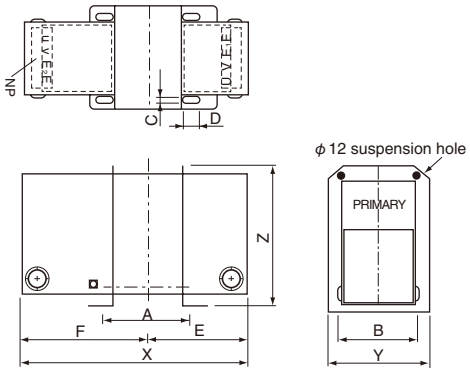

Capacity [VA]	Dimensions [mm]									Weight [kg]	Terminal screw	Connectable wires Max. [mm²]
	X	Y	Z	A	B	C	D	E	F			
5 k	455	212	310	175	172	12	18	207.5	247.5	60.3	M8	22
7.5 k	475	212	310	195	172	12	18	217.5	257.5	69.8		
tolerance	± 5	± 2	± 4.5	± 4.5	± 1.5	± 0.5	± 0.5	–	–	–		

● 10 kVA

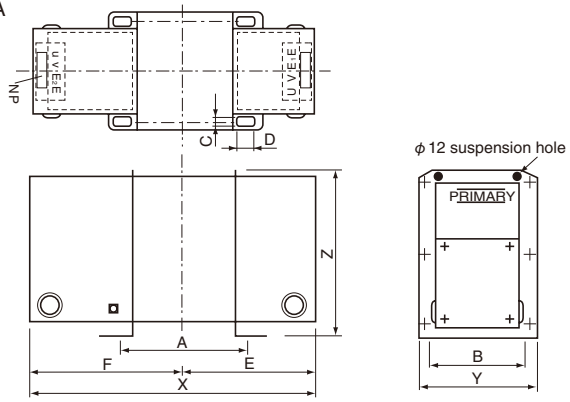

Capacity [VA]	Dimensions [mm]									Weight [kg]	Terminal screw	Connectable wires Max. [mm²]
	X	Y	Z	A	B	C	D	E	F			
10 k	510	212	310	230	172	12	18	235	275	80.4	M8	22
tolerance	± 5	± 2	± 4.5	± 4.5	± 1.5	± 0.5	± 0.5	–	–	–		

■ Standard characteristics

Series	SA (standard)	HA (high performance)
Type	**FFT-SA**	**FFT-HA**
Rated capacity [VA]	50, 100, 200, 300, 500, 750, 1 k, 1.5 k, 2 k, 3 k, 5 k, 7.5 k, 10 k	100, 200, 300, 500, 750, 1 k, 1.5 k, 2 k, 3 k, 5 k, 7.5 k, 10 k
Number of phases (Note 1)	Single-phase (three-phase)	
Rated voltage [V] (Note 1)	100/100, 200/100, (200/200), (400/200)	
Rated current	0.5 to 100 A at 100 V, 0.25 to 50 A at 200 V	
Rated frequency [Hz]	50/60	
Leakage current [μA]	100 or less	
Insulation class	Class B	
Voltage fluctuation range (Note 2)	±4% (±10% for 50 VA)	
Efficiency [%]	50 VA products: 85 or higher, 100 to 750 VA products: 90 or higher, 1 to 10 kVA products: 95 or higher	
Withstand voltage	2,000 VAC for 1 minute	

(Note 1) The values in parentheses are for limited standard products.
(Note 2) The voltage fluctuation range is the value for power factor of 0.9.
(Note 3) Please inquire for details on other than the above.

■ Equivalent circuits

● SA, HA Series

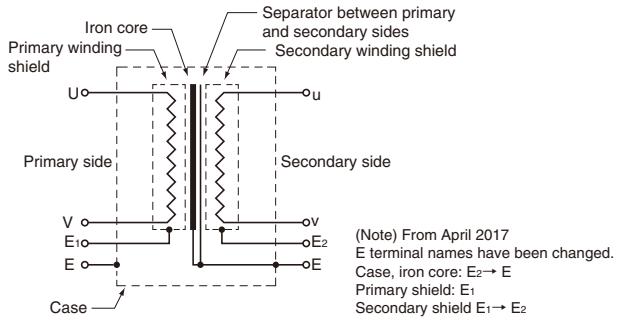

■ Noise attenuation characteristics

TRAFY completely eliminates normal mode noise conducted between power lines, and common mode noise conducted between power lines and the ground.

(1) Static characteristics

● SA Series

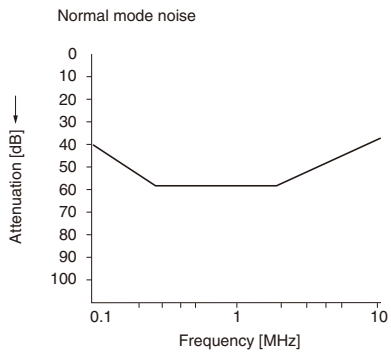

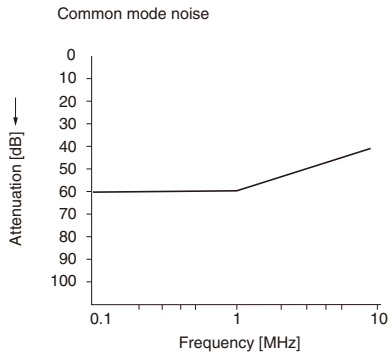

● HA Series

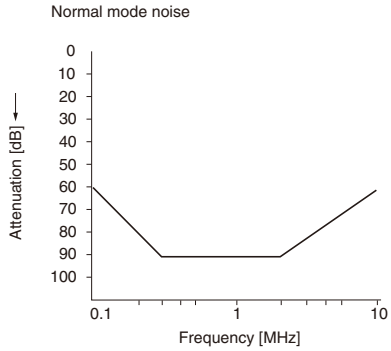

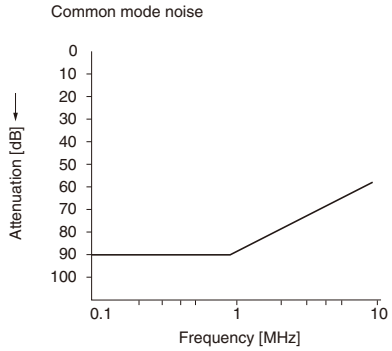

■ External terminal connection method and grounded circuits (grounding examples, precautions)

<Grounding examples>

● SA, HA Series

(1) Basic examples of grounding at the primary side, and no grounding at the primary side are shown below.

(2) Determine whether to ground at the primary side based on the following conditions.

[If grounding at primary side]

● If ground wire meeting the following conditions exists

[1] The cross-sectional area of the ground wire is sufficient.

[2] An independent ground wire can be wired separately from the secondary side.

[3] The ground wire does not pass through the source of the noise.

[If not grounding at primary side]

● If there is no ground wire

● If the situation is as follows even when there is a ground wire

[1] The ground wire is long and thin.

[2] The ground wire passes through the source of the noise, and noise intrusion is conceivable.

[3] There is multi-point grounding, and noise intrusion from other devices is conceivable.

[If grounding at primary side]

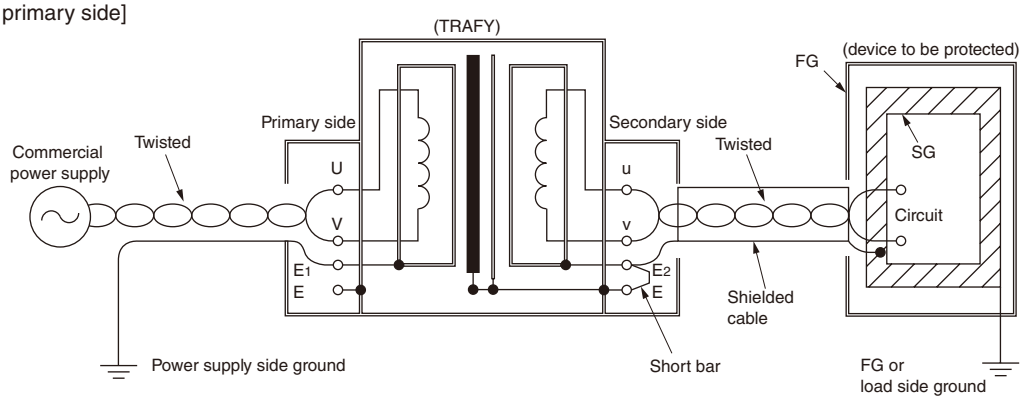

[If not grounding at primary side]

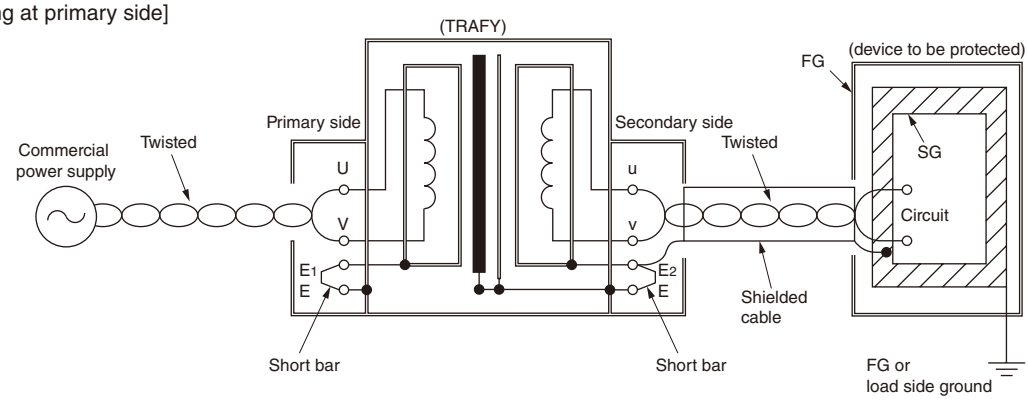

■ External terminal connection method and grounded circuits (grounding examples, precautions)

<Precautions>

● Install near noise sources or near devices to be protected by noise.

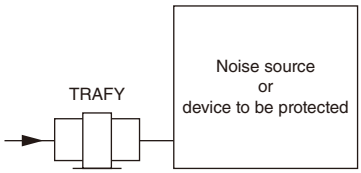

● Keep input/output wiring as short as possible, and use thick wires.
● Keep ground wires as short as possible, use thick wires, and lower impedance.
● Keep input/output wiring as far away as possible. Keep input/output wires separate, and do not bundle them together.

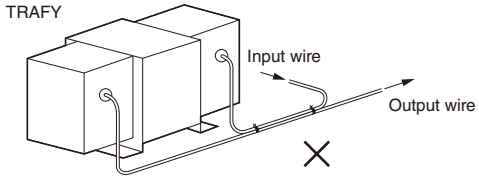

● Try as best as possible not to connect more than a single unit to a single device to be protected from noise.

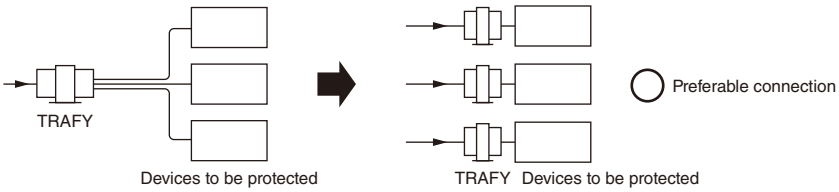

● Try to use twisted pair wires for input/output wiring.
● Shield input/output wiring with shielded wire or metal wiring pipes, etc.
Ground the shielded wire shielding or metal wiring pipes.
● Avoid the use of multi-point grounding, and use single-point grounding.
● Even if using single-point grounding, if the length of each ground wire differs, employ common grounding with a copper bar.

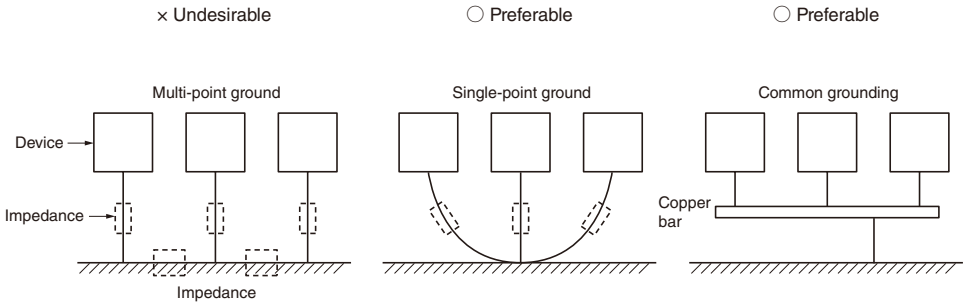

● Refer to the grounded circuit examples on page D2-78.

Voltage Fault Countermeasure Devices
TRAFY FFT Series

■ Installation method

1. Pass foundation bolts through the foundation holes on the legs, and screw them in securely.
2. The installation location should be well ventilated, have minimal dust/humidity, be sufficiently cooled, and the grounding should have low impedance.
3. Fit crimp terminals to the ends of drawn in wires, and secure them firmly to a terminal block to prevent them coming loose.
4. The installation directions shown in the diagram on the right are recommended based on the weight and whether there are any heat dissipation holes.

Capacity [VA]	50 to 1.5 k	50 to 10 k
Installation direction (viewed from front)	Ceiling 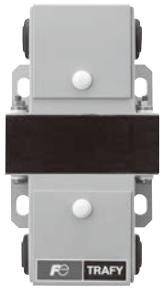 Ground	Ceiling Ground

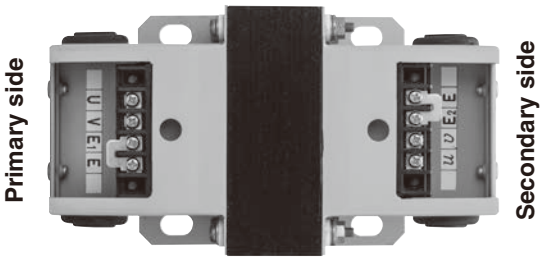

■ Accessories

● Standard accessories (SA, HA Series)

E1, E2 short bar

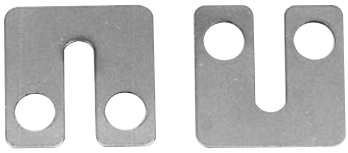

(3 kVA or less only provided as standard)

(Photo No. AF89-1052)

Can be mounted on the IEC 35 mm rail.

■ Features

- Compact, lightweight, highly efficient (low heat), and low cost
- Wide input voltage range:
  85 to 265 VAC Continuous input (CY318 and CY324)
  85 to 132 VAC/170 to 265 VAC Automatic input selection (CY307, CY310, and CY312)
- Possible to apply 100% load at the ambient temperature of 50˚C.
  * Possible to apply 60% load at the ambient temperature of 60˚C.
- Output retention time length at the momentary power failure in the input [20/30 ms (100/200 V) or longer)]
- Provided with LED lighting indication function for output voltage drop
- UL508 listing: Certified for Standard for Industrial Control Equipment
- Improved the control panel storage efficiency by standardizing external dimensions (to the depth of 110 mm and length of 97 mm).

■ Applications

Control equipment, FA equipment, office equipment, measuring instruments, displays, and other electronic application devices

■ Safety Standards

c UL us LISTED	Certified	UL508, CSA22.2 No.14 (C-UL)
c UL us	Certified	UL60950, CSA60950 (C-UL)
△	Certified	EN60950 (TÜV)
△	Certified	EN50178 (TÜV)
CE	Conformed	Low Voltage Directive

■ Description of Model Numbers (Product Codes)

CY 3 □□ - □□

Basic type (Series name)
Indicates a switching power supply.

Structure
3: Rail mounting type

Output voltage
24:24 V

Output voltage
07: 75 W
10: 100 W
12: 120 W
18: 180 W
24: 240 W

Switching Power Supplies
Rail Mounting Type CY3 Series

■ Ratings and Specifications

Specification item \ Type		CY307-24	CY310-24	CY312-24	CY318-24	CY324-24
Rated DC output voltage		24 V	24 V	24 V	24 V	24 V
Maximum DC output current		3.1 A	4.1 A	5 A	7.5 A	10 A
Maximum output power		74.4 W	98.4 W	120 W	180 W	240 W
Efficiency (100/230 VAC) (Typ.)	(Note 1)	82 %/83 %	83 %/83 %	83 %/85 %	84 %/87 %	82 %/86 %
Input voltage range and frequency	(Note 2)	85 to 132/170 to 265 VAC (automatic switching)/47 to 63 Hz			85 to 265 VAC (47 to 63 Hz) or 120 to 370 VDC	
Input current (100/230 VAC) (Typ.)	(Note 1)	1.7 A/0.8 A	2.5 A/1.1 A	2.9 A/1.3 A	2.3 A/1.0 A	3.0 A/1.3 A
Input rush current (100/230 VAC) (Typ.)	(Note 3)	20 A: 100 VAC, 45 A: 230 VAC, Ta=25℃, at cold start				
Harmonic current		Complies with IEC61000-3-2.				
Output voltage variable range		21.6 to 28 V				
Maximum ripple voltage (including noise) (Note 4)	0℃ ≦ Ta ≦ +60℃	240 mV				
	-10℃ ≦ Ta ≦0℃	360 mV				
Maximum input fluctuation	(Note 5)	120 mV				
Maximum load fluctuation	(Note 6)	192 mV				
Temperature fluctuation		0.05%/℃ or less				
Overcurrent protection	(Note 7)	3.3 A or higher	4.3 A or higher	5.3 A or higher	7.9 A or higher	10.5 A or higher
Overvoltage protection	(Note 8)	30.0 to 35.0V				
Output retention time (100/230 VAC)	(Note 1)	20 ms/30 ms				
Leakage current	(Note 9)	0.75 mA or less				
Parallel operation		Not possible				
Series operation		Possible				
Operating ambient temperature	(Note 10)	−10 to +60℃, natural air cooling: −10 to +50℃ (100%): +60℃ (60%) CY324-24: −10 to +60℃ (85 to 170 VAC), natural air cooling: −10 to +50℃ (100%): +60℃ (60%) −10 to +70℃ (170 to 265 VAC), natural air cooling: −10 to +55℃ (100%): +70℃ (60%)				
Operating ambient humidity		30 to 90% RH (no dew condensation)				
Storage temperature		−30 to +85℃				
Storage humidity		10 to 95% RH (no dew condensation)				
Cooling system		Natural air cooling				
Dielectric strength		Between input and output: 3.0 kVAC, between input and FG: 2.0 kVAC (20 mA), between output and FG: 500 VAC (100 mA) for one minute each				
Insulation resistance		100 MΩ or higher at 500 VDC between output and FG (25℃, 70%RH)				
Vibration resistance		IEC rail mounted state (non-operation), 9.8 m/s² or less (sweeping for 1 minute at 10 to 55 Hz, constant at 9.8 m/s², 1 hour each in X, Y, and Z direction)				
Shock resistance		196 m/s² or less				
Safety standards and CE marking	(Note 11)	UL60950 certified, CSA60950 certified, EN60950 certified, UL508 certified, CSA C22.2 No.14 certified, EN50178 CATEGORYⅢ certified,and compliant with Electrical Appliances and Materials Safety Act and the Low Voltage Directive				
EMI (Electro-Magnetic Interference)		Complies with VCCI-B, FCC-B, and EN55011/EN55032-B.				
Immunity (Electro-Magnetic Susceptibility)		Complies with IEC61000-6-2 (IEC61000-4-2, -3, -4, -5, -6, -8, -11).				
Weight (Typ.)		470 g	540 g	540 g	780 g	1,000 g
External dimensions [mm]		50 × 97 × 110	60 × 97 × 110	60 × 97 × 110	80 × 97 × 110	120 × 97 × 110

(Note 1) The values shown above are for the input of 100/230 VAC, Ta = 25˚C, and the maximum output power.
(Note 2) The rated input voltage ranges when application is made to obtain an approval for safety standards (UL, CSA, and EN) are as follows:
CY307 to CY312: 100 to 120 VAC/200 to 240 VAC (50/60 Hz)
CY318 and CY324: 100 to 240 VAC (50/60 Hz)
(Note 3) The input inrush current (0.2 ms or less) to the built-in noise filter is excluded. Power thermistor method is used.
(Note 4) Refer to various characteristic measurement circuits. The measurement method complies with JEITA Standard RC-9131. (100 MHz)
(Note 5) The values shown above for CY307 to CY 312 are for the input voltage of 85 to 132 VAC/170 to 265 VAC with a constant load. The values shown above for CY318 and CY 324 are for the input voltage of 85 to 265 VAC with a constant load.
(Note 6) The value shown above is for a load from no-load to full-load with a constant input.
(Note 7) CY307 is a foldback current limiting automatic recovery type. CY310 to CY324 are constant current/voltage limiting automatic recovery types.
(Note 8) Output interrupt manual reset type
(Output is recovered by turning ON the input again.)
(Note 9) For 100 VAC, the value indicates a value measured in compliance with the Electrical Appliance and Material Safety Act. For 230 VAC, the value indicates a value measured in compliance with the UL, CSA, and EN standards.
(Note 10) The output derating is for the standard mounting method.
(Note 11) Complies with the Electrical Appliance and Material Safety Act at the input voltage of 100 VAC.

■ Output Derating for the Standard Mounting Method

CY307, 310, 312, 318

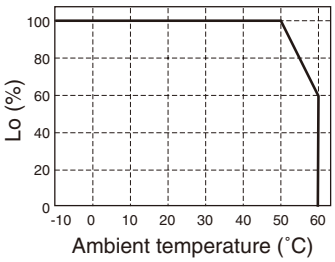

CY324

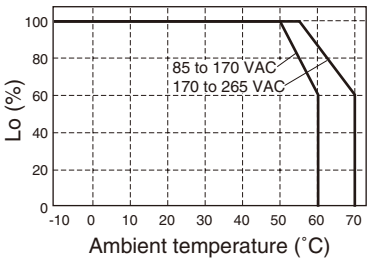

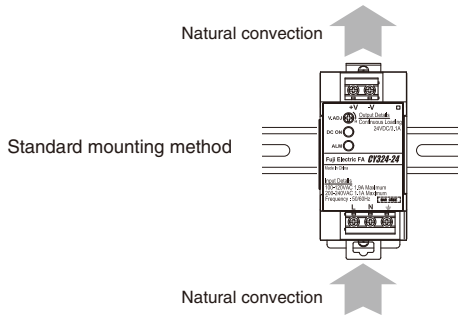

■ External Dimension Drawings and Connection Diagrams [unit: mm]

● CY307-24

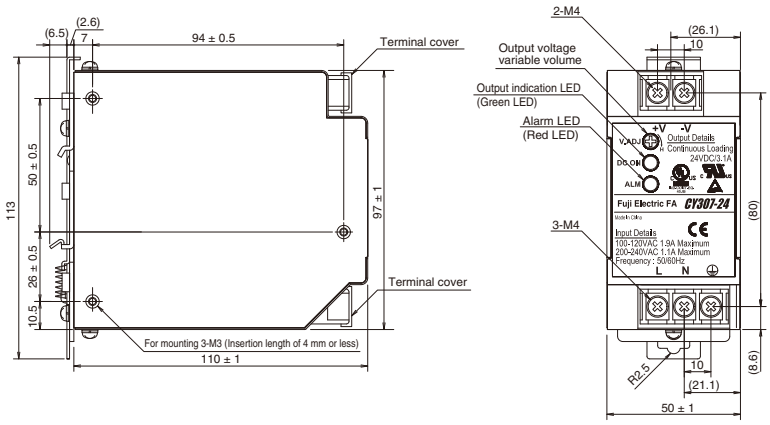

● CY310-24

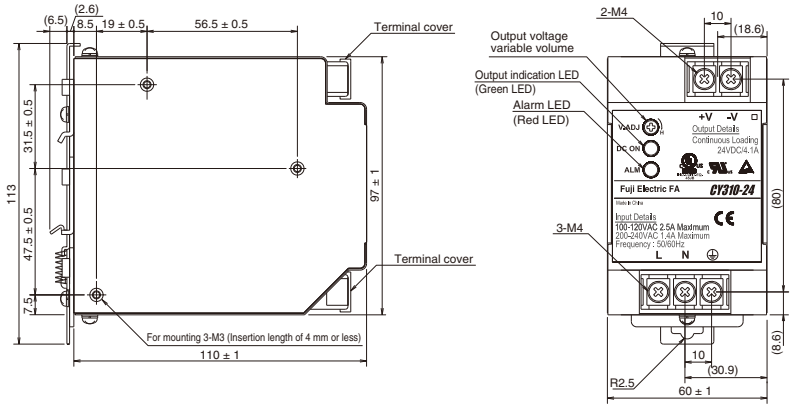

● CY312-24

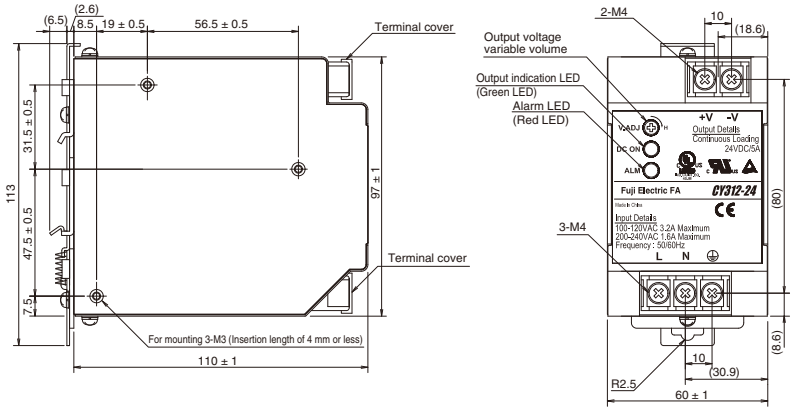

● CY318-24

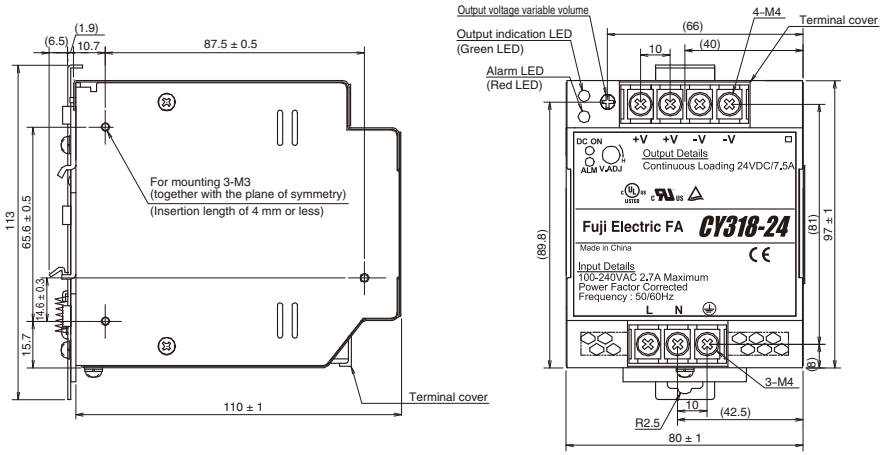

Switching Power Supplies
Rail Mounting Type CY3 Series

● CY324-24

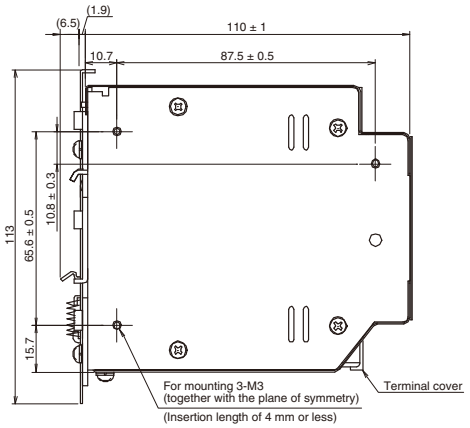

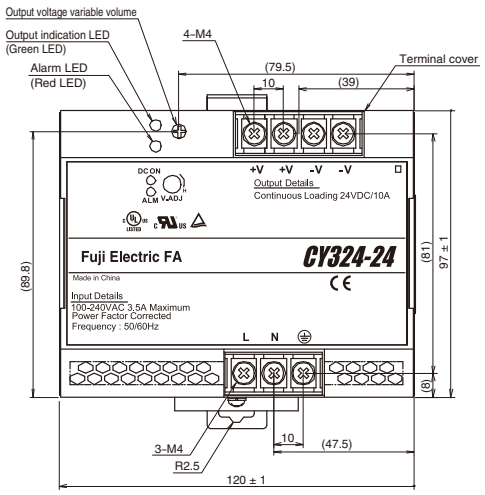

■ Connection Diagrams

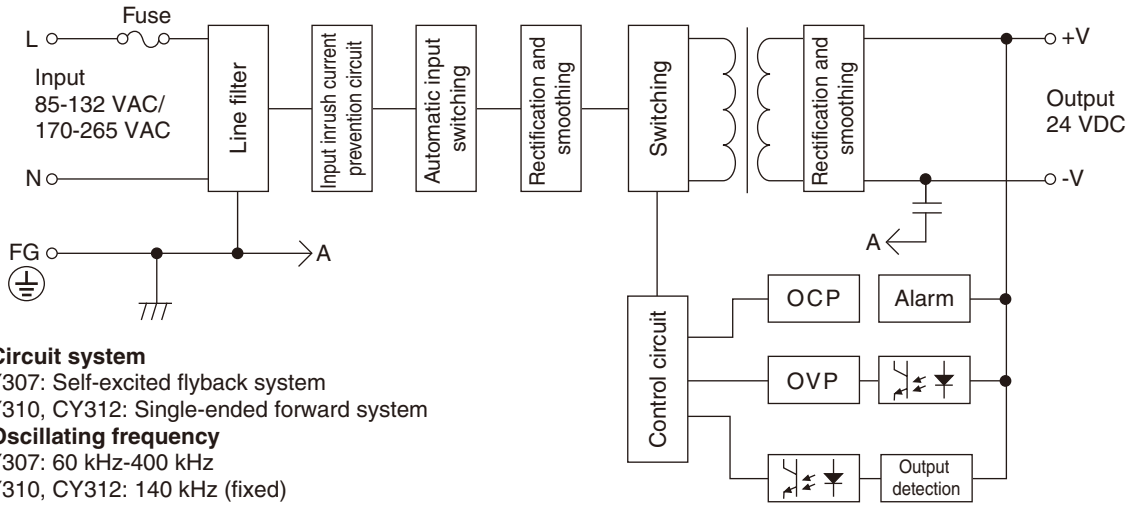

●Circuit system
CY307: Self-excited flyback system
CY310, CY312: Single-ended forward system
●Oscillating frequency
CY307: 60 kHz-400 kHz
CY310, CY312: 140 kHz (fixed)
●Circuit board
Glass composite (CEM-3)

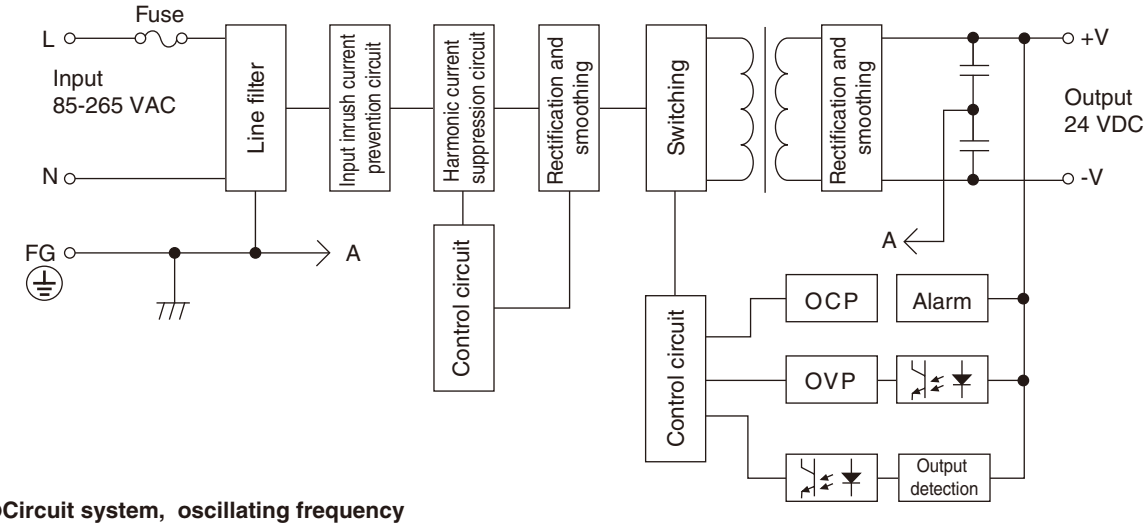

●Circuit system, oscillating frequency
Switching circuit: Single-ended forward system (CY318: fixed at 110 kHz, CY324: fixed at 95 kHz)
Harmonic current suppression circuit: Active filter system (CY318: fixed at 75 kHz, CY324: fixed at 70 kHz)
●Circuit board
Glass composite (CEM-3)

■ CY3 Series Handling Instruction (Read these before use.)

Be sure to read these handling instructions before using this product.
Pay careful attention to the precautions when using the product. Incorrect usage could lead to an electric shock, damage to the product or a fire hazard.

Warnings

- Do not modify or disassemble the product and do not remove the cover. Doing so may cause an electric shock. It must be noted that Fuji Electric bears no responsibility for the product once it is fabricated or modified.
- There are high-pressure or high-temperature parts inside the product. Touching them may cause an electric shock or burn.
- Do not bring your face or hands close to the product while power is turned ON. An unforeseen situation may cause a injury.
- Do not touch the product while the power is ON or immediately after the power is turned OFF. Heat is radiated from the surface of the case. Touching the case may cause a burn due to high temperature.

Cautions

- This product is a power supply for office equipment.
- Avoid using the product under an overload or output short-circuit condition for 30 seconds or longer. Doing s may cause smoke, file, damage, or insulation failure.
- Use the product within the ratings for the input voltage, output current, output power, ambient temperature, and ambient humidity as specified in the specifications.
  Using the product outside the ratings specified in the specifications may cause damage to the product.
- The product may malfunction or fail due to an accidental or unpredictable circumstance. Therefore, when using the product for applied equipment that requires an extremely high reliability (nuclear-related equipment, traffic control equipment, medical equipment, etc.), be sure to provide a failsafe function in the equipment side.
- The output voltage of the CY324-24 is regarded as a hazardous energy level (power of 240 VA or higher at the voltage of 2 V or higher). Therefore, take protective measures to prevent users from coming in contact with the product. Any device that incorporates this product must be protected so that a tool or other object that is accidentally dropped by a service technician or during maintenance will not come in contact with the terminals of this product. Before performing repair work, be sure to turn OFF the input power supply and make sure that the input and output terminal voltage of this product has dropped to a safe level.

- Classified as overvoltage category III specified in EN50178.

1. Description of Terminals

1 Description of Terminals

●CY307-24

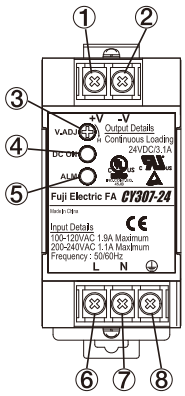

●CY310-24
●CY312-24

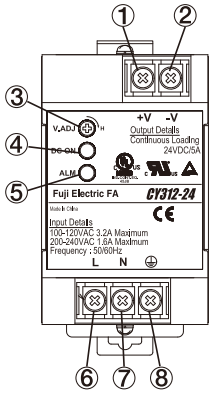

●CY318-24

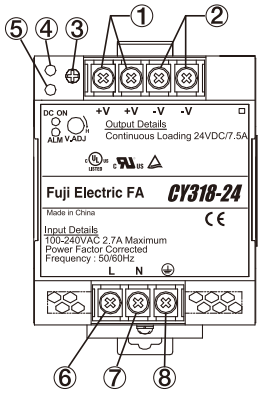

●CY324-24

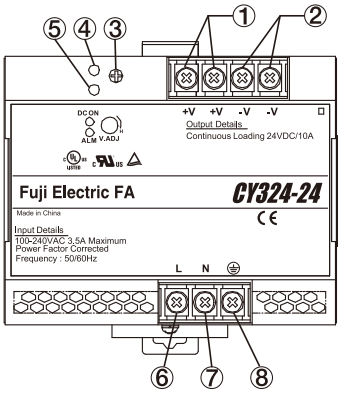

① + V: + output terminal
② –V: – output terminal
③ V.ADJ: Output voltage variable volume (Turn it clockwise to increase the output voltage.)
④ DC ON: Output indication LED (Lit in green when power is output.)
⑤ ALM: Alarm LED (Lit in red when output voltage drops.)
⑥ L: Input terminal live line (Fuse is built in.)
⑦ N: Input terminal neutral line
⑧ FG: Protective ground terminal (Frame ground)

2 Terminal Connection Method

Pay careful attention to input wiring. If terminals are connected incorrectly, the power supply may fail.
- Make sure that the input is interrupted before connecting the input and output lines.
- Connect the protective ground terminal to the ground terminal of the device or equipment.
- Separate the input line from the output line when wiring them. Noise immunity will be improved.

●CY307-24
●CY310-24
●CY312-24

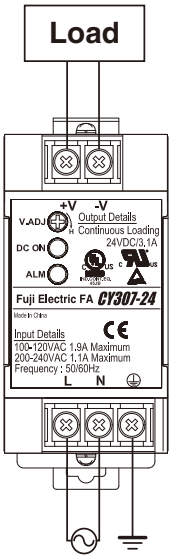

●CY318-24
●CY324-24

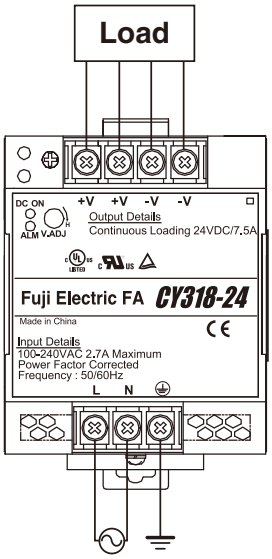

- Recommended tightening torque: 1.27 N・m (13 kg・cm)
- Recommended wire diameter: AWG12 to AWG20 (0.5 to 3.5 mm^2)

D2

2. Description of Functions and Precautions

1 Input Voltage

● CY307, CY310, and CY312:
The input voltage range is single phase 85 to 132 VAC or 170 to 265 VAC (47 to 63 Hz). The input circuit is automatically switched depending on the input voltage. The rated input voltage range when application is made to obtain an approval for safety standards is 100 to 120 VAC/200 to 240 VAC (50/60 Hz). When switching the input voltage from the 100-V system to the 200-V system, interrupt the input for several seconds and then switch the input voltage system. Be careful not to switch to the 200-V system while operating under the 100-V system. Doing so may cause damage to the power supply.
● CY318, and CY324:
The input voltage range is single phase 85 to 265 VAC (47 to 63 Hz) or 120 to 370 VDC. The rated input voltage range when application is made to obtain an approval for safety standards is 100 to 240 VAC (50/60 Hz).
● Common:
Be careful not to apply an input voltage outside the specified range. Doing so may cause damage to the power supply. Do not connect the large-capacity inductance to the input line. Doing so will cause unstable operation.

2 Output Voltage Variable Range

The output voltage can be changed using the V.ADJ volume on the front panel. The output voltage variable range is 21.6 V to 28 V. Turn the volume clockwise to increase the output voltage. It must be noted that, if the output voltage is raised too high, the overvoltage protection function (OVP) will operate to interrupt the output. When the output voltage is raised, use the output power of the power supply below the specified output power level.

3 Input Inrush Current

An input inrush current prevention circuit is built in. The input inrush current increases at high ambient temperature or when the input is cycled after the power is turned ON because a power thermistor is used. Be careful when selecting an input switch or external fuse.

4 Overvoltage Protection (OVP)

An output interrupt manual reset type is used. It operates within 30 to 35 V and interrupts the output. When the OVP is actuated, interrupt the input temporarily and, after several minutes, turn ON the input again to recover the output. The setting of the OVP is fixed and cannot be changed.

5 Overcurrent Protection (OCP)

CY307 is a foldback current limiting automatic recovery type and CY310 to CY324 are constant current/voltage limiting automatic recovery types. The OCP function operates when the current becomes 105% or higher of the maximum DC output current. When the overcurrent or short-circuit state is released, output is automatically recovered. Avoid using the product under an overcurrent or output short-circuit condition for 30 seconds or longer. Failure to follow this instruction may cause damage to the power supply.
CY307 has the foldback current limiting characteristic as shown in the following figure. Therefore, when a non-linear load such as a lamp or motor or a constant current load is connected, the output voltage may not rise at the startup.

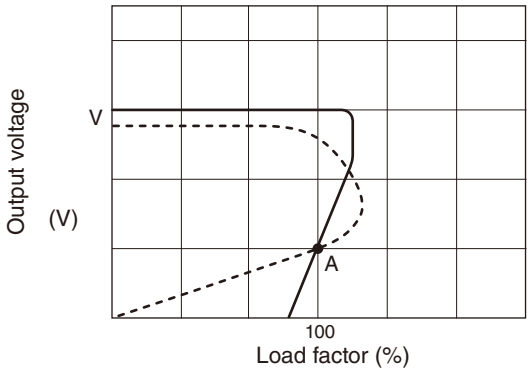

——— : Power supply load characteristics
- - - - - - : Load side characteristics
(lamp, motor, constant current load, etc.)

Note) In case of a lamp, motor, constant current load, etc., the rise may stop at point A.

6 Alarm Indication

When the OCP is actuated and if the output voltage drops to approximately 20 V or less, the red ALM LED is lit. Under the output short-circuit state, the green LED for DC ON goes out and only the red ALM LED lights up. Therefore, it is easy to judge whether the fault is in the load side or in the power supply side when the output voltage is low or zero.

Power supply operation state	Normal output	Overload state	Insufficient input voltage	Output short-circuited	Output stopped*
DC ON (Green LED)	Lit	Lit	Lit	Not lit	Not lit
ALM (Red LED)	Not lit	Lit	Lit	Lit	Not lit

* When the OVP is actuated, it indicates a state that no power supply is output due to no input voltage or other reasons.

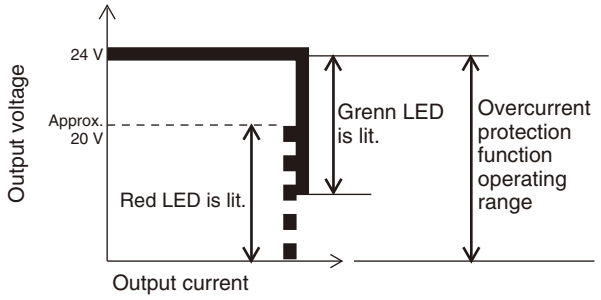

7 Output Ripple/Noise

The maximum ripple/noise voltage specified in the specifications is a value measured in the specified measurement circuitry (according to JEITA: RC-9131). If the load line becomes long, connect an electrolytic capacitor, film capacitor, etc, to the load end to suppress the ripple and noise at the load end. Note that an accurate measurement cannot be made if the probe ground of the oscilloscope used in the measurement is too long.

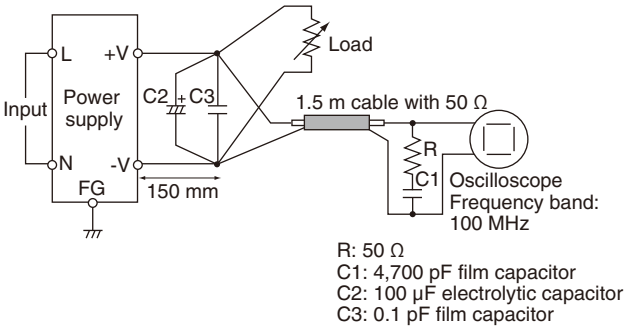

8 Series Operation

Series operation is possible as shown in the following figures (A) and (B).

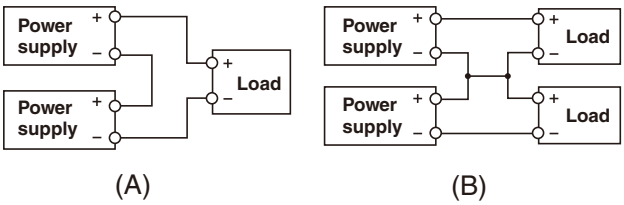

(A) (B)

9 Parallel Operation

(A) Parallel operation cannot be used to increase the output current.

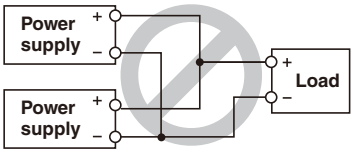

(B) Possible to connect them as a backup power supply.

1. Set the power supply output higher by the amount of forward voltage (VF) of the diode.
2. Set the output voltage to the same value.
3. Use the output voltage and output power of the power supply within the ratings specified in the specifications.

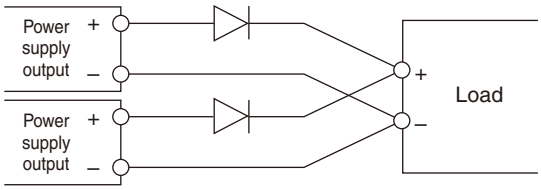

10 Insulation Resistance Test

The insulation resistance between the output and FG is 100 MΩ or higher at 500 VDC.
For the sake of safety, set the voltage of the DC insulation tester before the insulation resistance test and use a resistor or other device to perform proper discharging after the test.

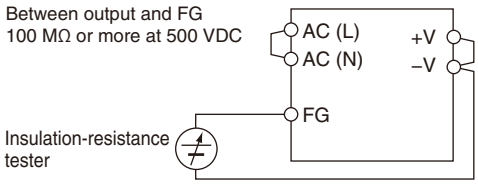

11 Dielectric Strength Test

The specification requires that the product should withstand for one minute each under an application of 3.0 kVAC between the input and output, 2.0 kVAC between the input and FG, and 500 VAC between the output and FG. Set the limit value of the withstand voltage tester to 20 mA (100 mA between the output and FG) first and then perform the test. When applying test voltage, increase the test voltage gradually from zero and, when interrupting, gradually decrease the voltage. If the test time is controlled by a timer, high impulse voltage occurs when test voltage is applied or interrupted and may damage the power supply. When performing the test, connect the input side and output side respectively as shown below. In a test is performed with the output side left open, output voltage may occur momentarily.

Between input and output (broken line)
3 kVAC for 1 minute (20 mA)
Between input and FG (solid line)
2 kVAC for 1 minute (20 mA)

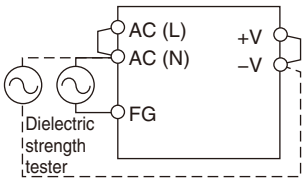

Between output and FG
500 VAC for 1 minute (100 mA)

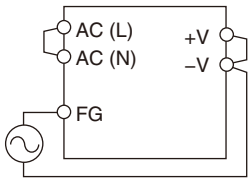

Dielectric strength tester

D2

3. Mounting Precautions

This product can be mounted on a TS type IEC rail with a width of 35 mm. When mounting the product, hook the section A onto one edge of the rail and push in toward the direction B so that the rail stopper can be firmly fit in the DIN rail. When removing the product, push down the section C or insert a screwdriver in the section D to separate it off the rail.

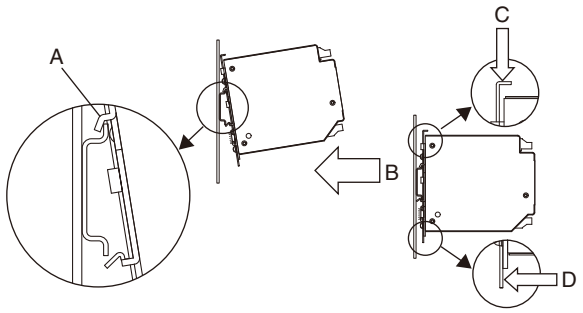

Provide a space of 25 mm or more above and below the power supply to allow natural convection to prevent heat from accumulating around the power supply.
When using multiple products side by side, provide a space of 20 mm or more between power supplies.

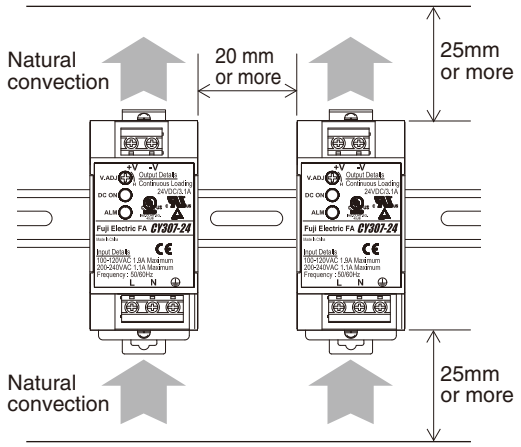

4. Wiring

(1) Be sure to separate the input line from the output load line when wiring them. Noise immunity will be improved by twisting the wire.
(2) Use a short, thick wire to minimize impedance.
(3) Attaching a capacitor to the load end is an effective way to eliminate the noise.
(4) Inserting a toroidal core or clamp core in the wiring is an effective way to reduce EMI.
(5) Using a thick wire, connect the FG terminal to the ground terminal of the equipment or device to which the power supply is mounted for the sake of safety and also for removing the noise.
(6) Use the following wiring method for preventing electric shock so that the terminal specifications of this product comply with EN60529 IP20.

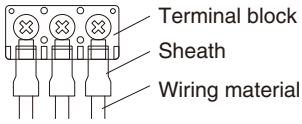

5. External Fuse Capacity

When attaching an external fuse to the power supply, use a fuse with the capacity shown in the table to the right.

CY307	CY310	CY312	CY318	CY324
5 A	5 A	5 A	5 A	6.3 A

6. Before Judging It To Be a Failure

(1) Is the specified voltage applied?
(2) Are wires to the input and output terminals connected correctly?
(3) Are wires too thing?
(4) Is the output voltage adjustment volume turned too much?
If it is turned too much, the overvoltage protection function will operate to interrupt the output.
(5) Are the output current and output power used beyond the values specified in the specifications?
(6) Is the input voltage waveform a sine wave alternative current? If an UPS is connected and the input voltage waveform is not a sine wave, noise may occur in the power supply.
(7) Noise may occur in the power supply depending on the frequency with fluctuating load.
(8) Is a large-capacity inductance connected to the input line? Connecting a large-capacity inductance will cause unstable operation.

7. Scope of Warranty (3 Years)

The scope of warranty shall be limited to normal use based on the following usage conditions.
(1) Average operating temperature of 40˚C or less (temperature surrounding the product).
(2) Average load factor of 80% or less
(3) Mounting method: Standard mounting. The maximum rating must be within the output derating value.

The following items are excluded from the warranty.
(1) When the product failure occurs due to inappropriate handling such as dropping the product, giving an impact to the product, etc. or using the product beyond the conditions specified in the specifications.
(2) When the product failure occurs due to fire, flood disaster, or extraordinary natural phenomenon.
(3) When the product failure occurs due to modification, repair, or fabrication of the product made by a third party other than Fuji Electric or a company authorized by Fuji Electric or due to a cause that cannot be regarded as the responsibility of Fuji Electric.

Disconnecting Switches, Power fuses, Air load break switches, Instrument transformers

E

Page

Disconnecting Switches

V and RF type E1-1
Dimensions E1-3
Operating mechanism E1-9

Power Fuses

General information E1-10
Applications E1-11
General purpose fuses SCF, HF, SCH E1-17
Back-up fuses JR, HF E1-18
Characteristic curves E1-19
Dimensions E1-22

Air Load Break Switches

General information E1-26
Accessories/LB type E1-28
Accessories/LBS type E1-29
Dimensions E1-31

Instrument Transformers

VT, CT
- General information E1-37
- Types and ratings E1-39
- Dimensions E1-42

ZCT, EVT, special purpose CT
- General information E1-46
- Specifications E1-47
- Dimensions E1-48

MINIMUM ORDERS

Orders amounting to **less than ¥10,000** net per order will be charged as ¥10,000 net per order plus freight and other charges.

WEIGHTS AND DIMENSIONS

Weights and dimensions appearing in this catalog are the best information available at the time of going to press. FUJI ELECTRIC FA has a policy of continuous product improvement, and design changes may make this information out of date.
Please confirm such details before planning actual construction.

INFORMATION IN THIS CATALOG IS SUBJECT TO CHANGE WITHOUT NOTICE.

Disconnecting switches V and RF-type

■ Description

Rated voltage: 7.2 – 36kV
Rated current: Up to 4000 Amps
Indoor use
FUJI middle voltage disconnecting switches comprise the V and RF types. The small size and lightness of the V type disconnecting switches make them highly suitable for cubicle use. They make use of FUJI's specially designed coil spring, a line-contact and ball contact (RF type) system which gives them a high efficient operation without overheating.
V type disconnecting switches are not provided with latches but their design will not permit them to be opened by magnetic force. Switches provided with latches can also be supplied upon request.

■ Features

- 7.2/12/24/36kV, 200 Amps to 4000 Amps
- Withstand large momentary current flow
- Excellent contact performance
- Compact and light in weight
- Heavy-duty construction
- Stick-operated/gang-operated/motor operated types

■ Ordering information

Specify the following:
1. Type number
2. Rated voltage and current
3. Connection system
4. Operation system
5. Auxiliary contact arrangement

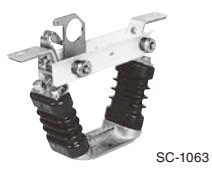

V-2

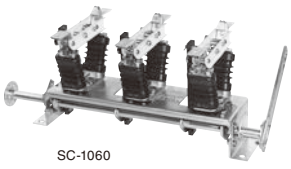

V3-2

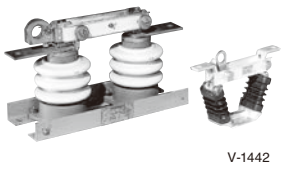

RF240cI

■ Type number nomenclature

● V type/7.2kV

V □ - 2

Basic type

No. of poles
Blank: 1-pole
Stick-operated type only
3: 3-pole
Stick-, manual remote- and motor remote-operated
(AC/DC common use)

Rated current
2: 200A
4: 400A
6: 600A
12: 1200A

● V type/12kV, 24kV

V 3 - 20 / 600 □

Basic type

No. of poles
3: 3-pole

Rated voltage
20: 12/24kV

Rated current
600: 600A
1200: 1200A

Operating system
Blank: Stick-operated
G: Manual or motor remote-operated

● RF240 type

RF240c III / 6 / 2000 □□ (F-F)

Basic type

No. of poles
I: 1-pole
III: 3-pole

Rated voltage
6: 7.2kV
20: 12/24kV
30: 36kV

Rated current
600: 600A
1200: 1200A
2000: 2000A
4000: 4000A

Connection
F-F, F-B, B-F, B-B
Refer to page E1-3

Auxiliary switch
Blank: Not provided
W: Provided
Specify the contact arrangement

Operating system
Blank: Stick-operated
G: Manual remote-operated by R290-B
Motor remote-operated by R293B
GS: Manual remote-operated by R277
(4000A only)

Disconnecting switches
V and RF-type

■ Specifications

No. of poles	Ratings Voltage (kV)	Current (A)	Short-time withstand current (kA)	Connection	Auxiliary switch	Type	Ordering code	Mass (kg)
1	3.6/7.2	200	12.5 (1 sec) *3	Common use	Not available	**V-2** *2	HV3V-200 *2	1.2
		400	12.5 (1 sec) *3			**V-4** *2	HV3V-400 *2	1.2
		600	12.5 (1 sec) *3			**V-6** *2	HV3V-600 *2	1.8
			25 (2 sec) *4					
		1200	31.5 (2 sec) *4			**V-12** *2	HV3V-12X *2	2.8
3	3.6/7.2	200	12.5 (1 sec) *3	Common use	2NO+2NC sold separately	**V3-2**	HV3W-200	10
		400	12.5 (1 sec) *3			**V3-4**	HV3W-400	10
		600	12.5 (1 sec) *3			**V3-6**	HV3W-600	11
			25 (2 sec) *4					
		1200	31.5 (2 sec) *4			**V3-12**	HV3W-12X	14
1	3.6/7.2	2000	32 (2 sec)	F-F	Not available	**RF240cI/6/2000(F-F)**	HV3A3-20XA	22
				B-B		**RF240cI/6/2000(B-B)**	HV3A3-20XB	55
				B-F		**RF240cI/6/2000(B-F)**	HV3A3-20XD	43
				F-B		**RF240cI/6/2000(F-B)**	HV3A3-20XC	43
	3.6/7.2	4000	44 (2 sec)	F-F		**RF240cI/6/4000(F-F)**	HV3A4-40XA	35
3	3.6/7.2	2000	32 (2 sec)	F-F	2NO+2NC to 6NO+6NC *1 available on request	**RF240cIII/6/2000(F-F)**	HV3B3-20XA■ *1	75
				B-B		**RF240cIII/6/2000(B-B)**	HV3B3-20XB■ *1	170
				B-F		**RF240cIII/6/2000(B-F)**	HV3B3-20XD■ *1	140
				F-B		**RF240cIII/6/2000(F-B)**	HV3B3-20XC■ *1	140
	3.6/7.2	4000	44 (2 sec)	F-F		**RF240cIII/6/4000(F-F)**	HV3B4-40XA■ *3	120
1	12/24	600	22 (2 sec)	F-F	Not available	**RF240cI/20/600(F-F)**	HV3A1-600A	27
				F-B		**RF240cI/20/600(F-B)**	HV3A1-600C	33
				B-F		**RF240cI/20/600(B-F)**	HV3A1-600D	33
				B-B		**RF240cI/20/600(B-B)**	HV3A1-600B	35
	12/24	1200	27 (2 sec)	F-F		**RF240cI/20/1200(F-F)**	HV3A2-12XA	33
				F-B		**RF240cI/20/1200(F-B)**	HV3A2-12XC	36
				B-F		**RF240cI/20/1200(B-F)**	HV3A2-12XD	36
				B-B		**RF240cI/20/1200(B-B)**	HV3A2-12XB	41
	12/24	2000	32 (2 sec)	F-F		**RF240cI/20/2000(F-F)**	HV3A3-20XA	32
				F-B		**RF240cI/20/2000(F-B)**	HV3A3-20XC	62
				B-F		**RF240cI/20/2000(B-F)**	HV3A3-20XD	62
				B-B		**RF240cI/20/2000(B-B)**	HV3A3-20XB	70
	12/24	4000	44 (2 sec)	F-F		**RF240cI/20/4000(F-F)**	HV3A4-40XA	70
3	12/24	600	22 (2 sec)	Common use	2NO+2NC sold separately	**V3-20/600**	HV7W-600	40
		1200	27 (2 sec)			**V3-20/1200**	HV7W-12X	45
	12/24	2000	32 (2 sec)	F-F	2NO+2NC to 6NO+6NC *1 available on request	**RF240cIII/20/2000(F-F)**	HV3B3-20XA■ *1	130
				F-B		**RF240cIII/20/2000(F-B)**	HV3B3-20XC■ *1	140
				B-F		**RF240cIII/20/2000(B-F)**	HV3B3-20XD■ *1	140
				B-B		**RF240cIII/20/2000(B-B)**	HV3B3-20XB■ *1	150
	12/24	4000	44 (2 sec)	F-F		**RF240cIII/20/4000(F-F)**	HV3B4-40XA■ *1	170
1	36	600	22 (2 sec)	F-F	Not available	**RF240cI/30/600**	HV3A1-600A	34
		1200	27 (2 sec)			**RF240cI/30/1200**	HV3A2-12XA	40
		2000	32 (2 sec			**RF240cI/30/2000**	HV3A3-20XA	48
3	36	600	22 (2 sec)	F-F	2NO+2NC to 6NO+6NC *1	**RF240cIII/30/600**	HV3B1-600A■ *1	135
		1200	27 (2 sec)			**RF240cIII/30/1200**	HV3B2-12XA■ *1	150
		2000	32 (2 sec)			**RF240cIII/30/2000**	HV3B3-20XA■ *1	180

Note: *1 Auxiliary switch (contact arrangement 2NO+2NC to 6NO+6NC) is available on your request (3-pole only), in this case replace the ■ mark by W and specify required contact arrangement as follow.
2NO + 2NC : W=2A2B, 3NO + 3NC: W=3A3B, 4NO + 4NC: W=4A4B, 6NO + 6NC: W=6A6B
*2 When requiring V type with mechanical latch, specify type VS (example VS-2). (Specify L in ordering code.)
*3 This conforms to JIS C4606
*4 This conforms to JEC-2310

■ Auxiliary switches

3-pole V-type disconnecting switches can be fitted with auxiliary switches. The AUX-1 auxiliary switch kits, which are sold separately can easily be fitted on side. In the case of 3-pole RF type disconnecting switches if you order auxiliary switches they will be fitted at the FUJI factory before shipment. When ordering make sure that “W” is suffixed to the type number.

Type	Contact	Mass (kg)
AUX-1	2NO+2NC 100/110V DC 15A 200/220V AC 15A	V3-2, V3-4, V3-6, V3-12, V3-20

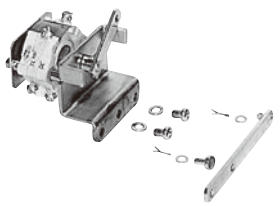

SE-1953

■ Technical data

Type	No. of poles	Rated voltage (kV)	Dielectric strength (AC rms 1 min.) (kV)		Impulse (1.2 × 50μs) (kV)	
			To ground	Between poles	To ground	Between poles
V RF240cI/6	1	7.2	22	35	60	70
V3 RF240cIII/6	3	7.2	22	35	60	70
RF240cI/20	1	12/24	50	80	125	145
V3-20 RF240cIII/20	3	12/24	50	80	125	145
RF240cI/30	1	36	70	110	170	195
RF240cIII/30	3	36	70	110	170	195

■ Connection

Type	V, V3	RF240			
Connection		F-F	B-B	B-F	F-B

■ Dimensions, mm

V-2, 4

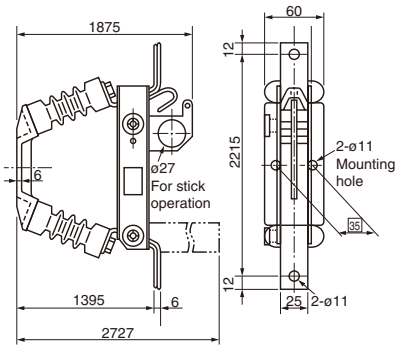

V-6

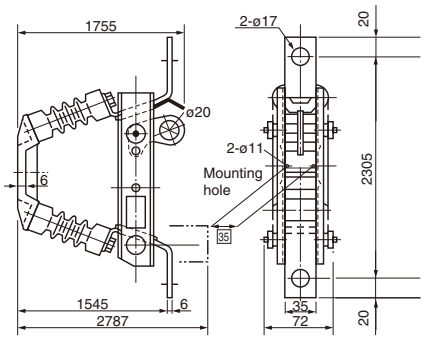

V-12

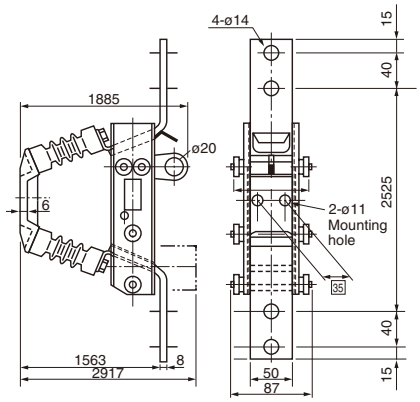

■ Ordering code system, type V

HV 3 V – 200

Disconnecting switch

Rated voltage
3: 7.2kV
7: 12/24kV

No. of poles
V: 1 pole
L: 1 pole, type VS
W: 3 pole

Rated current
200: 200A
400: 400A
600: 600A
12X: 1200A

■ Ordering code system, type RF

HV 3 A 2 – 600 A ■

Disconnecting switch

Rated voltage
7.2kV: 3
12/24kV: 7
36kV: 8

No. of poles
1 pole: A
3 pole: B

Rated current
600A: 1-600
1200A: 2-12X
2000A: 3-20X
4000A: 4-40X

Aux. switch
Blank: Not provided
W: Provided
Specify the contact arrangement,
W=2A2B: 2NO+2NC
W=3A3B: 3NO+3NC
W=4A4B: 4NO+4NC
W=6A6B: 6NO+6NC

Connection
F-F: A
B-B: B
B-F: D
F-B: C

E1

Disconnecting switches
RF-type

■ Dimensions, mm

RF240cI/20, 30/600 (F-F)

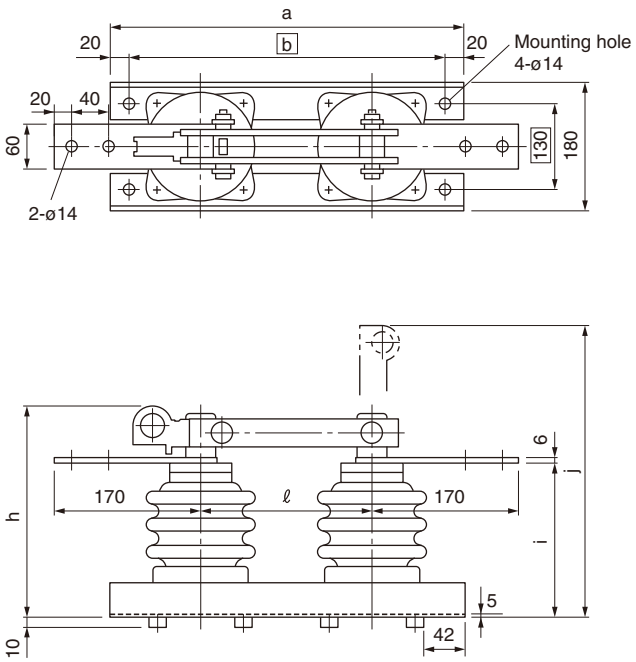

Type	a	b	h	i	j	ℓ
RF240cI/20/600	545	505	335	269	685	300
RF240cI/30/600	645	605	432	360	889	410

RF240cI/20, 30/1200 (F-F)

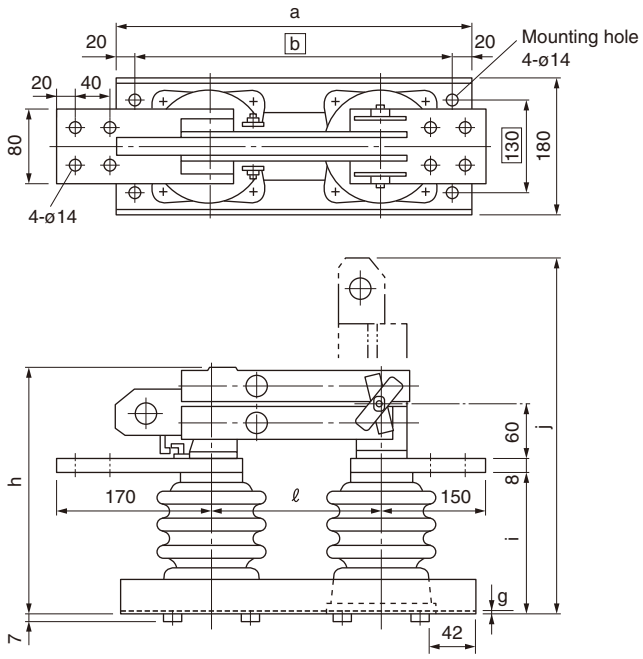

Type	a	b	h	i	j	ℓ	g
RF240cI/20/1200	545	505	376	260	723	300	5
RF240cI/30/1200	645	605	466	350	923	410	6

RF240cI/6 – 30/2000 (F-F)

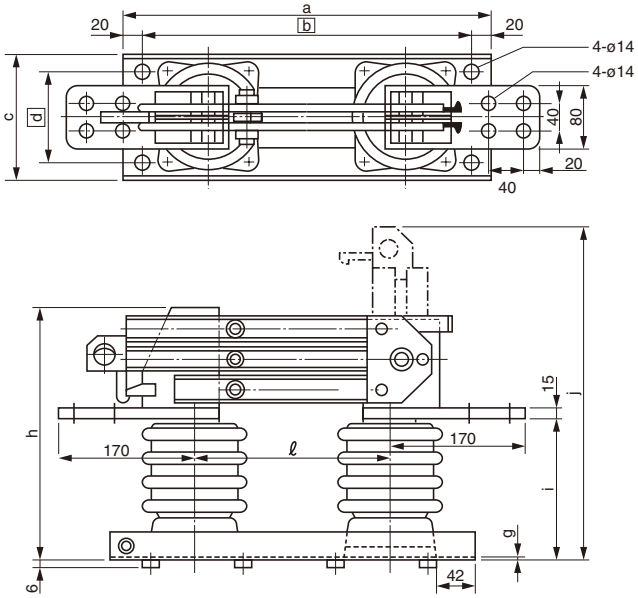

Type	a	b	c	d	h	i	j	ℓ	g
RF240cI/6/2000	390	350	139	95	305	155	570	190	5
RF240cI/20/2000	535	495	180	130	410	261	786	300	6
RF240cI/30/2000	645	605	180	130	500	351	986	410	6

RF240cI/6, 20/4000 (F-F)

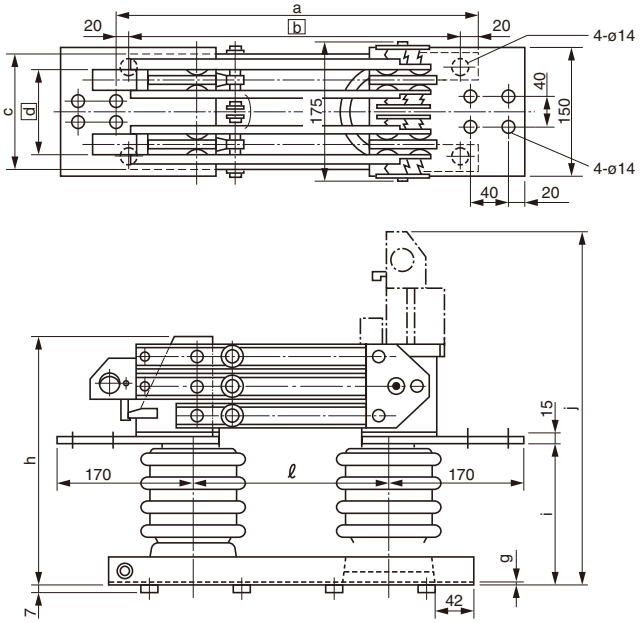

Type	a	b	c	d	h	i	j	ℓ	g
RF240cI/6/4000	390	350	139	95	305	155	570	190	5
RF240cI/20/4000	535	495	180	130	411	261	786	300	6

■ Dimensions, mm

Gang-operating — V3 type
V3-2, V3-4

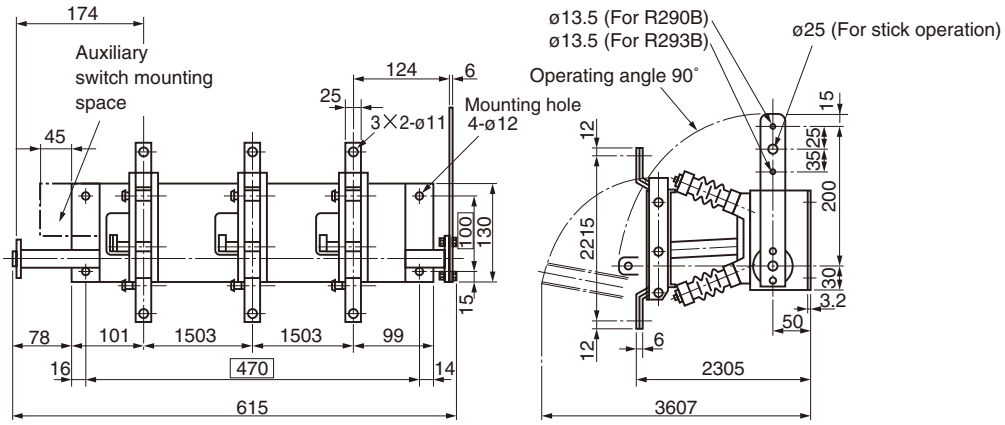

V3-6

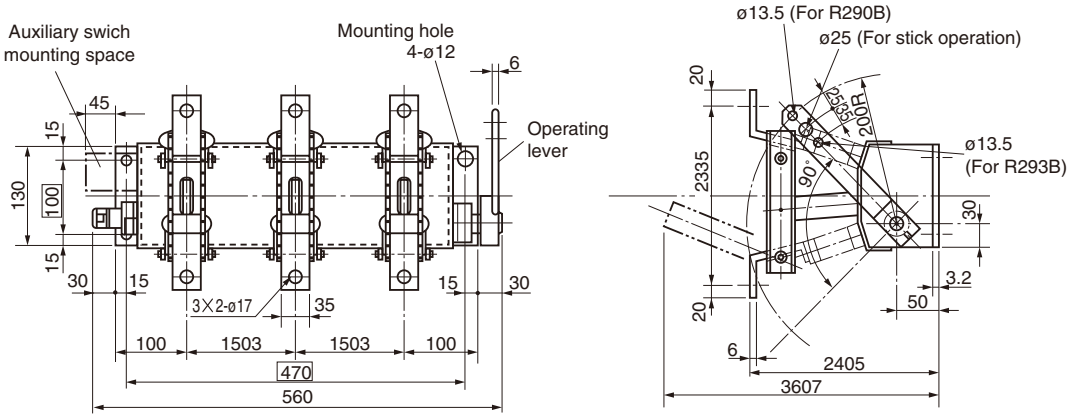

V3-12

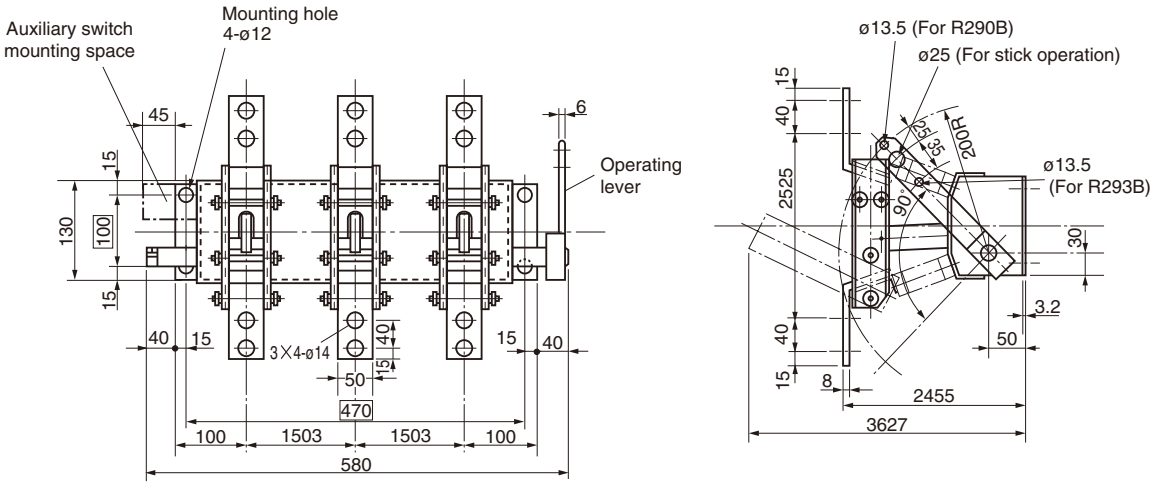

Note : ▭ : Mounting hole dimensions

Disconnecting switches
RF-type

■ Dimensions, mm

V3-20/600

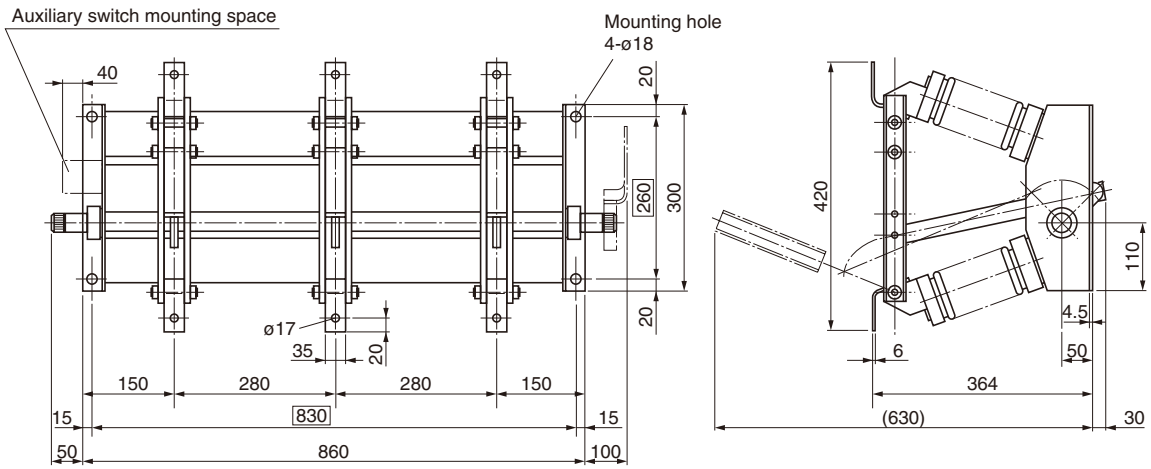

V3-20/1200

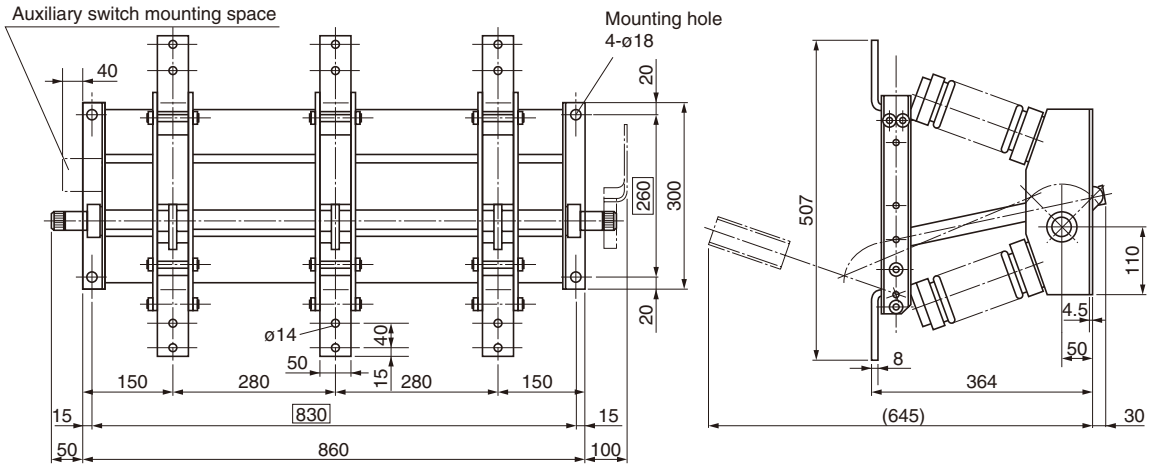

■ Dimensions, mm

RF240cⅢ/30/600 (F-F)

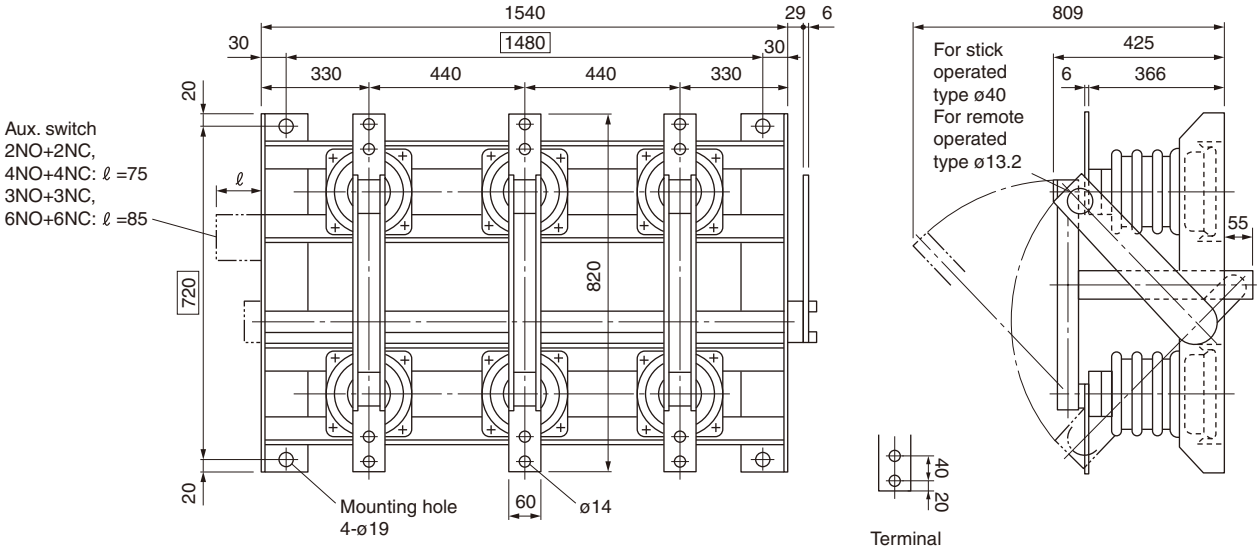

RF240cⅢ/20, 30/1200 (F-F)

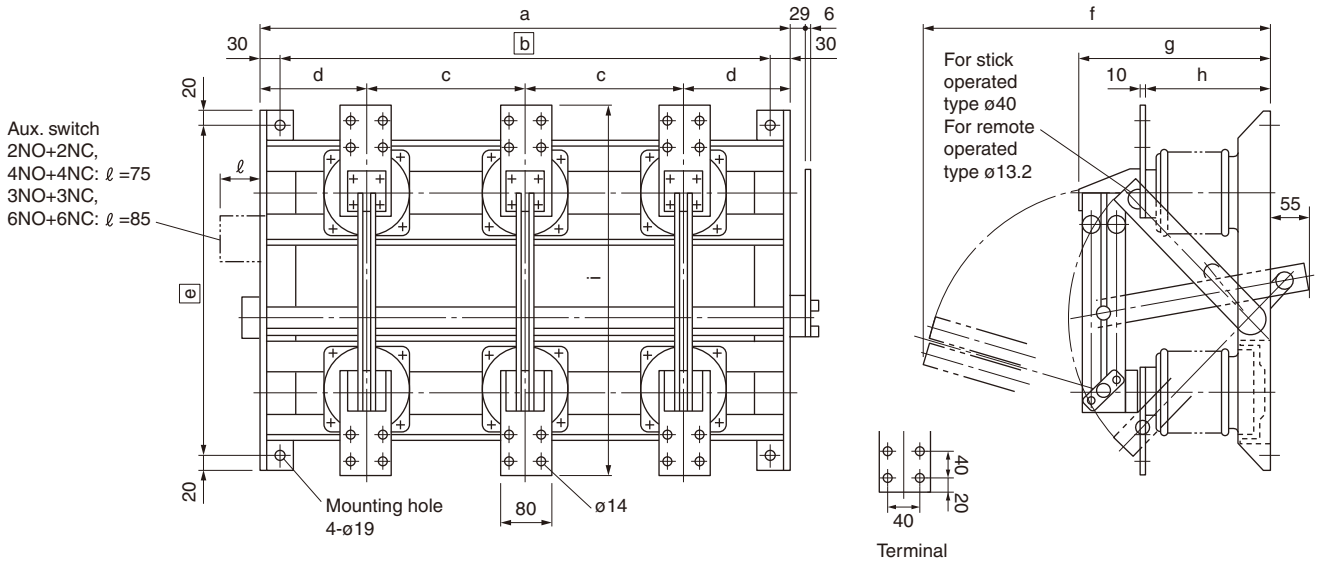

Type	a	b	c	d	e	f	g	h	i
RF240cⅢ/20/1200	1160	1100	340	240	630	690	376	266	700
RF240cⅢ/30/1200	1540	1480	440	330	720	868	466	356	780

Disconnecting switches
RF-type

■ Dimensions, mm

RF240c|||/6 – 30/2000 (F-F)

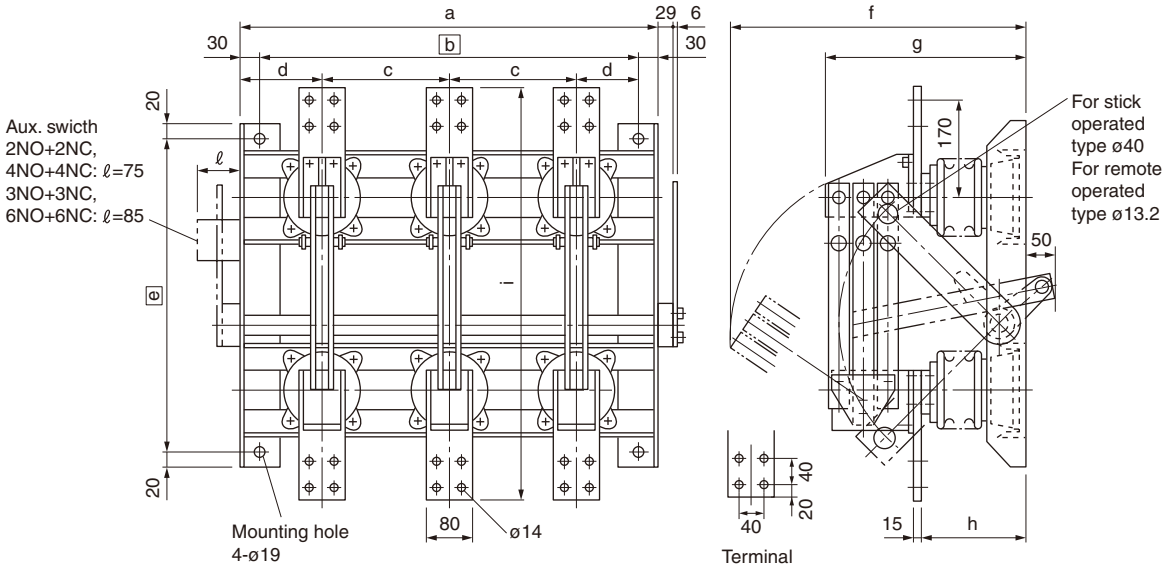

Type	a	b	c	d	e	f	g	h	i
RF240c|||/6/2000	660	600	200	130	490	557	311	161	640
RF240c|||/20/2000	1160	1100	340	240	630	754	416	266	740
RF240c|||/30/200	1540	1480	440	330	720	935	506	356	820

E1

RF240c|||/6, 20/4000 (F-F)

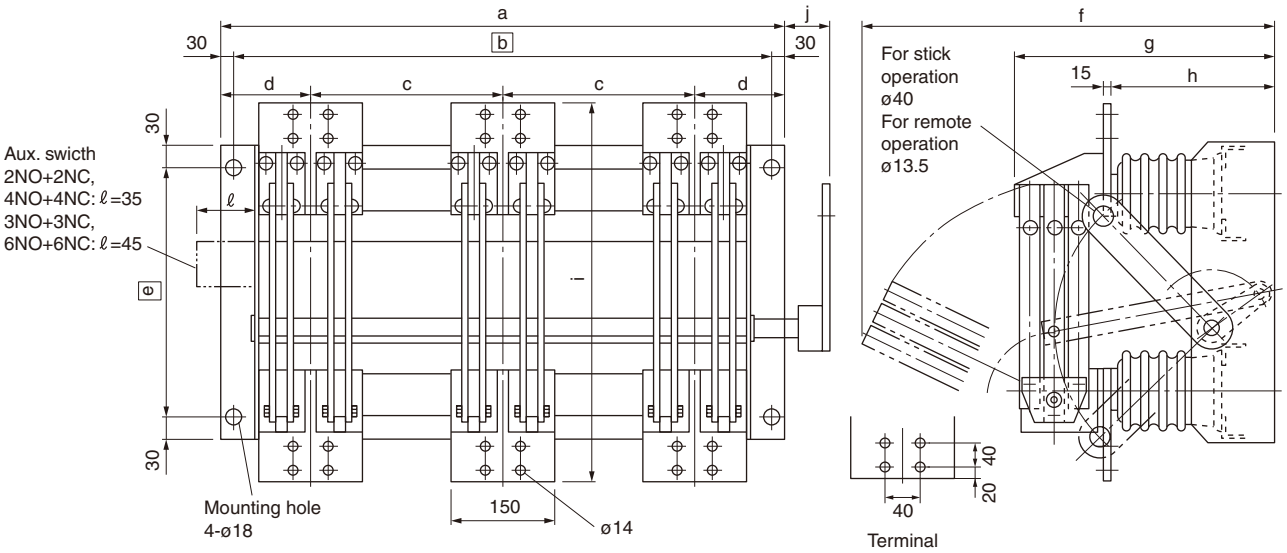

Type	a	b	c	d	e	f	g	h	i	j
RF240c|||/6/4000	920	860	300	160	370	613±10	380	230	620	59
RF240c|||/20/4000	1280	1220	420	220	530	832±10	485	335	740	109

Gang-operated mechanisms for disconnecting switches

■ Description

The V, RF type 3-pole disconnecting switches and the LB type air load break switches can be provided with remote gang-operated mechanisms. The R290-B mechanism is a manual type and is handle-operated. The R293B type is motor driven. An interlocking system prevents incorrect operation. Versions are also available in which locking action is carried out by energizing or de-energizing a solenoid-coil.

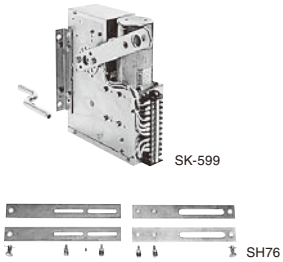

Motor driven operating mechanism R293B

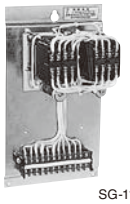

Control unit for motor-driven operating mechanism

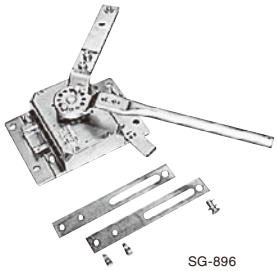

Manual operating mechanism R290-B

■ Features

Motor-driven operating mechanism

- The R293B motor-driven type is provided with an interlocking switch which prevents the motor from being remotely operated when the crank handle is in position.
- AC and DC common-use motors are available in 110 and 220 Volts ratings.
- The R293X motorized control devices are easy to install and improve the integrity of the electrical system.
  R293X devices are sold separately.
- These mechanisms are provided with manual crank handle so that the disconnecting switch can be operated even if the drive motor is faulty or an electrical interruption has taken place.
- Units are fitted with SPDT contacts for crank handle operation interlock use — when a switch is being operated manually the drive motor cannot be engaged.

Manual operating mechanism

- The R290-B is a new type manual operating mechanism. The switchgear can be fitted to either side.
- The crank lever can be attached at any angle through 360°, and this can be easily repositioned for operating convenience. A tie-rod links it to the disconnecting switch.
- An interlock solenoid coil is provided. An automatic locking mechanism prevents faulty operation.
- If required a 1NC switch for crank handle operating interlock use can be provided.

Please ask FUJI for the installation, dimensions and piping/wiring diagrams.

■ Ordering information

Specify the following:
1. Type number

• Motor-driven operating mechanism

Type	Ordering code	Motor ratings	Application
R293B-1	HZ1LT-1	100/110V AC, DC 8.8A	• V-type, RF240-type Rated current 1200A or less
R293B-2	HZ1LT-2	200/220V AC, DC 4.4A	• Rated current 2000A
R293BH-1		100/110V AC, DC 8.8A	
R293BH-2		200/220V AC, DC 4.4A	

• Control unit for motor-driven operating mechanism

Type	Ordering code	Motor ratings	Application
R293X-1	HZ1LQ-1	100/110V AC	R293B-1, R293BH-1 type
R293X-2	HZ1LQ-2	200/220V AC	R293B-2, R293BH-2 type
R293X-3	HZ1LQ-3	100/110V DC	R293B-1, R293BH-1 type

• Manual operating mechanism

Type	Ordering code	Interlock coil Unlock-coil energized	Lock-coil energized	Contact for crank handle
R290-B	HZ1VG	—	—	—
R290-BDS	HZ1VH	100/110V DC, 0.1A	—	1NC (110V DC, 1.3A)
R290-BAS	HZ1V1	100/110V AC, 0.1A	—	1NC (110V DC, 1.3A)
R290Z-BAS	HZ1VJ	—	100/110V AC, 0.1A	1NC (110V DC, 1.3A)

Note : 24V DC, 48V DC, 200/220V AC are also available.

• Switch stick

Type	Ordering code	Description	Illustration
HI-10	HZ1VA	• Applicable voltage: Less than 12kV Full length: 1m	
HI-30		• Applicable voltage: Less than 36kV Full length: 2m	

■ Type number nomenclature

• Manual operating mechanism

R290-B D S

- **Contact for crank handle**
  Blank: Without contact
  S: With contact
- **Interlock coil**
  Blank: Without interlock coil
  A: AC coil
  D: DC coil
- **With pin for lock**
- **Basic type**
  R290: Unlock-coil energized
  R290Z: Lock-coil energized

• Motor driven operating mechanism

R293B-2

- **Operating voltage**
  1: 100/110V AC, DC
  2: 200/220V AC, DC
- **Basic type**

• Control equipment

R293X-2

- **Operating voltage**
  1: 100/110V AC
  2: 200/220V AC
  3: 100/110V DC
- **Basic type**

Power fuses
General information

■ Description

FUJI current limiting power fuses are available in general purpose and back-up versions. Type SCF and HF ··· E general purpose fuses will interrupt all excessive current ranging from the minimum melting current to the rated interrupting current. They will accurately interrupt a 200 – 300% overcurrent of the rated current. The fuse can be used independently or incorporated with air load break switches not provided with trip mechanisms. Very economical to install. The back-up fuses are rated at 12kV or higher and used with switches provided with trip mechanisms incorporated with CT or OCR.

■ Design features

- These fuses comply with the requirements of JEC-2330. The FUJI power fuses fully meet the requirements of the JIS and JEC Standards, which makes them suitable for a wider range of applications.
- Excellent repeat accuracies
  FUJI current limiting power fuses have excellent repeat characteristics from the starting current and meet all the requirements of the Standards. This result from the employment of FUJI's specially developed fusible element which maintains its integrity from deterioration for the extent of its long service life.
- Easy selection
  The electrical characteristics of the individual transformer, capacitor or motor can easily be matched with the appropriate type from the wide variety of fuses available.
- Outstanding current limiting characteristics
  Since the available short-circuit current is interrupted within half a cycle the thermal and mechanical strength of the equipment can be greatly reduced.
- Small arc peak voltage
  The arc peak voltage at the time of interruption is less than twice the rated voltage. This eliminates the possibility of damage to the insulation of the motor winding and other electrical equipment.
- Wide range interruption
  The general purpose power fuses SCF and HF ··· E types are capable of interrupting small current overloads in the range of 200% – 300% of their rated current, yet will blow quickly in the face of massive destructive currents. Since they operate without fail through the range of their interrupting capacity they can be used independently and so save construction costs.

■ Construction

- Fuse link
  The fusible element consists of a pure silver wire packed in high-purity silica sand in a heat-resisting mechanically strong ceramic barrel.
- Fuse holder
  The holder for indoor use uses epoxy resin for insulation and is simple in design. The fuse is easy to replace. The 3-pole holder is provided with the barriers between the poles and the switch is safely operated by stick.
- Blown fuse indicator (indoor use only, except SCF-6/5)
  A spring fuse-blown indicator is provided in the fuse ferrule. The indicator is ejected when the fuse is blown. If required the indicator can be fitted with a sensitive switch so that the blown fuse can be identified from a distance.

3-pole fuse holder SCHIII with fuse links

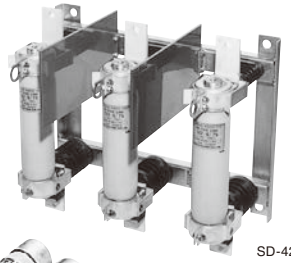

SD-422

SD-423

Fuse link SCF type

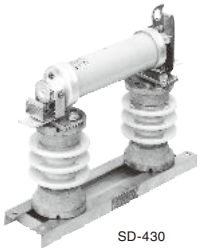

SD-430

Single-pole fuse holder SCHA-6 with fuse link

SD-425

Fuse link HF type

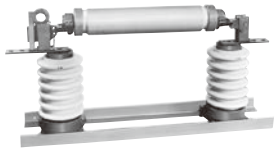

300498

Single-pole fuse holder HF323 with fuse link

SB1068

Fuse links 36kV HFA

■ Melting time-current characteristics and repeat overcurrent characteristics (JIS C 4604 and JEC-2330)

Fuse type *1	Melting time-current characteristics				Repeat overcurrent characteristics
	Non-melting current	$I_{f7,200}/I_n$	I_{f10}/I_n	$I_{f0.1}/I_n$	
T	When a fuse is subjected to a current 1.3 times its rated current the fusible element will not melt within two hours.	—	$2.5 \le I_{f10}/I_n \le 10$	$12 \le I_{f0.1}/I_n \le 25$	The fusible element will not melt when subjected to a current 10 times its rated current for a period of 0.1 seconds one hundred times.
M		—	$6 \le I_{f10}/I_n \le 10$	$15 \le I_{f0.1}/I_n \le 35$	The fusible element will not melt when subjected to a current 5 times its rated current for a period of 10 seconds one thousand times.
G		$I_{f7,200}/I_n \le 2$	$2 \le I_{f10}/I_n \le 5$	$7(I_n/100)^{0.25} \le I_{f0.1}/I_n \le 20(I_n/100)^{0.25}$	
C	When a fuse is subjected to a current 2. times its rated current the fusible element will not melt within two hours.	—	※ $I_{f60}/I_n \le 10$	—	The fusible element will not melt when subjected to a current 70 times its rated current for a period of 0.002 seconds one thousand times.

Note: *1
- T : Transformer protection
- M : Motor protection
- G : General purpose line protection
- C : Capacitor protection
- I_n : Fuse rated current
- I_{f10} : Current (Amps) where melt in 10 sec.
- $I_{f0.1}$: Current (Amps) where melt in 0.1 sec.
- $I_{f7,200}$: Current (Amps) where melt in 2 hours.
- I_{f60} : Current (Amps) where melt in 60 sec.

General purpose fuses and back-up fuses

The FUJI current-limiting power fuses are available as either general purpose-types or back-up-types.
General purpose fuses are provided with a wide range of interrupting performance. They can, for instance, interrupt excessive currents in the 200 – 300% range up to massive short-circuit currents. This indicates that they can interrupt currents including the fuse elements's melting current.
Since they are the most reliable type of fuse they can be attached to the FUJI LBS, LB-type air load break switches.
They can also be applied independently to M.V. circuits to give them adequate overload protection.
Back-up fuses are used in coordination with the circuit breaker with trip device, OCR and CT. The OCR operates in the face of small overcurrent approx. 200% of the rated current, while the fuse rapidly interrupts in the face of destructive short-circuit current. Although the power fuse has an excellent performance against massive overcurrent yet it has a tendency to explode against the small overcurrent. There is a region where fusible element melts but interruption may not take place. In this case the circuit breaker is required to cover this region.

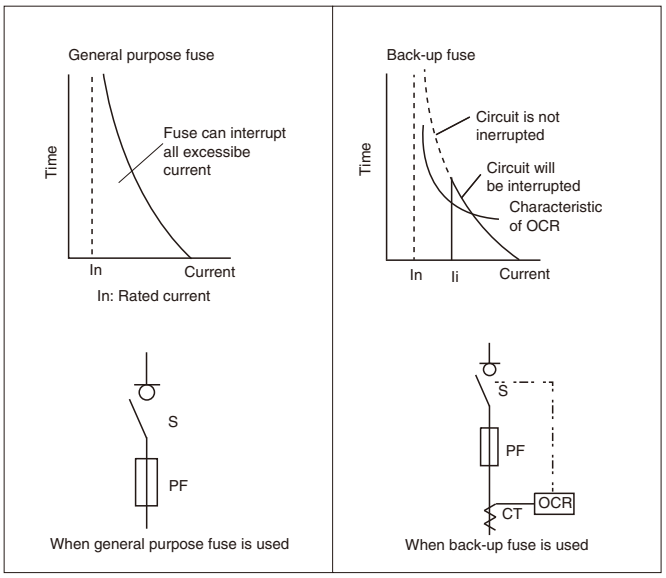

■ Type number of fuse

• General purpose fuses

Nominal current (A)	3.6kV		7.2kV		7.2kV	
	Interrupting capacity (kA) *1	Type	Interrupting capacity (kA) *1	Type	Interrupting capacity (kA) *1	Type
5	40 (250)	**HF337E/3/5**	40 (500)	**SCF-6/5**	40 (500)	**HF337E/6/5**
10	40 (250)	**HF337E/3/10**	40 (500)	**SCF-6/10**	40 (500)	**HF337E/6/10**
20	40 (250)	**HF338E/3/20**	40 (500)	**SCF-6/20**	40 (500)	**HF338E/6/20**
30	40 (250)	**HF338E/3/30**	40 (500)	**SCF-6/30**	40 (500)	**HF338E/6/30**
40	40 (250)	**HF338E/3/40**	40 (500)	**SCF-6/40**	40 (500)	**HF338E/6/40**
50	40 (250)	**HF338E/3/50**	20 (250)	**SCF-6/50**	40 (500)	**HF338E/6/50**
75	40 (250)	**HF338E/3/75**	20 (250)	**SCF-6/75**	40 (500)	**HF338E/6/75**
100	40 (250)	**HF338E/3/100**	–	**–**	40 (500)	**HF338E/6/100**
150	40 (250)	**HF338E/3/150**	–	**–**	40 (500)	**HF338E/6/150**
200	40 (250)	**HF338E/3/200**	–	**–**	31.5 (390)	**HF338E/6/200** *2
400	40 (250)	**HF338E/3/400** *2	–	**–**	31.5 (390)	**HF338E/6/400** *2

Notes: *1 ( ) indicate MVA. *2 Back-up fuse

• Back-up fuses

Nominal current (A)	12kV		24kV		36kV	
	Interrupting capacity (kA) *1	Type	Interrupting capacity (kA) *1	Type	Interrupting capacity (kA) *1	Type
5	40 (830)	**JR-10/5**	40 (1700)	**JR-20/5**	25 (1600)	**JR-30/5**
10	40 (830)	**HF337/10/10**	25 (1000)	**HF337/20/10**	16 (1000)	**HF337/30/10**
16	–	**–**	–	**–**	32 (2000)	**HFB-30/16**
20	40 (830)	**HF338B/10/20**	25 (1000)	**HF338B/20/20**	–	**–**
25	–	**–**	–	**–**	32 (2000)	**HFB-30/25**
30	40 (830)	**HF338B/10/30**	25 (1000)	**HF338B/20/30**	–	**–**
40	40 (830)	**HF338B/10/40**	25 (1000)	**HF338B/20/40**	32 (2000)	**HFB-30/40**
50	40 (830)	**HF338B/10/50**	–	**–**	–	**–**
75	40 (830)	**HF338B/10/75**	–	**–**	–	**–**
80	–	**–**	25 (1000)	2 x **HF338B/20/40**	32 (2000)	2 x **HFB-30/40**
100	40 (830)	**HF338B/10/100**	–	**–**	–	**–**
150	40 (830)	2 x **HF338B/10/75**	–	**–**	–	**–**
200	40 (830)	2 x **HF338B/10/100**	–	**–**	–	**–**

Note: *1 ( ) indicate MVA.

• Repeat operating life of general purpose fuses

Transformer circuit				Motor circuit			
Rated voltage (kV)	Type	Transformer rated current (A)	Repeat operations	Rated voltage (kV)	Type	Motor rated current (A)	Repeat operations
3.6	**HF338E/3/100**	75	10000 operations	3.6	**HF338E/3/50**	20	15000 operations
	HF338E/3/150	100			**HF338E/3/200**	100	
					HF338E/3/400	200	
7.2	**SCF-6/30**	15	10000 operations	7.2	**SCF-6/75**	30	15000 operations
	HF338E/6/30	15			**HF338E/6/75**	30	
	SCF-6/75	60			**HF338E/6/200**	100	
	HF338E/6/75	60			**HF338E/6/400**	200	
	HF338E/6/150	100					
	HF338E/6/400	300					

Note: Refer to repeat overcurrent characteristics on page E1-10.

Power fuses
Applications

■ Quick selection guide

• 3.3kV oil immersed type transformers

3-phase transformers			Single-phase transformers		
Capacity (kVA)	Rated current (A)	Recommended FUJI fuse Type	Capacity (kVA)	Rated current (A)	Recommended FUJI fuse Type
10	—	—	10	3.03	**HF338E/3/20**
20	3.5	**HF338E/3/20**	20	6.05	**HF338E/3/30**
30	5.25	**HF338E/3/30**	30	9.1	**HF338E/3/30**
50	8.75	**HF338E/3/40**	50	15.2	**HF338E/3/40**
75	13.1	**HF338E/3/40**	75	22.8	**HF338E/3/75**
100	17.5	**HF338E/3/50**	100	30.3	**HF338E/3/75**
150	26.3	**HF338E/3/75**	150	—	—

Note: Selection based on FUJI standard transformer.

• 6.6kV oil immersed type transformers

3-phase transformers			Single-phase transformers		
Capacity (kVA)	Rated current (A)	Recommended FUJI fuse HF series Type	Capacity (kVA)	Rated current (A)	Recommended FUJI fuse HF series Type
10	—	—	10	1.51	**HF337E/6/10**
20	1.75	**HF338E/6/20**	20	3	**HF338E/6/20**
30	2.63	**HF338E/6/20**	30	4.5	**HF338E/6/20**
50	4.36	**HF338E/6/20**	50	7.6	**HF338E/6/30**
75	6.55	**HF338E/6/30**	75	11.4	**HF338E/6/40**
100	8.75	**HF338E/6/30**	100	15.2	**HF338E/6/40**
150	13.1	**HF338E/6/40**	150	22.8	**HF338E/6/50**
200	17.5	**HF338E/6/50**	200	30.3	**HF338E/6/75**
300	26.3	**HF338E/6/75**	300	45	**HF338E/6/100**
500	43.6	**HF338E/6/100**	500	76	**HF338E/6/150**

Note: Selection based on FUJI standard transformer.

• 11kV oil immersed type transformers

3-phase transformers			Single-phase transformers		
Capacity (kVA)	Rated current (A)	Recommended FUJI fuse Type	Capacity (kVA)	Rated current (A)	Recommended FUJI fuse Type
15	0.79	**JR-10/5**	15	1.36	**HF337/10/10**
20	1.05	**JR-10/5**	20	1.82	**HF337/10/10**
25	1.31	**HF337/10/10**	25	2.27	**HF337/10/10**
30	1.57	**HF337/10/10**	30	2.73	**HF338B/10/20**
50	2.62	**HF337/10/10**	50	4.55	**HF338B/10/20**
75	3.94	**HF338B/10/20**	75	6.82	**HF338B/10/20**
100	5.25	**HF338B/10/20**	100	9.09	**HF338B/10/30**
150	7.87	**HF338B/10/30**	150	13.6	**HF338B/10/40**
200	10.5	**HF338B/10/30**	200	18.2	**HF338B/10/40**
250	13.1	**HF338B/10/40**	250	22.7	**HF338B/10/50**
300	15.8	**HF338B/10/40**	300	27.3	**HF338B/10/75**
500	26.2	**HF338B/10/50**	500	45.5	**HF338B/10/75**
750	39.4	**HF338B/10/75**	750	68.2	**HF338B/10/100**
1000	52.5	**HF338B/10/100**	1000	90.9	2 x **HF338B/10/100**

Note: Selection based on 10Xrated current —0.1 sec. transformer inrush current.

■ Quick selection guide

• 22kV oil immersed type transformers

3-phase transformers			Single-phase transformers		
Capacity (kVA)	Rated current (A)	Recommended FUJI fuse Type	Capacity (kVA)	Rated current (A)	Recommended FUJI fuse Type
15	0.39	**JR-20/5**	15	0.68	**JR-20/5**
20	0.52	**JR-20/5**	20	0.91	**JR-20/5**
25	0.66	**JR-20/5**	25	1.14	**JR-20/5**
30	0.79	**JR-20/5**	30	1.36	**HF337/20/10**
50	1.31	**HF337/20/10**	50	2.27	**HF337/20/10**
75	1.97	**HF337/20/10**	75	3.41	**HF338B/20/20**
100	2.62	**HF337/20/10**	100	4.55	**HF338B/20/20**
150	3.94	**HF338B/20/20**	150	6.82	**HF338B/20/20**
200	5.25	**HF338B/20/20**	200	9.1	**HF338B/20/30**
250	6.56	**HF338B/20/20**	250	11.4	**HF338B/20/30**
300	7.87	**HF338B/20/30**	300	13.6	**HF338B/20/40**
500	13.1	**HF338B/20/40**	500	22.7	2 x **HF338B/20/40**
750	19.7	**HF338B/20/40**	750	34.1	2 x **HF338B/20/40**
1000	29.2	2 x **HF338B/20/40**			

Note: Selection based on 10Xrated current –0.1 sec. transformer inrush current.

• 33kV oil immersed type transformers

3-phase transformers			Single-phase transformers		
Capacity (kVA)	Rated current (A)	Recommended FUJI fuse Type	Capacity (kVA)	Rated current (A)	Recommended FUJI fuse Type
15	0.26	**JR-30/5**	15	0.45	**JR-30/5**
20	0.35	**JR-30/5**	20	0.61	**JR-30/5**
25	0.44	**JR-30/5**	25	0.76	**JR-30/5**
30	0.52	**JR-30/5**	30	0.91	**JR-30/5**
50	0.87	**JR-30/5**	50	1.52	**HF337/30/10**
75	1.31	**HF337/30/10**	75	2.27	**HF337/30/10**
100	1.75	**HF337/30/10**	100	3.03	**HFB-30/16**
150	2.62	**HF337/30/10**	150	4.55	**HFB-30/16**
200	3.5	**HFB-30/16**	200	6.06	**HFB-30/25**
250	4.37	**HFB-30/16**	250	7.6	**HFB-30/25**
300	5.25	**HFB-30/25**	300	9.1	**HFB-30/40**
500	8.75	**HFB-30/40**	500	15.1	2 x **HFB-30/40**
750	13.1	2 x **HFB-30/40**	750	22.2	2 x **HFB-30/40**
1000	17.5	2 x **HFB-30/40**			

Note: Selection based on 10Xrated current –0.1 sec. transformer inrush current.

• 3.3/6.6kV FM-T14 type cast-resin transformers

3.3kV			6.6kV		
Capacity (kVA)	3-phase Recommended FUJI fuse Type	Single-phase Recommended FUJI fuse Type	Capacity (kVA)	3-phase Recommended FUJI fuse Type	Single-phase Recommended FUJI fuse Type
10	—	**HF338E/3/20**	10		**HF337E/6/10**
20	**HF338E/3/20**	**HF338E/3/20**	20	**HF338E/6/20**	**HF338E/6/20**
30	**HF338E/3/20**	**HF338E/3/40**	30	**HF338E/6/20**	**HF338E/6/20**
50	**HF338E/3/30**	**HF338E/3/40**	50	**HF338E/6/20**	**HF338E/6/30**
75	**HF338E/3/40**	**HF338E/3/75**	75	**HF338E/6/30**	**HF338E/6/40**
100	**HF338E/3/40**	**HF338E/3/75**	100	**HF338E/6/30**	**HF338E/6/40**
150	**HF338E/3/75**	**HF338E/3/100**	150	**HF338E/6/40**	**HF338E/6/75**
200	**HF338E/3/75**	**HF338E/3/150**	200	**HF338E/6/50**	**HF338E/6/75**
300	**HF338E/3/100**	**HF338E/3/200**	300	**HF338E/6/75**	**HF338E/6/100**
500	**HF338E/3/150**	**HF338E/3/400**	500	**HF338E/6/100**	**HF338E/6/150**
750	**HF338E/3/200**	—	750	**HF338E/6/100**	
1000	**HF338E/3/400**	—	1000	**HF338E/6/150**	
1500	**HF338E/3/400**	—	1500	**HF338E/6/200**	
			2000	**HF338E/6/400**	

Note: Selection based on FUJI standard transformer.

Power fuses
Applications

■ Quick selection guide

3.3kV circuits

3ø transformer capacity \ 1ø transformer capacity	—	5kVA	7.5kVA	10kVA	15kVA	20kVA	30kVA	50kVA	75kVA	100kVA
—	—	HF337E /3/5	HF337E/3/10					HF338E /3/30	HF338E /3/50	
5kVA	HF337E /3/5	HF337E /3/10	HF338E/3/20							
10kVA										
15kVA	HF337E /3/10				HF338E/3/30					
20kVA										
30kVA								HF338E /3/50		
50kVA		HF338E /3/30	HF338E/3/40							HF338E /3/100
75kVA	HF338E /3/30							HF338E/3/75		
100kVA		HF338E/3/50								
150kVA	HF338E /3/40									

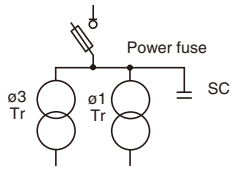

6.6kV circuits

3ø transformer capacity \ 1ø transformer capacity	—	5kVA	7.5kVA	10kVA	15kVA	20kVA	30kVA	50kVA	75kVA	100kVA
—	—	HF337E/6/5								
5kVA	HF337E /6/5	HF337E/6/10							HF338E /6/40	HF338E /6/50
10kVA										
15kVA										
20kVA										
30kVA			HF338E/6/20							
50kVA										
75kVA				HF338E/6/30						
100kVA										HF338E /6/75
150kVA					HF338E/6/40					
200kVA										
250kVA										
300kVA						HF338E/6/50				
500kVA	HF338E/6/75								HF338E/6/100	

Notes:
1. Select the rated current of power fuse .
2. These tables are based on the fact that capacity of capacitor (SC) is less than 1/3 of transformer total capacity (kVA) and that the transformer inrush current is 10x rated current , 0.1 sec.

Primary fuse protection of transformers (Simple selection method)

Maximum current of transformer circuit (A)	Fuse type	
1.5	**HF337E/3/5**	**HF337E/6/5**
3.2	**HF337E/3/10**	**HF337E/6/10**
8.2	**HF338E/3/20**	**HF338E/6/20**
14	**HF338E/3/30**	**HF338E/6/30**
22	**HF338E/3/40**	**HF338E/6/40**
30	**HF338E/3/50**	**HF338E/6/50**
52	**HF338E/3/75**	**HF338E/6/75**
82	**HF338E/3/100**	**HF338E/6/100**

Note:
1. Selection of the primary fuse, exciting current (r.m.s.) will be determined on the basis of a current 10 times the rated full-load current for the transformer which will flow for 0.1 sec.

2. When a group of three or single-phase transformers is connected in parallel, calculate the I_R, I_S and I_T maximum load line currents of the transformers to determine the largest, and select fuses by use of the table.

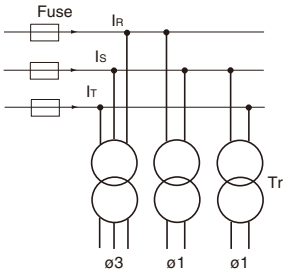

■ Quick selection guide

• 3.3kV induction motors

Motor capacity (kW)	Squirrel-cage type					Wound-rotor type				
	Rated current (A)	Rush current (A)	Starting time (Sec.)	Fuse type		Rated current (A)	Rush current (A)	Starting time (Sec.)	Fuse type	
				Normal operating	Twice repeat operating				Normal operating	Twice repeat operating
37	11	73	5	**HF338E/3/40**	**HF338E/3/50**	10.7	16.1	17	**HF338E/3/20**	**HF338E/3/20**
55	15.5	100	5	**HF338E/3/75**	**HF338E/3/75**	15.1	22.5	19	**HF338E/3/20**	**HF338E/3/20**
75	20.6	135	5	**HF338E/3/75**	**HF338E/3/75**	20.1	30.2	22	**HF338E/3/30**	**HF338E/3/30**
90	24	157.9	5	**HF338E/3/75**	**HF338E/3/100**	23.4	34.9	23	**HF338E/3/30**	**HF338E/3/30**
110	29.1	185	5	**HF338E/3/100**	**HF338E/3/100**	28.4	42.5	25	**HF338E/3/40**	**HF338E/3/40**
132	34.3	215	5	**HF338E/3/100**	**HF338E/3/150**	33.5	50.1	27	**HF338E/3/40**	**HF338E/3/40**
160	41.1	260.2	5	**HF338E/3/150**	**HF338E/3/150**	40.2	60.1	30	**HF338E/3/50**	**HF338E/3/50**
200	51.1	320	5	**HF338E/3/150**	**HF338E/3/200**	49.8	74.5	33	**HF338E/3/75**	**HF338E/3/75**
250	59.5	330	10	**HF338E/3/200**	**HF338E/3/200**	58	86.8	36	**HF338E/3/75**	**HF338E/3/75**
280	68	377.2	10	**HF338E/3/200**	**HF338E/3/200**	66.3	99.2	38	**HF338E/3/100**	**HF338E/3/100**
315	78.1	407	10	**HF338E/3/200**	**HF338E/3/200**	77.6	116.1	40	**HF338E/3/100**	**HF338E/3/100**
355	86.2	474.1	10	**HF338E/3/200**	**HF338E/3/400**	84.4	126.3	42	**HF338E/3/100**	**HF338E/3/100**
400	102	563	10	**HF338E/3/400**	**HF338E/3/400**	100.2	149.9	44	**HF338E/3/150**	**HF338E/3/150**
450	114.3	629	10	**HF338E/3/400**	**HF338E/3/400**	112.3	168	47	**HF338E/3/150**	**HF338E/3/150**
500	128.7	703	10	**HF338E/3/400**	**HF338E/3/400**	128.7	192.6	49	**HF338E/3/200**	**HF338E/3/200**
560	144.1	798	10	**HF338E/3/400**	**HF338E/3/400**	144.1	215.6	52	**HF338E/3/200**	**HF338E/3/200**
630	162.6	898	10	**HF338E/3/400**	**—**	162.6	243.3	55	**HF338E/3/200**	**HF338E/3/200**

Note1: Full load current and starting current values: Motors with ratings of 200kW or less meet the requirements of JEM 1381.
Motors with ratings of over 250kW conform to the requirements of FUJI standard motors.
Note2: Fuse rated values are selected on the basis of G-type fuses.

• 6.6kV induction motors

Motor capacity (kW)	Rated current (A)	Squirrel-cage type		Wound-rotor type	
		Fuse type		Fuse type	
		Normal operating	Twice repeat operating	Normal operating	Twice repeat operating
250	29	**HF338E/6/100**	**HF338E/6/150**	**HF338E/6/40**	**HF338E/6/40**
315	38	**HF338E/6/150**	**HF338E/6/150**	**HF338E/6/40**	**HF338E/6/50**
375	45	**HF338E/6/150**	**HF338E/6/200**	**HF338E/6/50**	**HF338E/6/75**
450	54	**HF338E/6/200**	**HF338E/6/200**	**HF338E/6/75**	**HF338E/6/75**
530	63	**HF338E/6/200**	**HF338E/6/400**	**HF338E/6/75**	**HF338E/6/75**
630	74	**HF338E/6/400**	**HF338E/6/400**	**HF338E/6/100**	**HF338E/6/100**
750	89	**HF338E/6/400**	**HF338E/6/400**	**HF338E/6/100**	**HF338E/6/100**
850	100	**HF338E/6/400**	**HF338E/6/400**	**HF338E/6/150**	**HF338E/6/150**
950	110	**HF338E/6/400**	**HF338E/6/400**	**HF338E/6/150**	**HF338E/6/150**
1050	121	**HF338E/6/400**	**—**	**HF338E/6/150**	**HF338E/6/150**
1200	138	**—**	**—**	**HF338E/6/200**	**HF338E/6/200**
1320	152	**—**	**—**	**HF338E/6/200**	**HF338E/6/200**
1500	172	**—**	**—**	**HF338E/6/200**	**HF338E/6/200**

Note1: The application recommendations are based on the ratings for FUJI standard 4-pole motors.
Note2: The starting current and the starting time differ according to the load GD2. However, the type of fuse has been selected on the basis of the most typical value. When special operations are involved please contact FUJI.
Note3: Fuse rated values are selected on the basis of G-type fuses.
Note4: When 2-step starting is required please consider the starting time for selecting the fuse:

The starting time (i.e., the time before the rated speed is reached) is twice the time taken for 1-step starting.

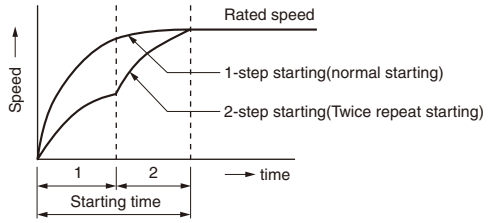

Power fuses
Applications

■ Quick selection guide

• 3.3/6.6kV capacitor

Capacity (kVA)	3-phase 3.3kV Rated current (A)	Fuse type	3-phase 6.6kV Rated current (A)	Fuse type
5	0.88	**HF337E/3/10**	0.44	**HF337E/6/5**
7.5	1.31	**HF337E/3/10**	0.66	**HF337E/6/5**
10	1.75	**HF337E/3/10**	0.88	**HF337E/6/10**
15	2.62	**HF338E/3/20**	1.31	**HF337E/6/10**
20	3.5	**HF338E/3/20**	1.75	**HF337E/6/10**
25	4.37	**HF338E/3/20**	2.2	**HF337E/6/10**
30	5.25	**HF338E/3/20**	2.62	**HF338E/6/20**
50	8.8	**HF338E/3/30**	4.37	**HF338E/6/20**
75	13.1	**HF338E/3/30**	6.56	**HF338E/6/20**
100	17.5	**HF338E/3/40**	8.75	**HF338E/6/30**
150	26.2	**HF338E/3/50**	13.1	**HF338E/6/30**
200	35	**HF338E/3/75**	17.5	**HF338E/6/40**
250	43.7	**HF338E/3/75**	21.9	**HF338E/6/50**
300	52.4	**HF338E/3/100**	26.2	**HF338E/6/50**
400	70	**HF338E/3/100**	35	**HF338E/6/75**
500	87.4	**HF338E/3/150**	43.7	**HF338E/6/75**

Note1: Selection based on the capacitor inrush current of 70 times rated current, 2ms.
Note2: Fuse rated values are selected on the basis of G-type fuses.

• 11/22/33kV capacitor

Capacity (kVA)	3-phase 11kV Rated current (A)	Fuse type	3-phase 22kV Rated current (A)	Fuse type	3-phase 33kV Rated current (A)	Fuse type
15	0.79	**JR-10/5**	0.39	**JR-20/5**	0.26	**JR-30/5**
20	1.05	**JR-10/5**	0.53	**JR-20/5**	0.35	**JR-30/5**
25	1.31	**HF337/10/10**	0.66	**HF337/20/10**	0.44	**JR-30/5**
30	1.56	**HF337/10/10**	0.79	**HF337/20/10**	0.53	**JR-30/5**
50	2.63	**HF337/10/10**	1.31	**HF337/20/10**	0.88	**JR-30/5**
75	3.94	**HF338B/10/20**	1.97	**HF338B/20/20**	1.31	**HF337/30/10**
100	5.25	**HF338B/10/20**	2.63	**HF338B/20/20**	1.75	**HF337/30/10**
150	7.87	**HF338B/10/30**	3.93	**HF338B/20/20**	2.63	**HF337/30/10**
200	10.5	**HF338B/10/40**	5.25	**HF338B/20/20**	3.5	**HFB-30/16**
250	13.1	**HF338B/10/40**	6.55	**HF338B/20/30**	4.36	**HFB-30/16**
300	15.8	**HF338B/10/50**	7.87	**HF338B/20/30**	5.25	**HFB-30/16**
500	26.3	**HF338B/10/75**	13.1	**HF338B/20/40**	8.75	**HFB-30/25**
750	39.4	**HF338B/10/100**	19.7	2 x **HF338B/20/40**	13.1	**HFB-30/40**
1000	52.5	2 x **HF338B/10/75**	26.3	—	17.5	2 x **HFB-30/40**

Note: Selection based on the capacitor inrush current, 70 times rated current -2ms.

■ Quick selection guide

General purpose fuses

• Fuse-link

Illustration	Ratings Voltage (kV)	Interrupting capacity (kA)	Current (A)	Type	Ordering code	Mass (kg)	Applicable fuse-holder Indoor use Type	Applicable fuse-holder Outdoor use Type
SD-423 **SCF-6/30 30A**	7.2	40 (500MVA)	5	**SCF-6/5**	HF2S-005	1.3	SCHA-6 SCHIII-6	—
			10	**SCF-6/10**	HF2S-010	1.3		
			20	**SCF-6/20**	HF2S-020	1.3		
			30	**SCF-6/30**	HF2S-030	1.3		
			40	**SCF-6/40**	HF2S-040	1.3		
		20 (250MVA)	50	**SCF-6/50**	HF2S-050	1.5		
			75	**SCF-6/75**	HF2S-075	1.5		
HF337E/3/10 10A	3.6	40 (250MVA)	5	**HF337E/3/5**	HF1A-005	1.0	HF340/6a HF340III/6a	HF326C/6a
			10	**HF337E/3/10**	HF1A-010	1.0		
			20	**HF338E/3/20**	HF1E-020	2.5		
			30	**HF338E/3/30**	HF1E-030	2.5		
			40	**HF338E/3/40**	HF1E-040	2.5		
			50	**HF338E/3/50**	HF1E-050	2.5		
			75	**HF338E/3/75**	HF1E-075	2.5		
			100	**HF338E/3/100**	HF1E-100	2.5		
SD-424 **HF338E/3/100 100A**			150	**HF338E/3/150**	HF1E-150	4.0	HF340/6b HF340III/6b	HF326C/6b
			200	**HF338E/3/200**	HF1E-200	4.0		
			400	**HF338E/3/400***	HF1E-400	6.5	HF323/6e	—
SD-425 **HF338E/6/400 400A**	7.2	40 (500MVA)	5	**HF337E/6/5**	HF2A-005	1.0	HF340/6a HF340III/6a	HF326C/6a
			10	**HF337E/6/10**	HF2A-010	1.0		
			20	**HF338E/6/20**	HF2E-020	2.5		
			30	**HF338E/6/30**	HF2E-030	2.5		
			40	**HF338E/6/40**	HF2E-040	3.0	HF340/6b HF340III/6b	HF326C/6b
			50	**HF338E/6/50**	HF2E-050	3.0		
			75	**HF338E/6/75**	HF2E-075	3.0		
			100	**HF338E/6/100**	HF2E-100	3.0		
			150	**HF338E/6/150**	HF2E-150	3.0		
		31.5 (390MVA)	200	**HF338E/6/200***	HF2E-200	3.0		
			400	**HF338E/6/400***	HF2E-400	6.5	HF323/6e	—

Note: * Back up fuse.

• Fuse-holder

Illustration	Ratings Voltage (kV)	Usage	Poles	Type	Ordering code	Mass (kg)
SD-428 **HF**	3.6/7.2	Indoor use	1	**HF340/6a**	HE3E	3.0
			1	**HF340/6b**	HE3F	3.5
			1	**HF323/6e**	HE3U	16.5*
			3	**HF340III/6a**	HE3P	7.0
			3	**HF340III/6b**	HE3Q	8.0
SD-422 **SCHIII-6**	3.6/7.2	Outdoor use	1	**HF326C/6a**	HE3R	21.5*
			1	**HF326C/6b**	HE3K	22.0*
			1	**HF326CII/6b**	HE3L	24.0*
	7.2	Indoor use	1	**SCHA-6**	HE3S	3.3
			3	**SCHIII-6**	HE3T	7.0

Note: Mass does not include fuse-link.
* With porcelain insulator.

Power fuses & fuse holders 12, 24, and 36kV

■ Types and ratings

Back-up fuses (Rated minimum breaking current: 3 × Rated current)

• Fuse-link

Illustration	Ratings Voltage (kV)	Interrupting capacity (kA)	Current (A)	Type	Ordering code	Mass (kg)	Applicable fuse-holder Indoor use Type	Applicable fuse-holder Outdoor use Type
SB-1068 **Fuse link 36kV**	12	40 (830MVA)	5	**JR-10/5**	HF4J-005	1.0	JT-10Z	—
			10	**HF337/10/10**	HF4Q-010	1.5	HF323/10a	HF326/10a
			20	**HF338B/10/20**	HF4D-020	3.0	HF323/10b	HF326/10b
			30	**HF338B/10/30**	HF4D-030	3.0		
			40	**HF338B/10/40**	HF4D-040	3.0		
			50	**HF338B/10/50**	HF4D-050	3.0		
			75	**HF338B/10/75**	HF4D-075	3.0		
			100	**HF338B/10/100**	HF4D-100	3.0		
			150	2 x **HF338B/10/75**	HF4D-075	6.0	HF323II/10b	HF326II/10b
			200	2 x **HF338B/10/100**	HF4D-100	6.0		
	24	40 (1700MVA)	5	**JR-20/5**	HF6J-005	1.5	JT-20Z	—
		25 (1000MVA)	10	**HF337/20/10**	HF6Q-010	2.0	HF323/20	HF326/20
			20	**HF338B/20/20**	HF6D-020	3.5		
			30	**HF338B/20/30**	HF6D-030	3.5		
			40	**HF338B/20/40**	HF6D-040	3.5		
			80	**2xHF338B/20/40**	HF6D-080	7.0	HF323II/20	HF326II/20
	36	25 (1600MVA)	5	**JR-30/5**	HF8J-005	2.0	JT-30Z	—
		16 (1000MVA)	10	**HF337/30/10**	HF8Q-010	2.5	HF323/30	HF326/30
		32 (2000MVA)	16	**HFB-30/16**	HF8H-016	4.6		
			25	**HFB-30/25**	HF8H-025	6.8		
			40	**HFB-30/40**	HF8H-040	6.8		
			80	2 x **HFB-30/40**	HF8H-080	13.6	HF323II/30	HF326II/30

• Fuse-holder

Illustration	Ratings Voltage (kV)	Usage	Poles	Type	Ordering code	Mass (kg)
300498 **HF323/10**	12	Indoor use	1	**HF323/10a**	HE4E	17
				HF323/10b	HE4E-S	18
				HF323II/10b	HE4E-L	20
		Outdoor use	1	**HF326/10a**	HE4R	21
				HF326/10b	HE4K	23
				HF326II/10b	HE4L	25
	24	Indoor use	1	**HF323/20**	HE6M	23
				HF323II/20	HE6G	25
		Outdoor use	1	**HF326/20**	HE6N	31
				HF326II/20	HE6L	33
	36	Indoor use	1	**HF323/30**	HE8M	30
				HF323II/30	HE8G	32
		Outdoor use	1	**HF326/30**	HE8N	41
				HF326II/30	HE8L	43

Note: Mass does not include fuse-link.

■ Ordering information

Specify the following:
1. Type number
2. Rated voltage
3. Rated current

When ordering fuse-holder (HF type indoor use) with remote operation indicating device, add "S" to the end of type number.

Example
- Fuse-link
  7.2kV HF-type general purpose fuse.
  Rated current 100A
  Interrupting capacity 40kA
  Type number: HF338E/6/100
- Fuse-holder (for above fuse-link)
  7.2kV 100A Single-pole Indoor use
  Type number: HF340/6b

■ Type number nomenclature

• Fuse-link

SCF - 6/5
- **Rated current**
  5: 5A
  10: 10A
  20: 20A
  30: 30A
  40: 40A
  50: 50A
  75: 75A
- **Rated voltage**
  6: 7.2kV
- **Basic type**

HF337E / 6 /10
- **Rated current**
  5: 5A, 10: 10A, 20: 20A, 30: 30A, 40: 40A, 50: 50A, 75: 75A, 100: 100A, 150: 150A, 200: 200A, 400: 400A
- **Rated voltage**
  3: 3.6kV, 6: 7.2kV, 10: 12kV, 20: 24kV, 30: 36kV
- **Basic type**
  HF337E, HF338E: General purpose fuse
  HF337, HF338B, JR: Back-up fuse

• Fuse-holder

SCHA - 6
- **Rated voltage**
  6: 7.2kV
- **Basic type**
  SCHA: Single-pole
  SCHIII: 3-pole

HF340 III / 6
- **Rated voltage**
  6: 7.2kV
  10: 12kV
  20: 24kV
  30: 36kV
- **Poles**
  Blank: Single-pole
  II: 2-pole parallel connected
  III: 3-pole
- **Basic type**
  HF340: Indoor use
  HF323: Indoor use
  HF326: Outdoor use

■ Characteristic curves

• General purpose fuses

Current-limiting characteristic curves

SCF-type 7.2kV

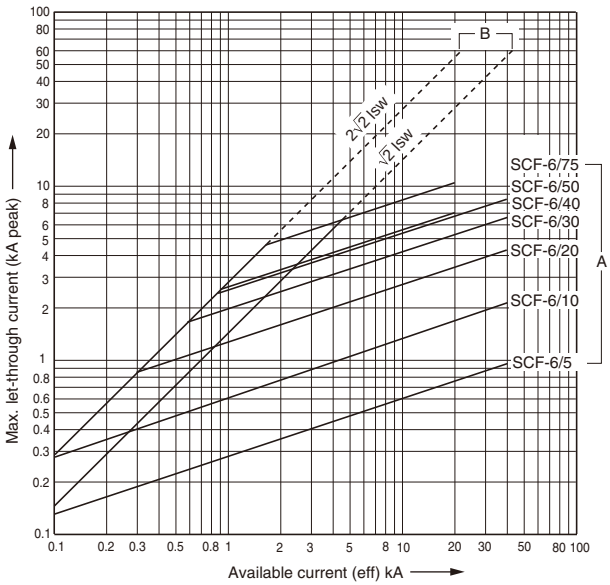

HF-type 3.6 / 7.2kV (E type)

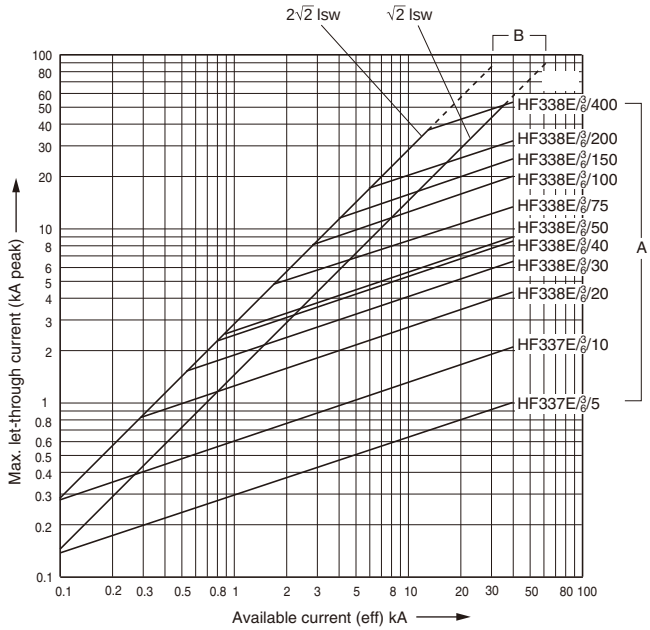

Permissible time-current characteristic curves

SCF-type 7.2kV

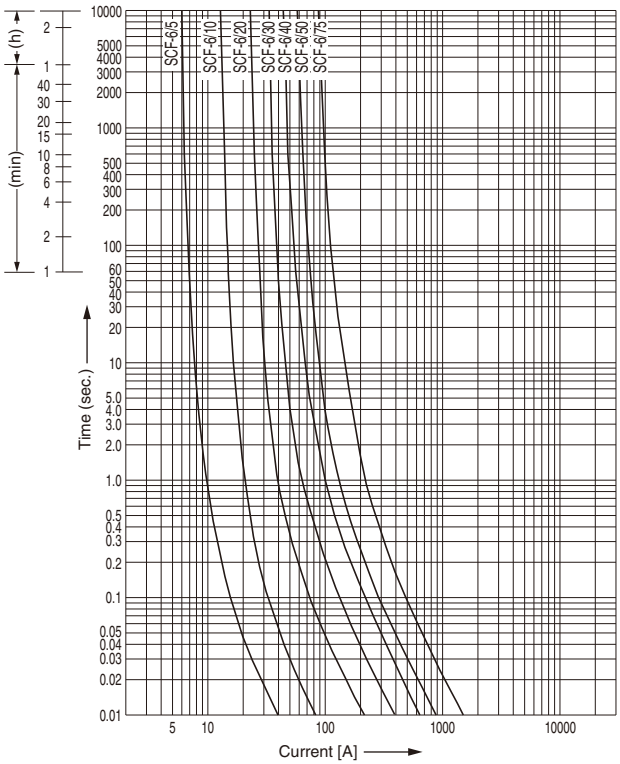

HF-type 3.6 / 7.2kV (E type)

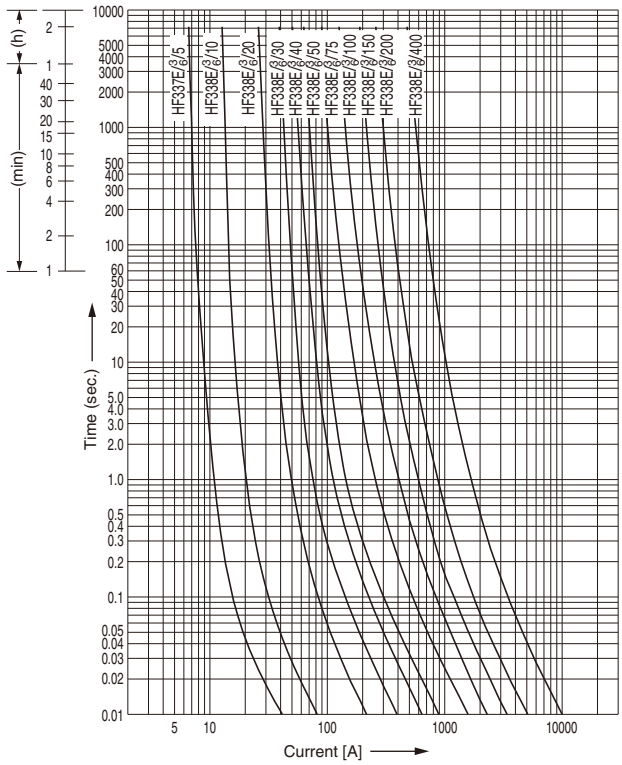

E1

Power fuses
3.6 and 7.2kV

• General purpose fuses

Melting time-current characteristic curves (Pre-arcing)
SCF-type 7.2kV

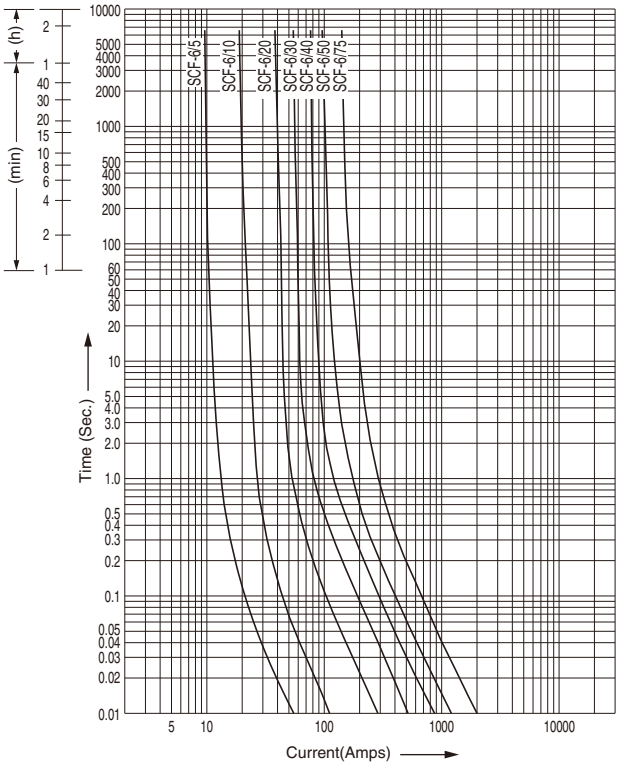

HF-type 3.6 / 7.2kV (E type)

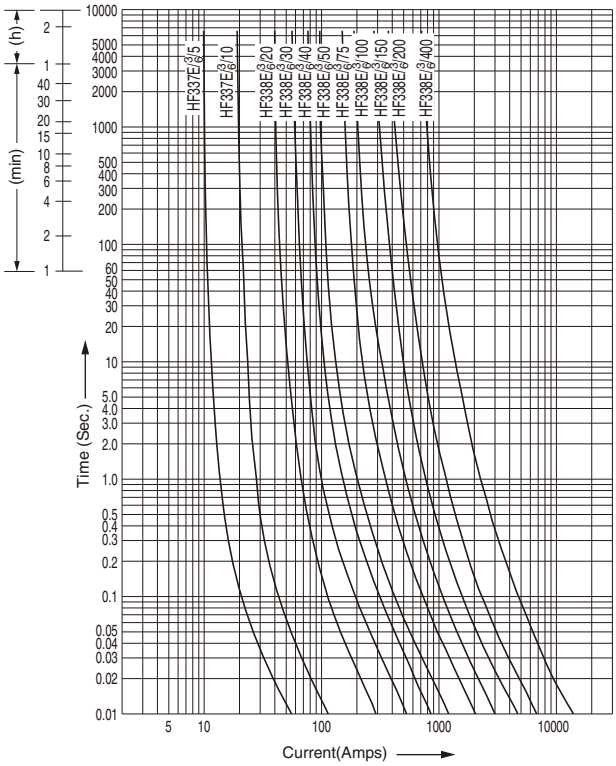

E1

Total clearing (operating) time-current characteristic curves
SCF-type 7.2kV

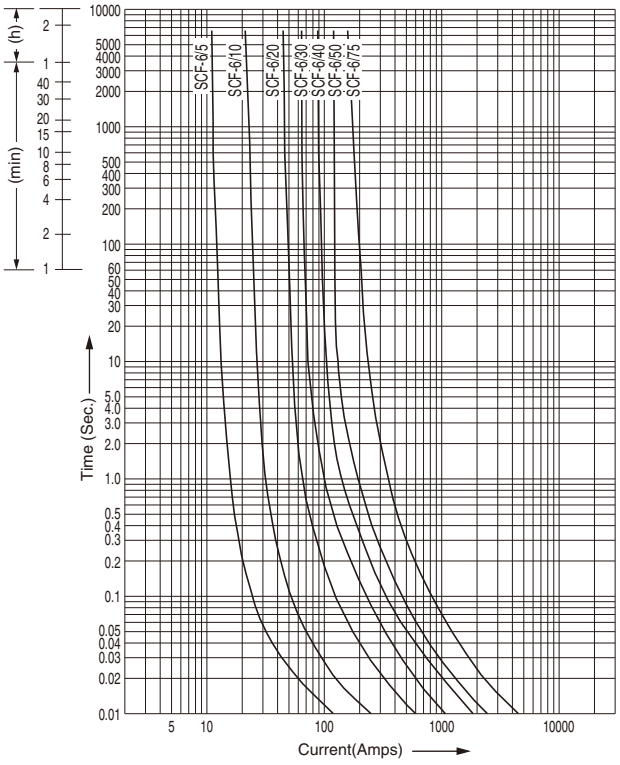

HF-type 3.6 / 7.2kV (E type)

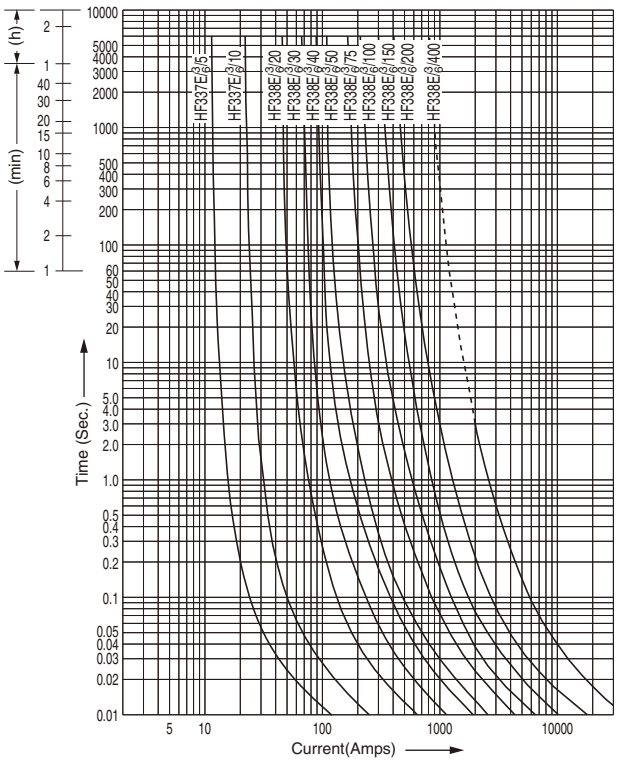

■ Characteristic curves

• Back-up fuses

Current-limiting characteristic curves

HF-type 12, 24kV

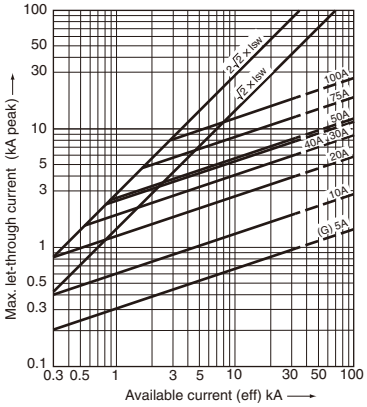

HFB-type 36kV

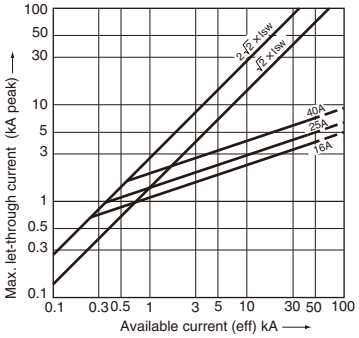

JR-type 36kV

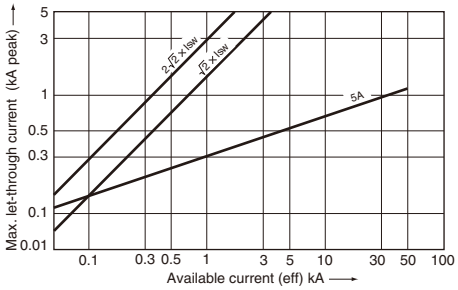

Melting time-current characteristic curves

HF-type 12, 24kV

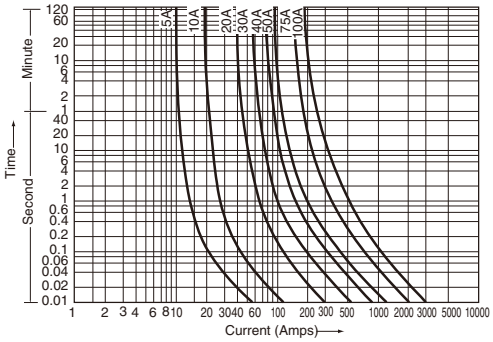

HFB-type 36kV

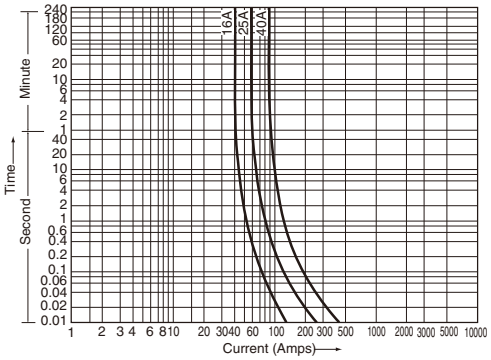

JR-type 36kV

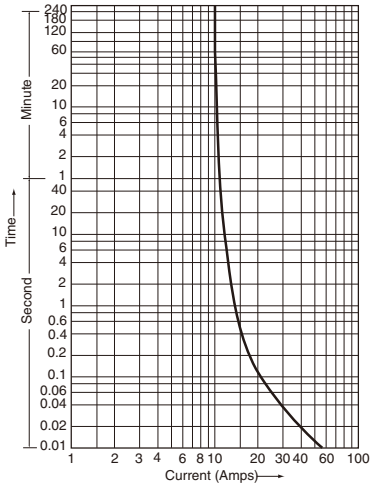

Total clearing (operating) time-current characteristic curves

HF-type 12, 24kV

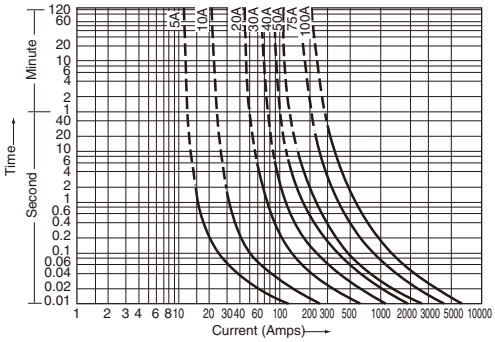

HFB-type 36kV

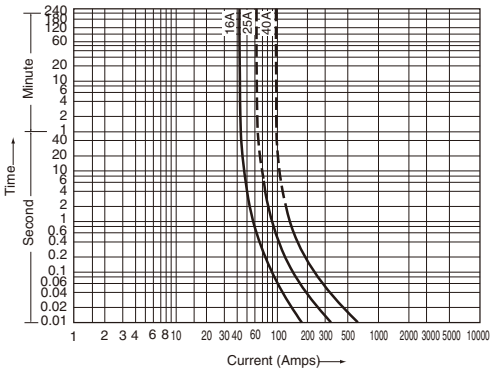

JR-type 36kV

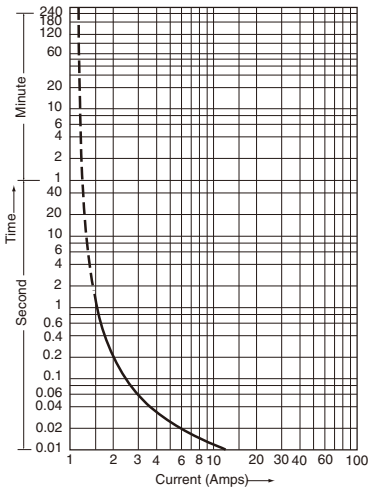

Fuse holders
SCH & HF340 type

■ Dimensions, mm (with fuse links)

• General purpose fuses

Fuse-holder
SCHA-6

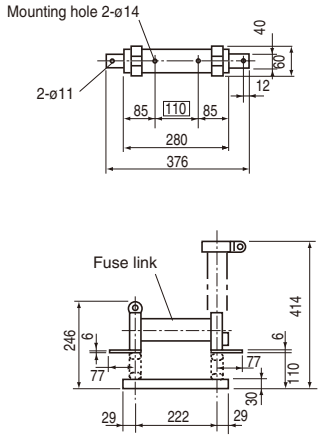

SCH III-6

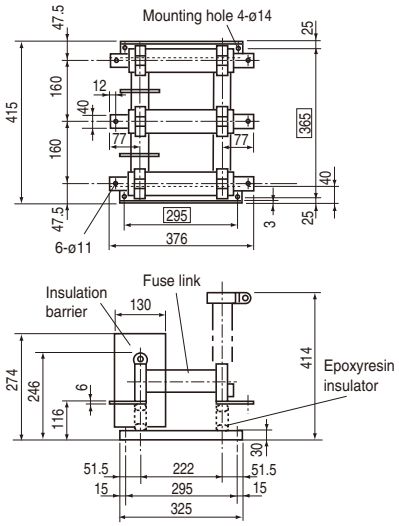

HF-340/6a

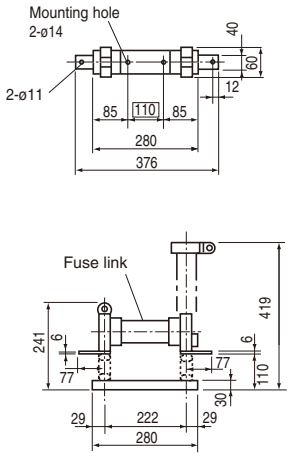

HF340 III/6a

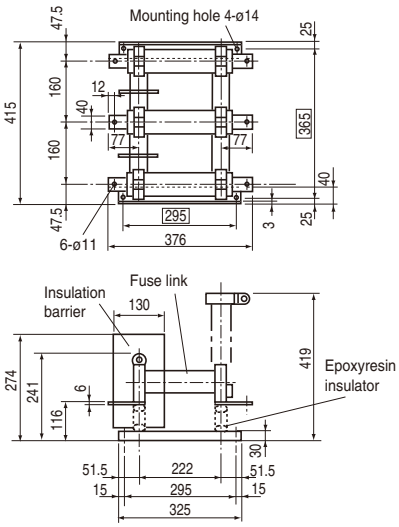

HF340/6b

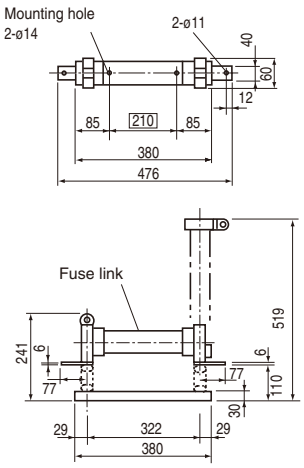

HF340 III/6b

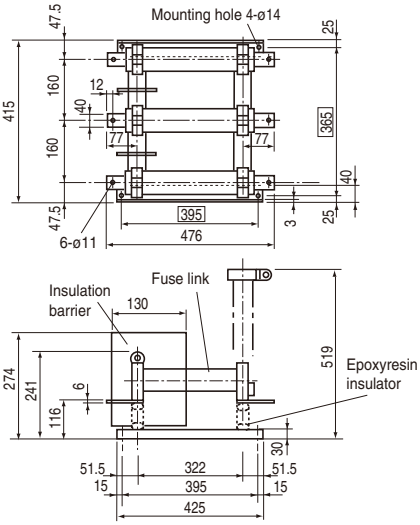

■ Dimensions, mm (with fuse links)

• General purpose fuses

Fuse-holder
HF323/6e

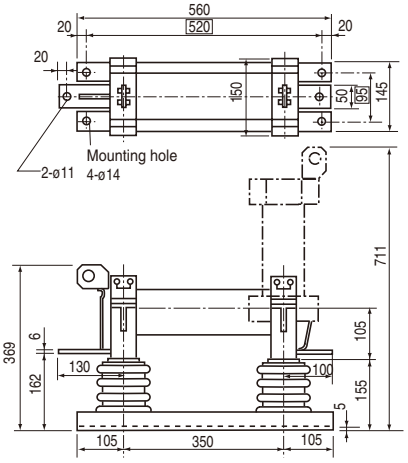

HF326C/6a, 6b

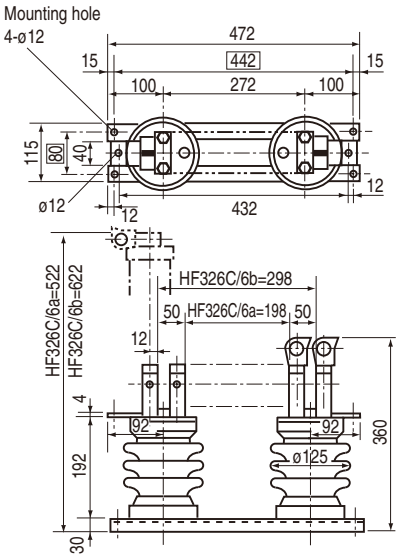

HF326C II/6b

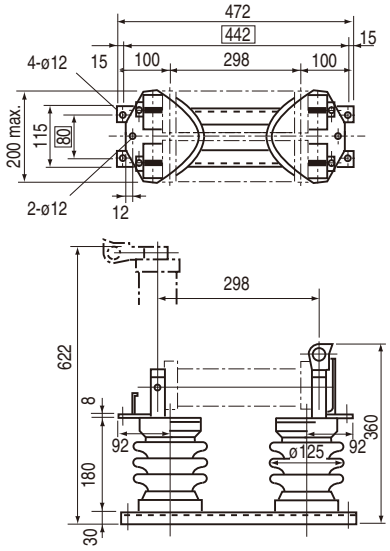

Installation dimensions (minimum)

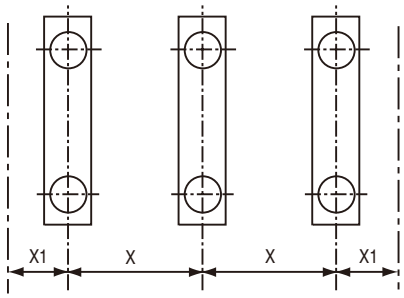

Usage	Rated voltage (kV)	Fuse-holder Type	Dimensions, mm Between poles (X)	To ground (X_1)
Indoor use	7.2	SCHA-6	160	110
	3.6	HF340/6a	160	130
		HF340/6b	160	100
		2×HF340/6b	260	210
		HF323/6e	250	175
	7.2	HF340/6a	160	130
		HF340/6b	160	130
		2×HF340/6b	260	210
		HF323/6e	250	175
Outdoor use	3.6	HF326C/6a	200	130
		HF326C/6b	200	130
		HF326CII/6b	290	170
	7.2	HF326C/6a	230	150
		HF326C/6b	230	150
		HF326CII/6b	320	190

Fuse holders
HF323 & HF326 type

■ Dimensions, mm

• Back-up fuses (12, 24 and 36kV)

Fuse-holder

HF323

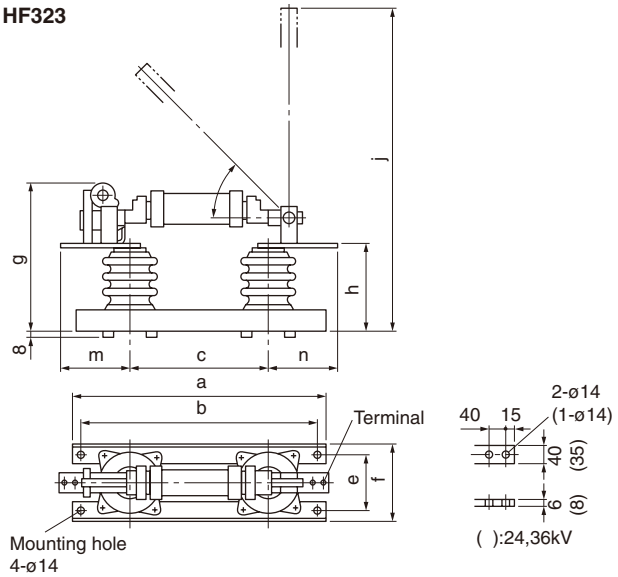

HF323 II

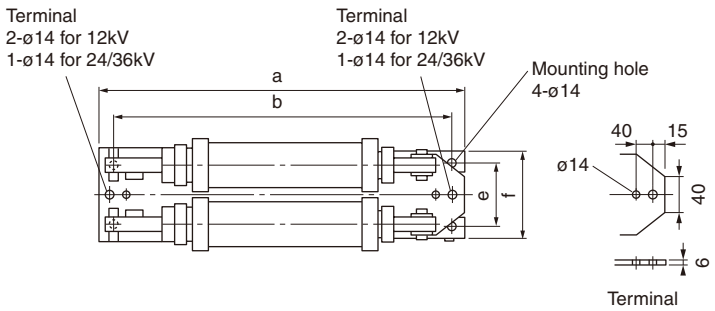

Fuse-holder Type	Rated voltage (kV)	Rated current (A)	a	b	c	e	f	g	h	j	m	n
HF323/10a	12	10	608	568	388	105	155	317	185	776	160	140
HF323/10b	12	20 to 100	758	718	538	105	155	317	185	926	160	140
HF323II/10b	12	150, 200	758	718	538	105	155	317	185	926	111	111
HF323/20	24	10 to 40	788	748	538	130	180	394	260	1001	130	106
HF323II/20	24	80	788	748	538	130	180	394	260	1001	111	111
HF323/30	36	10 to 40	884	844	634	130	180	484	350	1186	130	106
HF323II/30	36	80	884	844	634	130	180	484	350	1186	111	111

HF326

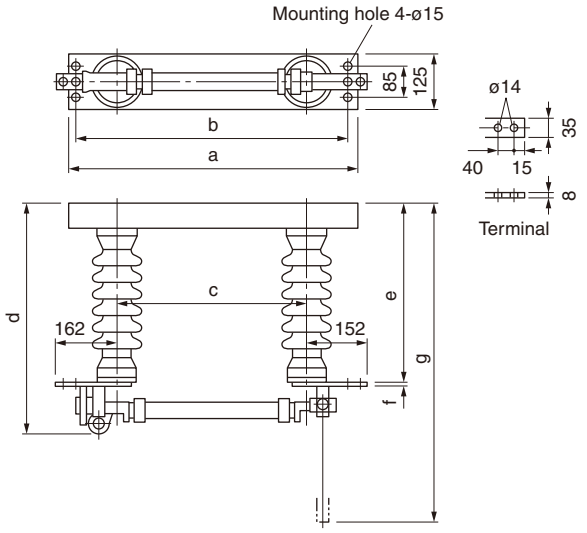

HF326 II

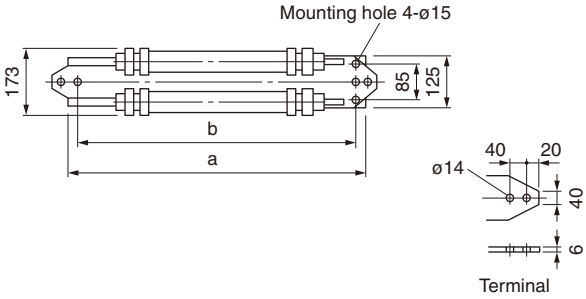

Fuse-holder Type	Rated voltage (kV)	Rated current (A)	a	b	c	d	e	f	g
HF326/10a	12	10	628	588	388	433	309	8	900
HF326/10b	12	20 to 100	778	738	538	433	309	8	1050
HF326II/10b	12	150, 200	778	738	538	433	409	6	1050
HF326/20	24	10 to 40	778	738	538	568	444	8	1185
HF326II/20	24	80	778	738	538	568	444	6	1185
HF326/30	36	10 to 40	874	814	638	698	574	8	1410
HF326II/30	36	80	874	814	638	698	574	6	1410

■ Dimensions, mm

General purpose fuses 3.6, 7.2kV

Type	L max.	Dimensions, mm
SCF-6/5 SCF-6/10 SCF-6/20 SCF-6/30 SCF-6/40	274	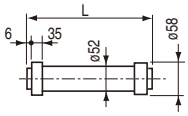
SCF-6/50 SCF-6/75	274	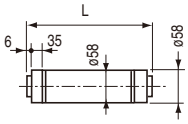
HF337E/6/5 HF337E/6/10	262	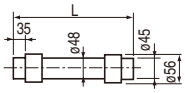
HF338E/6/20 HF338E/6/30	266	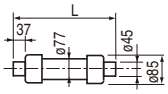
HF338E/6/40 to HF338E/6/200*	366	
HF338E/6/400*	408	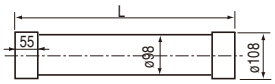
HF337E/3/5 HF337E/3/10	262	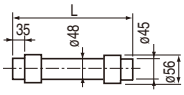
HF338E/3/20 to HF338E/3/100	266	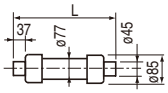
HF338E/3/150 HF338E/3/200	366	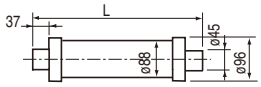
HF338E/3/400*	408	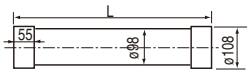

*: Back-up fuse
Mass: *See page E1-18.*

Back-up fuses

Type	L max.	Dimensions, mm
HF337/10/10	362	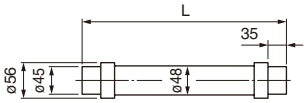
HF337/20/10	512	
HF337/30/10	607	
HF338B/10/20 HF338B/10/30 HF338B/10/40 HF338B/10/50 HF338B/10/75 HF338B/10/100 HF338B/20/20 HF338B/20/30 HF338B/20/40	516	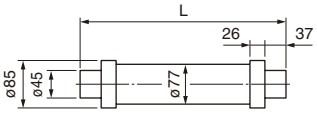
HFB-30/16 HFB-30/25 HFB-30/40	603	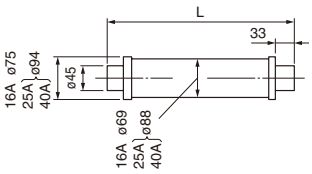
JR-10/5	262	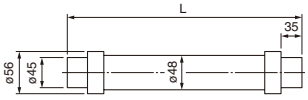
JR-20/5	362	
JR-30/5	512	

Mass: *See page 11/18.*

■ Ordering information: *See page E1-18.*

Air load break switches
General information

■ Description

- 3.6/7.2kV, 100–600 Amps (LB)
- 3.6/7.2kV, 200 Amps (LBS)
- 12/24/36kV, 600–1200 Amps (RF)

FUJI air load break switch type LBS is provided with current limiting power fuses and type LB is not so fitted. Both types are compact and incorporate arc-extinguishing devices of FUJI's own design. The arc is drawn into a long narrow chamber with close clearances in which the gases are rapidly cooled and dispersed. Contact points therefore wear very slowly, so giving switches a long service life.

FUJI air load break switches are recommended for use with power capacitors and transformers.

■ Features

- Excellent arc-extinguishing characteristics
  The arc-extinguishing system uses a gas-cooling method. This results in less contact wear than that of comparable oil-immersed types, so ensuring a longer service life and lower maintenance costs.
- Light and compact design
  The load break switch and fuses are incorporated into one body and are ideally suited for M.V. cubicle or metal-clad switchgear assembly applications.
- High current-limiting power fuses
  The LBS type is provided with FUJI power fuses so ensuring an accurate and uniform interrupting performance.
- Economical first cost
  The use of these fuses eliminates the need for circuit breakers with trip mechanisms, and so reduces initial installation costs.
- Safe fuse replacement
  Fuses can easily be replaced or changed to different ratings in perfect safety.
- A shunt trip mechanism
  A trip mechanism can be attached to LBS and LB having 100 and 200 Amps ratings. It can be tripped remotely.
- Blown fuse indicator
  LBS and LB200 to 400 Amps rated switches can be supplied with a blown indicator limit switch attached for remote indication use.
- Auxiliary contacts
  All these switches can be attached with 2NO+2NC 15 Amps switches.
- Motor-driven-types available
  The standard versions are for stick operation. Motor-driven versions are also available. For further details please contact FUJI.

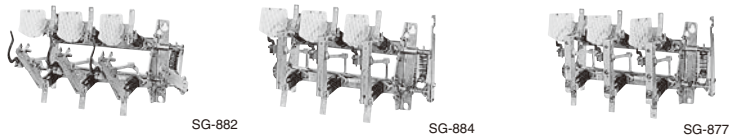

LB types

■ LB type

3.6kV/7.2kV up to 600 Amps 3-pole
3.6kV/7.2kV 200 and 400 Amps 3-pole with power fuse

The LB-type air load break switches are provided with the following major features:

1. They have been down-sized so that they can be installed in compact cubicles.
2. An improved interrupting performance and greater operating safety, achieved through a rotating arc contact and redesigned arc chute.
3. Accessories are built using a modular system, so that power fuse frames, gang-operated mechanisms and auxiliary swithches can easily be added to the main switch body as required.
   These can be fitted in position on site without adjustment.

In addition, the shunt trip mechanism (f) can be incorporated into the basic frame. Previously they were regarded as accessories. If shunt trip is required f suffix should be added to the type number when ordering.

Shunt trip mechanisms are factory-fitted before shipment. Please note that the R290B or R293B remote gang-operated mechanism cannot be incorporated with these shunt trip mechanisms. Those LB-type air load break switches of 200AF and 400AF can be fitted with power fuses. However, even if the LB-type units have 400AF ratings, power fuses up to 200 Amps only are required.

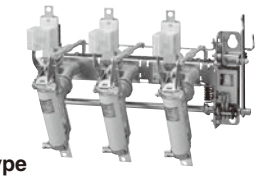

LBS type

■ LBS-type

3.6/7.2kV, 200 Amps 3-pole

The LBS is an air load break switch with attached power fuses. A striker is incorporated into this unit, a feature which is not found in conventional load break switches.

The striker is a trip mechanism which operates the moment the fuse blows. When this occurs the striker causes all 3-pole to open at the same time. If air load break switches do not have this striker feature it is possible for some of the phases to remain alive after the fuse has blown, so resulting in a dangerous situation. This FUJI feature adds to the safety of the electrical system.

As LBS-type air load break switches are provided with a built-in auto trip mechanism the R290B and R293B remote gang-operated mechanisms cannot be fitted.

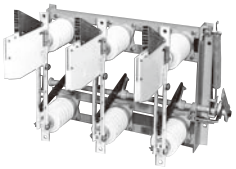

RF type

■ RF-type

12/24/36kV up to 1200 Amps 3-pole

The RF-type load break switch consists of a main blade, an auxiliary blade and an arc chute. The auxiliary blade is located at the arc chute and connected with the main blade. It will make contact at the same time as the main blade. The auxiliary blade will be momentarily held in contact in the arc chute at the time when the main blade opens. Once the main blade has reached the limit of travel the auxiliary blade will rapidly return to its position against the main blade under the influence of stored energy in the spring. This quick-break device functions effectively even when manually operated, and since the contact moves at high speed the arc is rapidly elongated and gas-cooled in the arc chute.

■ General specification of switch body

Description			LBS type		LB type					
					without shunt trip device				with shunt trip device	
			LBS-6A/200 LBS-6A/200F	**LBS-6A/210 LBS-6A/210F**	**LB-6/100**	**LB-6/200**	**LB-6/400**	**LB-6/600**	**LB-6/100f**	**LB-6/200f**
Rated	Voltage	(kV)	7.2/3.6	7.2/3.6	7.2/3.6	7.2/3.6	7.2/3.6	7.2/3.6	7.2/3.6	7.2/3.6
	Current	(A)	200	200	100	200	400	600	100	200
	Short-time current (1 sec.)	(kA)	–	–	4	8	12.5	8	4	4
	Making short-circuit current	(kA)	–	–	10	20*1	31.5*1	20*1	10	10
	Frequency	(Hz)	50/60	50/60	50/60	50/60	50/60	50/60	50/60	50/60
Insulation	Dielectric strength (1 minute)	(kV)	22	22	22	22	22	22	22	22
	BIL (1.2 × 50μs)	(kV)	60	60	60	60	60	60	60	60
Main active load breaking capacity		(A)	200	200	100	200	400	200	100	200
Cable charging breaking capacity		(A)	10	10	10	10	10	10	10	10
Transformer off load breaking capacity		(A)	10	10	5	10	20	10	5	10
Capacitor breaking current		(A)	50	50	30	30	50	30	30	30
Fuse	Holder with blown indicator		–	–	–	FH-2	FH-2	–	–	FH-2
	Holder without blown indicator		–	–	–	FH-1	FH-1	–	–	FH-1
	Link		JC-6*4	JC-6*5	–	HF337E	HF337E	–	–	HF337E
					–	HF338E	HF338E*2		–	HF338E
	Interrupting capacity	(kA)	40	40	–	40*3	40*3	–	–	40*3

Description			RF250 type	RF248 type		
			RF250III/20/600	**RF248III/20/600**	**RF248III/20/1200**	**RF248III/30/600**
Rated	Voltage	(kV)	12/24	12/24	12/24	36
	Current	(A)	600	600	1200	600
	Short-time current (1 sec.)	(kA)	22	22	27	22
	Making short-circuit current	(kA)	40	40	40	40
	Frequency	(Hz)	50/60	50/60	50/60	50/60
Insulation	Dielectric strength (1 minute)	(kV)	50	50	50	70
	BIL (1.2 × 50μs)	(kV)	125	125	125	170
Main active load breaking capacity		(A)	600	75	75	50
Cable charging breaking capacity		(A)	20	20	20	15
Transformer off load breaking capacity		(A)	20	10	10	10
Capacitor breaking current		(A)	600	75	75	50

Note: *1: 20kA when operated by R290-B.
10kA when operate by R293B.
*2: 200A is maximum for fuse-link.
*4: 75A is maximum for fuse-link.
*3: 31.5kA when 200A power fuse is used at 7.2kV.
*5: 100A is maximum for fuse-link.

LBS and LB types

■ Construction

Arc extinguishing chute

FUJI new LBS and LB type airload break switches are compact and have superior safety characteristics. This is mainly due to the newly-developed arc extinguishing chamber.

■ Features

1. The arc extinguishing chute is so designed that it is enclosed on three sides and the arc-extinguishing method uses a "narrow-gap arc-extinguishing method". Since the chute is closed in three directions the arcs and ionized gas are not dispersed to the back thus ensuring safety. Moreover, the gap of the arcing chamber is narrow so enabling the high temperature gas to be abruptly cooled thus ensuring a highly efficienty extinction of arc.
2. Ω shaped rotary movable blade arc contacts are employed. These contacts are designed to carry out the interruption while rotating. This design is aimed at improving the interrupting performance, and as arcs are not ejected in the direction of the operator there is greater safety.
3. The contacts use a tandem method in which an arc contact and a main contact are provided for each pole.
The operation is carried out as follows:
When the LB switch is interrupted at high speed the load current is com-mutated to the arc contact immediately before the main contact being opened.

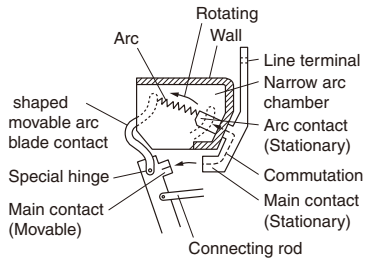

Principle of arc extinguishing chamber
(Diagramatic only)

■ Shunt trip mechanism

The shunt trip mechanism will trip the LB switch when a 100V AC or DC is applied to the coil. This enables tripping to be carried out from a distance. The trip coil for AC use has a continuous rating and power consumption is 50VA.

The trip coil for DC use has a short-time rating of 5 second.

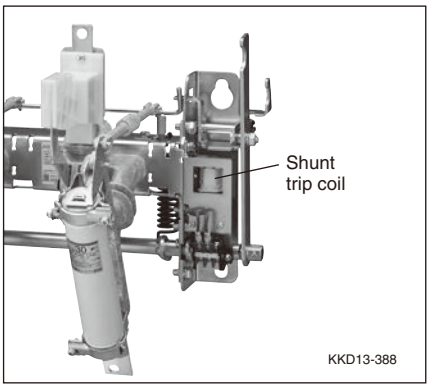

Ratings

Switch body	Coil ratings	Operating time
LBS-6A/200F	100/110V AC•DC 3A, 5 sec.	Max. 0.1 sec.
LBS-6A/210F		
LB-6/100f	100/110V AC•DC AC: Continuous DC: 5 sec.	
LB-6/200f		

Air load break switches
Accessories/LB type

■ Accessories/LB type

● Auxiliary switches/AUX-3, AUX-4

The auxiliary switches are available in AUX-3 and AUX-4 types. The AUX-3 is designed to be fitted to 100AF LB switches and AUX-4 to 200AF and above. The AUX-3 and AUX-4 auxiliary switches are available in kits which consist of a switch body (2NO + 2NC), mounting and connecting lever and screws. They can be used for open-close indication and interlocking circuits.

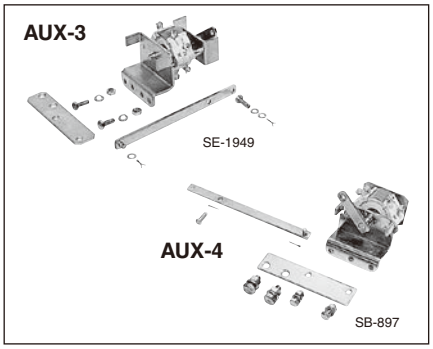

Type	Use with	Ratings
AUX-3	100A frame	100/110V DC 15A 200/220V AC 15A
AUX-4	200A to 600A frames	

Contact arrangement

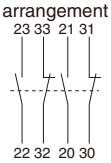

● Left-hand lever handle/LB-LH

LB switches with ratings of 200AF and above can be fitted with operating handles on the left hand side. Use LB-LH handle in this case which is sold separately. Please note that the lever for right handle use must not be fitted on the left-hand side as this would not allow sufficient safety distance. If left handed handled switches are required for switches of 200AF and above with shunt trip mechanism they must be modified at the FUJI factory. In this case specify LB-6/200fL when ordering.

The standard type handle (Right) and the LB-LH left handle lever (Left).

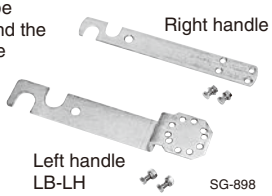

Standard type LB-6/200

This shows a LB-6/200 switch fitted with a LB-LH handle.

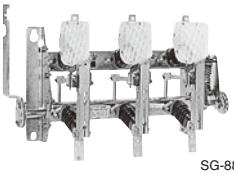

● Gang-operated mechanism

Normally switching is carried out by a stick, but remote control can be carried out either manually or by a motor-driven mechanism. Contact FUJI for details.

● Manual operating mechanism

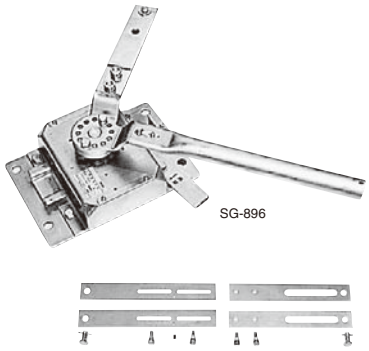

Type	Interlock coil		Contact for crank handle
	Unlock coil energized	Lock coil energized	
R290-B	–	–	–
R290-BDS	100/110V DC, 0.1A	–	1NC (110V DC, 1.3A)
R290-BAS	100/110V AC, 0.1A	–	1NC (110V DC, 1.3A)
R290Z-BAS	–	100/110V AC, 0.1A	1NC (110V DC, 1.3A)

● Motor-driven mechanism

Type	Motor ratings	
R293B-1	100/110V AC DC	8.8A
R293B-2	200/220V AC DC	4.4A

R293B

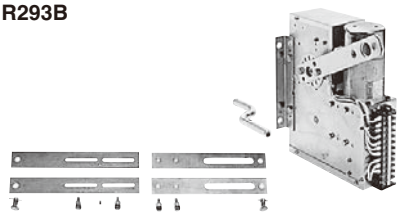

● Control unit for motor-driven mechanism

R293X is a control unit with a motor-driven mechanism. It consists of two industrial relays and all that is necessary to connect it to the motor unit or an on-off switch.
For the connection diagram, refer to Page E1-32.

Type	Operating voltage	Use with
R293X-1	100/110V AC	R293B-1
R293X-2	200/220V AC	R293B-2
R293X-3	100/110V DC	R293B-1

R293X

● Fuse holders/FH-1, FH-2

These holders are for attaching power fuses to air load break switches. The FH-1 holders fit the 3-pole holder frame only. The FH-2 holders are fitted with fuse blown indicating switches (SPDT). LB switches with ratings of 200A and 400A only can be fitted with these holders. The holders accept FUJI HH fuses with ratings from 5A to 200A. When 100AF switches with power fuses are required, use the LBS type. The appropriate fuse type is the JC series. Max. 200A power fuse can be fitted to 200AF and 400AF switches. Fuse-links are available with overall lengths of either 266mm or 366mm. However, if the position of the hole on the frame is changed either of these fuses can be fitted.

Type	Contact ratings	Use with
FH-1	–	200, 400A frame
FH-2	100V DC 0.6A 110V AC 6A 220V AC 6A (Inductive load)	

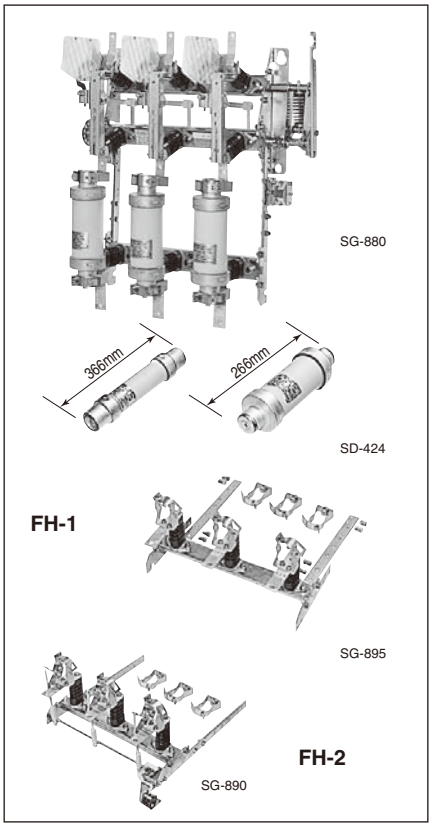

■ Accessories/LBS type

● Shunt trip mechanism

This mechanism permits remote tripping and when a 100V DC or AC is applied to the trip coil an interruption is carried out.
It has a continuous rating when used with AC but a short time rating of 5 secs when connected to a DC supply. Please connect the auxiliary contacts (1NO) on the LBS switches in series in order to prevent the coil from being burnt when operating on DC.
Specify "LBS-6A/200F" or "LBS-6A/210F" when ordering and switches will be shipped with trip mechanism factory-assembled.

Coil ratings	Operating time
100/110V AC•DC 3A AC: Continuous DC: 5 sec.	0.1 sec. or less

● Auxiliary switches/AUX-7, AUX-8

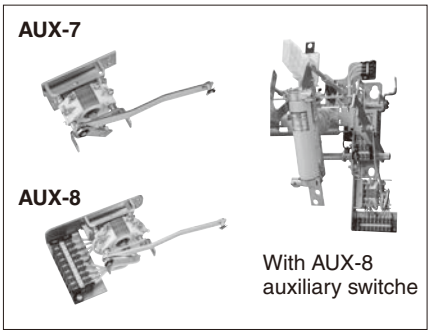

These switches provide an open-closed indication and can be used for interlocking circuits. The AUX-7 and AUX-8 type auxiliary switches are sold as separate kits. They are easily fitted to the switch body and are supplied with instruction manual. The contact arrangement is 2NO + 2NC.

Type	Ratings	Arrange-ment	Terminal block	Mass (kg)
AUX-7	100/110V DC, 15A 200/220V AC, 15A	20 30 22 32 21 31 23 33	None	0.5
AUX-8			Available	0.7

● Blown-fuse indicators/AL-3C

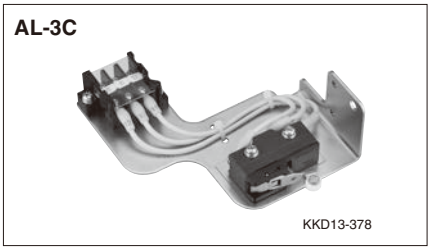

The AL-3C will provide an alarm when a fuse is blown.
These units are easily fitted to the LBS switches. The contact arrangement is SPDT and it has a momentary action of 25ms. It, therefore, requires a self-hold circuit as shown in the diagram.

● Contact specification

Contact ratings	Contact arrangement	Type	Mass (kg)
125V AC/DC Resistive load 10A (Normally close) 10A (Normally open) Inductive load 7.5A (Normally close) 6A (Normally open) 250V AC/DC Resistive load 3A (Normally close) 3A (Normally open) Inductive load 2A (Normally close) 1.5A (Normally open)	11 12 13	**AL-3C**	0.3

● Power fuses JC-6/5 to JC-6/100

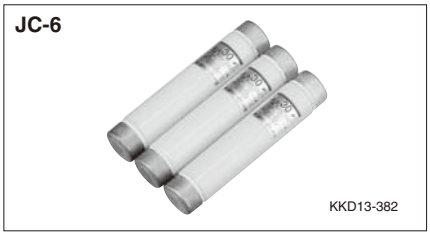

LBS switches require fuses and these are sold separately.
Power fuses are selected to meet the load requirements and prices differ according to the ampere ratings. It is therefore necessary to specify the fuse rating when LBS switches are ordered. The fuses are shipped in cartons holding a set of three pieces.
The following table lists fuse ratings for general use.

Type	Ratings			
	Voltage (kV)	Interrupting current (kA)	Rated* current (A)	Mass (kg)
JC-6/5	3.6/7.2	40	5	0.6
JC-6/10			10	
JC-6/12.5			12.5	
JC-6/15			15	
JC-6/20			20	
JC-6/30			30	
JC-6/40			40	
JC-6/50			50	
JC-6/60			60	
JC-6/75			75	
JC-6/100			100	1.1

* General purpose (G-type)

● Barriers

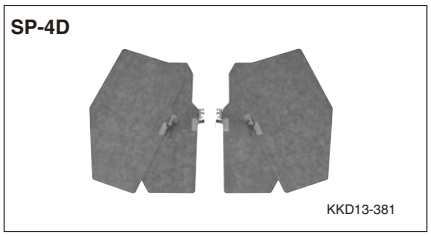

The LBS switches have an adequate insulation distance and when installed in the metal-enclosed cubicles barriers are not required. When used in open-type cubicles or under "open" conditions barriers can be supplied to prevent damage from small animals occuring. These are sold separately.

Type	Number of barriers
SP-4D	4

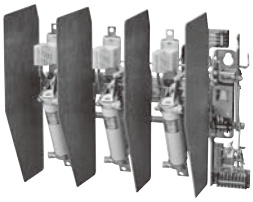

KKD13-383

With SP-4D barriers

● Base adaptor

Type	Mass(kg)
LBS-AD1	1.0

Base adapter (LBS-AD1) shape and mounting pitch

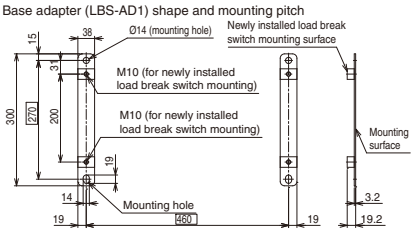

Air load break switches

■ Attachment accessories and modification kits

Switch body type	Shunt trip	Auxiliary switch	Operating mechanism			Left lever handle	Power fuse link	Fuse holders	
			Manual remote operating	Motor driven remote operating	Control unit			Without blown indicator	With blown indicator
LBS-6A/200	–	▲AUX-7 ▲AUX-8	–	–	–	–	▲JC-6/□	●	▲AL-3C
LBS-6A/200F	●								
LBS-6A/210	–	▲AUX-7 ▲AUX-8	–	–	–	–	▲JC-6/100	●	▲AL-3C
LBS-6A/210F	●								
LB-6/100	–	▲AUX-3	–	–	–	–	–	–	–
LB-6/100f	●								
LB-6/200	–	▲AUX-4	▲R290B	▲R293B	▲R293X	▲LB-LH	▲HF337 HF338	▲FH-1	▲FH-2
LB-6/200f	●		–	–	–	–			
LB-6/200fL	●					●			
LB-6/400	–		▲R290B	▲R293B	▲R293X	▲LB-LH			
LB-6/600	–						–	–	–

Note: ● Factory assembled ▲ Customer assembled – Not available

● LB type

LB-6/100 SG-879

No. of pole	Rated voltage (kV)	Rated current (A)	Shunt trip	Handle attaching angle	Mass (kg)	Type
3	7.2/3.6	100	–	Fixed	9	**LB-6/100**
		100	Provided	Fixed	9.5	**LB-6/100f**
	7.2/3.6	200	–	Adjustable	11	**LB-6/200**
		200	Provided	Fixed	14	**LB-6/200f**
		200	Provided	Fixed	15	**LB-6/200fL**
	7.2/3.6	400	–	Adjustable	12	**LB-6/400**
	7.2/3.6	600	–	Adjustalbe	14	**LB-6/600**

● LBS type

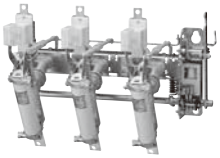

LBS type
Compact size KKD13-388

No. of pole	Rated voltage (kV)	Rated current (A)	Shunt trip	Handle attaching angle	Mass (kg)	Type	Fuse rated curent
3	7.2/3.6	200	–	Fixed	8.5	**LBS-6A/200**	Type JC:
		200	Provided	Fixed	9	**LBS-6A/200F**	5 to 75A
3	7.2/3.6	200	–	Fixed	8.5	**LBS-6A/210**	Type JC:
		200	Provided	Fixed	9	**LBS-6A/210F**	100A

■ Ordering information

Specify the following:
1. Type number or ordering code
2. Attachment accessories and modification kits if required.

Example (Type number)
- LB-type air load break switch..... LB
- Rated voltage 7.2kV ..... –6
- Rated current 200 A 200
- With shunt trip device ..... f

Type number LB-6/200f
and
Type number of fuse link..... HF338E/6/75
(Rated current 75 A)
Fuse holder with fuse blown indicator FH-2

■ Type number nomenclature

LB - 6 / 200 f L

Handle
Blank: Standard (Right lever handle)
L: Left lever handle (200A only)

Shunt trip device
Blank: Without shunt trip device
f: With shunt trip device

Rated current
100: 100A
200, 210: 200A
400: 400A
600: 600A

Rated voltage
6: 7.2/3.6kV

Basic type
LB or LBS

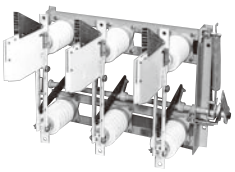
SE-292

• RF type 12kV to 36kV

No. of poles	Ratings			Auxiliary switch	Operating motor ratings Type R294/10D200	Type	Mass (kg)
	Voltage (kV)	Current (A)	Making & breaking current (A)				
3	12/24	600	75	– 2NO+2NC 2NO+2NC *	– – 100/110V DC 32.6A (max.)	**RF248III/20/600** **RF248III/20/600W** **RF248III/20/600GW**	105 105 105
		1200	75	– 2NO+2NC 2NO+2NC *	– – 100/110V DC 32.6A (max.)	**RF248III/20/1200** **RF248III/20/1200W** **RF248III/20/1200GW**	125 125 125
		600	600	– 2NO+2NC 2NO+2NC *	– – 100/110V DC 32.6A (max.)	**RF250III/20/600** **RF250III/20/600W** **RF250III/20/600GW**	105 105 105
	36	600	50	– 2NO+2NC 2NO+2NC *	– – 100/110V DC 32.6A (max.)	**RF248III/30/600** **RF248III/30/600W** **RF248III/30/600GW**	140 140 140

Note: * 2NO+2NC auxiliary contact required for internal wiring purpose.

■ Ordering information

Specify the following:

1. Type number or ordering code

■ Type number nomenclature

RF 250 III / **6** / **600** □ W

Basic type
RF250, RF248

Poles
III: 3-pole

Rated voltage
20: 12/24kV
30: 36kV

Rated current
600: 600A
1200: 1200A

Operating
Blank: Stick-operated
G: Manual remote-operated by R290-B
Motor remote-operated by R294/10D200

Auxiliary switch
Blank: Without auxiliary switch
W: With auxiliary switch (2NO+2NC)

■ Dimensions, mm

• LB-6/100

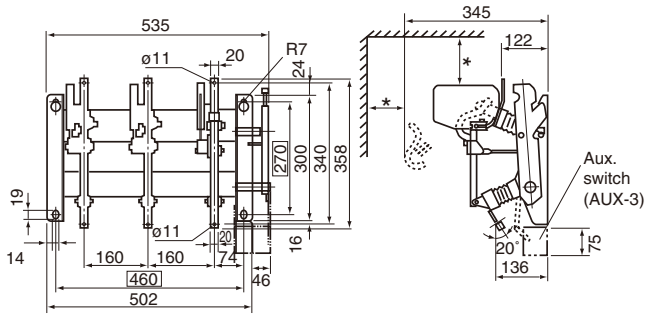

• LB-6/100f

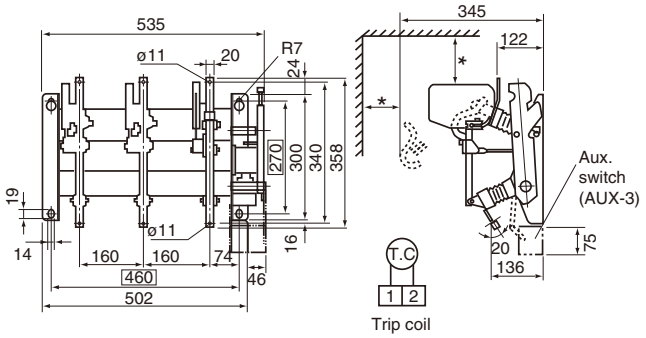

* Arc space: Over 100mm
For other LB types, arc space (over 100mm) is necessary.

Air load break switches
LB type

■ Dimensions, mm

- **LB-6/200**

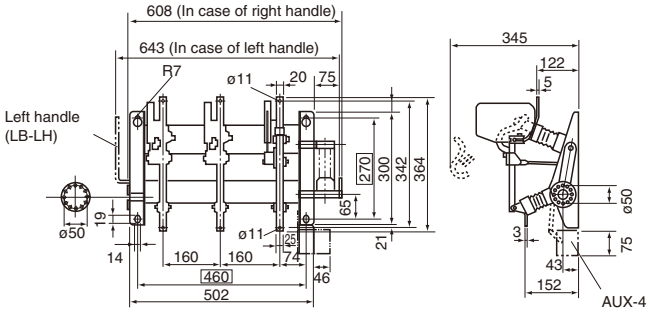

- **LB-6/200f**

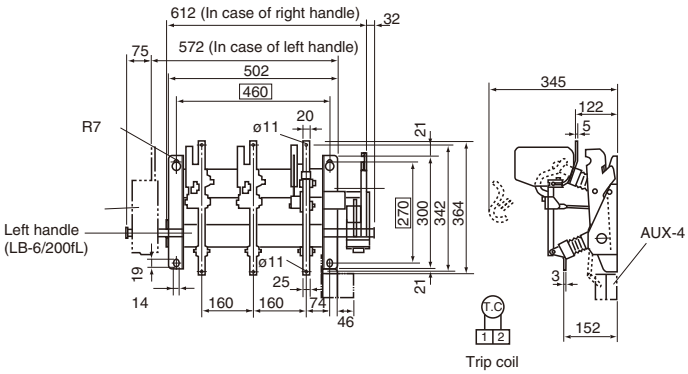

- **LB-6/400**

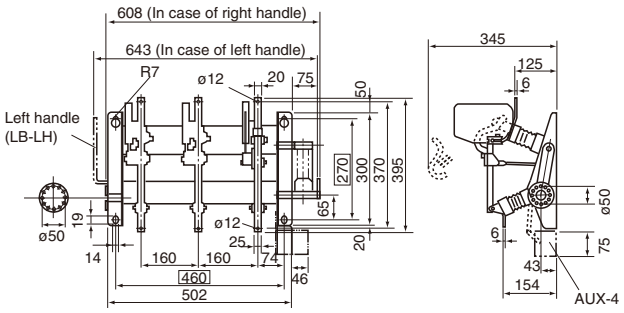

- **LB-6/600**

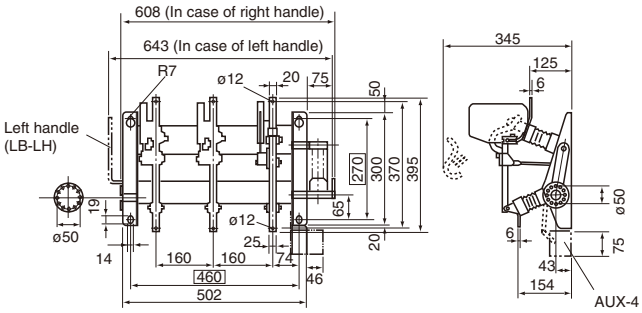

- **LB-6/200-400 with fuse holder (FH)**

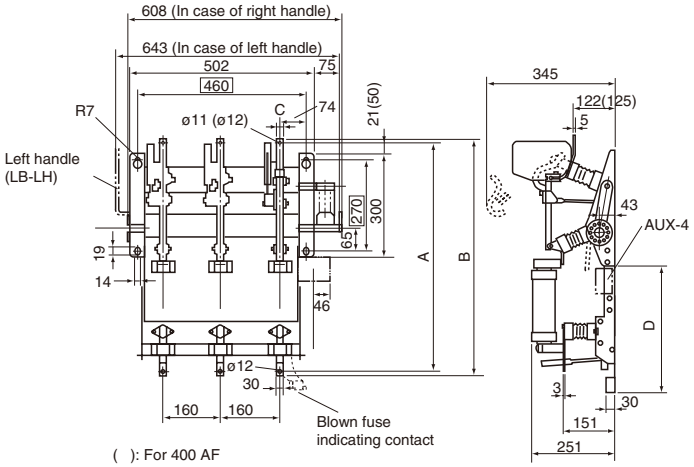

- **LB-6/200f with fuse holder (FH)**

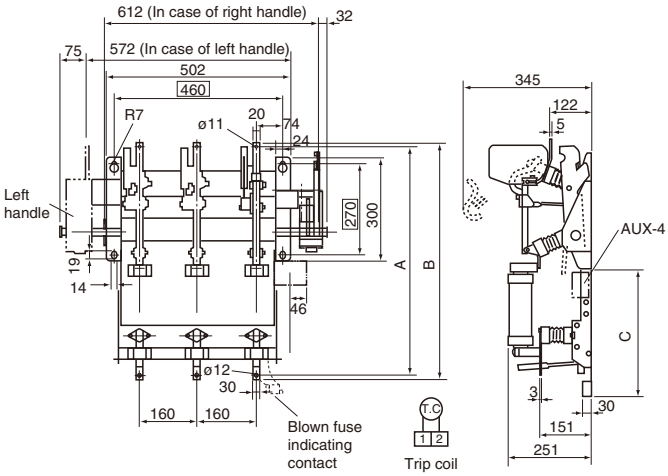

Type	Rated voltage	Combined fuse link	A	B	C	D
LB-6/200	3.6kV	HF337.8E/3/5 to 100	651	673	20	380
	7.2kV	HF337.8E/6/5 to 30				
	3.6kV	HF338E/3/150, 200	751	773	20	480
	7.2kV	HF338E/6/40 to 200				
LB-6/400	3.6kV	HF337.8E/3/5 to 100	675	700	25	380
	7.2kV	HF337.8E/6/5 to 30				
	3.6kV	HF338E/3/150, 200	775	800	25	480
	7.2kV	HF338E/6/40 to 200				

Type	Rated voltage	Combined fuse link	A	B	C
LB-6/200f	3.6kV	HF337.8E/3/5 to 100	651	673	380
	7.2kV	HF337.8E/6/5 to 30			
	3.6kV	HF338E/3/150, 200	751	773	480
	7.2kV	HF338E/6/40 to 200			

■ Dimensions, mm/Gang-operated mechanism

- **R290-B**

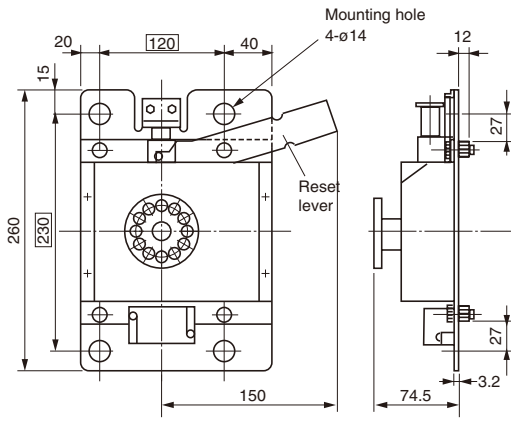

- **R293X**

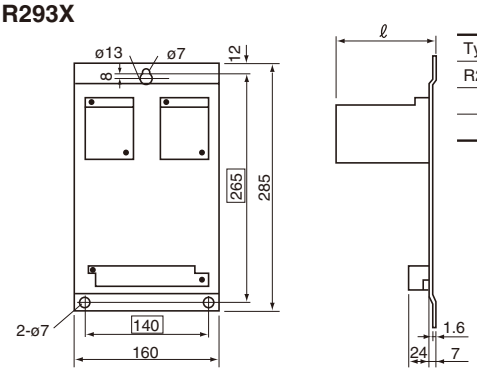

Type	ℓ
R293X-1	90
X-2	90
X-3	120

- **R293B**

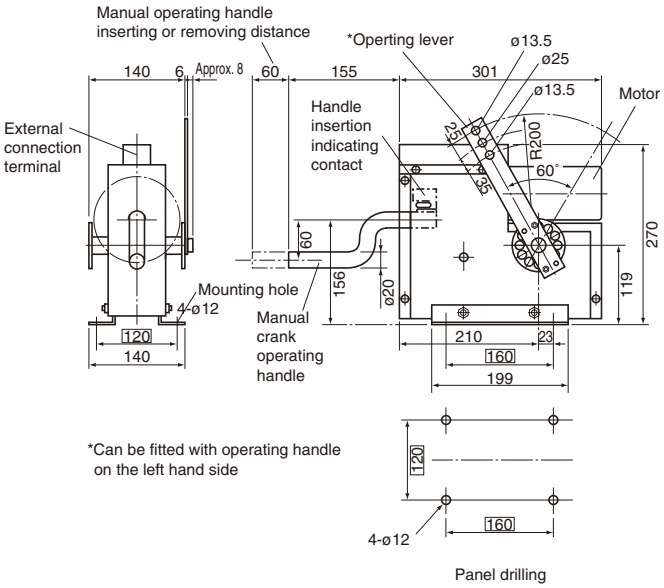

■ Wiring diagrams

- **R290-BDS**

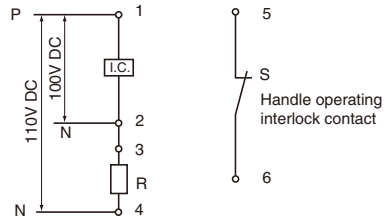

- **R290-BAS, R290Z-BAS**

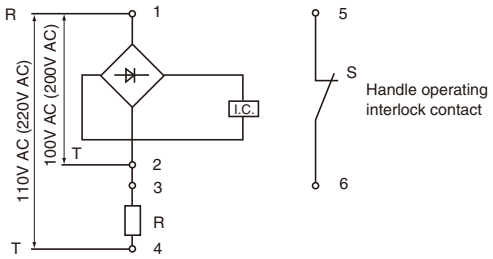

- **R293B, R293X**

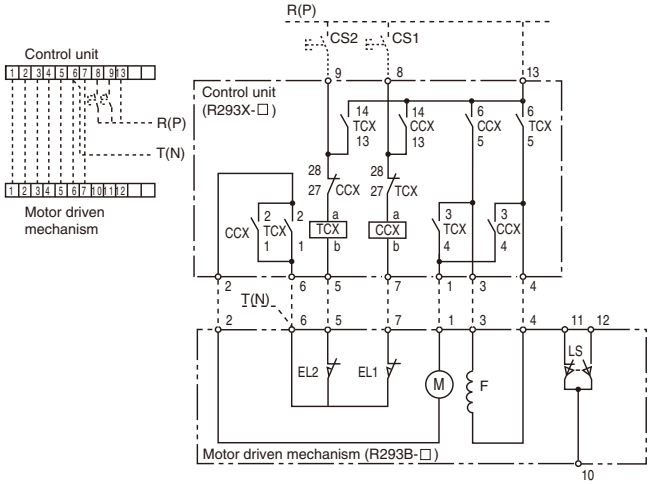

CS1 : ON switch (Not supplied)
CS2 : OFF switch (Trip) (Not supplied)
CCX : Magnetic contactor for closing
TCX : Magnetic contactor for tripping
EL1 : End limit switch for closing
EL2 : End limit switch for tripping
F : Motor/field
M : Motor/armature
LS : Crank handle insertion indicating contact
10-11 ON: Removing handle
10-12 ON: Inserting handle

Note: For gang-operated diagrams, contact FUJI.

Air load break switches
LBS type

■ Dimensions, mm

- **LBS-6A/200, 200F**

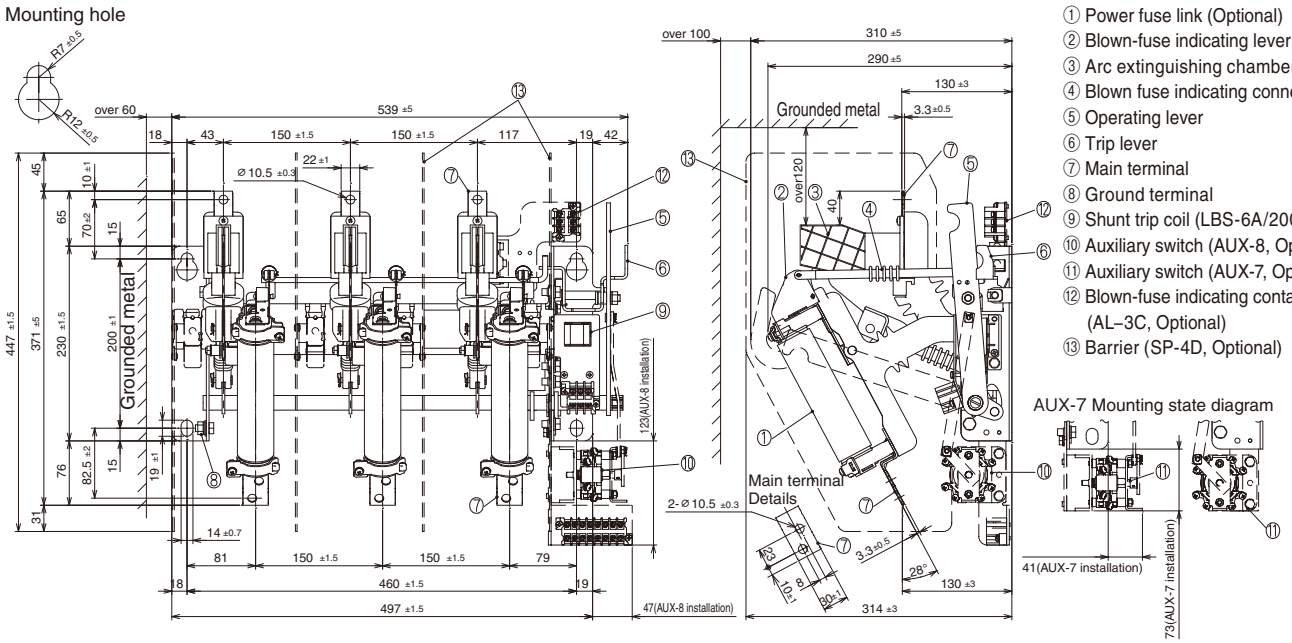

① Power fuse link (Optional)
② Blown-fuse indicating lever
③ Arc extinguishing chamber
④ Blown fuse indicating connection rod
⑤ Operating lever
⑥ Trip lever
⑦ Main terminal
⑧ Ground terminal
⑨ Shunt trip coil (LBS-6A/200F only)
⑩ Auxiliary switch (AUX-8, Optional)
⑪ Auxiliary switch (AUX-7, Optional)
⑫ Blown-fuse indicating contact (AL–3C, Optional)
⑬ Barrier (SP-4D, Optional)

- **LBS-6A/210, 210F**

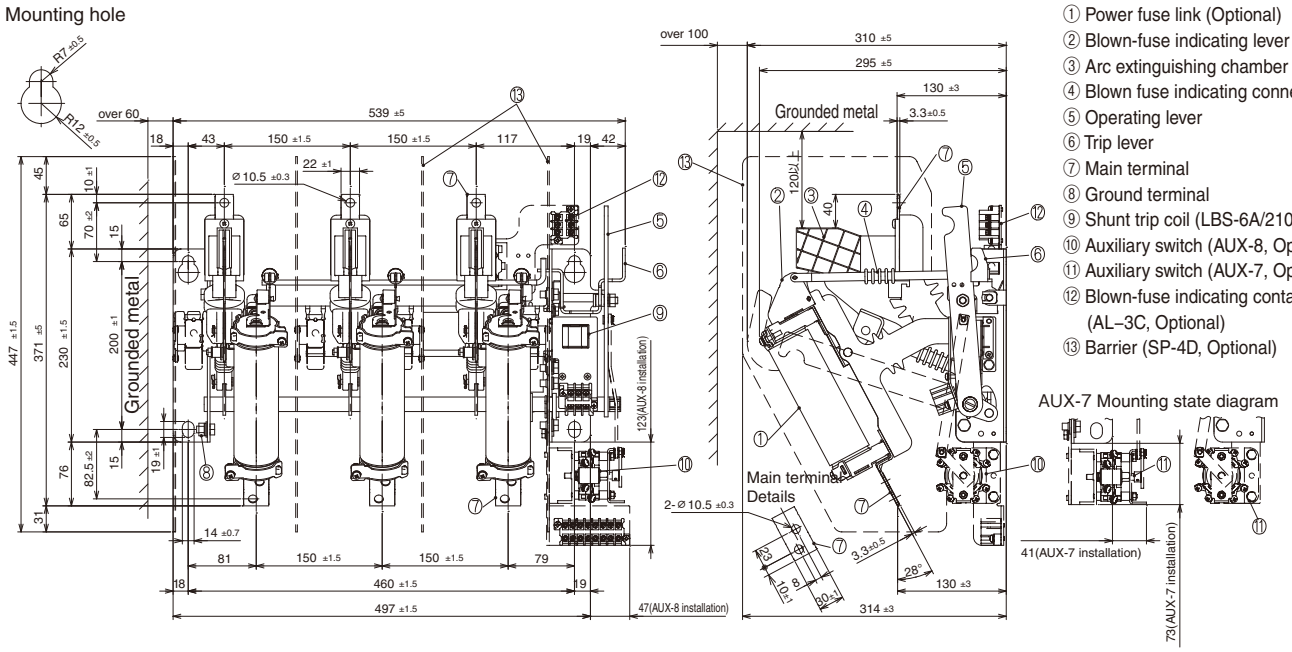

① Power fuse link (Optional)
② Blown-fuse indicating lever
③ Arc extinguishing chamber
④ Blown fuse indicating connection rod
⑤ Operating lever
⑥ Trip lever
⑦ Main terminal
⑧ Ground terminal
⑨ Shunt trip coil (LBS-6A/210F only)
⑩ Auxiliary switch (AUX-8, Optional)
⑪ Auxiliary switch (AUX-7, Optional)
⑫ Blown-fuse indicating contact (AL–3C, Optional)
⑬ Barrier (SP-4D, Optional)

- **Accessories**
- **Fuse link**

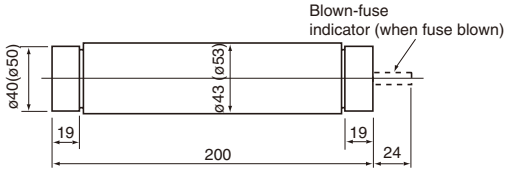

( ) : JC-6/100

■ Wiring diagrams (Shunt trip operating circuit)

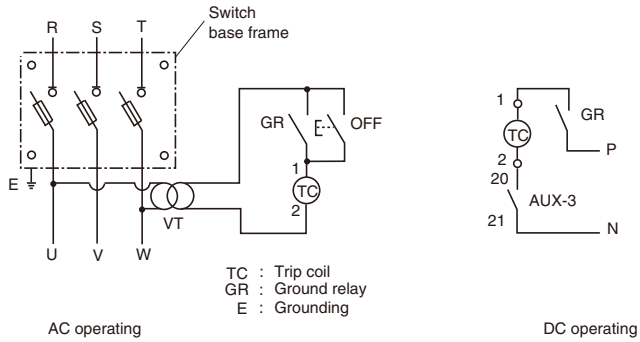

■ Dimensions, mm

- **RF250III/20/600**

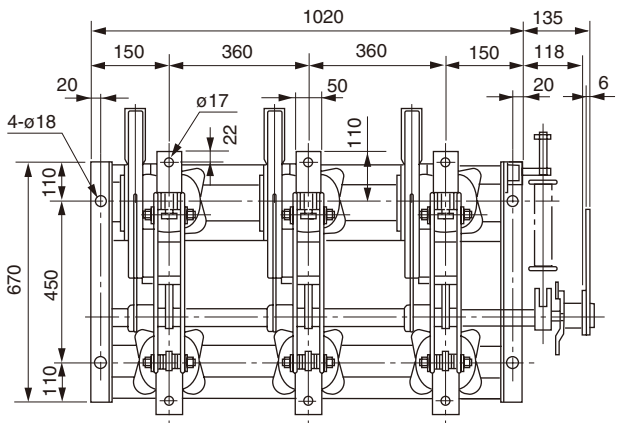

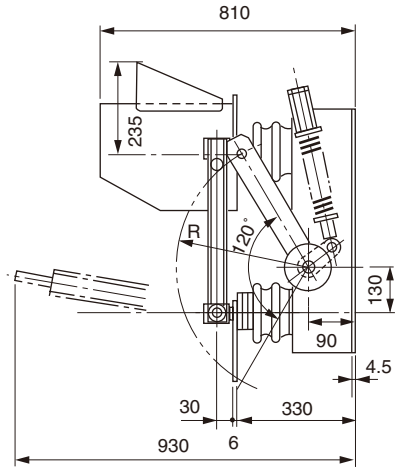

- **RF248III/20/600**

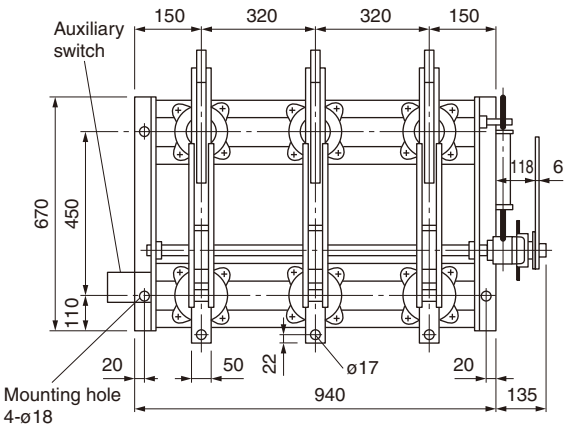

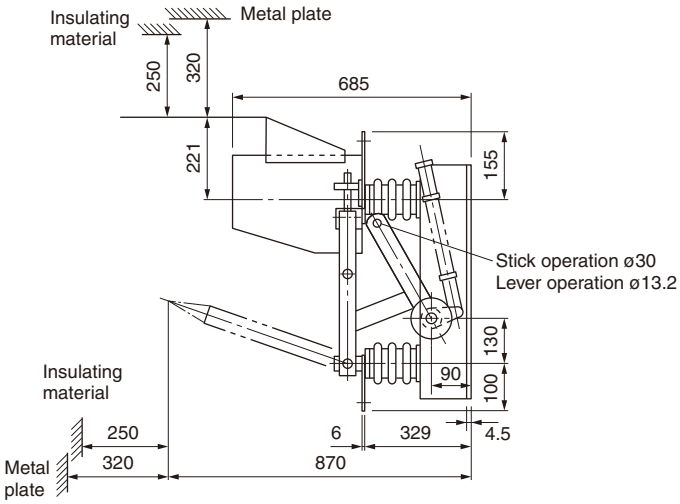

- **RF248III/20/1200**

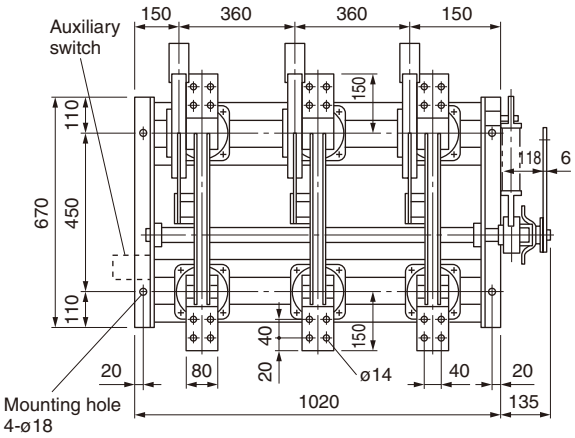

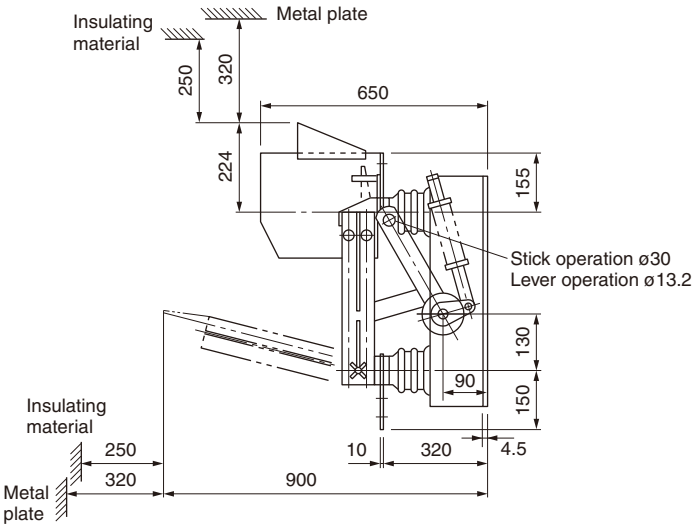

Air load break switches
RF type

■ Dimensions, mm

- **RF248III/30/600**

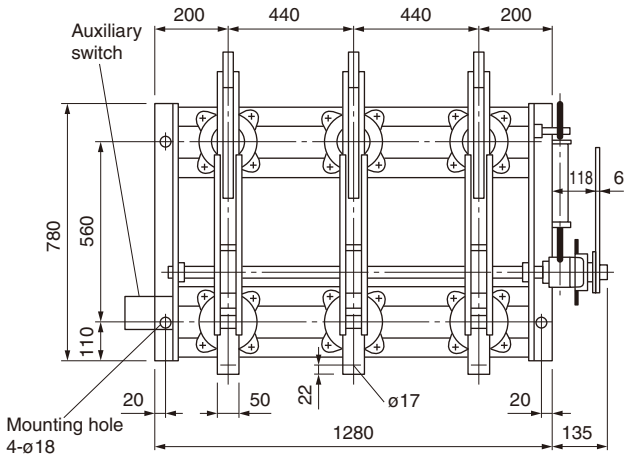

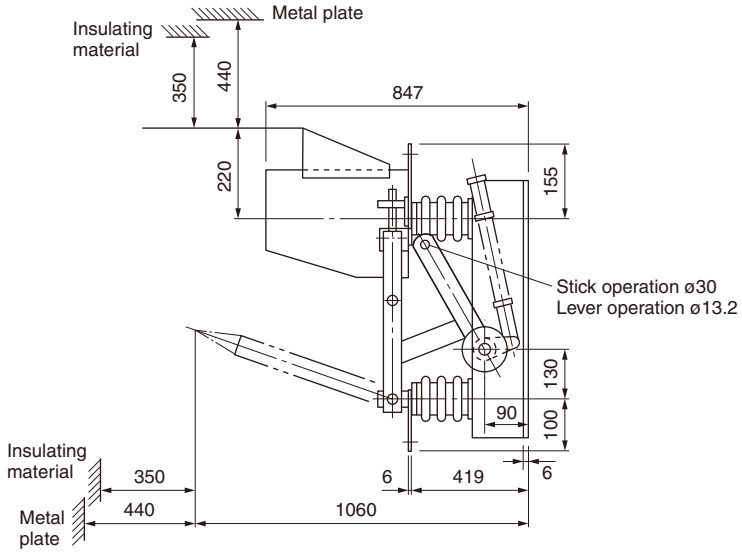

VT and CT

3.45/6.9/11.5/23/34.5kV
Up to 5000 Amps

■ Description

Fuji epoxy resin molded type CT and VT feature excellent water- and damp-proof characteristics. There is no danger of insulation deterioration. Their good thermal and mechanical performance make them suitable for a wide range of applications, while the initial cost of VT and CT are very reasonable.

■ Features

- Accuracy: Class 1.0
- No corona is produced.
- FUJI's advanced manufacturing techniques eliminate cracking of molded enclosure.
- VT is provided with a current-limiting fuse to give a large interrupting capacity.

■ Selection note

1. Primary current of CT must be 150% of the load current of measuring.
2. Rated overcurrent constant must be considered when used for circuit protection.
3. Accuracy class, rated burden and maximum voltage.
4. When determining VA, add secondary wiring or cabling burden.

■ General specifications

Current transformer (CT)
- Accuracy class: 1.0
- Maximum voltage: Up to 34.5kV
- Rated frequency: 50/60Hz
- Secondary current: 5A

Voltage transformer (VT)
- Accuracy class: 1.0
- Maximum voltage: Up to 33kV
- Rated frequency: 50/60Hz
- Secondary voltage: 110V

■ Current transformers

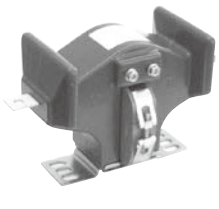

RC15-6C

N33-142-12

RC15-6C **CE3-10**

• Epoxy resin molded CT NCE, CEC, CEA and CE types

NCE, CEC and CEA are used in distribution circuits of up to 6.9kV.
Only the primary and secondary windings are molded in epoxy resin.
CE type is designed for use in circuits between 11.5 – 34.5kV. Iron core windings, terminal stand and insulation are all integrated into one body and encapsulated with epoxy resin in a vacuum. The iron core is fabricated from silicon steel plate which ensures an excellent electrical performance. The corona and insulating characteristics are excellent so assuring a long service life. There is no fear of the epoxy resin cracking. The transformer is compact in design and takes up little space on installation.
RC15 type: 5/5–750/5 Amps, 6.9kV
NCE type: 10/5–400/5 Amps, 6.9kV
CEC type: 10/5–200/5 Amps, 6.9kV
CEA type: 300/5–2000/5 Amps, 6.9kV
CE type: 50/5–5000/5 Amps, 11.5–34.5kV

■ Types and ratings

See pages E1-39 and E1-41.

■ Dimensions

See pages E1-42 to E1-44.

■ Voltage transformers

CP-624

N33-142-12

NPE12-6FA **PE4-30**

• Epoxy resin molded VT NPE, PEC and PE types

These types have both primary and secondary windings molded in epoxy resin. The insulating resin is also strong against chemical attack which makes the transformer suitable for use in chemical plants and other similar locations.
PE type has windings, core and terminals incorporated into one body. It can be used for measuring voltages in the 11kV–33kV range.

■ Types and ratings

See pages E1-40.

■ Dimensions

See pages E1-45.

Instrument transformers
General information

■ Selection table/CT

Maximum voltage	3.45/6.9kV	11.5kV	23kV	34.5kV
Type	RC15-6C (5–750A) NCE2-6B (10–400A) CEC1-6M (10–200A) CEA1-6M (300–2000A)	CE3-10 (50–1200A) CE5-10 (1500–2000A) CE2-10 (1500–4000A) CE6-10 (5000A)	CE1-20 (50–1200A) CE5-20 (1500–2000A) CE2-20 (1500–4000A) CE6-20 (5000A)	CE4-30 (50–1200A)

■ Selection table/VT

Voltage class	3kV	6kV	10kV	15kV	20kV	30kV
Type	NPE12-3FA (50VA) NPE12-3FA (100VA) PEC2-3FA (200VA)	NPE12-6FA (50VA) NPE12-6FA (100VA) PEC2-6FA (200VA)	PE10-10 PE11-10	PE10-15	PE12-20	PE4-30

■ Ordering information

Current transformer (CT)
Specify the following:
1. Type number
2. Rated voltage
3. Rated primary current
4. Rated secondary current
5. Rated frequency
6. Rated burden
7. Accuracy class

Voltage transformer (VT)
Specify the following:
1. Type number
2. Rated primary voltage
3. Rated secondary voltage
4. Rated frequency
5. Rated burden
6. Accuracy class

■ Type number nomenclature

• Current transformer

Up to 6.9kV

CEC1-6M/100

- **Primary current** 5 to 2000A
- **Series name** B, C, M
- **Rated voltage** 6 : 3.45/6.9kV
- **Basic type** NCE2, RC15 CEC1, CEA1

11.5 to 34.5kV

CE3-10

- **Rated voltage** 10: 11.5kV 20: 23kV 30: 34.5kV
- **Basic type** CE1, CE4 CE2, CE5 CE3, CE6

• Voltage transformer

Up to 6.6kV

NPE12-3FA/50

- **Rated burden** 50: 50VA 100: 100VA 200: 200VA
- **Rated primary voltage** 3: 3.3kV 6: 6.6kV
- **Basic type** NPE12 PEC1 PEC2

11 to 33kV

PE4-10

- **Rated primary voltage** 10: 11kV 15: 13.2kV 20: 22kV 30: 33kV
- **Basic type** PE4, PE10 PE11, PE12

■ Types and ratings

CT 3.45/6.9kV

Illustration	Max. voltage (kV)	Primary/Secondary current (A)	Type	Withstand current (kA/1s)	Mass (kg)	Technical information
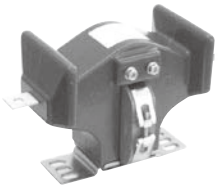 RC15-6C **RC15-6C**	6.9 (3.45 common use)	5/5	**RC15-6C/5**	0.2	4.5	• Rated overcurrent constant (n): n > 10 (at burden 10VA) n > 5 (at burden 20VA) • Rated burden: 40VA • Accuracy class: 1.0 Insulation level Withstand voltage (AC 1min.) Primary: 22kV, Secondary: 2kV Basic-impulse insulation level: 60kV (full wave)
		10/5	**RC15-6C/10**	0.4	4.5	
		15/5	**RC15-6C/15**	0.6	4.5	
		20/5	**RC15-6C/20**	0.8	4.5	
		30/5	**RC15-6C/30**	1.2	4.5	
		40/5	**RC15-6C/40**	1.6	4.5	
		50/5	**RC15-6C/50**	2	4.5	
		60/5	**RC15-6C/60**	2.4	4.5	
		75/5	**RC15-6C/75**	3	4.5	
		100/5	**RC15-6C/100**	4	4.5	
		150/5	**RC15-6C/150**	6	4.5	
		200/5	**RC15-6C/200**	8	4.5	
		300/5	**RC15-6C/300**	12	4.5	
		400/5	**RC15-6C/400**	16	4.5	
		500/5	**RC15-6C/500**	20	4.5	
		600/5	**RC15-6C/600**	24	4.5	
		750/5	**RC15-6C/750**	30	4.5	
SH-1045 **CEC1-6M**	6.9 (3.45 common use)	10/5	**NCE2-6B/10**	0.4	7.5	• Rated overcurrent constant (n): n > 10 • Rated burden: 40VA • Accuracy class: 1.0 • Insulation level Withstand voltage (AC 1min.) Primary: 22kV, Secondary: 2kV Basic-impulse insulation level: 60kV (full wave)
		15/5	**NCE2-6B/15**	0.6	7.5	
		20/5	**NCE2-6B/20**	0.8	7.5	
		30/5	**NCE2-6B/30**	1.2	7.5	
		40/5	**NCE2-6B/40**	1.6	7.5	
		50/5	**NCE2-6B/50**	2	7.5	
		75/5	**NCE2-6B/75**	3	7.5	
		100/5	**NCE2-6B/100**	4	7.5	
		150/5	**NCE2-6B/150**	6	7.5	
		200/5	**NCE2-6B/200**	8	7.5	
		300/5	**NCE2-6B/300**	12	7.5	
		400/5	**NCE2-6B/400**	16	7.5	
SH-1046 **CEA1-6M**	6.9 (3.45 common use)	10/5	**CEC1-6M/10**	2.5	12	• Rated overcurrent constant (n): n > 10 • Rated burden: 25VA • Accuracy class: 1.0 • Insulation level Withstand voltage (AC 1min.) Primary: 22kV, Secondary: 2kV Basic-impulse insulation level: 60kV (full wave)
		15/5	**CEC1-6M/15**	3.75	12	
		20/5	**CEC1-6M/20**	5	12	
		30/5	**CEC1-6M/30**	7.5	12	
		40/5	**CEC1-6M/40**	10	12	
		50/5	**CEC1-6M/50**	12.5	12	
		75/5	**CEC1-6M/75**	18.75	12	
		100/5	**CEC1-6M/100**	25	12	
		150/5	**CEC1-6M/150**	25	12	
		200/5	**CEC1-6M/200**	25	12	
		300/5	**CEA1-6M/300**	25	10	
		400/5	**CEA1-6M/400**	25	10	
		500/5	**CEA1-6M/500**	25	10	
		600/5	**CEA1-6M/600**	25	10	
		750/5	**CEA1-6M/750**	25	10	
		1000/5	**CEA1-6M/1000**	25	10	
		1200/5	**CEA1-6M/1200**	25	10	
		1500/5	**CEA1-6M/1500**	25	10	
		2000/5	**CEA1-6M/2000**	25	10	

■ Types and ratings

VT 3300V – 33000V

Illustration	Primary/Secondary voltage (V)	Rated burden (VA)	Type	Interrupting capacity of fuse	Mass (kg)	Technical information
CP-624 **NPE12**	3300/110	50	**NPE12-3FA/50**	40kA*1	8.5	• Accuracy class: 1.0 • Insulation level
	6600/110	50	**NPE12-6FA/50**	40kA*1	8.5	
	3300/110	100	**NPE12-3FA/100**	40kA*1	8.5	NPE12-3FA, PEC2-3FA: BIL 45kV*2, 16kV AC
	6600/110	100	**NPE12-6FA/100**	40kA*1	8.5	
	3300/110	200	**PEC2-3FA/200**	40kA*1	14	NPE12-6FA, PEC2-6FA: BIL 60kV, 22kV AC
	6600/110	200	**PEC2-6FA/200**	40kA*1	14	
	11000/110	200	**PE11-10**	40kA*3	25	PE11-10, PE10-10: BIL 90kV, 28kV AC
	11000/110	200*6	**PE10-10**	40kA*3	38	
	13200/110	200*6	**PE10-15**	31.5kA*4	38	PE10-15: BIL 95kV, 34kV AC
	22000/110	200	**PE12-20**	40kA*5	41	PE12-20: BIL 125kV, 50kV AC
	33000/110	200	**PE4-30**	–	68	PE4-30: BIL 170kV, 70kV AC

Note: *1 Type PTFA-6, rated current 2A (provided with VT as standard) *2 BIL: Basic-impulse insulation level (full wave)
*3 Type JR-10/5 (optional), rated current 5A *4 Type JR-10N/5 (optional), rated current 5A *5 Type JR-20/5 (optional), rated current 5A
*6 400VA available

■ Types and ratings

CT 11.5kV – 34.5kV

Illustration	Max. voltage (kV)	Primary current (A) Single ratio	Primary current (A) Double ratio	Secondary current (A)	Type	Withstand current (kA/1s)	Mass (kg)	Technical information
 N33-142-12 **CE3-10**	11.5	50/5 75/5 100/5 150/5 200/5 300/5 400/5 500/5 600/5 750/5 1000/5 1200/5	– – 200-100 300-150 400-200 600-300 800-400 1000-500 1200-600 – – –	5	**CE3-10**	25	19 to 26	• Accuracy class: 1.0 • Rated overcurrent constant (n): n > 10 • Rated burden 15VA (Primary current 50A) 25VA (Primary current 75A) 40VA (Primary current over 100A) • Insulation level Dielectric strength: 28kV Basic-impulse insulation level: 90kV (full wave)
		1500/5 2000/5	– 2000-1000	5	**CE5-10**	25*	62	• Accuracy class: 1.0 • Rated overcurrent constant (n): n >10 • Rated burden: 60VA • Insulation level: Dielectric strength: 28kV Basic-impulse insulation level: 90kV (full wave)
 N33-142-12 **CE2-10** **CE2-20**		1500/5 2000/5 3000/5 4000/5	– 2000-1000 3000-1500 4000-2000		**CE2-10**	50	41 to 66	
		5000/5	5000-2500		**CE6-10**	50	41 to 66	
 N33-142-12 **CE1-20**	23	50/5 75/5 100/5 150/5 200/5 300/5 400/5 500/5 600/5 750/5 1000/5 1200/5	– – 200-100 300-150 400-200 600-300 800-400 1000-500 1200-600 – – –	5	**CE1-20**	25*	26 to 35	• Accuracy class: 1.0 • Rated overcurrent constant (n): n > 10 • Rated burden: 15VA (Primary current 50A) 25VA (Primary current 75A) 40VA (Primary current over 100A) • Insulation level Dielectric strength : 50kV Basic-impulse insulation level: 125kV (full wave)
		1500/5 2000/5	– 2000-1000	5	**CE5-20**	25*	62	• Accuracy class: 1.0 • Rated overcurrent constant (n): n > 10 • Rated burden: 60VA • Insulation level Dielectric strength: 50kV Basic-impulse insulation level: 125kV (full wave)
		1500/5 2000/5 3000/5 4000/5	– 2000-1000 3000-1500 4000-2000		**CE2-20**	50	41 to 66	
 N33-142-12 **CE4-30**		5000/5	5000-2500		**CE6-20**	50	41 to 66	
	34.5	50/5 75/5 100/5 150/5 200/5 300/5 400/5 500/5 600/5 750/5 1000/5 1200/5	– – 200-100 300-150 400-200 600-300 800-400 1000-500 1200-600 – – –	5	**CE4-30**	25	36 to 50	• Accuracy class:1.0 • Rated overcurrent constant (n): n > 10 • Rated burden: 15VA (Primary current 50A) 25VA (Primary current 75A) 40VA (Primary current over 100A) • Insulation level Dielectric level: 70kV Basic-impulse insulation level: 170kV (full wave)

Note: * Withstand current of 25kA/2s type is also available

Instrument transformers

■ Dimensions, mm/CT

RC15-6C

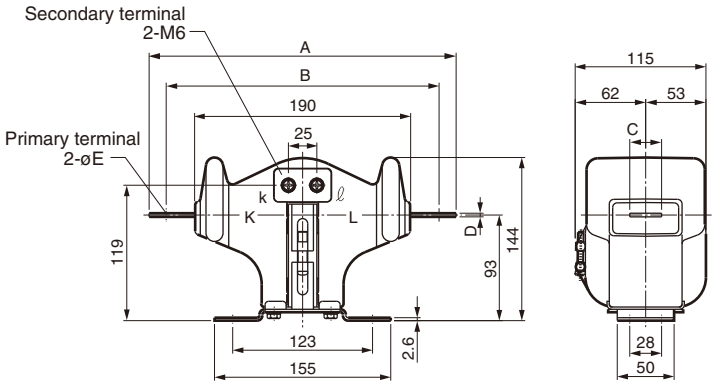

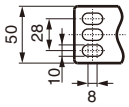

Primary current (A)	Dimensions (mm)				
	A	B	C	D	E
5–120A	245	221	25	2	9
150–200A	270	240	28	3.2	14
250–750A	300	250	50	5	18

NCE2-6B

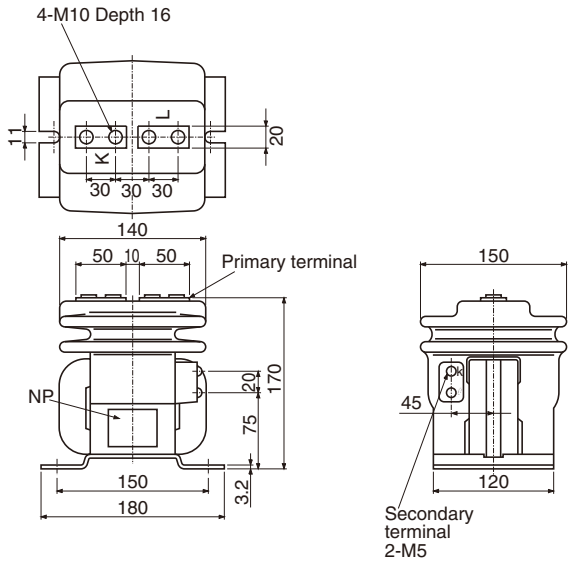

CEC1-6M

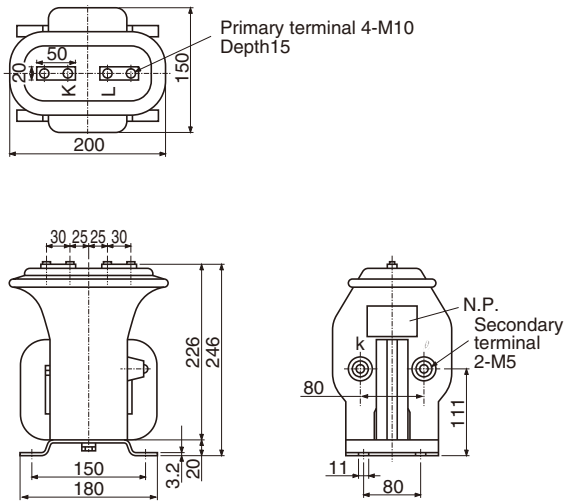

CEA1-6M

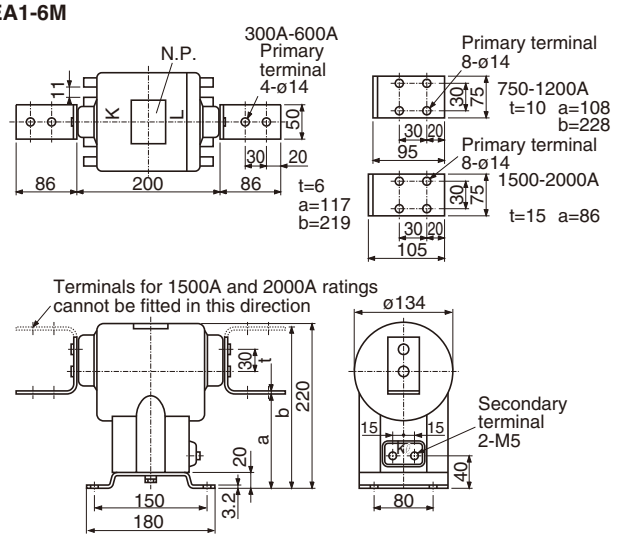

CE3-10

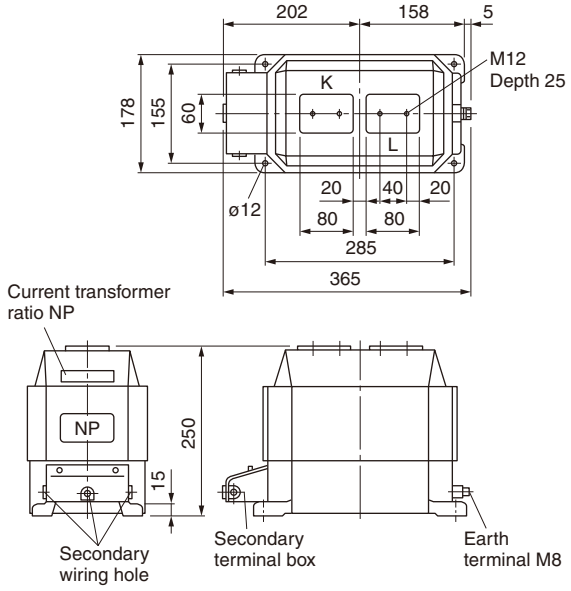

CE1-20

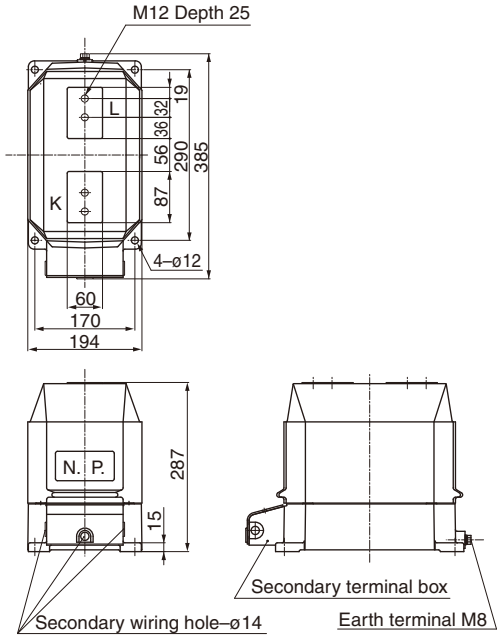

■ Dimensions, mm/CT

CE2-10, CE2-20

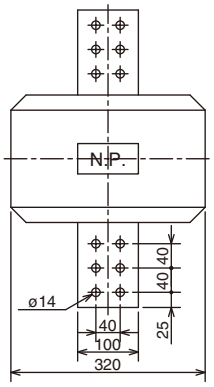

Primary current	Thickness of conductor T	No. of primary conductors
1500A	10	1
2000A, 2000-1000A	15	1
3000A, 3000-1500A	10	3
4000A, 4000-2000A	15	3

Standard	Terminal symbol				
	Primary	Secondary			Terminal
		Single ratio	Double ratio	Double core	
IEC BS	P1, P2	S1, S2	S1–S2–S3	1S1–1S2, 2S1-2S2	—
ANSI	H1, H2	X1, X2	X1–X2–X3	X1–X2, Y1-Y2	—
JEC	K, L	k, ℓ	k1–k2–ℓ	1k–1ℓ, 2k–2ℓ	g, h

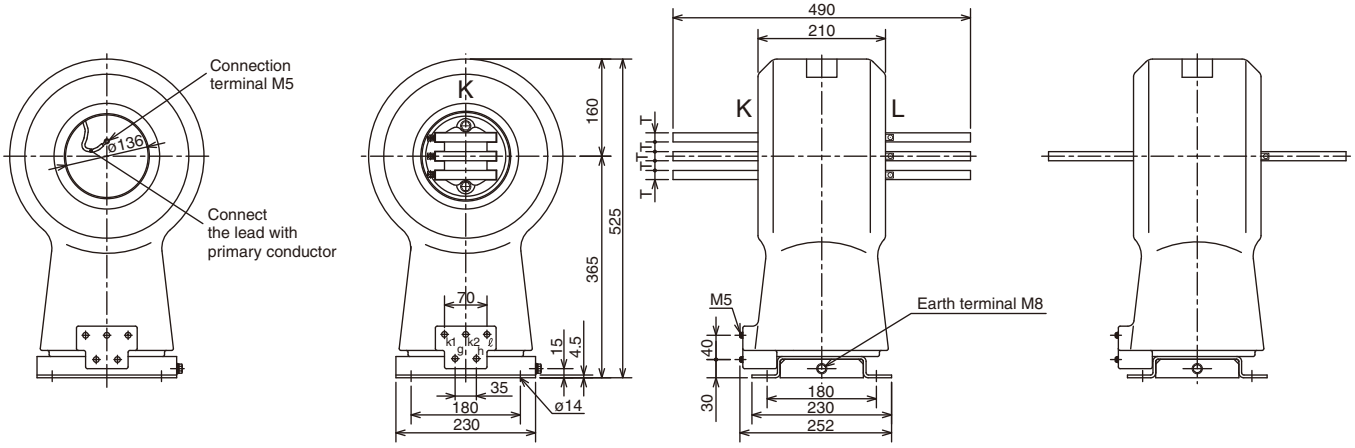

CE5-10, CE5-20

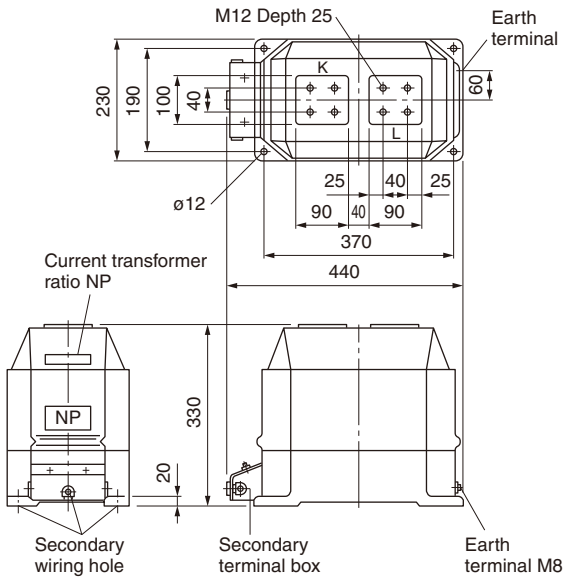

CE4-30

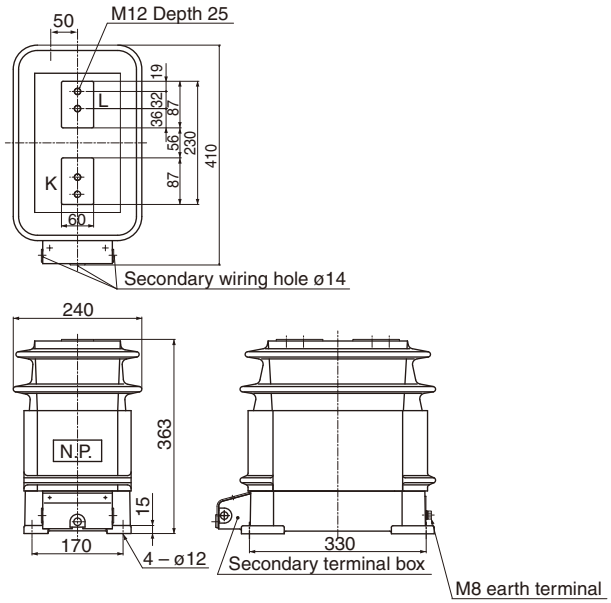

Instrument transformers

■ Dimensions, mm/CT

CE6-10
CE6-20

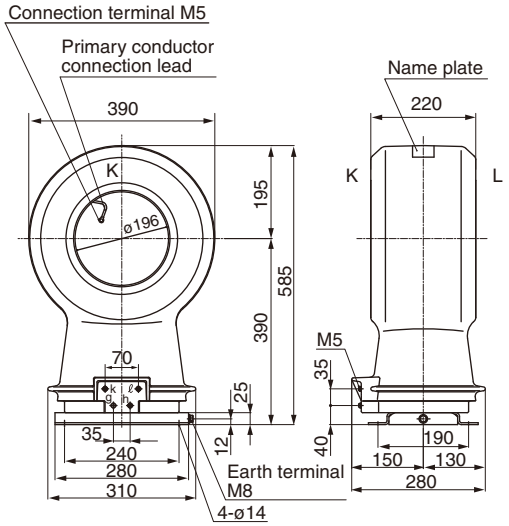

■ Dimensions, mm/VT (with fuse links)

NPE12-3FA
NPE12-6FA

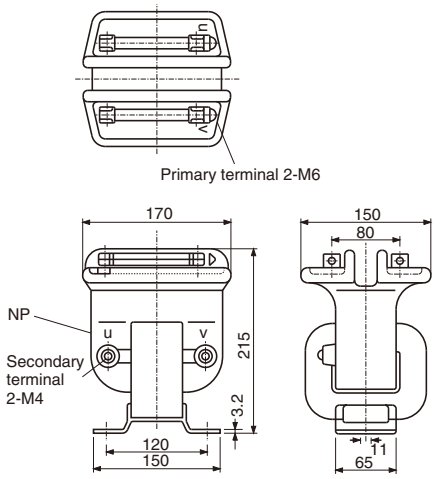

PEC2-3FA
PEC2-6FA

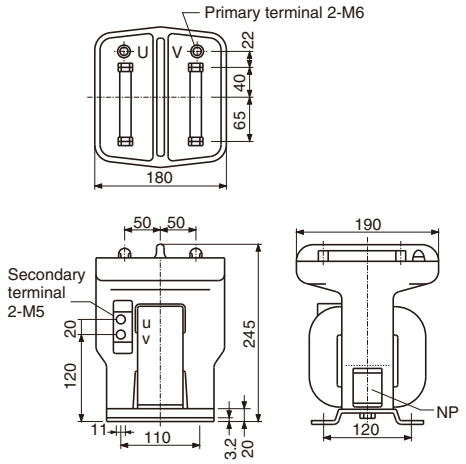

PE11-10

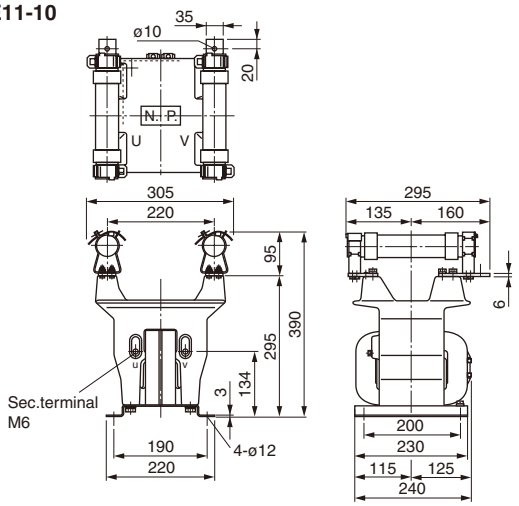

PE10-10
PE10-15

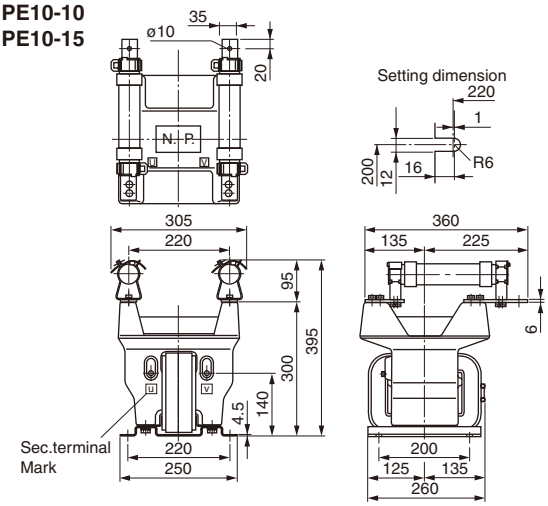

PE12-20

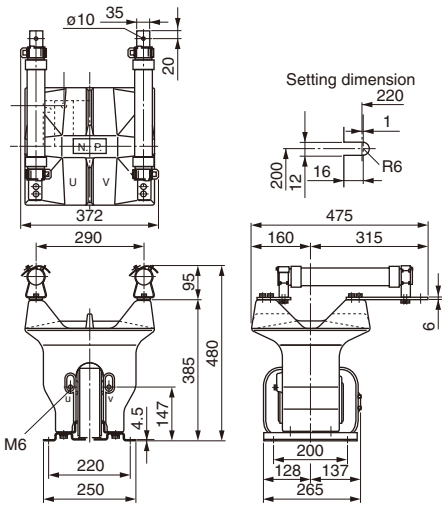

PE4-30

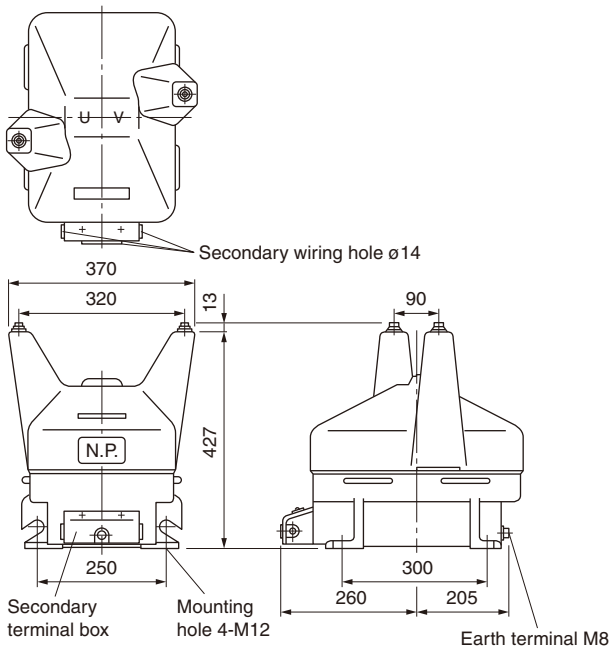

Instrument transformers
ZCT, EVT and special purpose CT

■ Description

FUJI can supply special purpose CTs, ZCTs (Zero-phase current transformers) and EVTs (Earthing voltage transformers) as well as standard FUJI instrument transformers. Some of the versions are described below.

CED and ZCED

The CED and ZCED are split-construction types.They can be mounted in position without disconnecting the cables.
CED: Epoxy-molded split-toroidal type CT
ZCED: Epoxy-molded split-toroidal type ZCT

ZCE

ZCE type is toroidal-type ZCTs and molded in epoxy resin.

GVE and GPE

GVE and GPE series are 3-phase earthing voltage transformers.
GVE: Epoxy-molded type (3.3kV, 6.6kV)
GPE: Epoxy-molded type (11 to 33kV)

Note: All types are for indoor use only.

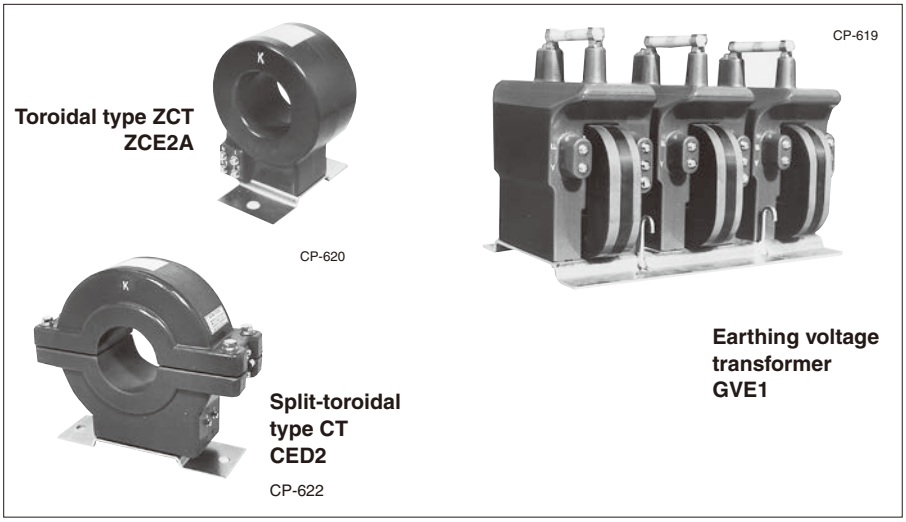

■ Type number nomenclature

• Toroidal type ZCT

ZCE □ A/ □

Basic type
ZCE: Epoxy molded toroidal type
ZCED: Epoxy molded split-toroidal type

Hole diameter, mm
1: 65
2: 80 (ZCE type) 90 (ZCED type)
3: 100
4: 125 (ZCE type) 130 (ZCED type)
5: 190 (ZCE type) 150 (ZCED type)

Rated primary current (Amps.): 200 to 1500

• Earthing voltage transformer EVT

GPE □ - □ F - □

Basic type
GVE, GPE: Epoxy-molded type

Secondary rated burden

GVE	GPE:
1: 3 x 100VA	21: 3 x 200VA
2: 3 x 200VA	13: 3 x 200VA
	12: 3 x 200VA
	9: 3 x 200VA
	8: 3 x 200VA
	7: 3 x 200VA(400A)

Rated primary voltage

3: 3.3kV	10: 11kV	20: 22kV
6: 6.6kV	15: 13.2kV	30: 33kV

Rated secondary voltage

( ) Available on request

• Split-toroidal type CT

CED □ / □

Basic type
Hole diameter, mm
1: 65
2: 90
3, 3A, 3B: 100
4: 130
Rated primary current (Amps)
200 to 3000

■ Toroidal type ZCT

Description	Hole diameter (mm)	Primary current (A)	Rated zero-phase current (mA) burden Primary	Secondary	Rated constant (Ω)	Overcurrent (n_0)	Type
Indoor use Epoxy molded toroidal type	65 80 100 125 190	0–200 0–400 0–750 0–1200 0–3000	200	1.5	10	n_0 > 2000	**ZCE1A/200** **ZCE2A/400** **ZCE3A/750** **ZCE4A/1200** **ZCE5A/3000**
Indoor use Epoxy molded split-toroidal type	65 90 100 130 150	0–200 0–400 0–600 0–750 0–1500	200	1.5	10	n_0 > 2000	**ZCED1/200** **ZCED2/400** **ZCED3/600** **ZCED4/750** **ZCED5/1500**

■ Split-toroidal type CT

Hole diameter (mm)	Primary current (A) Single ratio	Primary current (A) Double ratio	Secondary current (A)	Rated burden (VA)	Overcurrent constant (n)	Type
65	200	–	5	15	n > 10	**CED1/200**
	300	–		15		**CED1/300**
	400	–		25		**CED1/400**
	500	–		25		**CED1/500**
	600	–		40		**CED1/600**
	750	–		40		**CED1/750**
90	200	–	5	15	n > 10	**CED2/200**
	300	–		25		**CED2/300**
	400	–		40		**CED2/400**
	500	–		40		**CED2/500**
	600	–		40		**CED2/600**
	750	–		40		**CED2/750**
	1000	–	5	40	n > 20	**CED2/1000**
	1200	–		40		**CED2/1200**
	1500	–		40		**CED2/1500**
100	300	–	5	25	n > 10	**CED3/300**
	400	–		40		**CED3/400**
	500	–		40		**CED3/500**
	600	–		40		**CED3/600**
	750	–	5	40	n > 20	**CED3/750**
	1000	–		40		**CED3/1000**
	1200	–		40		**CED3/1200**
	1500	–		40		**CED3/1500**
	2000	–		40		**CED3/2000**
	3000	–		40		**CED3/3000**
	300	300–150	5	25	n > 20	**CED3A/300**
	400	400–200		40		**CED3A/400**
	500	–		40		**CED3A/500**
	600	600–300		40		**CED3A/600**
	300	300–150	5	40	n > 20	**CED3B/300**
130	400	400–200	5	40	n >10	**CED4/400**
	500	–		40		**CED4/500**
	600	600–300		40		**CED4/600**
	750	–	5	40	n > 20	**CED4/750**
	–	800–400		40		**CED4/800**
	1000	1000–500		40		**CED4/1000**
	1200	1200–600		40		**CED4/1200**
	1500	1500–750		40		**CED4/1500**
	2000	2000–1000		40		**CED4/2000**
	3000	3000–1500		40		**CED4/3000**

■ Earthing voltage transformer EVT

Rated voltage (V)			Rated burden (VA)		Dielectric strength (kV, 1minute)		Impulse*1 (kV)	Type	Fuse
Primary	Secondary	Tertiary	Secondary	Tertiary	Primary	Secondary			
3300	110	110/3	3 × 100	3 × 500	2	2	45	**GVE1-3FA-110/5G**	PTFA-6*2
			3 × 200	3 × 500	2	2	45	**GVE2-3FA-110/5G**	
6600	110	110/3	3 × 100	3 × 500	2	2	60	**GVE1-6FA-110/5G**	
			3 × 200	3 × 500	2	2	60	**GVE2-6FA-110/5G**	
11000	110	110/3	3 × 200	3 × 200	2	2	90	**GPE9-10**	JR-10/5*3
			3 × 200	3 × 200	2	2	75	**GPE8-10**	JR-10/5*3
			3 × 200	3 × 200	2	2	90	**GPE7-10**	JR-10/5*3
13200	110	110/3	3 × 200	3 × 200	2	2	95	**GPE7-15**	JR-10N/5*3
22000	110	110/3	3 × 200	3 × 200	2	2	125	**GPE12-20**	JR-20/5*3
22000	110	110/3	3 × 200	3 × 200	2	2	150	**GPE13-20**	JR-20/5*3
33000	110	110/3	3 × 200	3 × 200	2	2	170	**GPE21-30**	–

Note: *1: 1.2 × 50μs *2: Provided *3: Optional

■ Dimensions, mm

• Toroidal-type ZCT

ZCE1A, 2A, 3A,4A

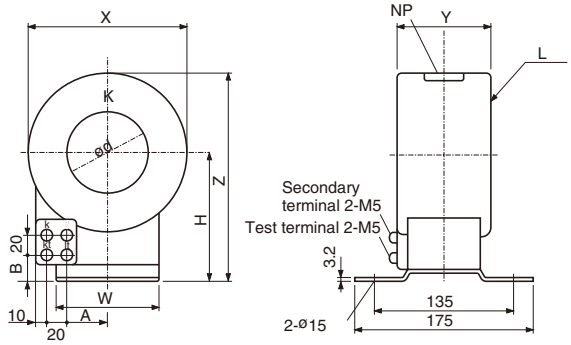

Type	d	X	Y	Z	H	W	A	B	Mass (kg)
ZCE1A/200	65	140	75	180	110	90	40	25	4.0
ZCE2A/400	80	160	90	210	130	90	40	25	5.6
ZCE3A/750	100	185	105	248	155	120	60	35	8.4
ZCE4A/1200	125	214	120	287	180	120	60	35	12.0

Dimensions for reference only. Please confirm before construction begins.

ZCE5A/3000

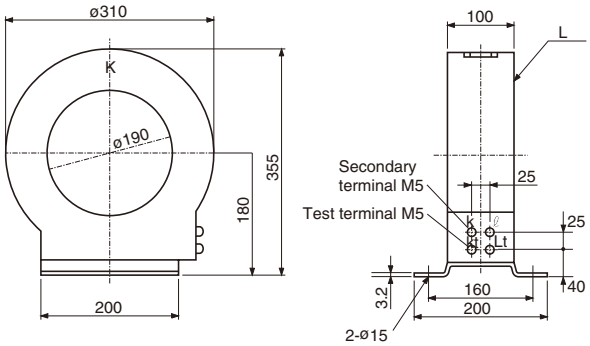

Mass: 14kg

■ Dimensions, mm

• Split-toroidal type CT/ZCED

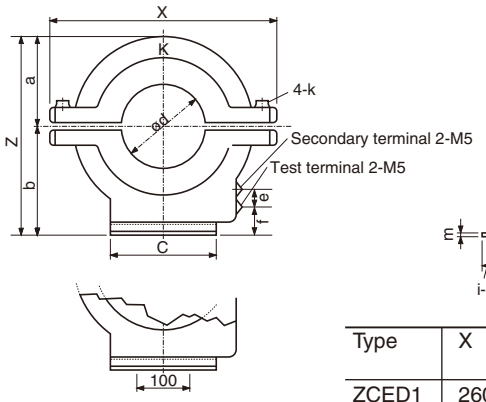

ZCED4,5 Mounting hole

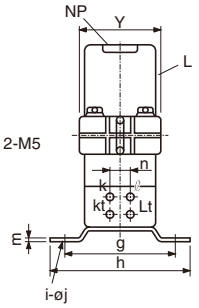

Type	X	Y	Z	a	b	c	d	e	f	g	h	i	j	k	m	n	Mass (kg)
ZCED1	260	95	225	100	125	130	65	27	30	135	175	2	14	M10	3.2	27	15
ZCED2	310	110	270	120	150	150	90	27	40	135	175	2	14	M10	4.5	27	20
ZCED3	340	110	295	130	165	150	100	30	40	135	175	2	14	M10	4.5	27	25
ZCED4	380	140	350	155	195	200	130	30	55	200	250	4	18	M10	6	30	30
ZCED5	460	150	405	185	220	200	150	30	55	200	250	4	18	M12	6	30	52

Dimensions for reference only. Please confirm before construction begins.

• Split-toroidal type CT/CED

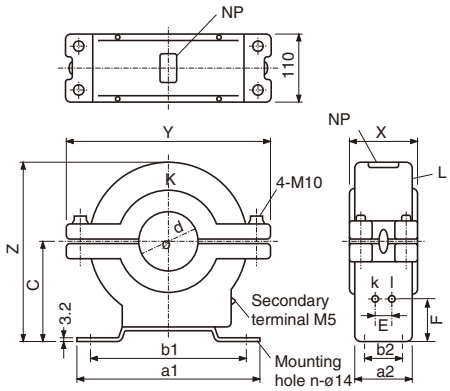

Type	X	Y	Z	d	a1	a2	b1	b2	c	E	F	n
CED1	95	260	225	65	260	80	220	—	125	27	57	2
CED2	110	310	285	90	300	90	260	—	165	27	82	2
CED3	110	340	295	100	300	95	260	—	165	27	67	2
CED3A	200	340	295	100	300	190	260	120	165	50	65	4
CED3B	250	340	295	100	300	240	260	120	165	50	65	4
CED4	125	350	305	130	300	110	260	70	165	50	50	4

Dimensions for reference only. Please confirm before construction begins.

• Earth voltage transformer VT/GVE1, GVE2

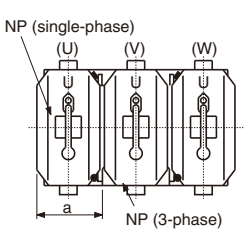

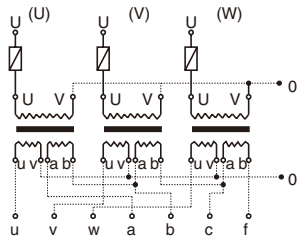

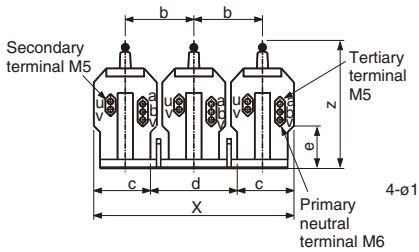

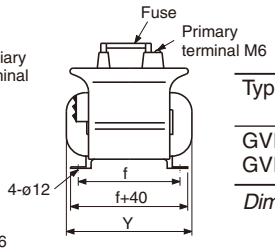

Type	X	Y	Z	a	b	c	d	e	f	Mass (kg)
GVE1	428	265	284	136	146	104	220	90	220	59
GVE2	476	305	300	152	162	128	220	100	220	82

Dimensions for reference only. Please confirm before construction begins.

■ Dimensions, mm

• Earthing voltage transformer VT (with fuse links)

GPE9-10

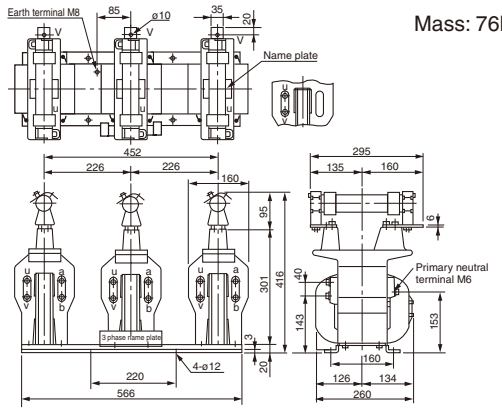

Mass: 76kg

GPE12-20

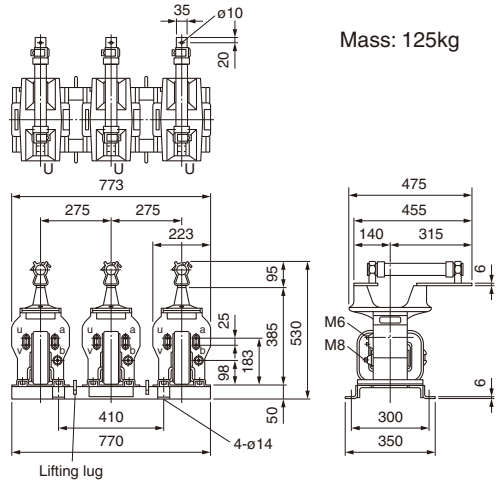

Mass: 125kg

GPE8-10

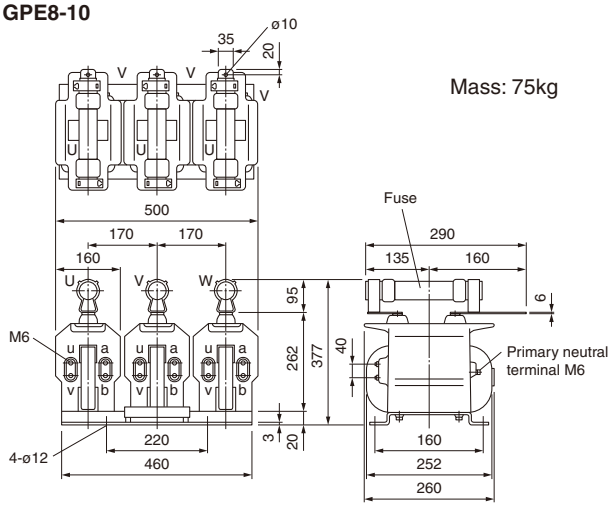

Mass: 75kg

GPE13-20

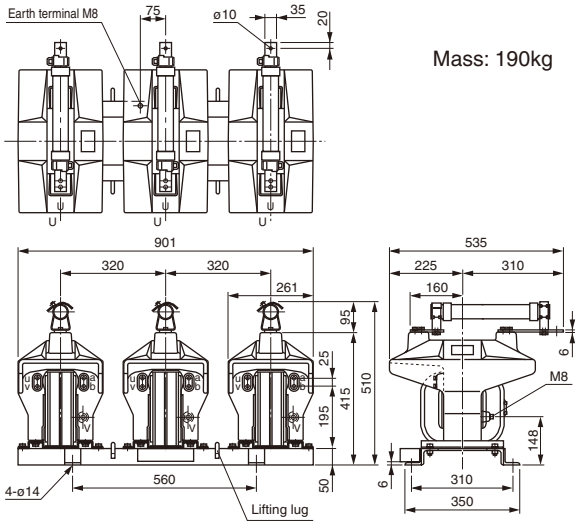

Mass: 190kg

GPE7-10, GPE7-15

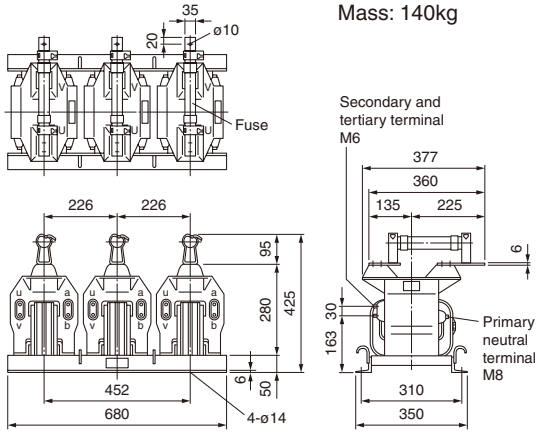

Mass: 140kg

GPE21-30

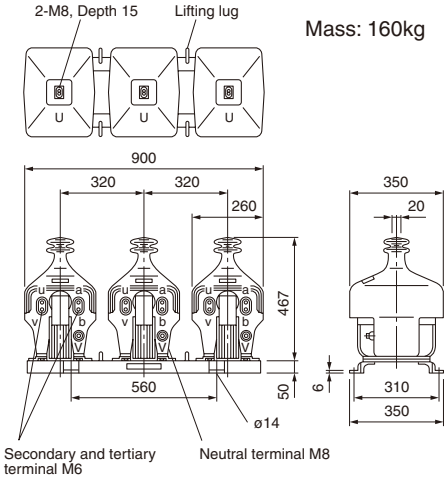

Mass: 160kg

M.V. Vacuum circuit breakers
Vacuum magnetic contactors
Protective relays

Page

Vacuum Circuit Breakers

General information E2-1
Advantages E2-2
HS series
- General information E2-4
- Specifications E2-5
- Types and ratings E2-10
- Installation and accessories E2-12
- Dimensions E2-13
- Wiring diagrams E2-22
- Application guide E2-23

AUTO.V/New-AUTO.V
- AUTO.V
  - Specifications E2-24
  - Design features E2-25
  - Types and ratings E2-26
- New-AUTO.V
  - Specifications E2-27
  - Types and ratings E2-30
- Type number nomenclature E2-31
- Installation and accessories E2-32
- Dimensions E2-35
- Wiring diagrams E2-44

MULTI.VCB
- Specifications E2-50
- Type number nomenclature E2-51
- Types and ratings E2-52
- Installation and accessories E2-53
- Dimensions E2-55
- Wiring diagrams E2-63

Vacuum Magnetic Contactors

HN series E2-65

Protective Relays

QHA series
- General information E2-74
- Dimensions E2-78
- Wiring diagrams E2-79

MINIMUM ORDERS

Orders amounting to **less than ¥10,000** net per order will be charged as ¥10,000 net per order plus freight and other charges.

WEIGHTS AND DIMENSIONS

Weights and dimensions appearing in this catalog are the best information available at the time of going to press. FUJI ELECTRIC FA has a policy of continuous product improvement, and design changes may make this information out of date.
Please confirm such details before planning actual construction.

INFORMATION IN THIS CATALOG IS SUBJECT TO CHANGE WITHOUT NOTICE.

■ FUJI vacuum circuit breakers

Vacuum circuit breakers are compact circuit breakers designed for safe operation, high reliability and easy maintenance, and are widely used for various types of high voltage circuits. FUJI V-circuit breakers (VCB) have been developed through the use of our many years of successful experience and advanced technology. They are compact and light-weight, and are available in a number of current ratings.

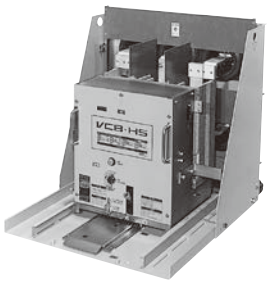

HS series

KKD14-102

AUTO.V

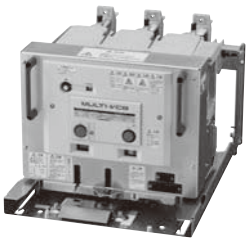

KKD17-044

MULTI.VCB

● HS series

These types are available in all ratings from 3.6 to 36kV, and can be applied to a variety of H.V. switchgear. The motor-spring stored-energy types feature auto-reclosing. The HS types are comparatively high in breaking current with ratings of over 7.2kV, 20kA.

- Breaking currents: 12.5kA to 50kA
- Rated voltage: 3.6kV to 36kV
- Standards: JEC, IEC

See page E2-4.

● AUTO.V

AUTO.Vs are provided with a built-in electronic overcurrent relay and toroidal-type CT.
They require little space for installation and also facilitate the system wide protective coordination.
The inverse-time operating and instantaneous trip currents can be set by means of the dial.

- Breaking currents: 8kA, 12.5kA
- Rated voltage: 3.6/7.2kV
- Standards: JIS C4603

See page E2-24.

● MULTI.VCB

The MULTI.VCBs are general purpose VCBs which are small in size and simple in construction thus allowing them to be applied to many types of switchgear.

- Breaking currents: 8kA, 12.5kA
- Rated voltage: 3.6/7.2kV
- Standards: JIS C4603

See page E2-50.

■ Quick selection table

Breaking current (kA)	Rated current JIS, JEC (A)	Rated voltage (kV)	Closing system	Type □ : Installation
20	600	3.6/7.2	Motor-spring	**HS2006□-06Mf-E**
	1200			**HS2006□-12Mf-E**
	2000			**HS2006□-20Mf-E**
25	600	3.6/7.2		**HS2506□-06Mf-E**
	1200			**HS2506□-12Mf-E**
	2000			**HS2506□-20Mf-E**
31.5	1200	3.6/7.2		**HS3106□-12Mf-E**
	2000			**HS3106□-20Mf-E**
40	1200	3.6/7.2		**HS4006□-12Mf-E**
	2000			**HS4006□-20Mf-E**
	4000			**HS4006□-40Mf-N**
50	1200	3.6/7.2		**HS5006□-12Mf-NA**
	2000			**HS5006□-20Mf-NA**
	3000			**HS5006□-30Mf-N**
12.5	600	12		**HS1210□-06Mf-E**
	1200			**HS1210□-12Mf-E**
	2000			**HS1210□-20Mf-E**
16	600	12		**HS1610□-06Mf-E**
	1200			**HS1610□-12Mf-E**
	2000			**HS1610□-20Mf-E**
20	600	12		**HS2010□-06Mf-E**
	1200			**HS2010□-12Mf-E**
	2000			**HS2010□-20Mf-E**
25	600	12		**HS2510□-06Mf-E**
	1200			**HS2510□-12Mf-E**
	2000			**HS2510□-20Mf-E**
31.5	1200	12		**HS3110□-12Mf-E**
	2000			**HS3110□-20Mf-E**
	3000			**HS3110□-30Mf-N**

Note: □ Installation : *See pages E2-4 for HS series, E2-24 for AUTO.V and E2-50 for MULTI.VCB.*

Breaking current (kA)	Rated current JIS, JEC (A)	Rated voltage (kV)	Closing system	Type □ : Installation
40	1200	12	Motor-spring	**HS4010□-12Mf-NA**
	2000			**HS4010□-20Mf-NA**
	3000			**HS4010□-30Mf-N**
	4000			**HS4010□-40Mf-N**
50	1200	12		**HS5010□-12Mf-NA**
	2000			**HS5010□-20Mf-NA**
	3000			**HS5010□-30Mf-N**
12.5	600	24		**HS1220□-06Mf-K**
16	600	24		**HS1620□-06Mf-E**
	1200			**HS1620□-12Mf-E**
25	1200	24		**HS2520□-12Mf-E**
	2000			**HS2520□-20Mf-E**
40	1200	24		**HS4020□-12Mf-N**
	2000			**HS4020□-20Mf-N**
	3000			**HS4020□-30Mf-N**
25	600	36		**HS2530□-06Mf-N**
	1200			**HS2530□-12Mf-N**
	2000			**HS2530□-20Mf-N**
8.0	400	3.6/7.2	Manual-spring Fixed	**HA08A□-H□**
12.5	600			**HA12A□-H□**
8.0	400	3.6/7.2	Motor-spring Fixed	**HA08A□-A□**
12.5	600			**HA12A□-A□**
8.0	400	3.6/7.2	Motor-spring Draw-out	**HA08A□-A8**
12.5	600			**HA12A□-A8**
8.0	400	3.6/7.2	Motor-spring Draw-out	**HA08D□-A□**
12.5	600			**HA12D□-A□**

Vacuum circuit breakers
Advantages

■ Description

3.6kV to 36kV, 600 to 4000A, 12.5 to 50kA

The revolutionary arc extinguishing system

● Rotary

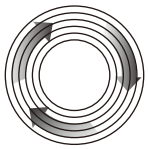

FUJI VCBs have employed a unique design principle in which the contacts are provided with a succession of slits having toroidal-type CrCu contacts mounted on them.
The arc is driven round the circular contact surface as it is being extinguished. Since the arc is not localized at one point there is no fear of overheating.
This results in much improved inter-electrode dielectric strength so ensuring excellent breaking capability. More-over, uneven contact wear is minimized.

● Getter

FUJI vacuum interrupters make use of the gettering effect. The toroidal-type contacts are made of a special chromium-copper (CrCu) alloy specially developed by FUJI so as to ensure a large “getter” quality.
The metallic gases thus produced at interruption and left in the vacuum are quickly absorbed by the getter. The gases are neutralized so maintaining the high degree of vacuum.
The interrupters require a minimum of attention over their long service life.

● Surge

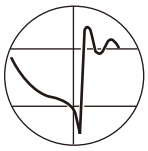

Switching surges can be generated at small current breaking due to the VCB inherent chopping current. FUJI has paid much attention to this problem, and after much effort on design and materials research it has been possible to reduce the chopping current to 3.5 Amps. This very small chopping current means that the corresponding surge voltage will be reduced and cost efficient surge protection can be carried out for motors, transformers and other load equipment.

The revolutionary arc extinguishing system

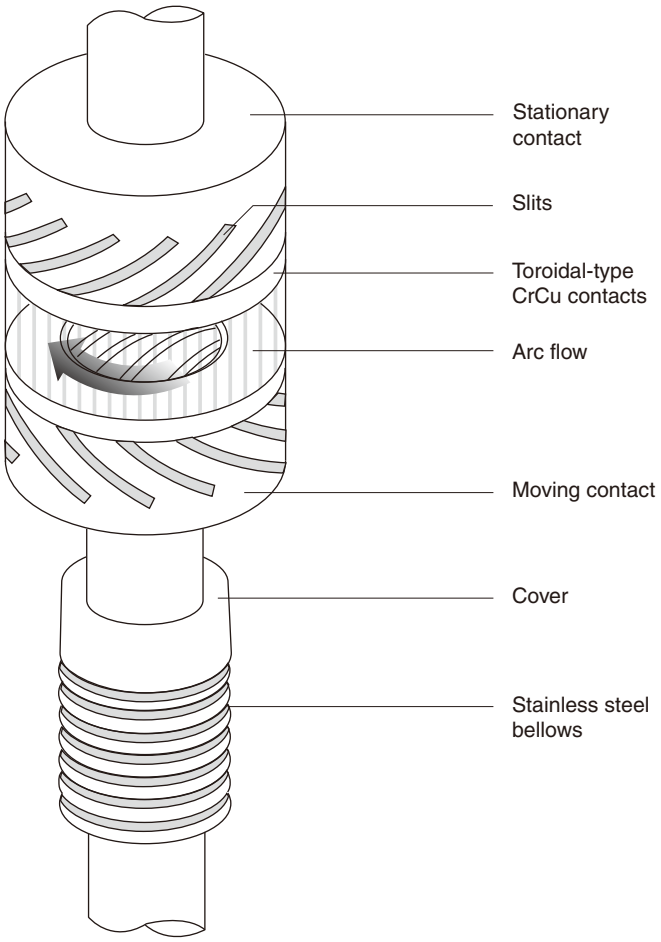

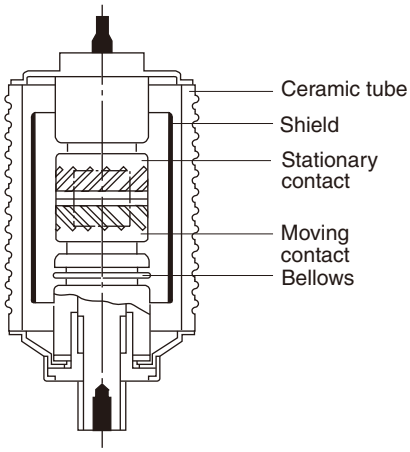

■ Progress of arc extinction

Arcs generated by VCBs have inherent characteristics that change when approximately 10kA is reached. Less than 10kA a dispersed arc occurs, over this value the arc is concentrated. The photos were taken consecutively and illustrate an interruption in the 25kA range (concentrated arc). About 4 1/2 rotations occurred (10ms at 50Hz). This time is typical, but varies according to breaking current and arcing times.

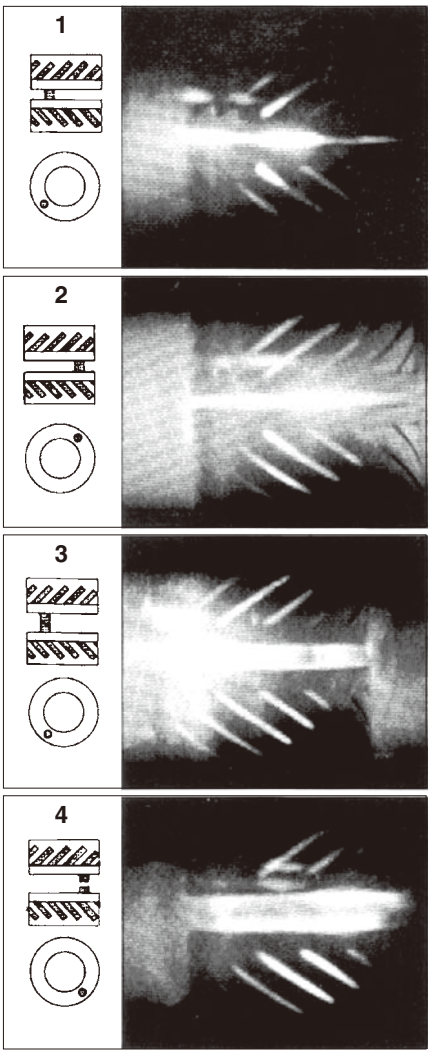

Explanation

1. The contacts begin to open and the arc moves from the center to the left hand side.
2. 3. The arc is driven round the toroidal-type contact surface.
4. The contacts are in the full open position just before interruption is completed.

■ Definitions

● What is the action of the "getter"?

Sometimes called a "degasser" the "getter" uses a special material such as zirconium alloy that has the property of absorbing metallic gases in a vacuum. This allows the high degree of vacuum to be maintained.

● Switching surges and VCBs?

Switching surges can be generated when breaking currents within several hundreds range.
VCB inherent switching surges are generated under certain specific conditions which mainly comprise current chopping surges and multiple current reignition surges. No problem is posed by switching surges when breaking current exceeds several hundred amperes.

Surge voltages

The value of the surge voltage due to switching surges varies according to the ↗ load circuit conditions.
This can be expressed in the following simple formula:
Surge voltage = Surge impedance 5 Chopping current
Therefore, it is necessary to keep the chopping current low in order to reduce the surge voltage to the minimum. The peak transient voltage is obtained by adding to the above calculation the voltage on the load side at the time of current chopping.

Chopping surge

The chopping surge occurs when a low current is interrupted, the arc is unstable before current becomes zero and the current is forcedly chopped. At this time a surge is generated by the energy remaining in the load inductance.
Example:
When the no-load interruption of a transformer is carried out the exciting current only is interrupted.

Chopping surge

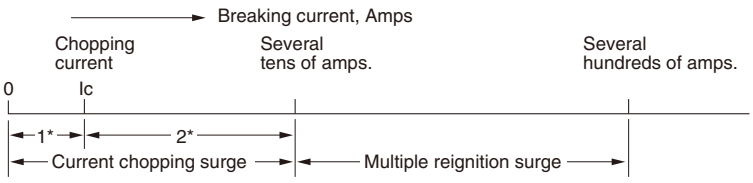

1* Chopping surge suppresed by reignition
2* Chopping surge not accompanied with reignition

Multiple reignition surge

The multiple reignition surges can occur when breaking currents range from tens to hundreds of amperes. Although no problem is normally posed even when breaking these currents, a high surge voltage can be generated when breaking an inrush current on starting the motors.

Switching surge

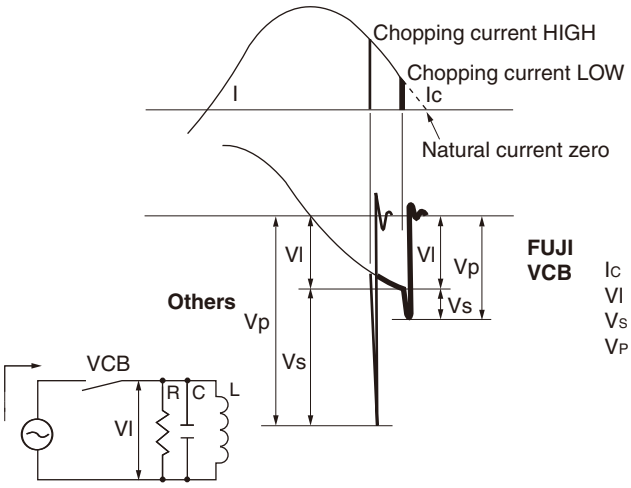

Ic : Chopping current
Vl : Voltage at load side
Vs : Surge transient voltage
Vp : Peak transient voltage
Vp= Vl + Vs
Vs= Surge impedance x Ic
Surge impedance:

$$Z=\sqrt{\frac{L}{C}}$$

E2

Vacuum circuit breakers
HS series/General information

■ Description

HS type 3.6kV to 36kV up to 63kA. FUJI HS series vacuum circuit breakers are designed to meet the many special needs of industry. The vacuum interrupter system employed reflects the latest technology. The circuit breaker has a very stable and constant breaking performance over a wide range of currents up to the rated short circuit current value.
The motor spring type (M) closing system can perform high speed reclosing.
The contacts are made of a special alloy and require no maintenance over their long life time.
The interrupter is provided with a contact-wear indicator which gives notice when replacement is required. The open and close positioning indicator, operating counter, pushbutton for manual interruption and manual closing device are conveniently installed on the control section of the dead-front operating panel, and are isolated from the high-voltage breaking section for safety reasons and to facilitate operation and inspection. FUJI VCBs comprise the fixed mounted (P) type and cradle (X and Y) types. Since the cradle version is provided with a draw-out system switchgear assembly is easily carried out.

■ Ordering information

Specify the following:
1. Type number
2. Rated voltage, current and frequency
3. Rated breaking capacity
4. Installation system
5. Operating voltage and frequency (M) of closing system
6. Voltage and current of tripping system
7. Optional accessories, if required

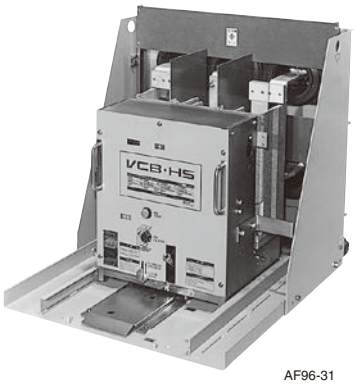

AF96-31

Series of FUJI VCB

Breaking current	Rated voltage					
	3.6kV	7.2kV	12kV	15kV	24kV	36kV
12.5kA	–		HS1210: 600A, 1200A, 2000A	–	HS1220: 600A	–
16kA	–		HS1610: 600A, 1200A, 2000A	HS:1615 600A, 1200A, 2000A	HS1620: 600A, 1200A	–
20kA	HS2006: 600A, 1200A, 2000A		HS2010: 1200A, 2000A	HS2015: 600A, 1200A, 2000A	–	–
25kA	HS2506: 600A, 1200A, 2000A		HS2510: 600A, 1200A, 2000A	HS2515: 600A, 1200A, 2000A	HS2520: 1200A, 2000A	HS2530: 600A, 1200A, 2000A
31.5kA	HS3106: 1200A, 2000A		HS3110: 1200A, 2000A, 3000A	HS3115: 600A, 1200A, 2000A	–	–
40kA	HS4006: 1200A, 2000A, 4000A		HS4010: 1200A, 2000A, 3000A	HS4015: 600A, 1200A, 2000A	HS4020: 1200A, 2000A, 3000A	–
50kA	HS5006: 1200A, 2000A, 3000A		HS5010: 1200A, 2000A, 3000A	–	–	–
63kA	HS6306: 1200A, 2000A		–	–	–	–

■ Type number nomenclature

HS 20 06 M- 06 M f

Basic type
HS: 7.2kV 12.5kA and over

Rated breaking current
12: 12.5kA 31: 31.5kA
16: 16kA 40: 40kA
20: 20kA 50: 50kA
25: 25kA 63: 63kA

Rated voltage
06: 3.6/7.2kV 20: 24kV
10: 12kV 30: 36kV

Installation
P : Fixed type
X : Draw-out type with cradle for JEM1425 Class CW
U : Draw-out type with cradle for JEM1425 Class CW
Y : Draw-out type with cradle and shutter for JEM1425 MW, PW
M: Draw-out type for HS2530

Tripping system
f : Shunt trip
Specify the frequency and voltage (AC or DC)

Closing system
M: Motor-spring stored energy (High speed reclosing)
Specify the frequency and voltage (AC or DC)

Rated current
06: 600, 630A 20: 2000A
12: 1200, 1250A 30: 3000A
40: 4000A

■ Specifications

Type			HS2006□ - ■Mf-E		HS2506□ - ■Mf-E		HS3106 □ - ■Mf-E	
Rated voltage [kV]			3.6	7.2	3.6	7.2	3.6	7.2
Rated current [A] ■ : 06, 12, 20, 30		JEC	600, 1200 2000		600, 1200 2000		1200, 2000	
		IEC	630, 1250 2000		630, 1250 2000		1250, 2000	
Rated breaking capacity		[kA]	20		25		31.5	
		[MVA] Ref. value	125	250	160	310	200	390
Rated short-circuit making current [kA]			50		63		80	
Rated short-time withstand current [kA]	JEC: 2 sec. IEC: 1 sec. *1		20 20		25 25		31.5 31.5	
Rated breaking time [cycle]			3		3		3	
Rated withstand voltage	Power frequency (1 min.)	JEC [kV] IEC [kV]	22 20		22 20		22 20	
	Impulse (1.2×50μs) [kV]		60		60		60	
Closing time at no load [sec]			0.04		0.04		0.04	
Rated operating sequence		JEC IEC	O-1min-CO-3min-CO, O-3min-CO-3min-CO,		CO-15s-CO or O-0.35s-CO-1min-CO CO-15s-CO or O-0.3s-CO-3min-CO			
Opening time [sec.]		JEC	0.03		0.03		0.03	
		IEC	0.03		0.03		0.03	
Closing system			Motor-spring stored energy (High speed reclosing) (M)					
Operating voltage and current for closing			100V AC/DC, 1.7A*3 200V AC/DC, 1A		100V AC/DC, 2A 200V AC/DC, 1A		100V AC/DC, 2.5A 200V AC/DC, 1.7A	
Control voltage and current for closing			100V AC/DC, 4A 200V AC/DC, 2A		100V AC/DC, 4A 200V AC/DC, 2A		100V AC/DC, 5A 200V AC/DC, 2.5A	
Tripping system*2			Shunt trip (f)					
Operating voltage and current for tripping			100V DC, 4A 200V DC, 2A				100V DC, 4A 200V DC, 2A	
Auxiliary contact			4NO+4NC, Rating 100/200V AC: 20/10A, 100/200V DC: 5/3A					
Durability	Mechanical [operations] Electrical [operations]		10000 10000					
Installation □			P, Y X, U (600, 1200A only)		P, Y X, U (600, 1200A only)		P, Y, X	
Mass (draw-out type without cradle)[kg]			62 (X, U, Y: 600A) 66 (Y: 1200A) 117 (Y: 2000A)		66 (X, U, Y: 600A) 70 (Y: 1200A) 117 (Y: 2000A)		122 (X, Y: 1200A) 130 (X, Y: 2000A)	

Notes: *1 Contact FUJI for the information concerning the 3 sec. rating of IEC.
*2 If capacitor tripping system is required, connect a capacitor trip device VCB-T1A or VCB-T2A (optional accessory) to AC power supply.
*3 2A for 2000A rating.

Vacuum circuit breakers
HS series

■ Specifications

Type			HS4006□ - ■Mf-E		HS4006□ -40Mf-N		HS5006□ - ■Mf-NA		HS5006□ -30Mf-N		HS6306□ - ■Mf-NB	
Rated voltage [kV]			3.6	7.2	3.6	7.2	3.6	7.2	3.6	7.2	3.6	7.2
Rated current [A] ■ : 12, 20, 30		JEC	1200, 2000		4000		1200, 2000		3000		1200, 2000	
		IEC	1250, 2000		4000		1250, 2000		3000		1250, 2000	
Rated breaking capacity		[kA]	40		40		50		50		63	
		[MVA] Ref. value	250	500	250	500	310	620	310	620	390	780
Rated short-circuit making current [kA]			100		100		125		125		160	
Rated short-time withstand current [kA]	JEC: 2 sec. IEC: 1 sec. *1		40 40		40 40		50 50		50 50		63 63	
Rated breaking time [cycle]			5		5		5		5		5	
Rated withstand voltage	Power frequency (1 min.)	JEC [kV] IEC [kV]	22 20		22 20		22 20		22 20		22 20	
	Impulse (1.2×50μs) [kV]		60		60		60		60		60	
Closing time at no load [sec]			0.04		0.1		0.1		0.1		0.1	
Rated operating sequence		JEC IEC	O-1min-CO-3min-CO, CO-15s-CO or O-0.35s-CO-1min-CO O-3min-CO-3min-CO, CO-15s-CO or O-0.3s-CO-3min-CO									
Opening time [sec.]		JEC	0.03		0.07		0.07		0.07		0.07	
		IEC	0.04		0.07		0.07		0.07		0.07	
Closing system			Motor-spring stored energy (High speed reclosing) (M)									
Operating voltage and current for closing			100V AC/DC, 2.5A 200V AC/DC, 1.7A		100V AC/DC, 6A 200V AC/DC, 3A		100V AC/DC, 6A 200V AC/DC, 3A		100V AC/DC, 6A 200V AC/DC, 3A		100V AC/DC, 6A 200V AC/DC, 3A	
Control voltage and current for closing			100V AC/DC, 5A 200V AC/DC, 2.5A		100V AC/DC, 4A 200V AC/DC, 2A		100V AC/DC, 4A 200V AC/DC, 2A		100V AC/DC, 4A 200V AC/DC, 2A		100V AC/DC, 4A 200V AC/DC, 2A	
Tripping system *2			Shunt trip (f)									
Operating voltage and current for tripping			100V DC, 4A: JEC 3A: IEC 200V DC, 2A: JEC 1.5A: IEC		100V DC, 4A 200V DC, 2A							
Auxiliary contact			4NO+4NC, Rating 100/200V AC: 20/10A, 100/200V DC: 5/3A									
Durability	Mechanical [operations] Electrical [operations]		10000 10000									
Installation □			P, Y X (1200, 2000A only)		P, X, Y		P, Y		P, Y		Y	
Mass (draw-out type without cradle) [kg]			122 (X, Y: 1200A) 130 (X, Y: 2000A)		400		240		320		350	

Notes: *1 Contact FUJI for the information concerning the 3 sec. rating of IEC.
*2 If capacitor tripping system is required, connect a capacitor trip device VCB-T1A or VCB-T2A (optional accessory) to AC power supply.

■ Specifications

Type			HS1210□ - ■Mf-E	HS1610□ - ■Mf-E	HS2010□ - ■Mf-E	HS2510□ - ■Mf-E	HS3110□ - ■Mf-E
Rated voltage [kV]			12	12	12	12	12
Rated current [A] ■ : 06, 12, 20		JEC	600, 1200 2000	600, 1200 2000	600, 1200 2000	600, 1200 2000	1200, 2000
		IEC	630, 1250 2000	630, 1250 2000	630, 1250 2000	630, 1250 2000	1250, 2000
Rated breaking capacity		[kA]	12.5	16	20	25	31.5
		[MVA] Ref. value	260	330	415	520	650
Rated short-circuit making current [kA]			31.5	40	50	63	80
Rated short-time withstand current [kA]	JEC: 2 sec. IEC: 1 sec. *1		12.5 12.5	16 16	20 20	25 25	31.5 31.5
Rated breaking time [cycle]			3	3	3	3	3
Rated withstand voltage	Power frequency (1 min.)	JEC [kV] IEC [kV]	28 28	28 28	28 28	28 28	28 28
	Impulse (1.2×50μs) [kV]		75	75	75	75	75
Closing time at no load [sec.]			0.04	0.04	0.04	0.04	0.04
Rated operating sequence		JEC IEC	O-1min-CO-3min-CO, CO-15s-CO or O-0.35s-CO-1min-CO O-3min-CO-3min-CO, CO-15s-CO or O-0.3s-CO-3min-CO				
Opening time [sec.]		JEC	0.03	0.03	0.03	0.03	0.03
		IEC	0.03	0.03	0.03	0.03	0.03
Closing system			Motor-spring stored energy (High speed reclosing) (M)				
Operating voltage and current for closing			100V AC/DC, 1.7A(600, 1200A), 2.5A (2000A) 200V AC/DC, 1A (600, 1200A), 1.7A (2000A)				100V AC/DC, 2.5A 200V AC/DC, 1.7A
Control voltage and current for closing			100V AC/DC, 4A (600, 1200A), 5A (2000A) 200V AC/DC, 2A (600, 1200A), 2.5A (2000A)				100V AC/DC, 5A 200V AC/DC, 2.5A
Tripping system*2			Shunt trip (f)				
Operating voltage and current for tripping			100V DC, 4A 200V DC, 2A				100V DC, 4A 200V DC, 2A
Auxiliary contact			4NO+4NC, Rating 100/200V AC: 20/10A, 100/200V DC: 5/3A				
Durability	Mechanical [operations] Electrical [operations]		10000 10000				
Installation □			P, Y X (600, 1200A only)	P, Y X (600, 1200A only)	P, Y X (600, 1200A only)	P, Y X (600, 1200A only)	P, X, Y
Mass (draw-out type, without cradle) [kg]			71 (Y: 600A) 71 (Y: 1200A) 130 (X, Y: 2000A)	71 (Y: 600A) 71 (Y: 1200A) 130 (X, Y: 2000A)	71 (Y: 600A) 71 (Y: 1200A) 130 (X, Y: 2000A)	75 (Y: 600A) 75 (Y: 1200A) 130 (X, Y: 2000A)	122 (X, Y: 1200A) 130 (X, Y: 2000A)

Notes: *1 Contact FUJI for the information concening the 3 sec. rating of IEC.
*2 If capacitor tripping system is required, connect a capacitor trip device VCB-T1A or VCB-T2A (optional accessory) to an AC power supply.

Vacuum circuit breakers
HS series

■ Specifications

Type			HS3110 -30Mf-N	HS4010 - ■Mf-NA	HS4010 - ■Mf-N	HS5010 - ■Mf-NA	HS5010 -30Mf-N
Rated voltage [kV]			12	12	12	12	12
Rated current [A] ■ : 12, 20, 30, 40		JEC	3000	1200, 2000	3000, 4000	1200, 2000	3000
		IEC	3000	1250, 2000	3000, 4000	1250, 2000	3000
Rated breaking capacity		[kA]	31.5	40	40	50	50
		[MVA] Ref. value	650	830	830	1040	1040
Rated short-circuit making current [kA]			80	100	100	125	125
Rated short-time withstand current [kA]	JEC: 2 sec. IEC: 1 sec. *1		31.5 31.5	40 40	40 40	50 50	50 50
Rated breaking time [cycle]			3	5	5	5	5
Rated withstand voltage	Power frequency (1 min.)	JEC [kV] IEC [kV]	28 28	28 28	28 28	28 28	28 28
	Impulse (1.2×50μs) [kV]		75	75	75	75	75
Closing time at no load [sec.]			0.1	0.1	0.1	0.1	0.1
Rated operating sequence		JEC IEC	O-1min-CO-3min-CO, CO-15s-CO or O-0.35s-CO-1min-CO O-3min-CO-3min-CO, CO-15s-CO or O-0.3s-CO-3min-CO				
Opening time [sec.]		JEC	0.04	0.04	0.04*3	0.07	0.07
		IEC	0.04	0.04	0.04*3	0.07	0.07
Closing system			Motor-spring stored energy (High speed reclosing) (M)				
Operating voltage and current for closing			100V AC/DC, 6A 200V AC/DC, 3A				
Control voltage and current for closing			100V AC/DC, 4A 200V AC/DC, 2A				
Tripping system*2			Shunt trip (f)				
Operating voltage and current for tripping			100V DC, 4A 200V DC, 2A				
Auxiliary contact			4NO+4NC, Rating 100/200V AC: 20/10A, 100/200V DC: 5/3A				
Durability	Mechanical [operations] Electrical [operations]		10000 10000				
Installation			P, Y	P, Y	P, Y(3000A) X(4000A)	P, Y	P, Y
Mass (draw-out type without cradle) [kg]			320	240	320 (3000A) 400 (4000A)	240	320

Notes: *1 Contact FUJI for the information concerning the 3 sec. rating of IEC.
*2 If capacitor tripping system is required, connect a capacitor trip device VCB-T1A or VCB-T2A (optional accessory) to AC power supply.
*3 0.07s for 4000A rating.

■ Specifications

Type			HS1220□ - ■Mf-K	HS1620□ - ■Mf-E	HS2520□ - ■Mf-E	HS4020□ - ■Mf-N	HS2530□ - ■Mf-N
Rated voltage [kV]			24	24	24	24	36
Rated current [A] ■ : 06, 12, 20, 30		JEC	600	600, 1200	1200, 2000	1200, 2000 3000	600, 1200 2000
		IEC	630	630, 1250	1250, 2000	1250, 2000 3000	630, 1250 2000
Rated breaking capacity		[kA]	12.5	16	25	40	25
		[MVA] Ref. value	520	665	1000	1660	1600
Rated short-circuit making current [kA]			31.5	40	63	100	63
Rated short-time withstand current [kA]	JEC: 2 sec. IEC: 1 sec. *1		12.5 12.5	16 16	25 25	40 40	25 25
Rated breaking time [cycle]			3	3	3	5	3
Rated withstand voltage	Power frequency (1 min.)	JEC [kV] IEC [kV]	50 50	50 50	50 50	50 50	70 70
	Impulse (1.2×50μs) [kV]		125	125	125	125	170
Closing time at no load [sec.]			0.04	0.04	0.04	0.1	0.1
Rated operating sequence		JEC IEC	O-1min-CO-3min-CO, CO-15s-CO or O-0.35s-CO-1min-CO O-3min-CO-3min-CO, CO-15s-CO or O-0.3s-CO-3min-CO				
Opening time [sec.]		JEC	0.03	0.03	0.03	0.07	0.04
		IEC	0.03	0.03	0.03	0.07	0.04
Closing system			Motor-spring stored energy (High speed reclosing) (M)				
Operating voltage and current for closing			100V AC/DC, 2A 200V AC/DC, 1A		100V AC/DC, 2.5A 200V AC/DC, 1.7A	100V AC/DC, 6A 200V AC/DC, 3A	
Control voltage and current for closing			100V AC/DC, 4A 200V AC/DC, 2A		100V AC/DC, 5A 200V AC/DC, 2.5A	100V AC/DC, 4A 200V AC/DC, 2A	
Tripping system *2			Shunt trip (f)				
Operating voltage and current for tripping			100V DC, 4A 200V DC, 2A				
Auxiliary contact			4NO+4NC, Rating 100/200V AC: 20/10A, 100/200V DC: 20/10A				
Durability	Mechanical [operations] Electrical [operations]		10000 10000				
Installation □			P, X, Y	P, X, Y	P, X, Y	P, Y	P, M, X
Mass (draw-out type without cradle) [kg]			120 (P, X: 600A) 150 (Y)	120 (P, X: 600A) 130 (P, X: 1200A) 150 (Y)	190 (Y: 1200A) 200 (Y: 2000A)	280 (1200A) 280 (2000A) 350 (3000A)	280 (M, X: 600A) 280 (M, X: 1200A) 300 (M, X: 2000A)

Notes: *1 Contact FUJI for the information concerning the 3 sec. rating of IEC.
*2 If capacitor tripping system is required, connect a capacitor trip device VCB-T1A or VCB-T2A (optional accessory) to AC power supply.

Vacuum circuit breakers
HS series

■ Types and ratings, 3.6/7.2kV

Rating			Closing system		Tripping	Type	□ : Available installation system *1
Volts (kV)	Breaking current (kA)	Current (A)	Closing system *2	Operating voltage	voltage Shunt-trip(f)		
3.6/7.2	20	600	M	100/110V DC	100/110V DC	**HS2006□-06Mf-E**	P, X, U, Y
		1200	M	100/110V DC	100/110V DC	**HS2006□-12Mf-E**	
		2000	M	100/110V DC	100/110V DC	**HS2006□-20Mf-E**	
	25	600	M	100/110V DC	100/110V DC	**HS2506□-06Mf-E**	P, X, U, Y
		1200	M	100/110V DC	100/110V DC	**HS2506□-12Mf-E**	
		2000	M	100/110V DC	100/110V DC	**HS2506□-20Mf-E**	
	31.5	1200	M	100/110V DC	100/110V DC	**HS3106□-12Mf-E**	P, X, Y
		2000	M	100/110V DC	100/110V DC	**HS3106□-20Mf-E**	
	40	1200	M	100/110V DC	100/110V DC	**HS4006□-12Mf-E**	P, X, Y
		2000	M	100/110V DC	100/110V DC	**HS4006□-20Mf-E**	
		4000	M	100/110V DC	100/110V DC	**HS4006□-40Mf-N**	P, X
	50	1200	M	100/110V DC	100/110V DC	**HS5006□-12Mf-NA**	P, Y
		2000	M	100/110V DC	100/110V DC	**HS5006□-20Mf-NA**	
		3000	M	100/110V DC	100/110V DC	**HS5006□-30Mf-N**	
	63	1200	M	100/110V DC	100/110V DC	**HS6306□-12Mf-NB**	Y
		2000	M	100/110V DC	100/110V DC	**HS6306□-20Mf-NB**	

Notes: *1 Installation system
P: Fixed type
X: Draw-out type with cradle for JEM 1425 Class CW
U: Draw-out type with cradle for JEM 1425 Class CW
Y: Draw-out type with cradle and shutter for JEM 1425 Class MW, PW
*2 Closing system
M: Motor-spring stored-energy (High speed reclosing)

■ Types and ratings, 12kV

Rating			Closing system		Tripping	Type	□ : Available installation system *1
Volts (kV)	Breaking current (kA)	Current (A)	Closing system *2	Operating voltage	voltage Shunt-trip(f)		
12	12.5	600	M	100/110V DC	100/110V DC	**HS1210□-06Mf-E**	P, X, Y
		1200	M	100/110V DC	100/110V DC	**HS1210□-12Mf-E**	
		2000	M	100/110V DC	100/110V DC	**HS1210□-20Mf-E**	
	16	600	M	100/110V DC	100/110V DC	**HS1610□-06Mf-E**	P, X, Y
		1200	M	100/110V DC	100/110V DC	**HS1610□-12Mf-E**	
		2000	M	100/110V DC	100/110V DC	**HS1610□-20Mf-E**	
	20	600	M	100/110V DC	100/110V DC	**HS2010□-06Mf-E**	P, X, Y
		1200	M	100/110V DC	100/110V DC	**HS2010□-12Mf-E**	
		2000	M	100/110V DC	100/110V DC	**HS2010□-20Mf-E**	

Notes: *1 Installation system
P: Fixed type
X: Draw-out type with cradle for JEM 1425 Class CW
Y: Draw-out type with cradle and shutter for JEM 1425 Class MW, PW
*2 Closing system
M: Motor-spring stored-energy (High speed reclosing)

■ Types and ratings, 12kV

Rating			Closing system		Tripping	Type	□ : Available installation system *1
Volts (kV)	Breaking current (kA)	Current (A)	Closing system *2	Operating voltage	voltage Shunt-trip(f)		
12	25	600	M	100/110V DC	100/110V DC	**HS2510□-06Mf-E**	P, X, Y
		1200	M	100/110V DC	100/110V DC	**HS2510□-12Mf-E**	
		2000	M	100/110V DC	100/110V DC	**HS2510□-20Mf-E**	
	31.5	1200	M	100/110V DC	100/110V DC	**HS3110□-12Mf-E**	P, X, Y
		2000	M	100/110V DC	100/110V DC	**HS3110□-20Mf-E**	
		3000	M	100/110V DC	100/110V DC	**HS3110□-30Mf-N**	P, Y
	40	1200	M	100/110V DC	100/110V DC	**HS4010□-12Mf-NA**	P, Y
		2000	M	100/110V DC	100/110V DC	**HS4010□-20Mf-NA**	
		3000	M	100/110V DC	100/110V DC	**HS4010□-30Mf-N**	P, Y
		4000	M	100/110V DC	100/110V DC	**HS4010□-40Mf-N**	X
	50	1200	M	100/110V DC	100/110V DC	**HS5010□-12Mf-NA**	P, Y
		2000	M	100/110V DC	100/110V DC	**HS5010□-20Mf-NA**	
		3000	M	100/110V DC	100/110V DC	**HS5010□-30Mf-N**	

Notes: *1 Installation system P: Fixed type
X: Draw-out type with cradle for JEM 1425 Class CW
Y: Draw-out type with cradle and shutter for JEM 1425 Class MW, PW
*2 Closing system M: Motor-spring stored-energy (High speed reclosing)

■ Types and ratings, 24kV and 36kV

Rating			Closing system		Tripping	Type	□ : Available installation system *1
Volts (kV)	Breaking current (kA)	Current (A)	Closing system *2	Operating voltage	voltage Shunt-trip(f)		
24	12.5	600	M	100/110V DC	100/110V DC	**HS1220□-06Mf-K**	P, X, Y
	16	600	M	100/110V DC	100/110V DC	**HS1620□-06Mf-E**	P, X, Y
		1200	M	100/110V DC	100/110V DC	**HS1620□-12Mf-E**	
	25	1200	M	100/110V DC	100/110V DC	**HS2520□-12Mf-E**	P, X, Y
		2000	M	100/110V DC	100/110V DC	**HS2520□-20Mf-E**	
	40	1200	M	100/110V DC	100/110V DC	**HS4020□-12Mf-N**	P, Y
		2000	M	100/110V DC	100/110V DC	**HS4020□-20Mf-N**	
		3000	M	100/110V DC	100/110V DC	**HS4020□-30Mf-N**	
36	25	600	M	100/110V DC	100/110V DC	**HS2530□-06Mf-N**	P, M, X
		1200	M	100/110V DC	100/110V DC	**HS2530□-12Mf-N**	
		2000	M	100/110V DC	100/110V DC	**HS2530□-20Mf-N**	

Notes: *1 Installation system P: Fixed type
X: Draw-out type with cradle for JEM 1425 Class CW
Y: Draw-out type with cradle and shutter for JEM 1425 Class MW, PW
M: Draw-out type for HS2530
*2 Closing system M: Motor-spring stored-energy (High speed reclosing)

Vacuum circuit breakers
HS series

■ Installation and supplied accessories

Vacuum circuit breaker	Cradle	Construction	Accessories
P-fixed mounting type AF93-314		The VCB shall be fixed to the switchgear by means of 4 bolts. No draw-out system is provided. Wheels are provided to facilitate movement or transport. Open type cubicle	• Clamp bolts (4 ea. for one unit) • Closing handle • Plug-in connector for control circuit • On-off counter
X-draw-out type 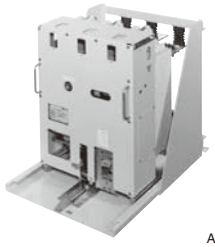 AF93-312	SF-877	A cradle is provided with a draw-out system. This cradle makes unnecessary the provision of rails or main circuit connector for the switchgear. No mechanical adjustment is required. JEM 1425 Class CW type metal enclosure	• On-off counter • Cradle with draw-out system (Main circuit connector, earthing shoe, rail, etc.) • Plug-in connector • Closing handle • Draw-out handle
Y-draw-out type 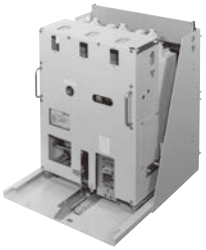 AF93-313	SF-1055	A cradle is provided with a draw-out system to accept the metal-clad switchgear, which is provided with a shutter. All the necessary parts are provided for this type of breaker. The switchgear is very easy to assemble. JEM 1425 Class PW or MW type metal-clad switchgear	• On-off counter • Cradle with draw-out system (Main circuit connector, earthing shoe, rail, shutter, etc.) • Plug-in connector • Closing handle • Draw-out handle

■ Optional accessories

Capacitor trip device/VCB-T1A, T2A

KK04-064

This is used when the trip circuit is connected to an AC power supply, and as well as the capacitor, semiconductors are also built in. It provides a DC output and the trip coil is DC rated.

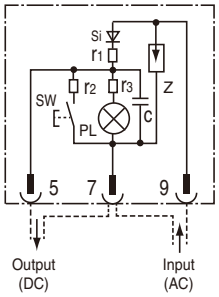

Vacuum condition tester/VC-1A

See page E2-23.

Type	Description
VCB-T1A	Capacitor trip device 100/110V AC
VCB-T2A	Capacitor trip device 200/220V AC
AF3320R3TC5R	C-R surge absorber for 3.3kV
AF6620R3TC5R	C-R surge absorber for 6.6kV
VC-1A	Vacuum condition tester 100V AC 50/60Hz

Lifting dolly
L-2HS, L-4HS

FA215

Lifting dolly

Type	Description	
L-2HNB	7.2kV: 20/25kA 12kV: 20/25kA	 600, 1200A
L-2HS40E	7.2kV: 31.5/40kA 12kV: 12.5/16/20/25kA	1200, 2000A 2000A
L-4HS43N	12kV: 40/50kA 24kV: 40kA	1200, 2000A 1200, 2000A

Fuji Electric FA Components & Systems Co., Ltd.
Information subject to change without notice

■ Dimensions, mm

Draw-out/X type

HS2006X-06Mf-E, HS2506X-06Mf-E

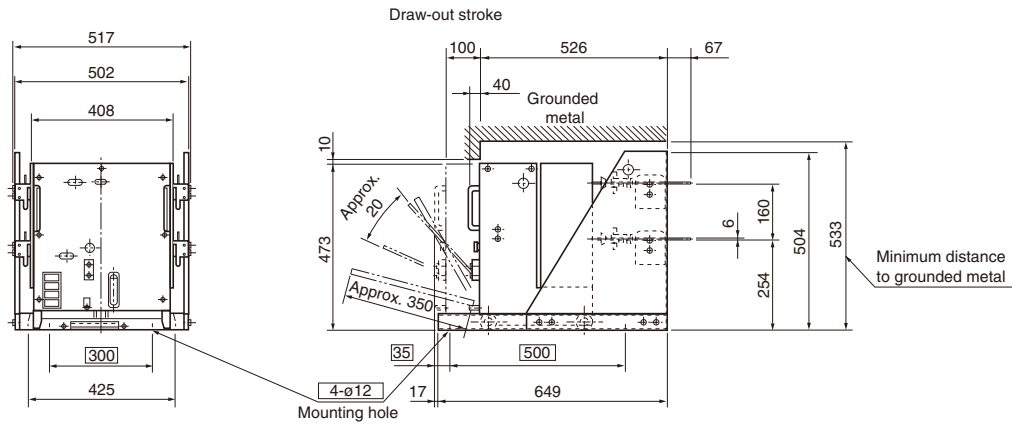

Terminal

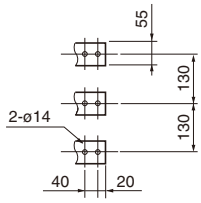

HS2006X-12Mf-E, HS2506X-12Mf-E

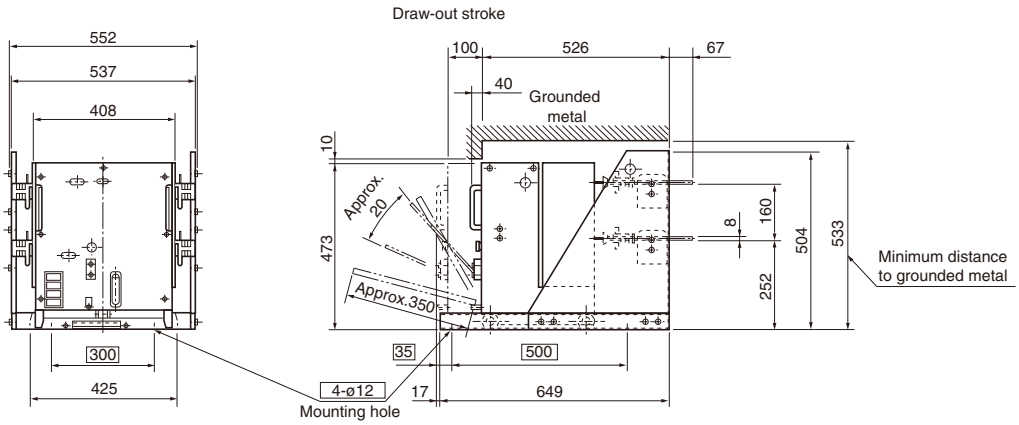

Terminal

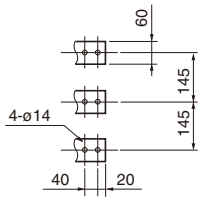

HS3106X-12Mf-E, HS4006X-12Mf-E

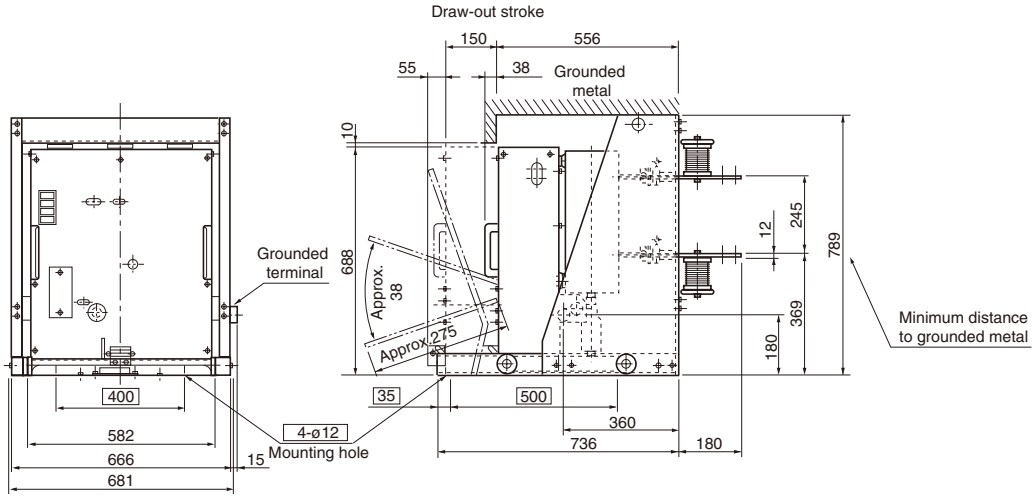

Terminal

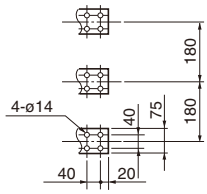

Vacuum circuit breakers
HS series

■ Dimensions, mm

Draw-out/X type

HS3106X-20Mf-E, HS4006X-20Mf-E

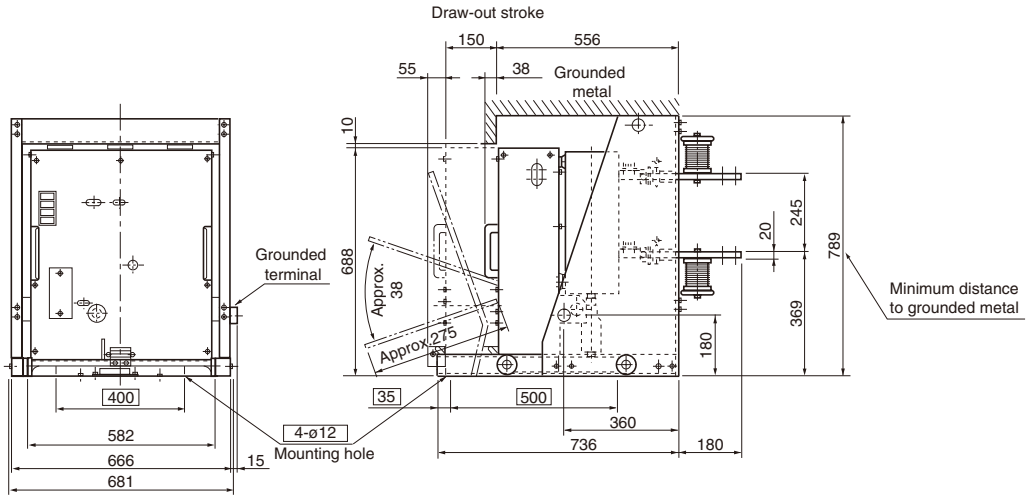

Terminal

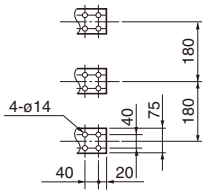

HS4006X-40Mf-N, HS4010X-40Mf-N

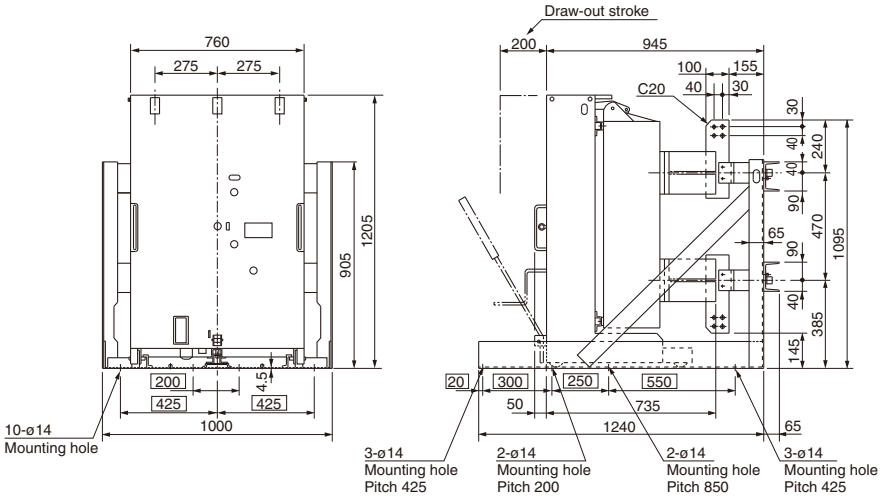

HS1210X-06Mf-E, 12Mf-E, HS1610X-06Mf-E, 12Mf-E, HS2010X-06Mf-E, 12Mf-E, HS2510X-06Mf-E, 12Mf-E

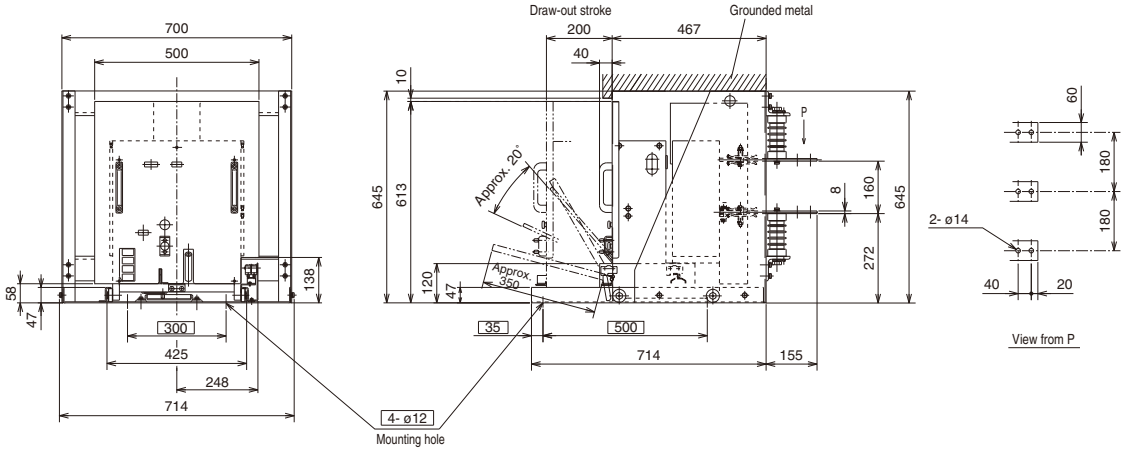

■ Dimensions, mm

Draw-out/X type

HS3110X-12Mf-E

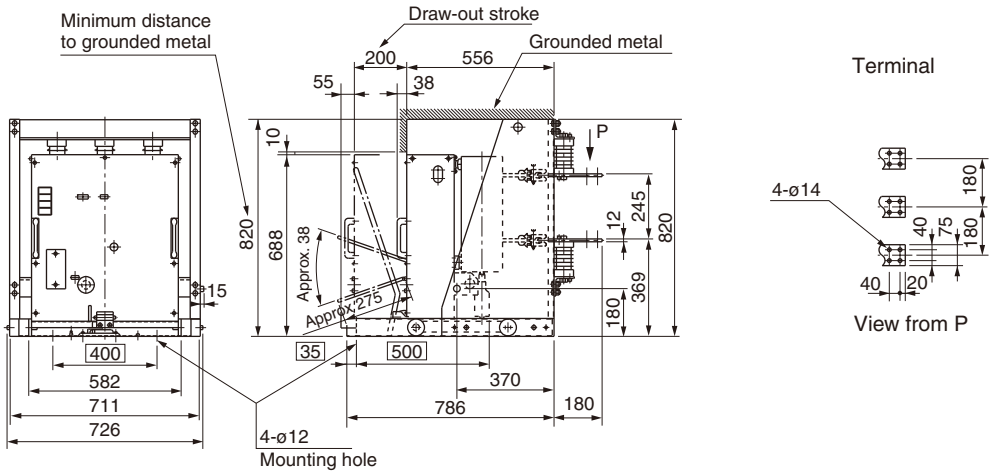

HS1210X-20Mf-E, HS1610X-20Mf-E, HS2010X-20Mf-E, HS2510X-20Mf-E, HS3110X-20Mf-E

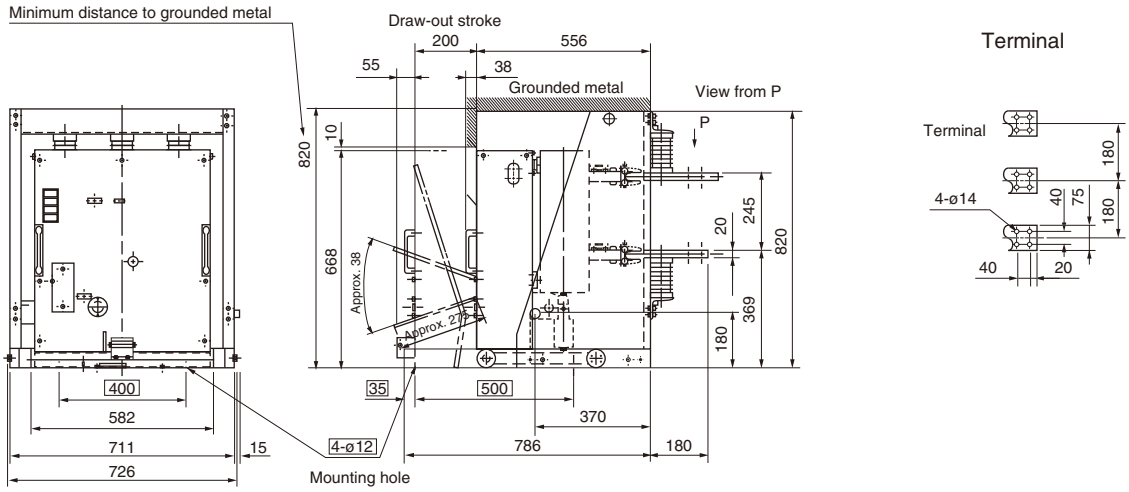

HS1220X-06Mf-K, HS1620X-06Mf-E

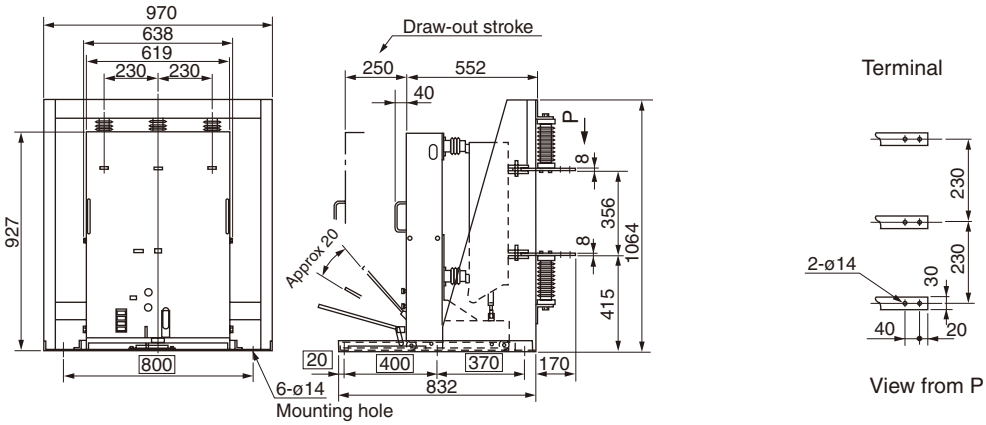

Vacuum circuit breakers
HS series

■ Dimensions, mm

Draw-out/X

HS2520X-06Mf-E

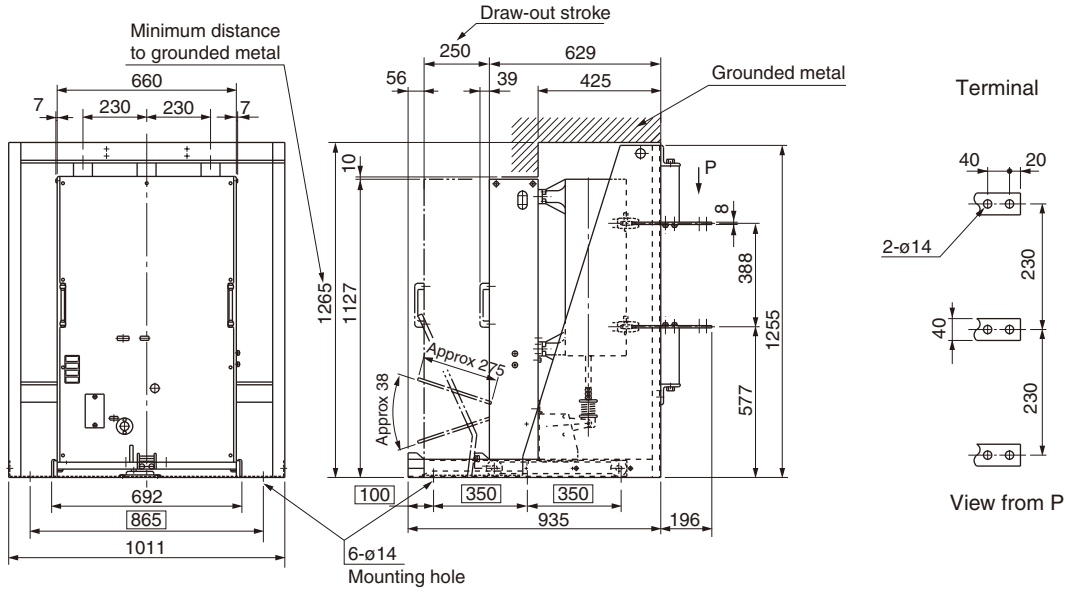

Draw-out/Y type

HS2006Y-06Mf-E, HS2506Y-06Mf-E

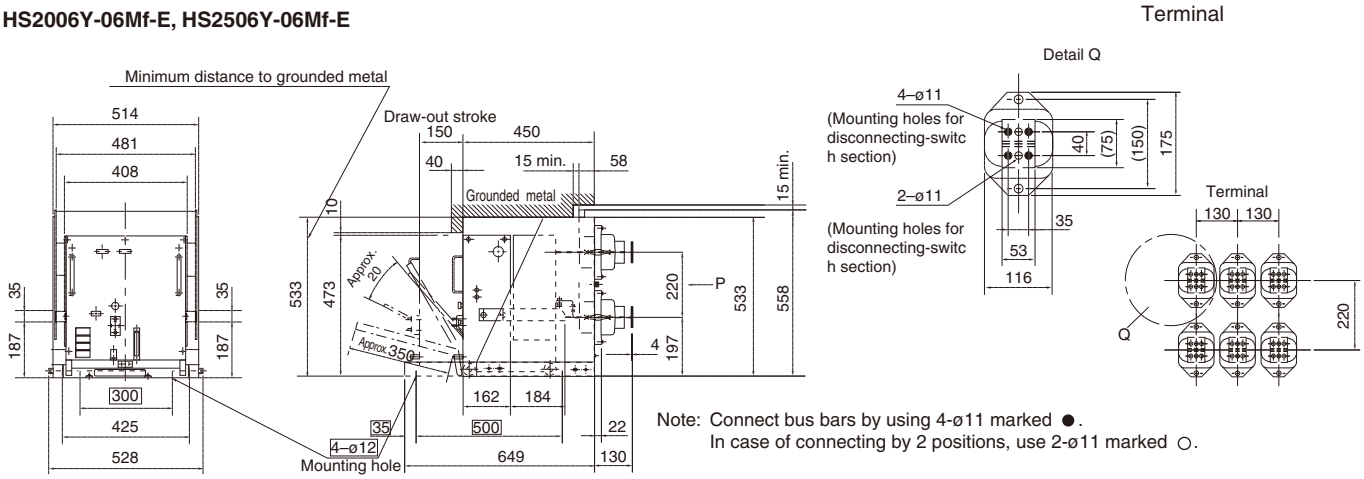

Note: Connect bus bars by using 4-ø11 marked ●.
In case of connecting by 2 positions, use 2-ø11 marked ○.

HS2006Y-12Mf-E, HS2506Y-12Mf-E

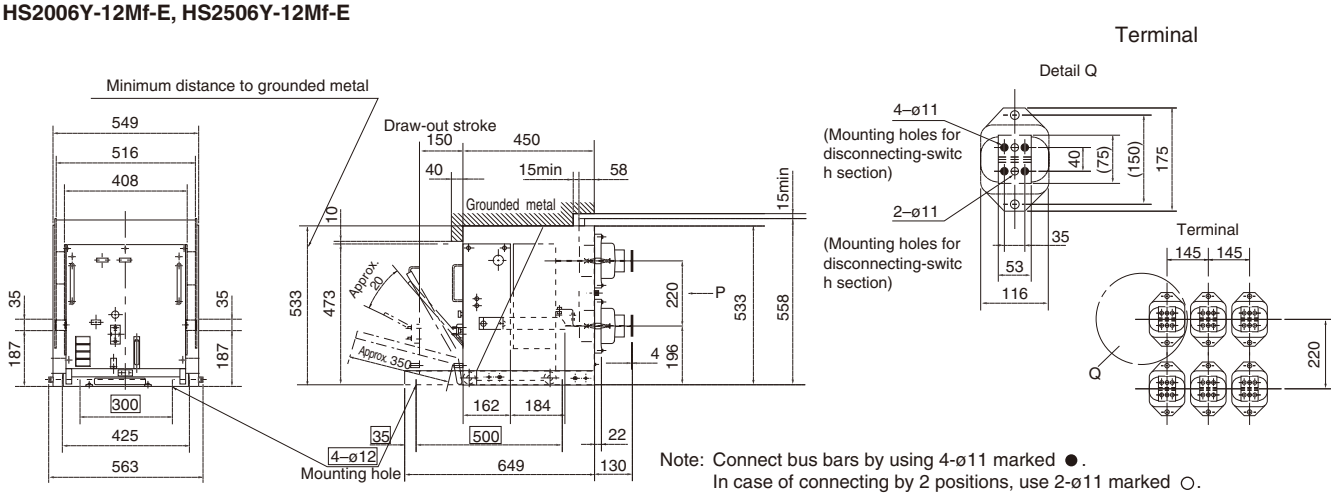

Note: Connect bus bars by using 4-ø11 marked ●.
In case of connecting by 2 positions, use 2-ø11 marked ○.

HS2006Y-20Mf-E, HS2506Y-20Mf-E

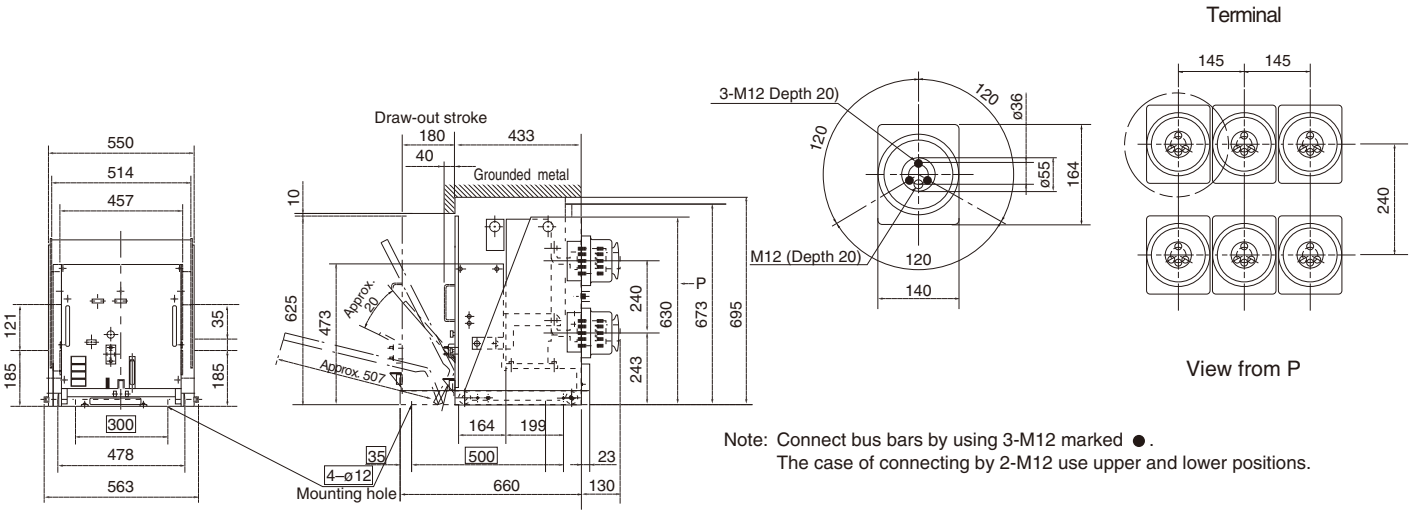

Note: Connect bus bars by using 3-M12 marked ●.
The case of connecting by 2-M12 use upper and lower positions.

HS3106Y-12Mf-E, HS4006Y-12Mf-E

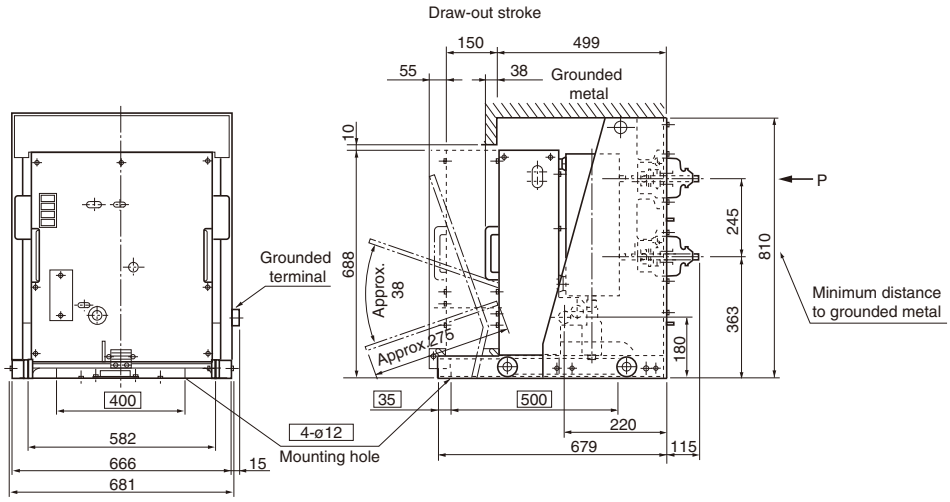

HS3106Y-20Mf-E, HS4006Y-20Mf-E

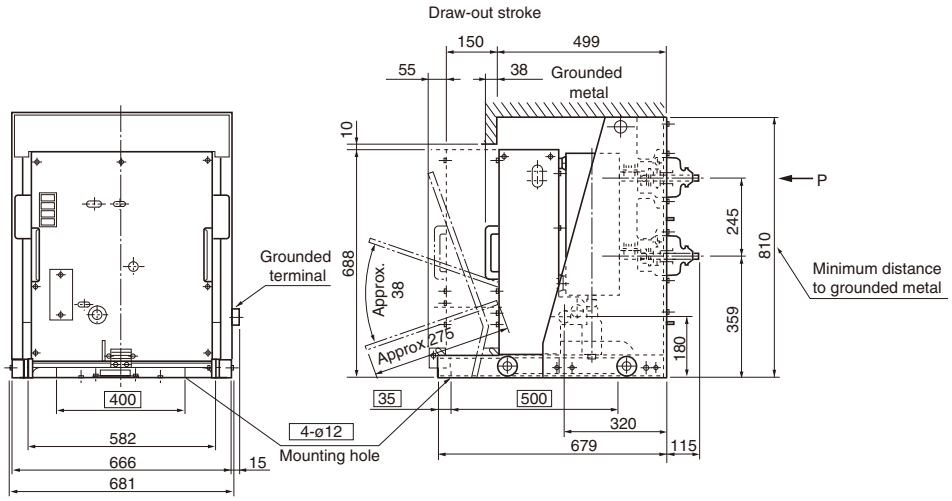

Vacuum circuit breakers
HS series

■ Dimensions, mm

Draw-out/Y type

HS4010Y-12Mf-NA, 20Mf-NA

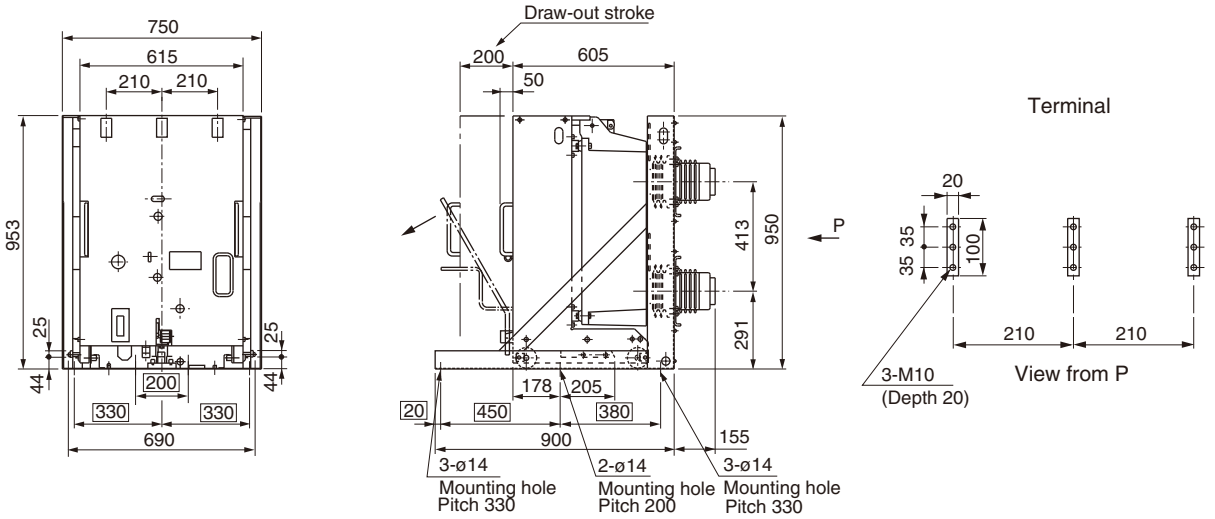

HS3106Y-30Mf-E, HS4006Y-30Mf-E, HS3110Y-30Mf-N

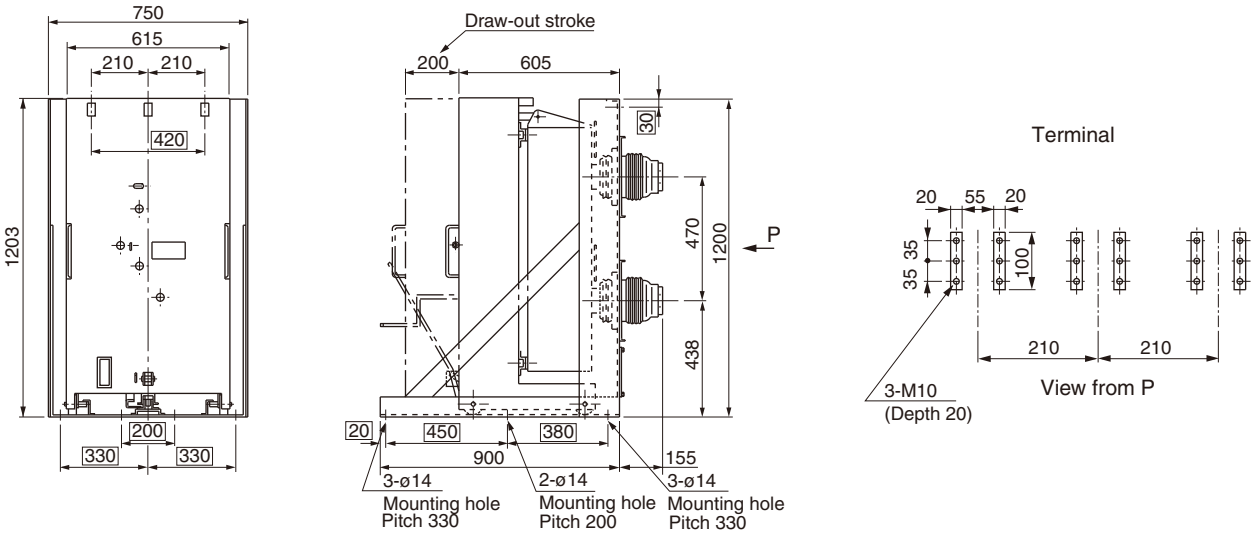

HS5006Y-12Mf-NA, 20Mf-NA, HS5010Y-12Mf-NA, 20Mf-NA

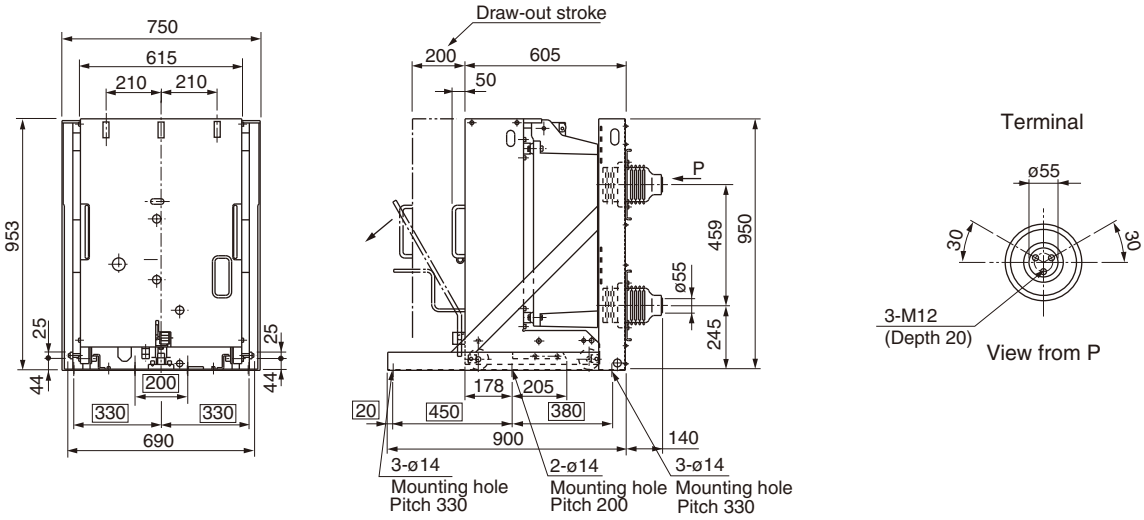

■ Dimensions, mm

Draw-out/Y type

HS5006Y-30Mf-N, HS5010Y-30Mf-N

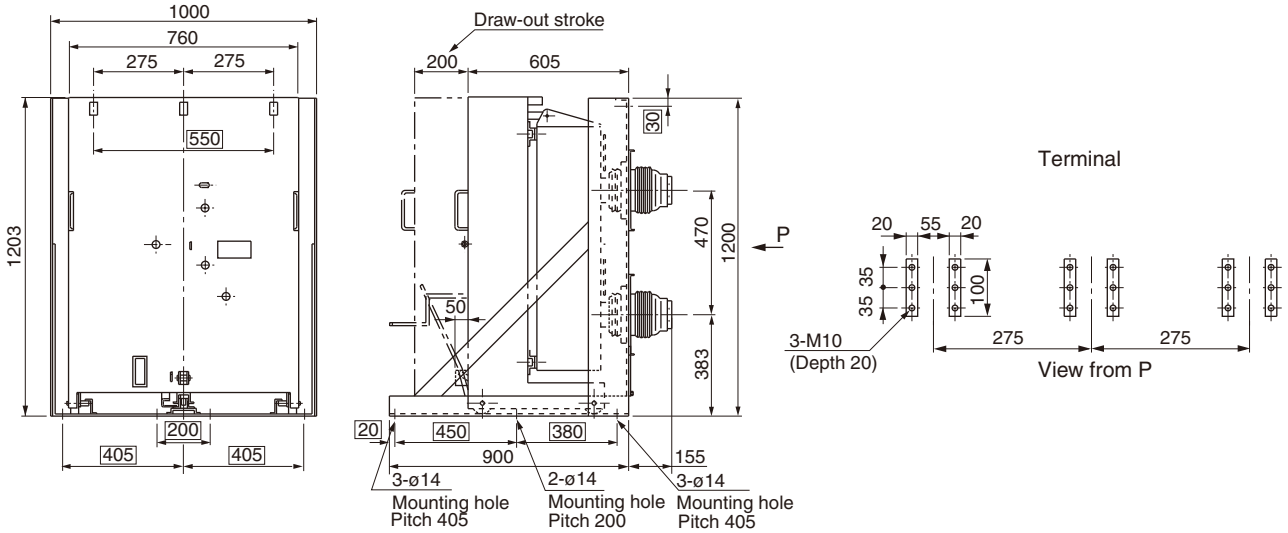

HS1210Y-06Mf-E, 12Mf-E, HS1610Y-06Mf-E, 12Mf-E, HS2010Y-06Mf-E, 12Mf-E
HS2510Y-06Mf-E, 12Mf-E

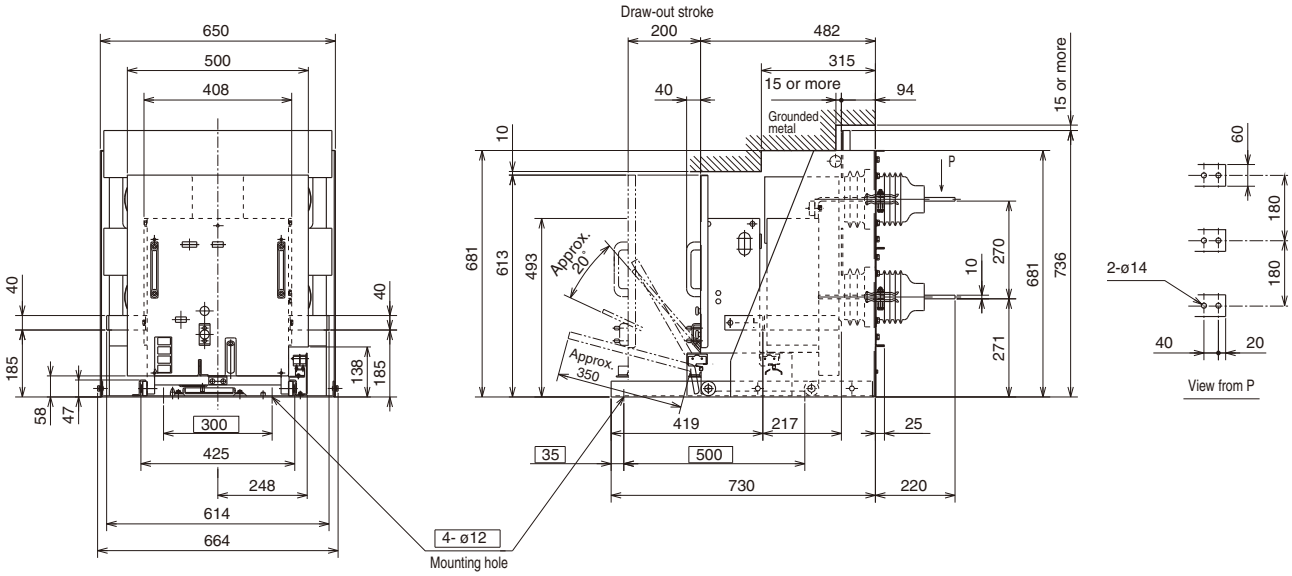

HS1210Y-20Mf-E, HS1610Y-20Mf-E, HS2010Y-20Mf-E, HS2510Y-20Mf-E, HS3110Y-12Mf-E, 20Mf-E

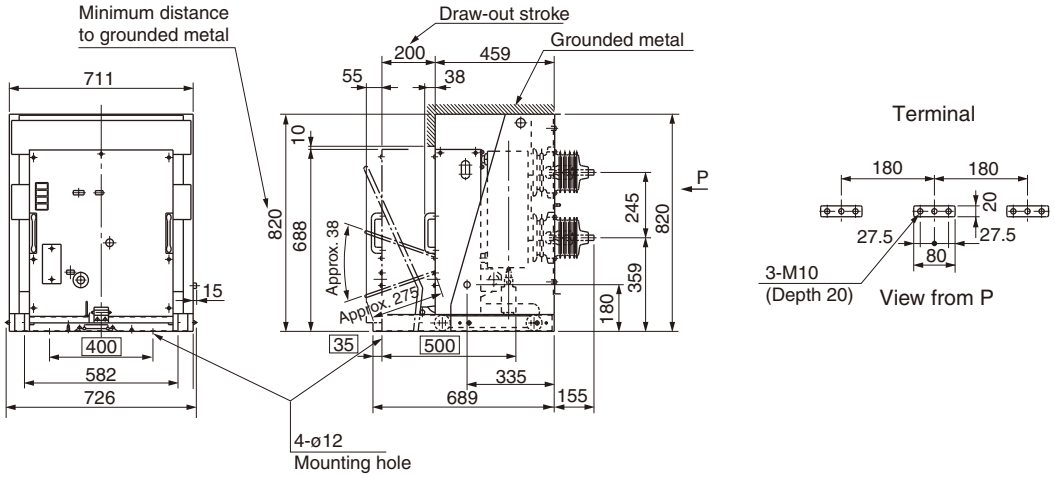

Vacuum circuit breakers
HS series

■ Dimensions, mm

Draw-out/Y type

HS4010Y-30Mf-N

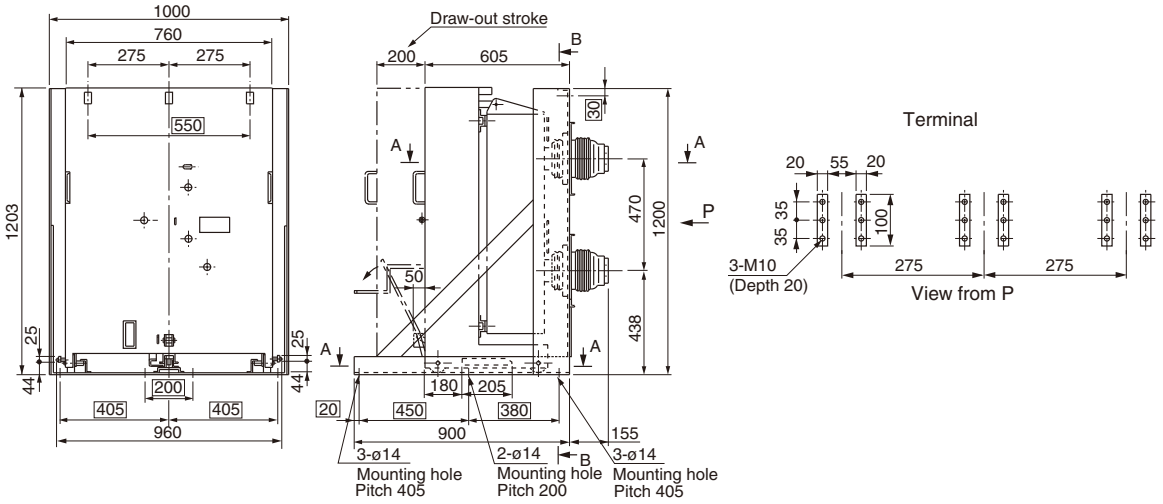

HS1220Y-06Mf-K

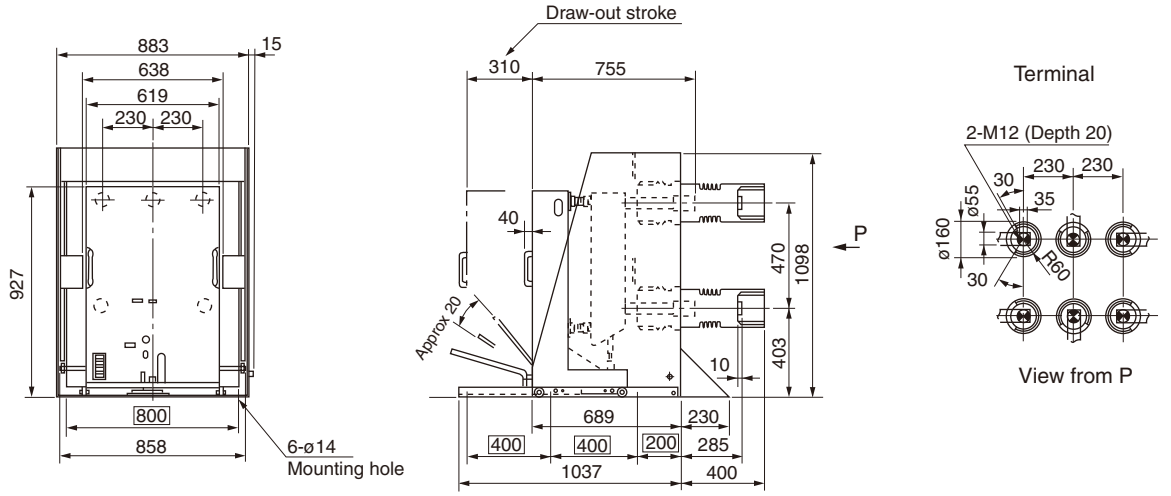

HS1620Y-06Mf-E, 12Mf-E

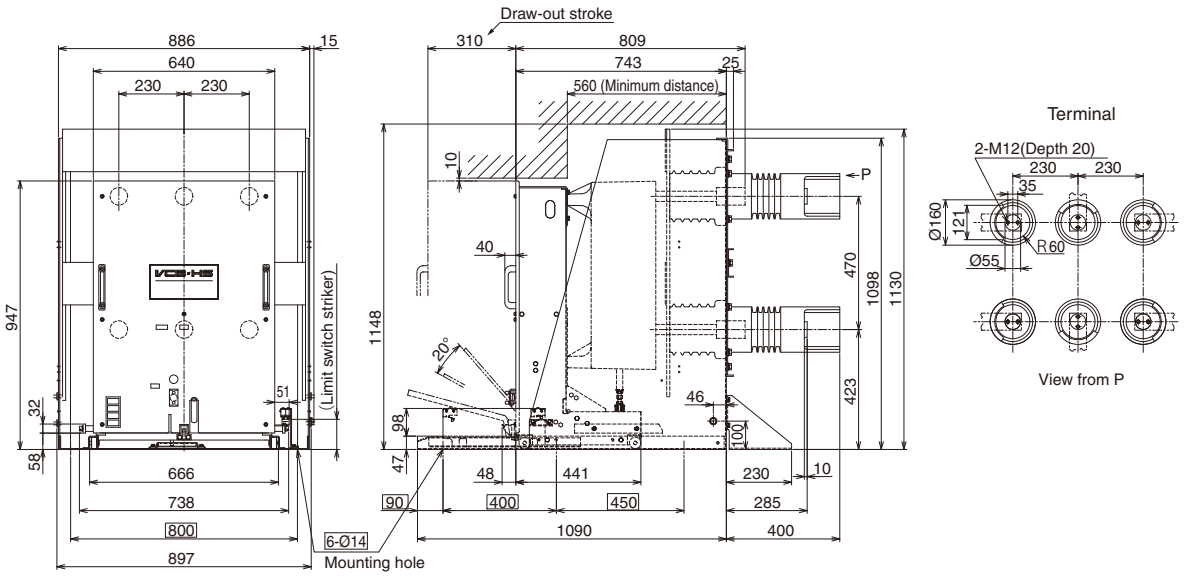

■ Dimensions, mm

Draw-out/Y type

HS2520Y-12Mf-E, 20Mf-E

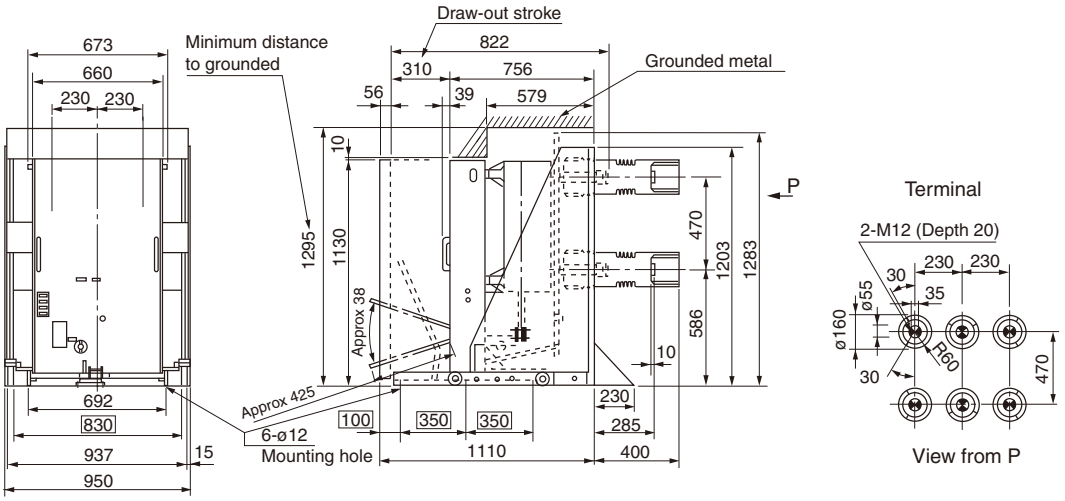

HS4020Y-12Mf-N, 20Mf-N

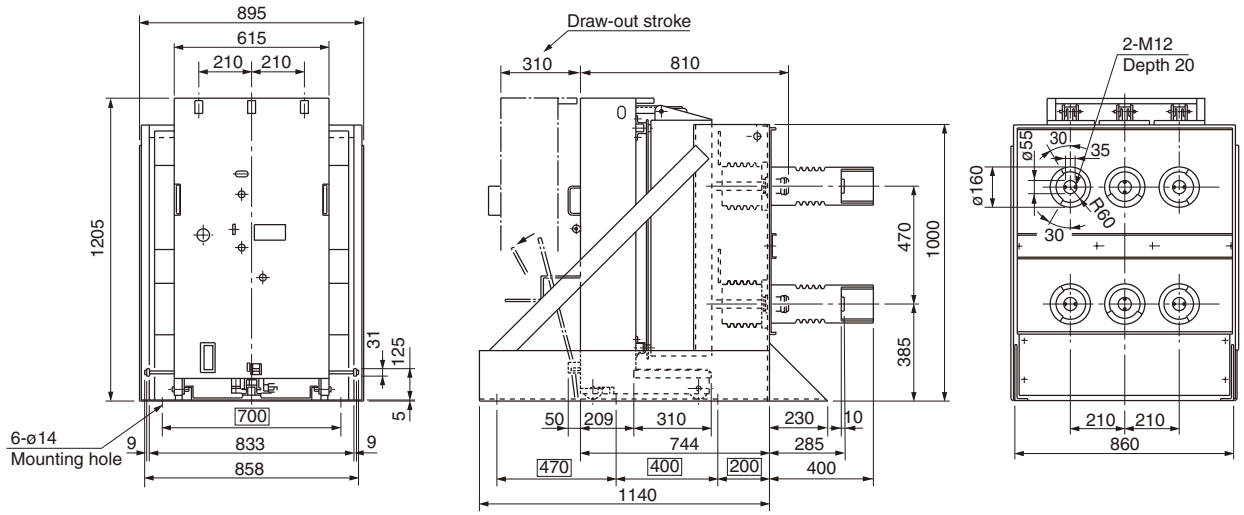

HS4020Y-30Mf-N

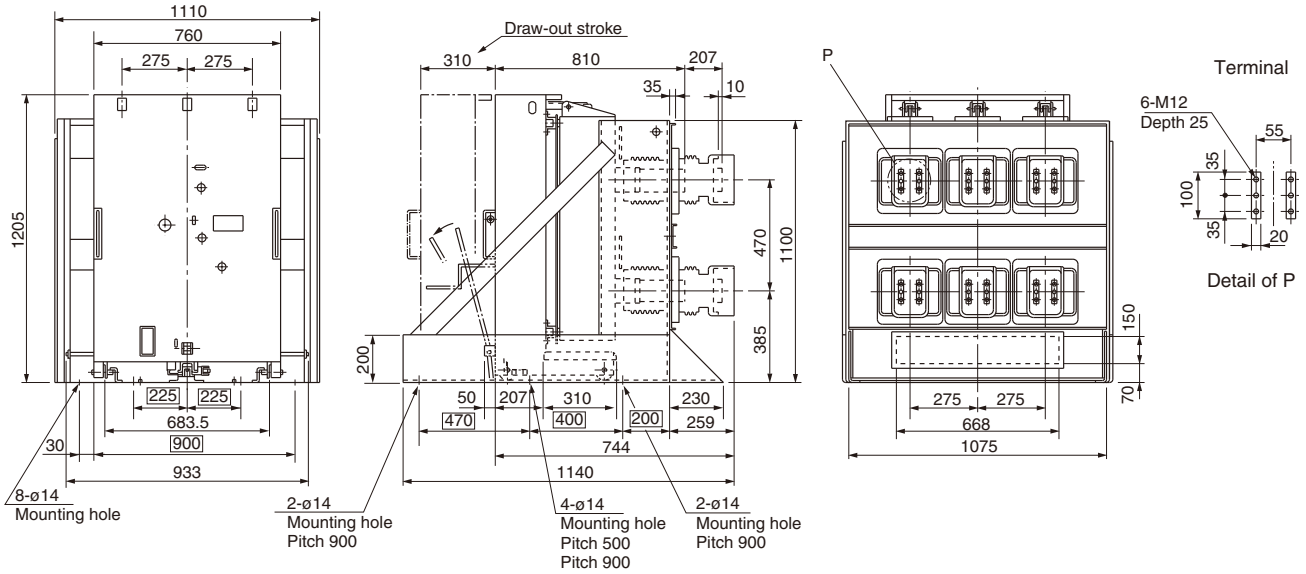

■ Dimensions of other types: Contact Fuji.

■ Wiring diagrams

● HS2006, HS2506, HS1210, HS1610, HS2010, HS2510, HS1220, HS1620

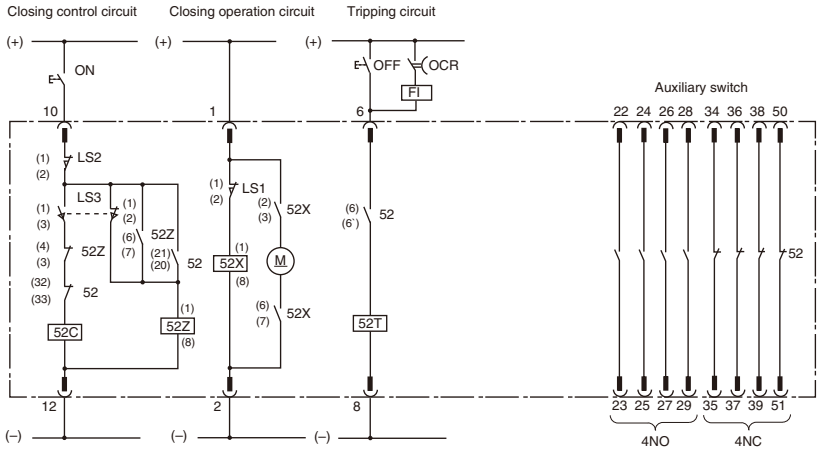

Terminal arrangement of control circuit receptacle
(A front view of CB mounted receptacles)

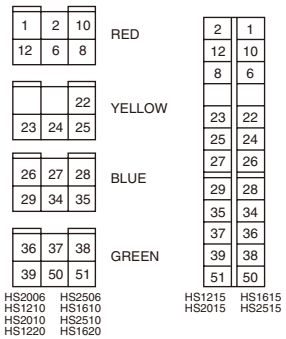

● HS3106-E, HS4006-E, HS3110-E

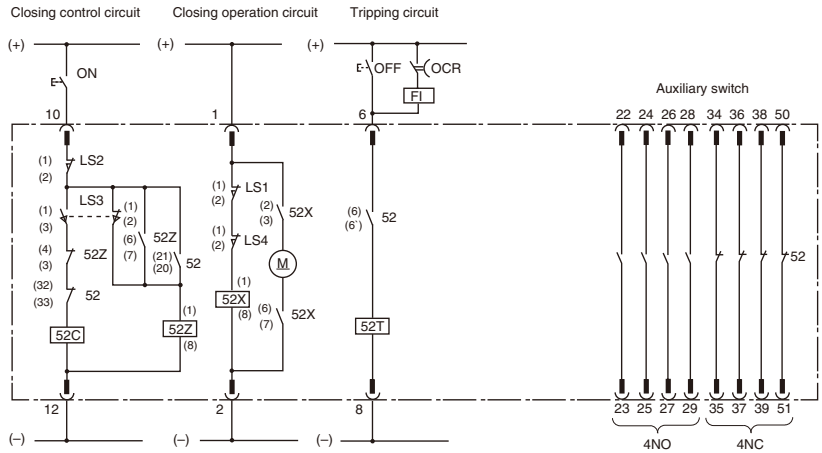

Terminal arrangement of control circuit receptacle
(A front view of CB mounted receptacles)

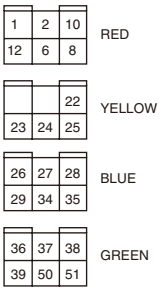

● HS3106-N, HS4006-N, HS5006, HS6306, HS3110-N, HS4010, HS5010, HS2520, HS4020, HS2530

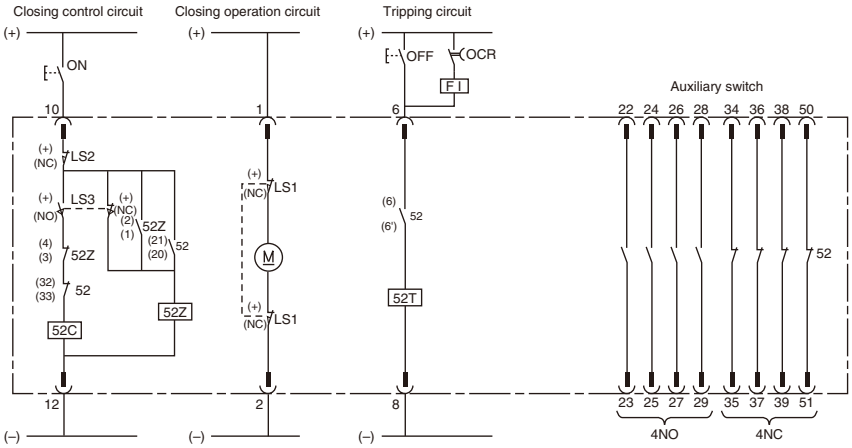

Terminal arrangement of control circuit receptacle
(A front view of CB mounted receptacles)

External terminal of VCB
52 : VCB
52X : Magnetic contactor
52Z : Anti-pumping relay
52C : Closing coil
52T : Shunt trip coil

M : Motor
LS_1 : Limit switch (Opens when the closing spring is in the stored condition)

LS_2 : Interlocking contact (Only draw-out type)
LS_3 : Limit switch (Closes when the closing spring is in the stored condition)
LS_4 : Limit switch (Opens when the closing pushbutton is operated)
OCR : Overcurrent relay
FI : Fail Indicator

■ Application guide of surge absorber

When VCBs are interrupted especially under specific overlapping conditions, chopping surges or surges due to multiple restrikes will cause an escalating effect.
It is therefore recommended that surge absorbers and arresters are fitted to protect motors or transformers.

Load \ Voltage	3.3kV	6.6kV	11kV	22kV
Motor	● C-R suppressor	● C-R suppressor	● C-R suppressor	● Contact FUJI for further imformation
Molded transformer*1	–*2, *3 (BIL ≥ 45kV)	–*2, *3 (BIL ≥ 60kV)	●*3 Arrester (BIL ≥ 60kV)	●*3 Arrester (BIL ≥ 95kV)
Oil-immersed transformer*1	–*2, *3 (BIL ≥ 45kV)	–*2, *3 (BIL ≥ 60kV)	–*2, *3 (BIL ≥ 90kV)	●*3 (BIL ≥ 150kV)

Notes: ● : Suppression device required – : Suppression device not required
*1 The withstand voltages (impulse) of transformer must exceed the values listed above.
*2 When breaking a magnetizing inrush current , it is recommended that a suppression device will be used.
*3 Semiconductor device must be provided with suitable suppression devices when a semiconductor is installed on the load side of transformer.

● C-R type surge absorber

Type	AF3320R3TC5R	AF6620R3TC5R
Rated voltage	$\frac{3.3kV}{\sqrt{3}}$	$\frac{6.6kV}{\sqrt{3}}$
Rated frequency	50/60Hz	50/60Hz
Number of phases	3-phase	3-phase
Rated capacitance	0.1 μF × 3-phase	0.1 μF × 3-phase
Resistance value	100 Ω × 3-phase	100 Ω × 3-phase
Oil quantity	7.5 ℓ	6.9 ℓ
Mass	16kg	16kg

Dimensions, mm/Surge absorber

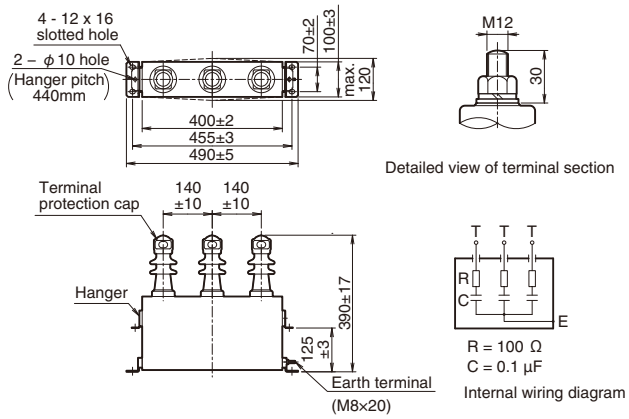

● Arrester/GLI

Type	GLI-3G	GLI-6G
Rated voltage	4.2kV	8.4kV
Nominal discharge current	2.5kA	2.5kA
Max. clamping voltage	15kV or less	30kV or less
Discharge current withstand capacity	30kA, 2 times	30kA, 2 times

■ Vacuum condition tester/VC-1A

It is recommended that a withstand voltage tester (type VC-1A, sold separately) is used to check the state of the vacuum within the vacuum interrupter. The method of testing is very simple. First, withdraw the VCB from its enclosure set at the OFF position and switch the control circuit to the isolation position. Then earth the VCB together with the VC-1A tester and apply a test voltage. In this case apply 22kV (if the VCB's rated voltage is 7.2kV) between the poles of the vacuum interrupter for one minute. Under these conditions if the vacuum is normal a continuous buzzer signal will be given during the period the test voltage is applied.
On the other hand an intermittent buzzer sound will be given if the vacuum is unserviceable. Replace with a new interrupter if necessary.

Type	VC-1A (Portable type)
Input voltage	100V 50/60Hz
Output voltage	22/11kV AC
Operation	Continuous (or 10 min. if the output is short-circuited)
Detecting current	When 1.0A current flows in the L.V. input circuit the detector relay operates and interrupts.
Timer	1-minute timer is built into the tester.
Accessories	Input cord: 3 meters. Cord for test use (with clips): 1.5 meters (2 leads)
Mass	20kg

KKD17-062

Vacuum condition tester VC-1A

Dimensions, mm

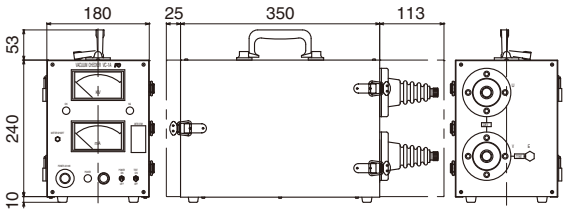

E2

Vacuum circuit breakers
AUTO.V

AUTO.V

■ Description

7.2/3.6kV, 400A, 600A, 8kA, 12.5kA
FUJI AUTO.Vs are vacuum circuit breakers which incorporate a built-in electronic OCR and CT.
As they do not require to have a CT installed inside the switchgear cubicle or an OCR fixed to the front panel, space is saved in the cubicle and wiring and installation are simplified.
A system protection is easily arranged using AUTO.Vs with primary circuit breaker and also a protective coordination with low voltage MCCBs. The CT is a compactly built toroidal type and it is fitted to the upper part of the VCB. Its overcurrent withstanding value is as large as 12.5kA, 1 sec.

■ Features

- Built-in electronic OCR and CT are provided
- System protective coordination is easily arranged using the VCBs.
- Compactly assembled, so saving space
- The built-in CT has a large overcurrent withstand value of 12.5kA.
- The setting range of the rated current is 24A to 320A.
- Applicable to the receiving and distribution facilities of 6kV, 170 to 2000kVA.

KKD14-102

■ Specifications

Type	Standard type	HA08A□-H6□ HA08A□-H7□	HA12A□-H6□ HA12A□-H7□	HA08A□-A6□ HA08A□-A7□	HA12A□-A6□ HA12A□-A7□
	Low surge type	HA08A□-H6□L HA08A□-H7□L	HA12A□-H6□L HA12A□-H7□L	HA08A□-A6□L HA08A□-A7□L	HA12A□-A6□L HA12A□-A7□L
Closing mechanism		Motor charging spring action		Motor charging spring action	
Installation method		Fixed type (B, C, P)		Fixed type (B, C, P)	
Rated voltage [kV]		3.6/7.2			
Rated current [A]		400	600	400	600
Rated frequency (Hz)		50/60			
Rated breaking current [kA]		8	12.5	8	12.5
Rated making current [kA]		20	31.5	20	31.5
Rated closing time [s]		-		0.03	
Rated short-time current [kA]		8	12.5	8	12.5
Insulation class		No. 6A			
Rated breaking time [cycle]		3			
Opening time [s]		0.035			
Standard operating duty		A, B (Note 1)			
Mechanical life expectancy [times]		1,000		10,000	
Electrical life expectancy [times]		1,000		10,000	
Operating cycle [times/hour]		60			
Applicable capacitor capacity [kVA] (Note 2)		3,000	5,000	3,000	5,000
Auxiliary switch		2NO+2NC (optionally supports max. 5NO+5NC)			
Total mass [kg]	Fixed type main unit	B:30, C:30, P:32		B:35, C:35, P:37	
Conformed standard		JIS C 4603 and JEC-2300; furthermore, overcurrent relay characteristics conform to JIS C 4602.			

(Note 1) A: O-1min-CO-3min-CO, B: CO-15sec-CO
(Note 2) This is the maximum value for a 6.6 kV circuit with a 6% reactor. It is half of this for 3.3 kV.

■ Design features

The four dials facilitate the setting of the overcurrent protection as followed:

● **Rated operating current**
Rated current range: 24 to 320A
(8 to 80A)
No. of steps: 15
Steps from 24A to 320A can be set by the two dials—CT's primary current dial and multiplying factor dial of primary current.
These breakers are most suitable for receiving and distributing facilities with capacities from 6kV, 170 to 2000kVA.
Since the rating for the primary current can be freely changed expenses for changing the CT ratio can be saved when expanding electrical facilities.

● **Operating time**
No. of steps: 16 (T=50 to T=0.5)
The operating time setting dial of the solid-state OCR's corresponds with the time lever of the induction type OCR's. It has 16 steps, from
T = 50 to T = 0.5.

● **Instantaneous trip current**
Trip current: 5 to 15 times the operating current.
This device is designed to instantaneously trip when a large current flows due to a short-circuit fault. It can be set so it does not operate in the face of inrush currents due to either transformers or capacitors and a coordination can be arranged with primary circuit breakers. It can be set to operate at between 5 and 15 times its operating current.

Operating current and time setting range for AUTO.V

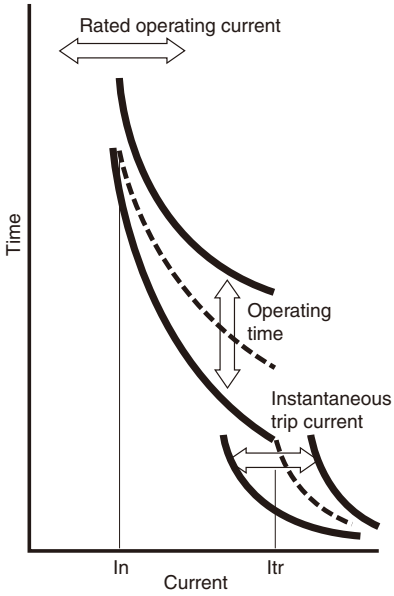

In = Rated current
Itr = Instantaneous tripping current

Rated operating current setting dials

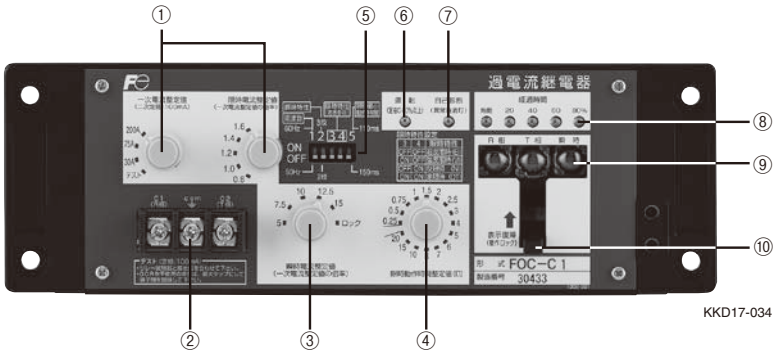

KKD17-034

(1) The OCR settings make use of a multi-range system.
(1) Rated operating current settings
By combining the use of the primary current setting dial and time delay setting value dial, it is possible to configure the rated operating current settings to the types shown in the below table.

Rated operating current value [A]

Primary current setting dial		Time delay setting dial				
		0.8	1.0	1.2	1.4	1.6
Lower rating	10 A	8	10	12	14	16
	20 A	16	20	24	28	32
	50 A	40	50	60	70	80
Standard	30 A	24	30	36	42	48
	75 A	60	75	90	105	120
	200 A	160	200	240	280	320
Test		For use in OCR tests				

(2) Operation test terminal
When performing an operation test, set the rated operating current setting dial to the test position and apply a test current between the terminals C1-Com and C2-Com.

(3) Instantaneous setting dial
The instantaneous operating current can be set to 5 to 15 times that of the configured rated operating current value. Set to the lock position to stop the instantaneous functionality.

(4) Time delay (operating) time dial
A wide range of settings can be made, including 16 setting levels between T=0.25 to T=20.

(5) Setting switchover switch
The following settings are available for the OCR:
・Frequency (50 Hz/60 Hz)
・4-characteristic time delays (super inverse time delay/strong inverse time delay/inverse time delay/ definite time delay)
・2-instantaneous characteristics (2-step/3-step)
・Time-delay minimum operating time (110 ms/150 ms)

Protective coordination settings have been easily enabled

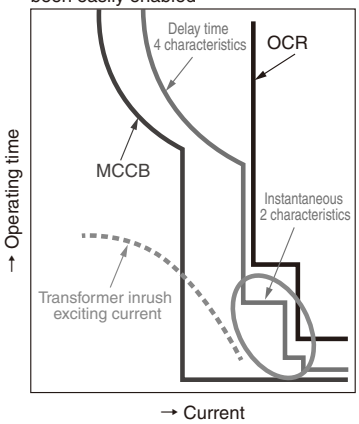

(6) Operation
The LED lights up (green) when operation exceeds 40% of the primary current setting value.

(7) Self-diagnosis
The system operation of the microcomputer is constantly monitored. During normal operation the LED lights up (green). At times of abnormality, the LED turns off.

(8) Elapsed time
・Start indication
When the overcurrent operating current setting value is reached, the LED lights up (red).
・Operating time elapse indication
The LED lights up (red) gradually in steps of 20, 40, 60, and 80% until reaching the operation point.

(9) Operation indicator
The color changes to orange when the OCR starts.
(10) Reset lever
Reset the OCR operation display by using the reset lever.

(2) Inertia characteristic achieving at least 90%
The inertia characteristic refers to the so-called inoperative (tolerance) characteristic. It restricts the operating characteristics of lower-level circuit breakers. The AUTO.V comes equipped with an inertia characteristic so that it can be combined with the inoperative characteristic of molded case circuit breakers (MCCB).

Vacuum circuit breakers
AUTO.V

■ Types and ratings

Rated breaking current	Installation method	Operation method	Tripping method	Type
8 kA	Board type (B)	Manual spring (H)	Current tripping method 100/110 V AC Equipped with shunt tripping function	**HA08AB-H6F**
	Cubicle type (C)			**HA08AC-H6F**
	Portable type (P)			**HA08AP-H6F**
	Board type (B)	Motor charging spring (A) 100/110 V AC/DC		**HA08AB-A6F**
	Cubicle type (C)			**HA08AC-A6F**
	Portable type (P)			**HA08AP-A6F**
12.5 kA	Board type (B)	Manual spring (H)		**HA12AB-H6F**
	Cubicle type (C)			**HA12AC-H6F**
	Portable type (P)			**HA12AP-H6F**
	Board type (B)	Motor charging spring (A) 100/110 V AC/DC		**HA12AB-A6F**
	Cubicle type (C)			**HA12AC-A6F**
	Portable type (P)			**HA12AP-A6F**
8 kA	Board type (B)	Manual spring (H)	Shunt tripping method 100/110 V DC	**HA08AB-H7F**
	Cubicle type (C)			**HA08AC-H7F**
	Portable type (P)			**HA08AP-H7F**
	Board type (B)	Motor charging spring (A) 100/110 V AC/DC		**HA08AB-A7F**
	Cubicle type (C)			**HA08AC-A7F**
	Portable type (P)			**HA08AP-A7F**
12.5 kA	Board type (B)	Manual spring (H)		**HA12AB-H7F**
	Cubicle type (C)			**HA12AC-H7F**
	Portable type (P)			**HA12AP-H7F**
	Board type (B)	Motor charging spring (A) 100/110 V AC/DC		**HA12AB-A7F**
	Cubicle type (C)			**HA12AC-A7F**
	Portable type (P)			**HA12AP-A7F**

Special specification		Type symbol	Type
Low surge valve		L	**HA□-□L**
Rated operating current	Small current type (8 to 80 A)	S	**HA□-□S**
Equipped with current measurement function (built-in meter)		M1	**HA□-□M1**
Equipped with current measurement function (separately installed meter)		M2	**HA□-□M2**

(Note 1) The installation method, operation method, and tripping method can be freely combined. For non-standard models, specify by indicating the type.

(Note 2) Refer to the section on designated accessories on page E2-34 for details on meter specifications.

New-AUTO.V

■ Description

The New-AUTO.V is a circuit breaker that consists of a standard MULTI.VCB provided with a CT (current transformer), and incorporates a multiple function protectors and controllers to prevent equipment from overcurrent and other factors, thus saving energy and reducing installation man-hour.

- Multiple function protectors and controllers offers versatile features such as ground-fault directional, ground-fault overvoltage, undervoltage, and overvoltage protective functions in addition to overcurrent protection. It also includes measurement functions for a variety of items, such as current, voltage, power, power-factor, frequency, and zero-phase voltage values.

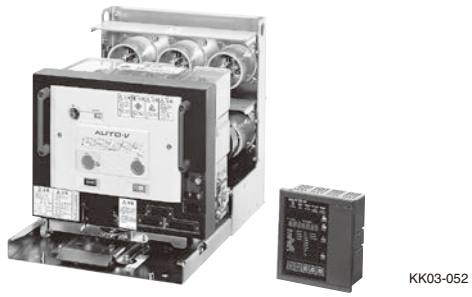

Draw-out type MW or PW (Y type) **Multiple function protectors and controllers**

■ Highly reliable overcurrent protection

- Withstand overcurrent of CT: 12.5kA
- Overcurrent constant of CT: n>20

■ Specifications

Type		HA08A□–A8	HA12A□–A8
Closing system		Motor-spring	
Installation □		Draw-out: X, Y, U	
Rated voltage (kV)		3.6/7.2	
Rated current (A)		400	600
Rated frequency (Hz)		50/60	
Rated breaking capacity (kA)		8 50MVA at 3.6kV 100MVA at 7.2kV	12.5 80MVA at 3.6kV 160MVA at 7.2kV
Rated making current, peak value (kA)		20	31.5
Rated closing time (s)		0.03	
Rated short-time current, 1 second (kA)		8	12.5
Insulation level		Dielectric: 22kV, 1 minute Impulse (1.2 x 50μs): 60kV	
Rated breaking time		3-cycle	
Opening time (s)		0.03	
Operating duty		0 — 1 min. — CO — 3 min. — CO or CO — 15 sec. — CO	
Life expectancy	Mechanical (operations) Electrical (operations)	10,000 10,000	
No. of operations (operations/hour)		60	
Applicable capacitor capacity *1 (kVA)		3,000	5,000
Auxiliary contact		5NO + 5NC	
Mass (kg)	Draw-out (X type) Cradle for X type	34 11	35 11
Standard		H.V. circuit breaker: JIS C 4603 (1990), AC circuit breaker: JEC 2300 (1998)	

Note: *1 Maximum values when the VCB is used with a 6% reactor connected in a 6.6kV AC circuit.
Halve these values for a 3.3kV AC circuit.

■ Specifications (Multiple function protectors and controllers)

Item				Specification
General specification	Control power supply [V]			100/110DC (80 to 143DC) or 100AC (85 to 132AC)
	Power consumption (main unit) [W]			15W max.
	Rated frequency [Hz]			50/60 (settings selectable)
	Rated current		CT primary side [A]	30/100/300 AC (selectable)
			CT secondary side [A]	0.1 AC
	Rated zero-phase current		ZCT [mA]	200/0.2 AC *1
	Insulation resistance			10MΩ between all electric circuits and ground
	Vibration resistance			1.96m/s^2, 16.7Hz, 0.4mm double amplitude in three directions for 10 minutes each
	Shock resistance			300m/s^2 three times each in three directions
	Dielectric strength			2kV AC between all charged parts and ground excluding MN signal line, RS-485 signal line, and transducer output terminal.*2
	Noise immunity			Damped vibration waveform at 1 to 1.5MHz with peak voltage of 2.5 to 3kV continuously applied for 2 seconds Impulse noise in rectangular waveform (1ns/1μs) at peak voltage of 1.5kV applied for 10 minutes Radiowave freguency band: 10V/m on 140MHz, 430MHz, and 900MHz bands Cellular phone (800MHz/1.5GHz at 0.8W) or PHS (1.9GHz 10mW) in close contact
	Static electric noise			In contact with metal part: ±6kV Panel surface (not in contact with no metal parts): ±8kV
	Lightning impulse			Between all electric circuits and ground (excluding MN signal line, RS-485 signal line, and transducer output terminal) 4.5kV, 1.2x50μs, three times each on positive and negative sides
	Ambient humidity			10˚C to 60˚C (with no condensation or icing)
	Storage temperature			-20˚C to +70˚C (with no condensation or icing)
	Humidity			20% to 90% (on daily average with no condensation)
	Operating atmosphere			Free from corrosive gas and excessive dust
	Grounding			Ground at a resistance of 100Ω or less
	Mass			1.4kg
	Permissible momentary power interruption time			20ms (continuous operation) with display turned off The protective relay is, however, operable for 200ms after the power is interrupted.*3 (Display turns off, communication stops, and fault output turns on)
Protective function	Overcurrent protection	Rated operation current (51) setting range		15 to 390A
	Instantaneous overcurrent protection 50	Rated trip current	Setting range	(1 to 20) × rated current (in 0.2 increments), LOCK
			Operating value	±15% max. of each setting current
		Operating (INST)	Operating value time	0.05s max. at 200% of setting current
	Short-time overcurrent protection 51DT	Rated trip current	Setting range	(1 to 20) × rated current (in 0.2 increments), LOCK
			Operating value	±10% max. of each setting current
		Operating time	Setting range	0 to 5s (at 0.05 increments)
			Operating value	±17% max. of 300% of setting value, ±12% max. of 700% of setting value (Lower limit: ±50ms)
	Time-lag overcurrent protection 51	Rated trip current	Setting range	50 to 130% of rated current (at 10% increments), LOCK
			Operating value	±10% max. of each setting current
		Operating time	Time-magnification (lever) setting range	(0.5 to 20) × (in 0.1 increments), (20 to 100) × (in 1 increments)
			Operating value	±17% max. of 300% of setting value, ±12% max. of 700% of setting value (Lower limit: ±100ms)
	Ground fault protection 67DG and 51G	Zero-phase current	Setting range	0.1 to 1.0A (at 0.05A increments), LOCK
			Operating value	±10% max. of setting value
		Zero-phase voltage	Setting range	2.5% to 15% of rated voltage (at 2.5% increments)
			Operating value	±25% max. of setting value
		Phase	Max. sensitivity	30, 45, 60˚
			Operating angle range	Max. sensitivity phase: ±80˚
			Operating angle tolerance	±15%
		Operating time	Setting range	0.1 to 3s (at 0.05s increments), 3 to 120s (at 1s increments)
			Operating value	±5% max. of setting value (Lower limit: ±50ms)

Protective function	Overvoltage protection 59(OV)	Voltage	Setting range	110 to 150V (at 5V increments), LOCK	
			Operating value	±5% max. of setting value	
		Operating time	Setting range	0.1, 0.2 to 2s (at 0.2s increments), 2 to 10s (at 1s increments)	
			Operating value	±5% max. of setting value (Lower limit: ±50ms)	
	Undervoltage protection 27 (UV)	Voltage	Setting range	20 to 100V (at 5V increments), LOCK	
			Operating value	Setting value of 90V min.: ±5% Setting value of 85V max.: ±[{2.3 +(110V/voltage setting value)x 0.16}x 2]%	
		Operating time	Setting range	0.1, 0.2 to 2s (at 0.2s increments), 2 to 10s (at 1s increments)	
			Operating value	±5% max. of setting value (Lower limit: ±50ms)	
Prealarm	Overcurrent OCA	Voltage	Setting range	10% to 100% of rated current (at 5% increments), LOCK	
			Operating value	±10% max. of setting value	
		Operating time	Setting range	10 to 200s (at 10s increments)	
			Operating value	±5% max. of setting value	
	Leakage current OCGA	Voltage	Setting range	50%, 60%, 70%, and 80% of 67DG or 51G operating current setting value, Lock	
			Operating value	±10% max. of setting value (Lower limit: ±20mA)	
		Operating time	Setting range	10 to 200s (at 10s intervals)	
			Operating value	±5% max. of setting value	
External I/O specifications	Input circuit	Fixed, 5 points		CT primary rated current (30A/100A/300A): 3 points, CT test position: 1 point, trip output lock: 1 point	100V DC (143V max.)/100V AC (132V max.) common use DC ON voltage: 40V min, 70V max. AC ON voltage: 40V min, 70V max.
		General-purpose, 3 points		External making, external breaking and external reset of each one point is default.	
		Others, 2 points		Trip coil (TC) disconnection monitoring, 52a contact: each one contact	
	Output circuit	Input, 1 point		Making earrent: 15 A (110V DC) Permissible continuous current: 4A	
		Off and trip, 1 point			
		Alarm output, 8 points		Current made or broken: 0.2 A (110V DC inductive load, L/R=15ms) Permissible continuous current: 1A	
		Device failure, 1 point			
Metering and display specifications	Current, demand current and demand max. current			0, 0.4% to CT rating and to CT rating x 1.3 Fault current of 2000% max. can be displayed	
	Zero-phase current and zero-phase current history max. value		200/0.2mA	ZCT primary current: 0.05 to 1.0A *1 Fault current of 4A max. can be displayed	
	Zero-phase voltage and zero-phase voltage history max. value			1.5% to 50% *4	
	Voltage			5 to 150V on VT secondary side	
	Frequency			45 to 55Hz (50Hz) and 55 to 65Hz (60Hz)	
	Power-factor			Lead 0 to 1.0 to Lag 0	
	Active power, reactive power, demand power and max. demand power			0, 0.4% to ($\sqrt{3}$ x rated voltage x 1.3In x power-factor 1.0) % (In: CT primary rated current)	
	Active energy and reactive energy			JIS C 1216 (meter with transformer), equivalent to table 4 normal class	
	History data			Number of protective operation times: 0 to 9999 Operating hours: 0 to 9999 x 100 hr Number of switching times: 0 to 9999 x 10 times	

Notes *1 When using ZCT, FUJI's dedicated product ZCT-□ is recommended. For details, please contact FUJI.
*2 Do not apply 2kV between lines.
*3 When you use AC power as control power supply, and 27 (UV) function, and you require that the operating time setting at power failure be operated more than 2s, the use of a UPS or AC power supply UM2P-A1 is recommended (sold separately).
*4 When you use zero-phase potential input device, use FUJI's dedicated ZPD-2.

Vacuum circuit breakers
New-AUTO.V

■ Multiple function protectors and controllers offers versatile features.

● **A host of protective functions**
- Provided with ground-fault directional, ground-fault overvoltage, undervoltage, and overvoltage protective functions in addition to overcurrent protection.
- Allows precise settings for relay operation characteristics, to ensure easy protective coordination.

● **Additional measurement functions**
- Includes measurement functions for a variety of items, such as current, voltage, power, power-factor, frequency, and zero-phase voltage values.

● **Equipped with transducer and communications functions.**
- The transducer function (4 channels) enables the use of analog meters.
- The communications function (RS-485) enables status and other monitoring items.

■ Wide-range CT supports equipment across a wide capacity range

- Range of operating current settings for overcurrent protection: 15 to 390A
- Covers an equipment capacity range of 170 to 4,400kVA.

Rated operating current (A)

CT rating	50%	60%	70%	80%	90%	100%	110%	120%	130%
30A	15A	18A	21A	24A	27A	30A	33A	36A	39A
100A	50A	60A	70A	80A	90A	100A	110A	120A	130A
300A	150A	180A	210A	240A	270A	300A	330A	360A	390A

- Instantaneous operating current: 1x to 20x CT rated current (at 0.2x increments)
- Time-lag time-magnification: Setting between 0.5 and 100

■ Greatly simplifies main circuit connections

- The compact, built-in CT eliminates the need for CT space or CT installation work on distribution boards.

Draw-out type MW or PW (Y type)

Multiple function protectors and controllers KK03-061

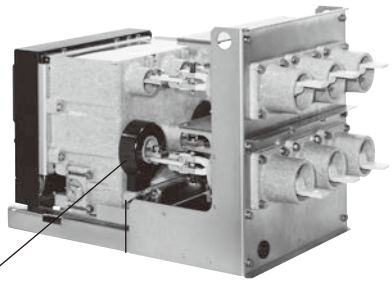

Toroidal wide-range CT KK03-051

■ Types and ratings

Ratings	Installation	Closing system Closing system	Operating voltage	Trip system	Type
Voltage 3.6/7.2kV Breaking current 8.0kA Rated current 400A	Draw-out with cradle: X Draw-out with cradle and shutter: Y Draw-out with cradle: U	Motor-spring Instantaneous	100/110V AC/DC	Shunt trip (Operated by signal communication with multiple function protections and controllers) 100/110V DC	**HA08AX-A8** **HA08AY-A8** **AH08AU-A8**
Voltage 3.6/7.2kV Breaking current 12.5kA Rated current 600A	Draw-out with cradle: X Draw-out with cradle and shutter: Y Draw-out with cradle: U	Motor-spring Instantaneous	100/110V AC/DC	Shunt trip (Operated by signal communication with multiple function protections and controllers) 100/110V DC	**HA12AX-A8** **HA12AY-A8** **AH12AU-A8**

■ Closing system

System		Specification			Remarks
		Voltage	Motor current	Coil current	
Motor-spring	A	100/110V AC/DC	0.6A	4A(DC), 5.6A(AC)	• Use a VT with a capacity of at least 50VA. • Use a 3A fuse to protect the control circuit • Spring charging time is 5 seconds.
	B	200/220V AC/DC	0.5A	2.5A(DC), 3.5A(AC)	
	C	48V DC	1.5A	5.5A	
	D	21/24V DC	3.0A	12A(DC/AC)	

Note: The New-AUTO.V comes only with motor-spring A.

■ Tripping system

	System		Specification
AUTO.V *1;*2	Shunt trip	6	100/110V AC, 20VA
		7	100/110V DC, 3.9A
New-AUTO.V *2	Shunt trip	8	100/110V DC, 3.4A Operated by signal communication with multiple function protectors and controller

■ Auxiliary contact

Contact arrangement	Specification	Remark
2NO + 2NC standard provided (Fixed type) 5NO + 5NC standard provided (Draw-out type)	100/200V AC, 10A 100/200V DC, 5/3A	5NO + 5NC contacts are available on request (Fixed type)

Note: *1 To use AC to trip the AUTO.V, use a capacitor trip device in combination with the trip system.
*2 In the case of shunt tripping with AC power supply, use the capacitor shunt trip power supply in combination. For details, refer to the information on the accessories sold separately.

■ Alarm contact

Contact arrangement	Specification
1NO standard provided (AUTO.V)	100/110V AC, 2.0A 200/220V AC, 1.0A 100/110V DC, 0.3A (time constant: 7ms)

■ Type number nomenclature

● AUTO.V

HA 08 A B - A 6 S L

Basic type

Breaking current
08: 8kA (Rated current 400A)
12: 12.5kA (Rated current 600A)

Installation
B: Fixed, switchboard use
C: Fixed, cubicle use
P: Fixed, portable type

Vacuum interrupter used
Blank: Standard level vacuum interrupter
L: Low-level-surge vacuum interrupter

Rated operating current
F: 24 to 320A (standard)
S: 8 to 80A

Tripping system
6: Shunt trip 100/110V AC
7: Shunt trip 100/110V DC

Closing system
H: Manual-spring
A: Motor-spring, Instantaneous closing 100/110V AC/DC
B: Motor-spring, Instantaneous closing 200/220V AC/DC
C: Motor-spring, Instantaneous closing 48V DC
D: Motor-spring, Instantaneous closing 21/24V DC

● New-AUTO.V

HA 08 A X - A 8 L S1 K

Basic type

Breaking current
08: 8kA(Rated current 400A)
12: 12.5kA(Rated current 600A)

Installation
X: Draw-out, with cradle for JEM 1425 class CW
Y: Draw-out, with cradle and shutter for JEM 1425 class MW and PW
U: For use in small depth switchboard, JEM1425 class CW

Panel lead wire
Blank: With panel lead wire
K: Plug only

Position switch
Blank: With no position switch
S1: With run position and test position, both with SPDT contacts

Vacuum interrupter used
Blank: Standard level vacuum interrupter
L: Low-level-surge vacuum interrupter

Tripping system
8: Multiple function protectors and controllers provided with built-in CT
Shunt trip 100/110V DC

Closing system
A: Motor-spring, Instantaneous closing 100/110V AC/DC

Vacuum circuit breakers AUTO.V/New-AUTO.V

■ Installation and accessories

	Photo	Installation system	Description	Supplied accessories	Optional accessories
AUTO.V	KKD14-102	Fixed: B 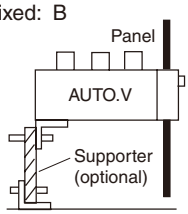	• Fixed type • Open-type switchboard, indoor use • Manual-spring handle or motor-spring • M.V. main terminals are positioned at the top of the VCB. This facilitates replacement of VCB	• Insulation tube for main terminal • Manual handle for motor-spring type	• Supporter • Capacitor trip device • Vacuum condition tester • Surge absorber
	No Photo	Fixed: C 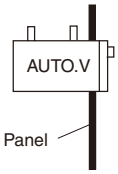	• Fixed type • Open-type cubicle use • Manual-spring handle or motor-spring • M.V. main terminals is located at the top of VCB. This facilitates replacement of VCB.	• Insulation tube for main terminal • Manual handle for motor-spring type	• Supporter • Capacitor trip device • Vacuum condition tester • Surge absorber
	No Photo	Fixed: P 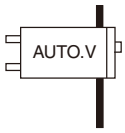	• Fixed type • Open-type, portable type • Manual-spring handle or motor-spring • M.V. main terminals is located at the back of VCB. This facilitates replacement of VCB.	• Manual handle for motor-spring type	• Capacitor trip device • Vacuum condition tester • Surge absorber
New-AUTO.V	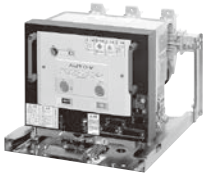 KK03-055	Draw-out with cradle: X 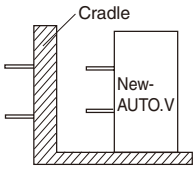	• Draw-out type • Class CW type metal enclosure/indoor use • Motor-spring • Cradle is provided to facilitate assembly and adjustment of switchgear. • Interlock system and grounding device is provided.	• Manual handle for motor-spring type • Draw-out handle • Connector provided with external lead wire • Lead wire for digital multi-function relay • Test jumper wire for digital multi-function relay	• Draw-out extension rail • Position indicating switch • Capacitor trip device • Vacuum condition tester • Surge absorber • Lifter • Testing jumper • Connector with external lead wire
	KK03-050	Draw-out with cradle and shutter: Y 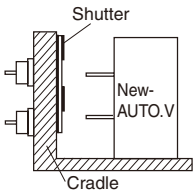	• Draw-out type • Class MW, PW type metal enclosure/indoor use • Motor-spring • Cradle with shutter is provided to facilitate assembly and adjustme nt of switchgear. • Interlock system and grounding device is provided.	• Manual handle for motor-spring type • Draw-out handle • Connector provided with external lead wire • Lead wire for digital multi-function relay • Test jumper wire for digital multi-function relay	• Draw-out extension rail • Position indicating switch • Capacitor trip device • Vacuum condition tester • Surge absorber • Lifter • Testing jumper • Connector with external lead wire
	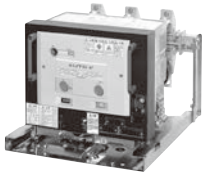 KK03-056	Draw-out with cradle: U 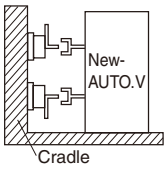	• Draw-out type • Class CW type metal enclosure/indoor use • Motor-spring • Cradle with shutter is provided to facilitate assembly and adjustme nt of switchgear. • Interlock system and grounding device is provided.	• Manual handle for motor-spring type • Draw-out handle • Connector provided with external lead wire • Lead wire for digital multi-function relay • Test jumper wire for digital multi-function relay	• Draw-out extension rail • Position indicating switch • Capacitor trip device • Vacuum condition tester • Surge absorber • Lifter • Testing jumper • Connector with external ead wire

■ Supplied accessories

● **Insulation tube for main terminal**
Installation types: B and C

AF88-1108

● **Manual handle for motor-spring type**
All types

KK03-073

● **Draw-out handle**
Installation types: X, Y, and U

KK03-074

• Connector with external lead wire
Installation types: X, Y and U

KK03-075

• Lead wire for multiplefunction protectors and controllers
New-AUTO.V type

KK03-076

• Jumper wire for digital multi-function relay test
New-AUTO.V type

K03K-077

■ Optional accessories

● **Supporter**
Supporter kit for stabilizing the back of fixed type B, C AUTO.V on the floor.

Type: C

Type: B

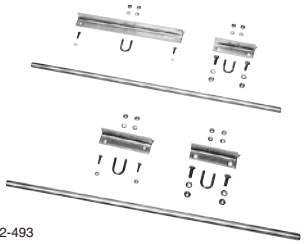

AF92-493

● **Draw-out extension rail** (HZ2AE)
Used with draw-out type (X, Y, U).
Use of an extension rail makes daily checking easier because the VCB can be pulled out of the panel.
Double stack types do not require lifters or chain blocks.

KK03-079

● **Position indicating switch** (HZ2AD)
Switch for indicating the service positions and test positions of draw-out (X, Y, U).
Used for interlocking to other devices attached to the cradle for draw-out type.

SG 1075

● **Vacuum condition tester**
VC-1A
For further information see page E2-23.

KKD17-062

● **C-R type surge absorber**
AF3320R3TC5R
AF6620R3TC5R
For further information see page E2-23.

● **Testing jumper** (HZ2AG)
Use to test remote ON/OFF operation of a VCB.

KK03-078

● **Arrester**
GLI-3G
GLI-6G

AF94-104

● **Capacitor trip device**
VCB-T1A, T2A, VCB-T1PA, T2PA
These are used when the trip circuit is connected to AC power supply.

Type	VCB-T1A VCB-T1PA	VCB-T2A VCB-T2PA
Rated input voltage	100/110V AC	200/220V AC
Shunt trip coil volt	100/110V DC	200/220V DC

Surface mounting
VCB-T1A, T2A

KK04-064

Flush mounting
VCB-T1PB, T2PB

VCB-T1PB

● **Lifter**
L-2HNB

KK03-080

Wiring diagram

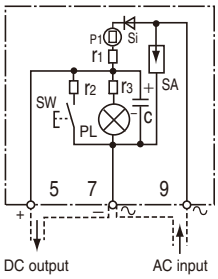

Name
r1: Charging resistor
r2: Discharge resistor
r3: Series resistor
Si: Silicon rectifier diode
PL: Pilot lamp
C: Electrolytic capacitor
SW: Discharge switch
SA: Surge absorber
P1: Thermistor

■ Optional accessories

● AC power supply unit (for New-AUTO.V)

Type		UM2P-A1
Rated input voltage		100/110V AC (Allowable variation: 85 to 132V)
Rated output	Control power of multiple functions protectors and controllers	100/110V DC 0.15A
	Power supply of capacitor trip device	Rated charge voltage: 140V DC (C=1500 μ F)
Power failure compensation time	Control power of multiple functions protectors and controllers	1s
	Power supply of capacitor trip device	When power failure occurs at 60V AC, the charge voltage is 75V DC or higher after the elapse of 30s.
Operating temperature range		-10 to +60˚C (no icing or no condensation)
Insulation resistance		Between all electrical circuits and ground: 10MΩ (500V DC megger)
Withstand voltage		Between all electrical circuits and ground: 2000V AC for 1min
Lightning impulse		Between all electrical circuits and ground: 4500V 1.2/50μs
Mass		1.5kg

Notes: The power failure compensation time of this AC power supply unit is 1s. If you use the UV (undervoltage) function with the operation time at 1.2s or longer, connect an external capacitor (not supplied) together between this unit's terminals 5 and 6, by referring to the table below.

Operating time of protection	External capacitor capacitance 27 (UV)	Example of capacitor
1.2 to 2s (at 0.2s increments)	1500 μ F (Withstand voltage: 200V DC min.)	Nichicon-made LNT2D152MSM
3 to 5s (at 1s increments)	6800 μ F (Withstand voltage: 200V DC min.)	Nichicon-made LNT2D682MSM
6 to 10s (at 1s increments)	1600 × t (μ F)	

t = Operating time (setting value) of protection 27 (UV)

Outline of devices used in combination

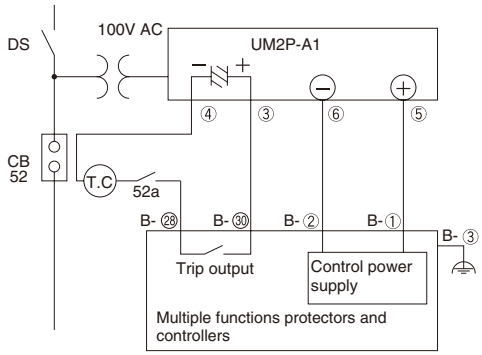

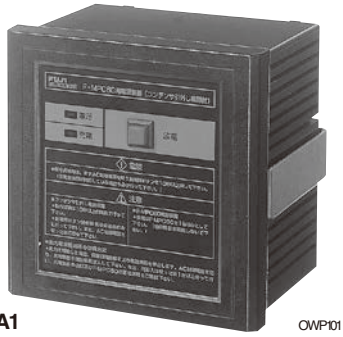

UM2P-A1 OWP101

● Specifications of AC meter (for AUTO.V)

Product	AC meter *1
Type	**FR-80AS** (for AUTO.V)
Operating principle	RMS rectifying type
Standard scale	Normal scale
Full scale [A]	Low ratings: 20, 40, and 100 Standard ratings: 60, 150, and 400 *2
Mass (g)	Approx. 150
Class	2.5 (JIS C 1102)
Dimensions [mm] (Front dimensions)	80 × 80

Note: *1. Specify that the meter is to be used for the AUTO.V when ordering the meter alone.
*2. Set the full scale (A) to a value twice as large as the primary current setting (A) in the built-in OCR. For example, if the primary current of the OCR is 75A, read the full scale of the AC meter as 150A.

FR-80AS AF00-416

■ Dimensions, mm

HA □ AB - H6F, HA □ AB - H7F (Installation: Switchboard use, Manual-spring closing system)

The dimensions for a 5NO+5NC or low-rating auxiliary switch are different, so , please contact us regarding specifications.

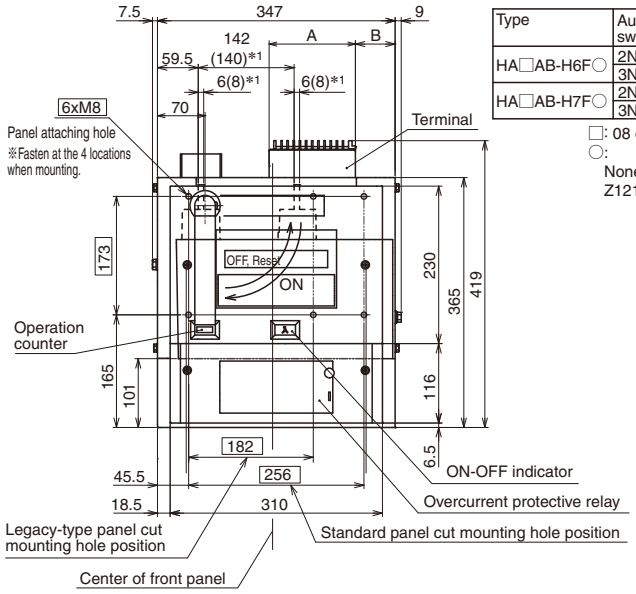

Type	Auxiliary switch	A	B
HA□AB-H6F○	2NO+2NC	126	79.5
	3NO+3NC	176	79.5
HA□AB-H7F○	2NO+2NC	176	79.5
	3NO+3NC	210	52.5

□: 08 or 12
○:
None: 2NO+2NC
Z121: 3NO+3NC

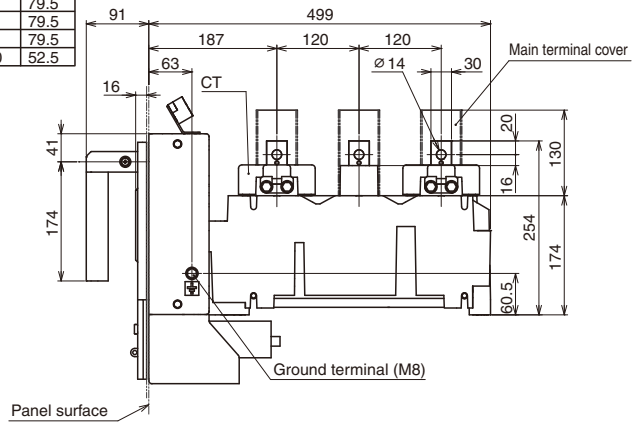

＊1 ( ): For HA12B

・Panel cutting

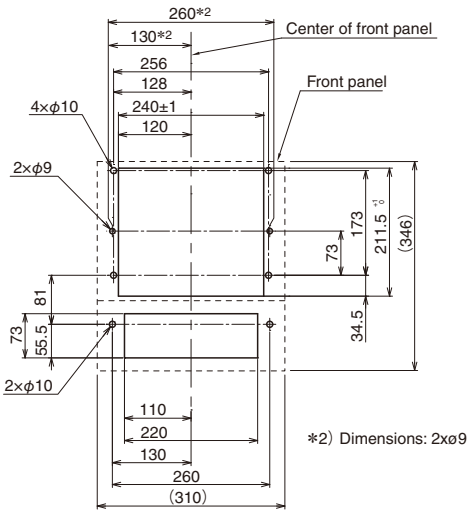

*2) Dimensions: 2xø9

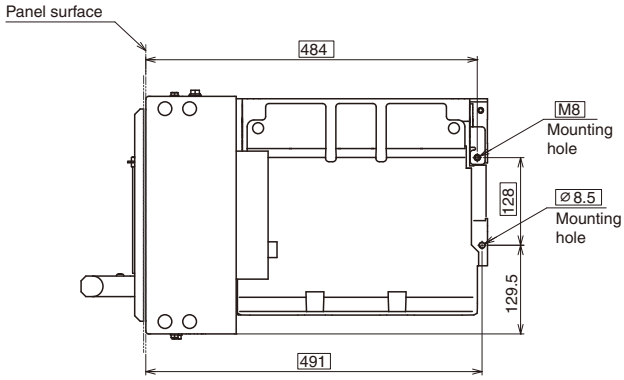

Vacuum circuit breakers
AUTO.V

■ Dimensions, mm

HA □ AB - A6F, HA □ AB - A7F (Installation: Switchboard use, Motor-spring closing system)

The dimensions for a 5NO+5NC or low-rating auxiliary switch are different, so , please contact us regarding specifications.

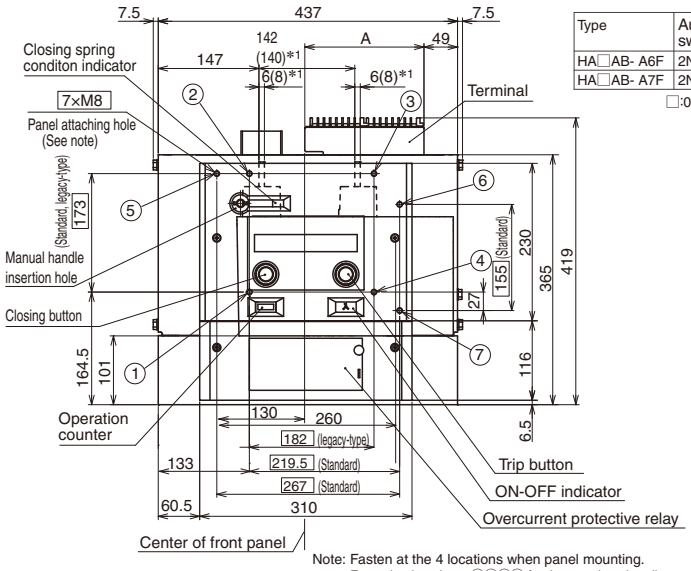

Type	Auxiliary switch	A
HA□AB- A6F	2NO+2NC	174
HA□AB- A7F	2NO+2NC	210

□:08 or 12

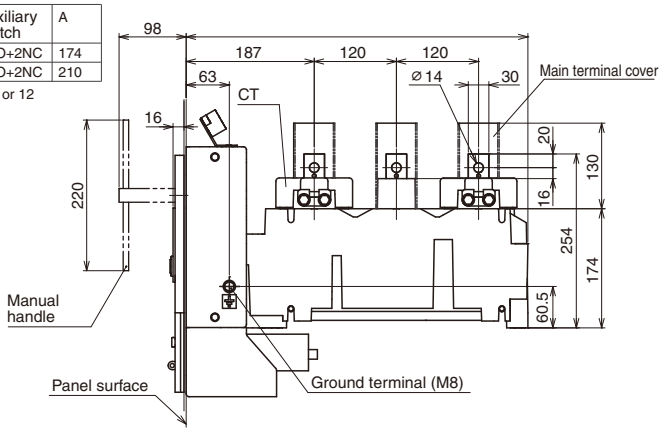

Note: Fasten at the 4 locations when panel mounting.
Fastening locations: ①⑤⑥⑦ for the panel cutting diagram provided below
①②③④ when mounting to legacy-type panels

＊1 ( ): For HA12AB

・Panel cutting

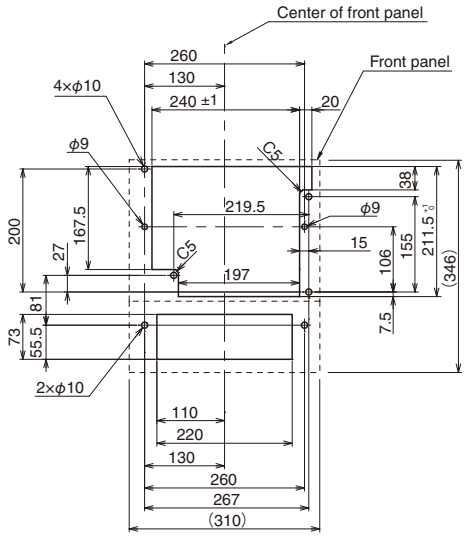

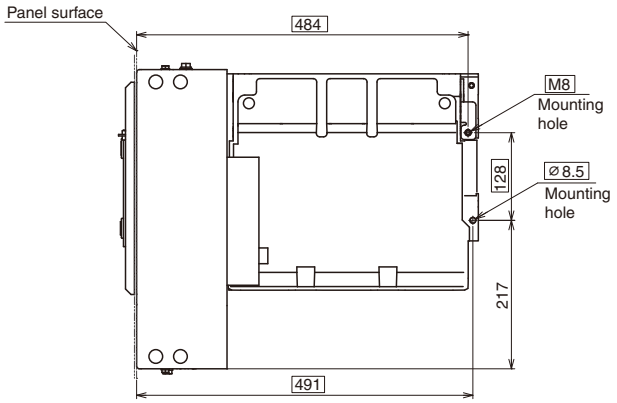

■ Dimensions, mm

HA □ AC - H6F, HA □ AC - H7F (Installation: Cubicle use, Manual-spring closing system)

・The dimensions for a 5NO+5NC auxiliary switch are different, so , please contact us regarding specifications.

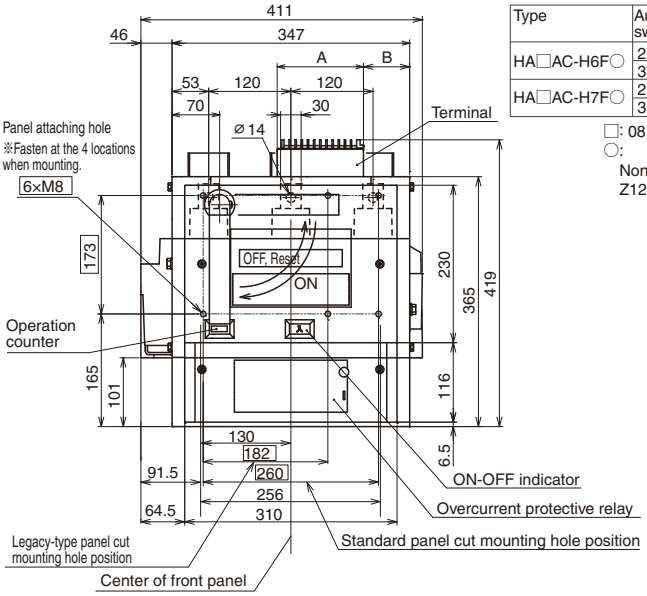

Type	Auxiliary switch	A	B
HA□AC-H6F○	2NO+2NC	126	79.5
	3NO+3NC	176	79.5
HA□AC-H7F○	2NO+2NC	176	79.5
	3NO+3NC	210	52.5

□: 08 or 12
○:
None: 2NO+2NC
Z121: 3NO+3NC

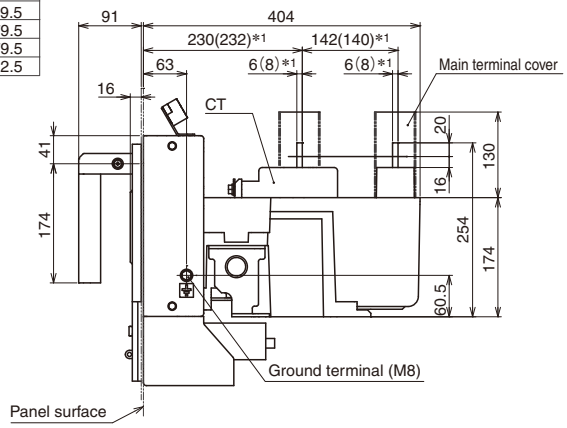

＊1 ( ): For HA12AC

・Panel cutting

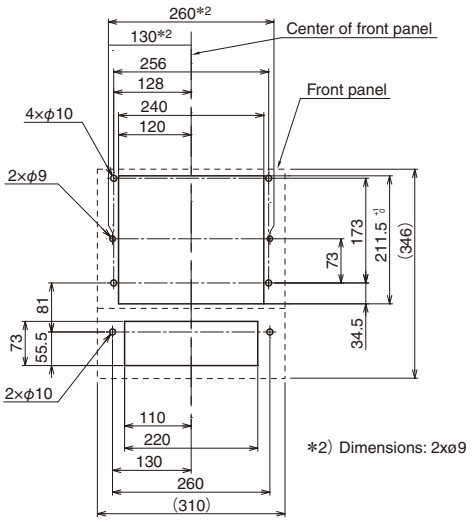

＊2) Dimensions: 2xø9

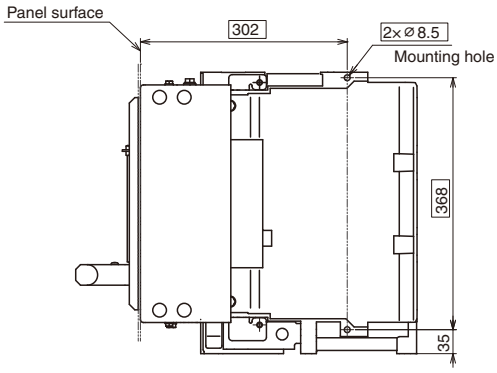

■ Dimensions, mm

HA □ AC - H6F, HA □ AC - H7F (Installation: Cubicle use, Motor-spring closing system)

The dimensions for a 5NO+5NC or low-rating auxiliary switch are different, so , please contact us regarding specifications.

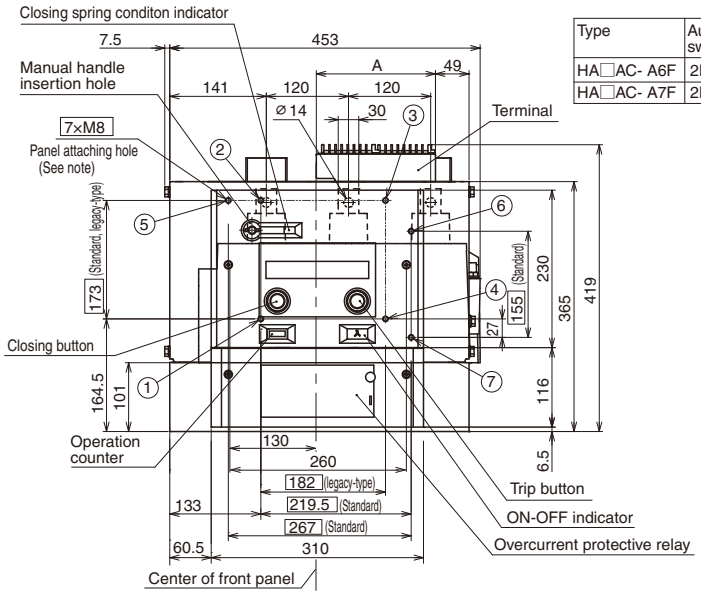

Type	Auxiliary switch	A
HA□AC- A6F	2NO+2NC	174
HA□AC- A7F	2NO+2NC	210

□:08 or 12

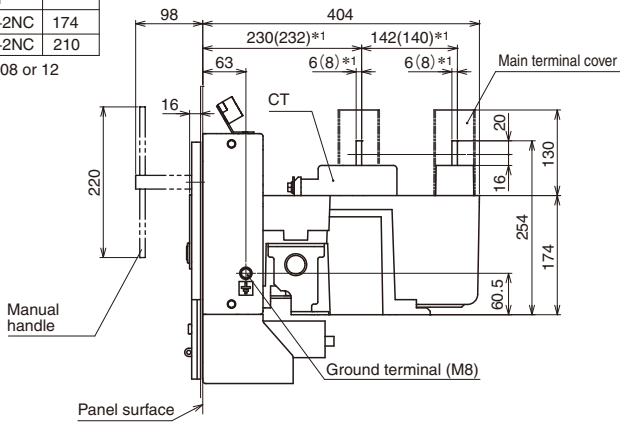

Note: Fasten at the 4 locations when panel mounting.
Fastening locations: ①⑤⑥⑦ for the panel cutting diagram provided below
①②③④ when mounting to legacy-type panels

＊1 ( ): For HA12AC

・Panel cutting

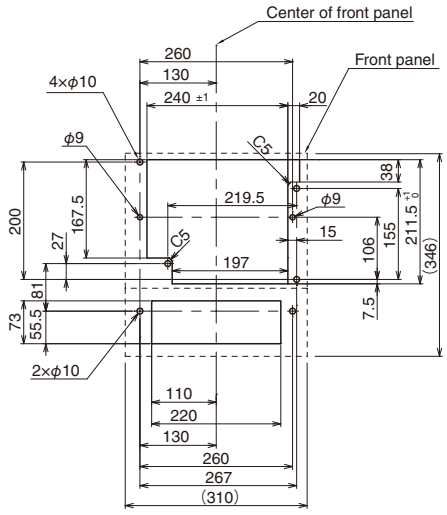

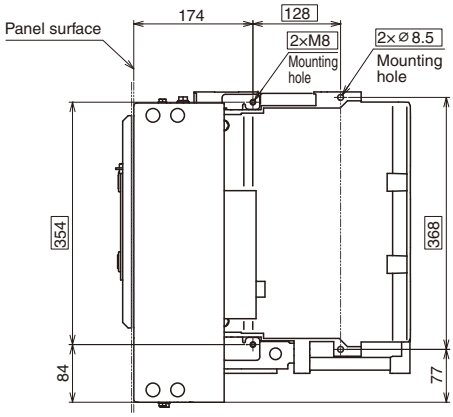

■ Dimensions, mm

HA □ AP - H6F, HA □ AP - H7F (Installation: Portable type, Manual-spring closing system)

The dimensions for a 5NO+5NC or low-rating auxiliary switch are different, so , please contact us regarding specifications.

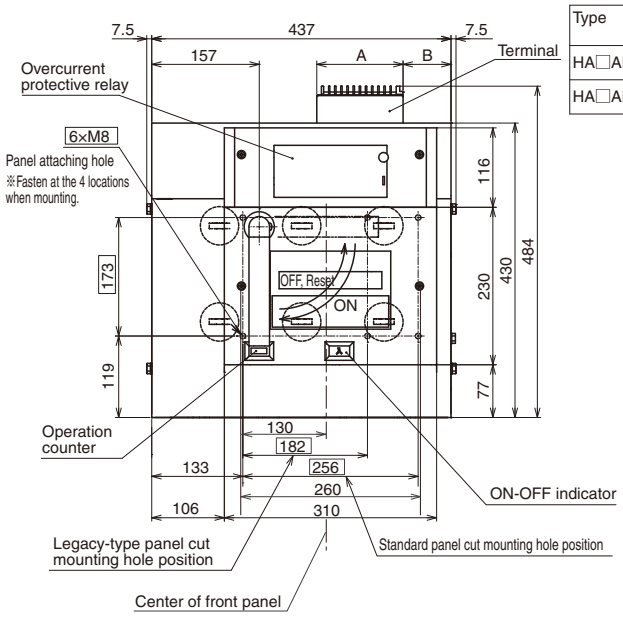

Type	Auxiliary switch	A	B
HA□AP-H6F○	2NO+2NC	126	82
	3NO+3NC	176	82
HA□AP-H7F○	2NO+2NC	176	82
	3NO+3NC	210	55

□: 08 or 12
○:
None: 2NO+2NC
Z121: 3NO+3NC

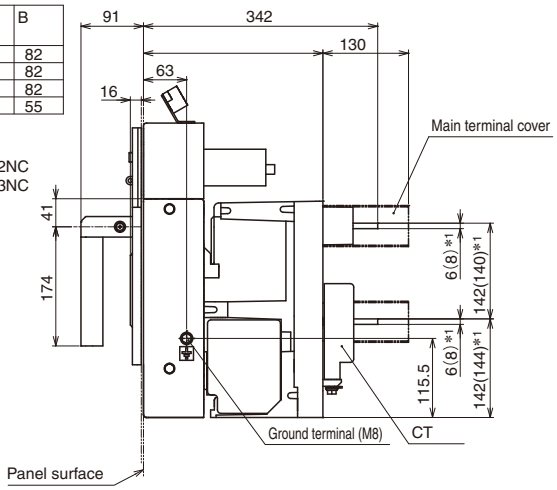

＊1 ( ): For HA12AP

・Panel cutting

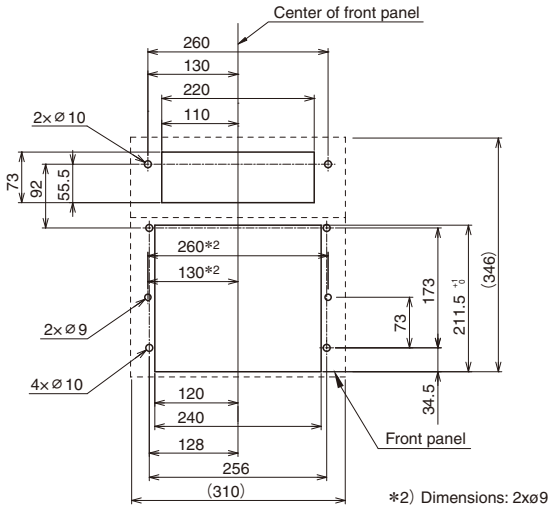

＊2) Dimensions: 2xø9

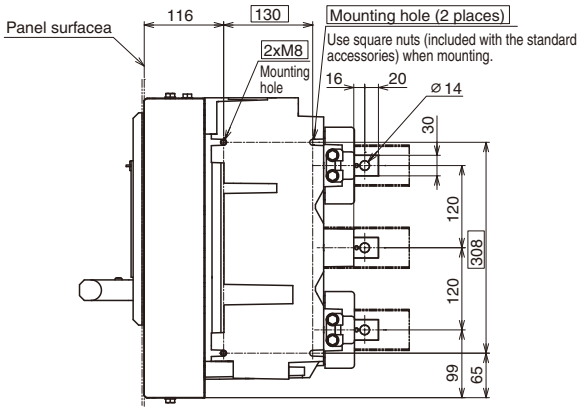

■ Dimensions, mm

HA □ AP - H6F, HA □ AP - H7F (Installation: Portable type, Motor-spring closing system)

The dimensions for a 5NO+5NC or low-rating auxiliary switch are different, so , please contact us regarding specifications.

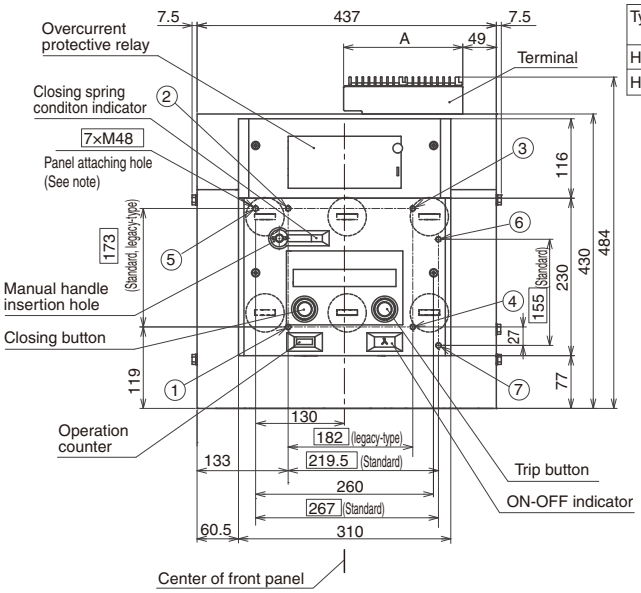

Type	Auxiliary switch	A
HA□AP- A6F	2NO+2NC	174
HA□AP- A7F	2NO+2NC	210

□:08 or 12

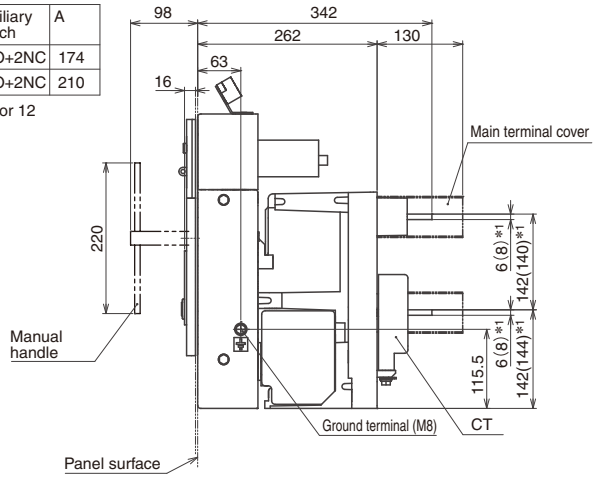

Note: Fasten at the 4 locations when panel mounting.
Fastening locations: ①⑤⑥⑦ for the panel cutting diagram provided below
①②③④ when mounting to legacy-type panels

＊1 ( ): For HA12AP

・Panel cutting

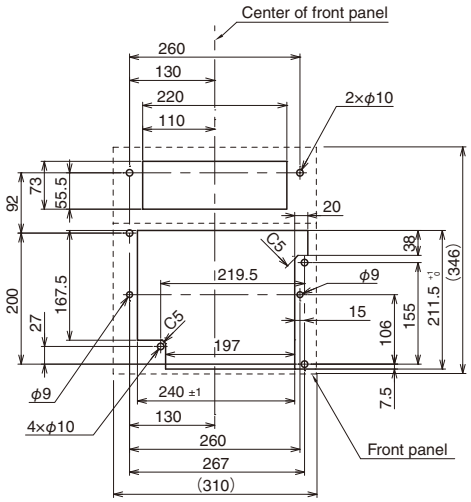

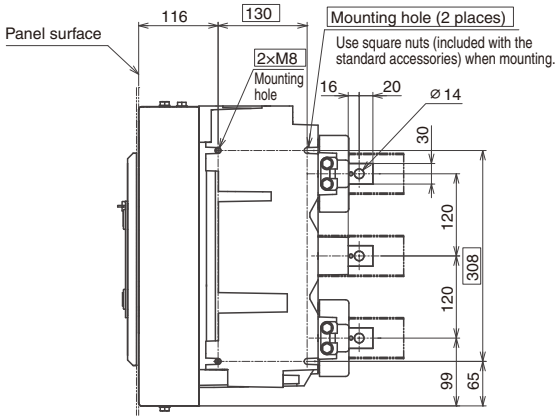

■ Dimensions, mm

AYTO.V equipped with current measurement function HA □ AC - A6FM1

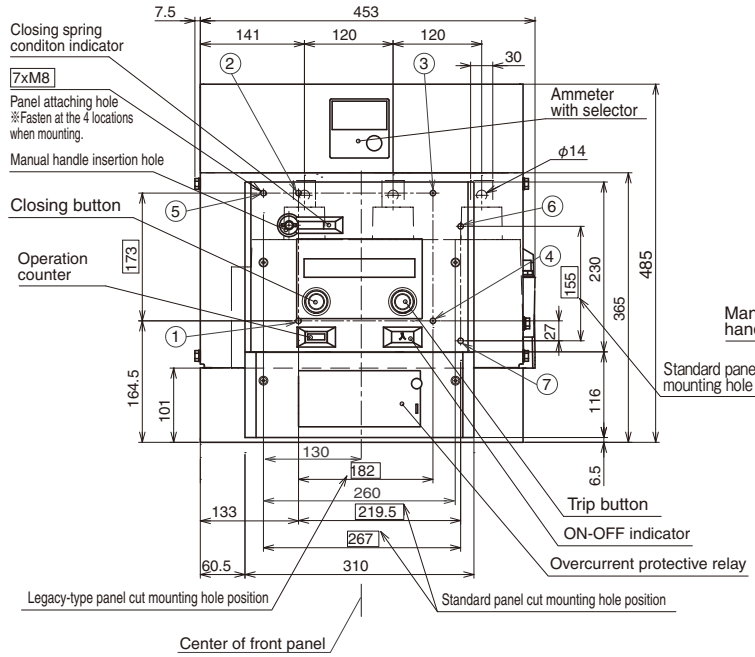

Note: Fasten at the 4 locations when panel mounting.
Fastening locations: ①⑤⑥⑦ for the panel cutting diagram provided below
①②③④ when mounting to legacy-type panels

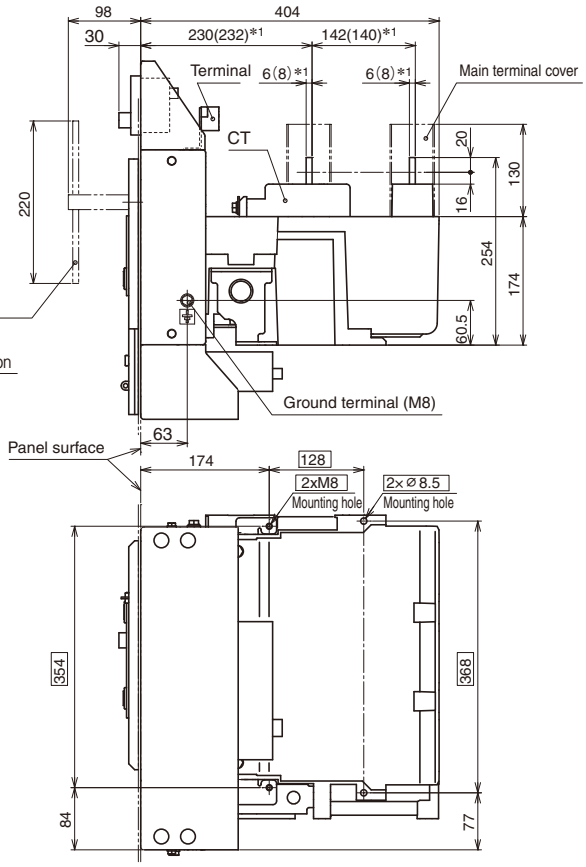

＊1 ( ): For HA12AC

E2

■ Dimensions, mm

HA □ AX - A8 (Installation: Draw-out type (CW), Motor-spring closing system)

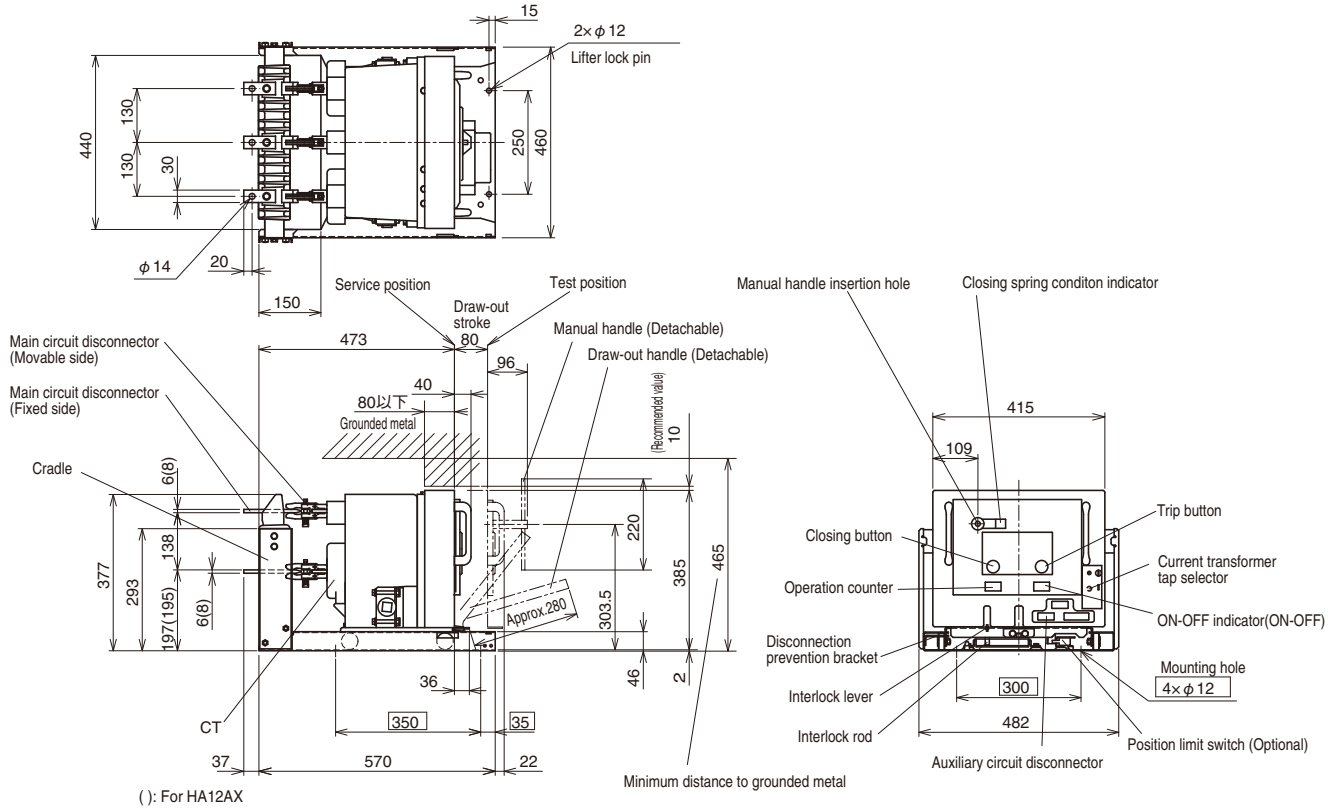

( ): For HA12AX

E2

■ Dimensions, mm

HA □ AY - A8 (Installation: Draw-out type (MW, PW), Motor-spring closing system)

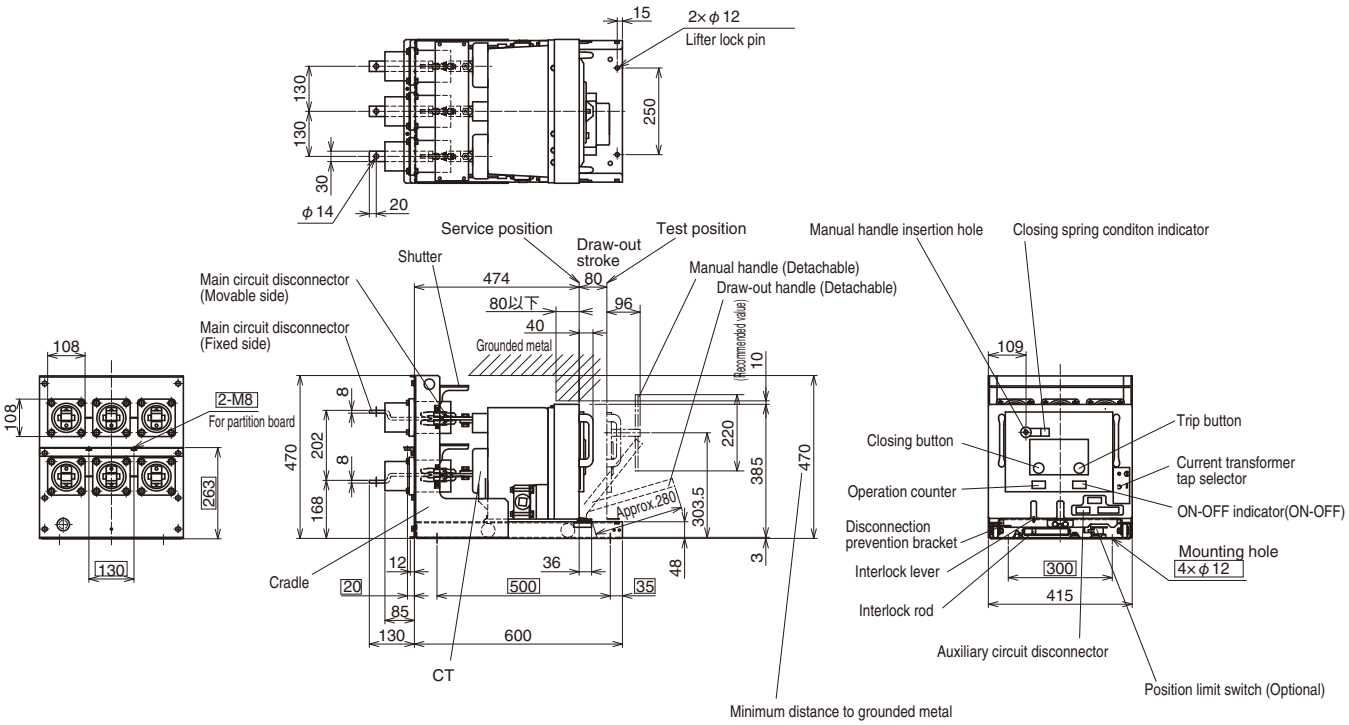

■ Dimensions, mm

HA □ AU - A8 (Installation: Draw-out type (For use in small depth switchboard, CW), Motor-spring closing system)

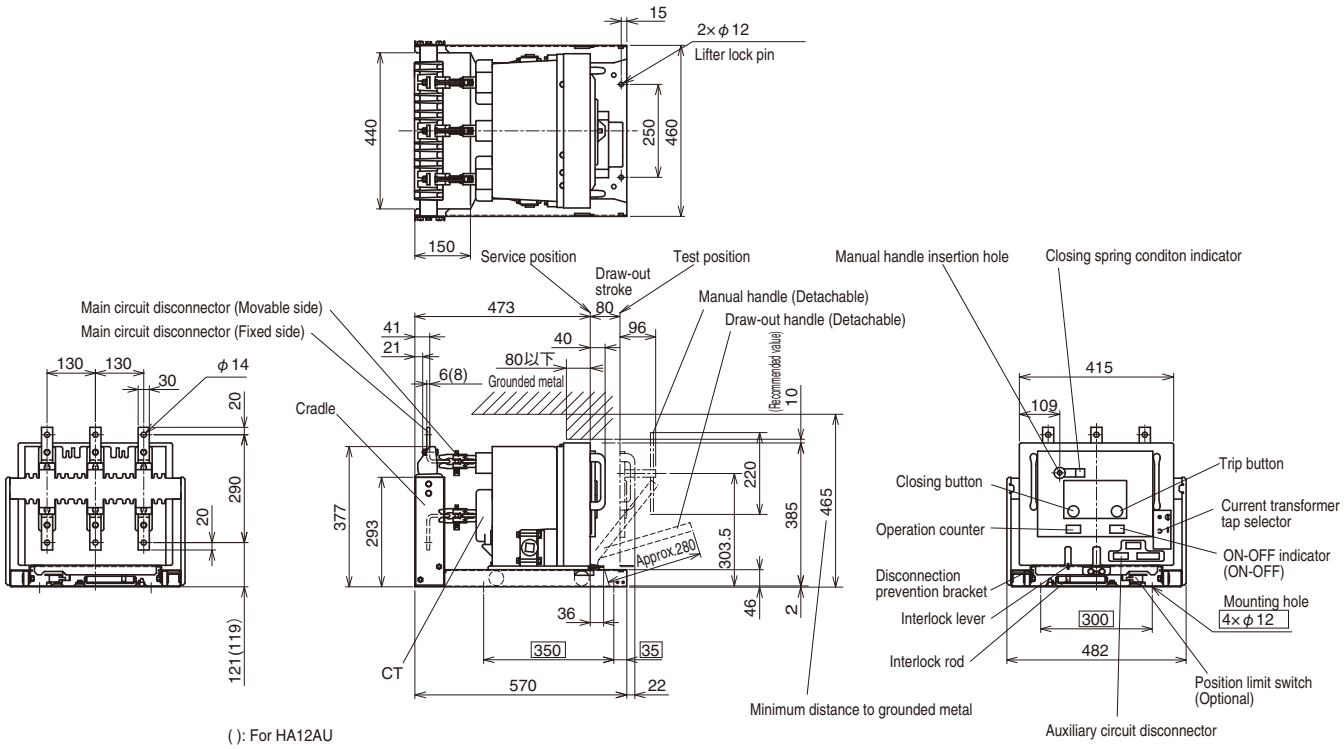

■ Multiple function protectors and controllers

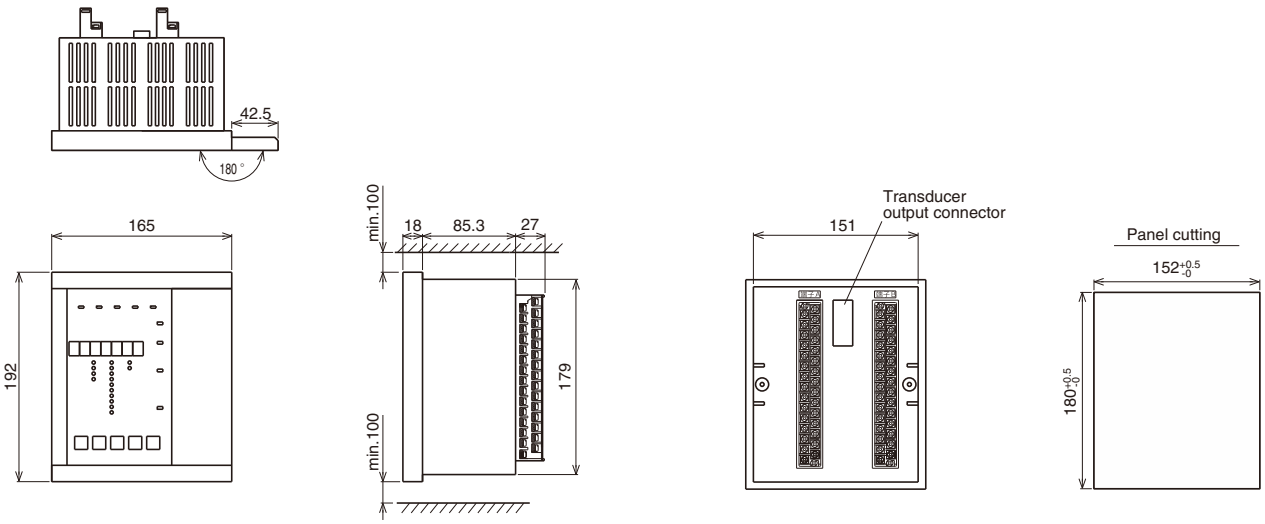

Vacuum circuit breakers AUTO.V/New-AUTO.V

■ Wiring diagrams

Manual-spring closing system (Current trip + Shunt trip 100/110V AC) : AUTO.V

HA □ A □ - H6F, S

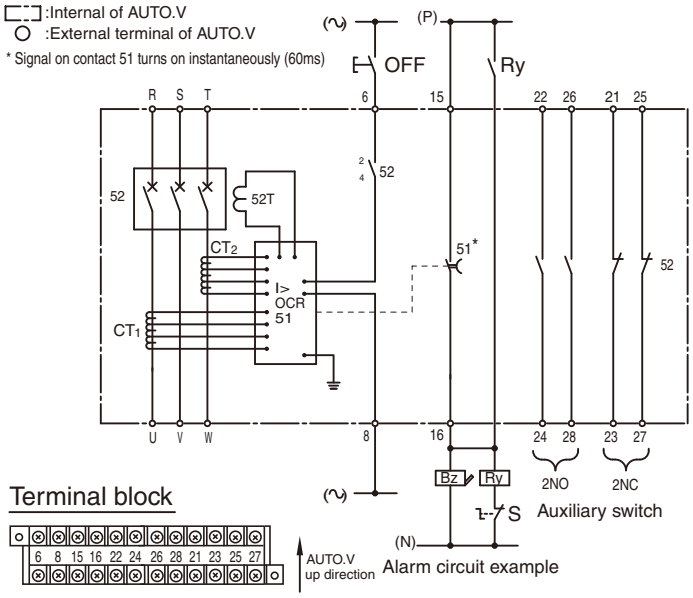

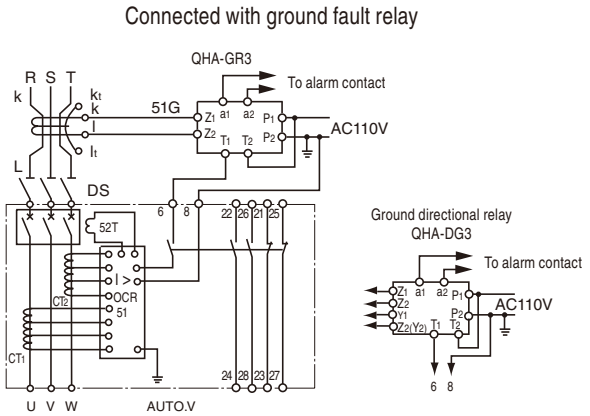

Manual-spring closing system (Shunt trip 100/110V DC) : AUTO.V

HA □ A □ - H7F, S

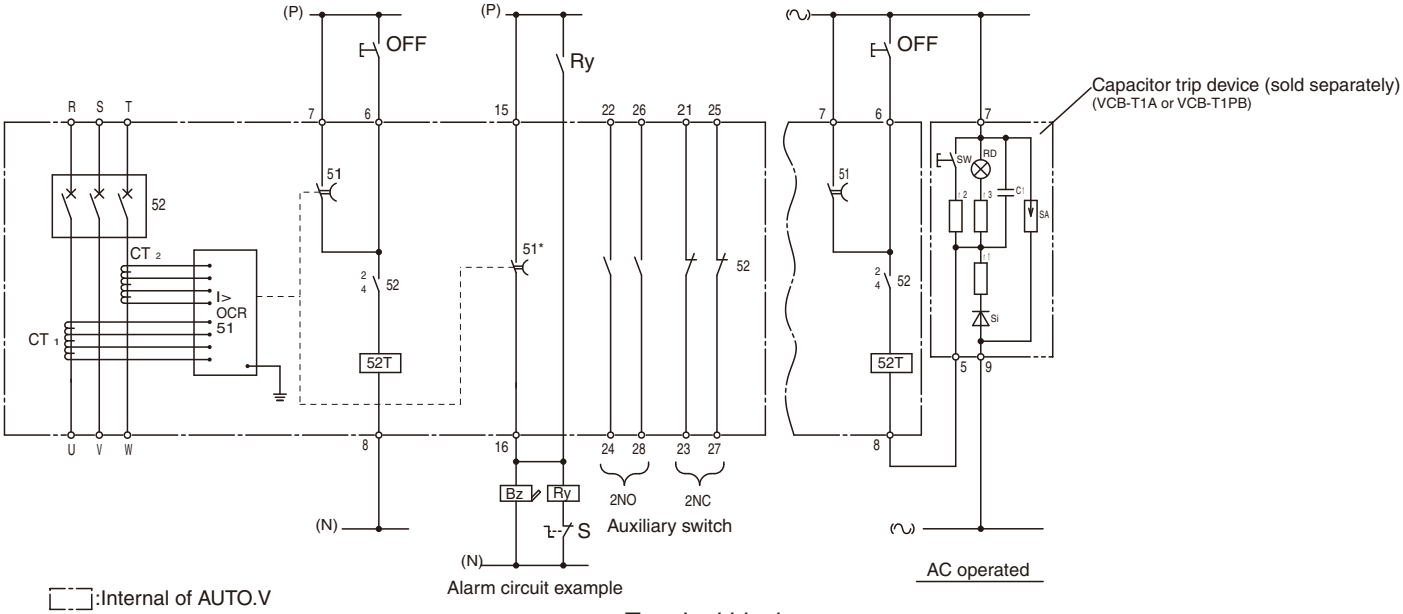

:Internal of AUTO.V

○ :External terminal of AUTO.V

* Signal on contact 51 turns on instantaneously (60ms)

Terminal block

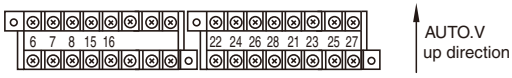

AUTO.V
up direction

52T	: Shunt trip coil	S	: Buzzer stop switch
51OCR	: Overcurrent relay	Ry	: Control relay (HH22 or HH23)
CT_1, CT_2	: Overcurrent detection dedicated current transformer	51G	: Ground fault relay
Bz	: Failure indication buzzer		

■ Wiring diagrams

Motor-spring closing system (Current trip + Shunt trip 100/110V AC) : AUTO.V

HA □□ - A6F, S

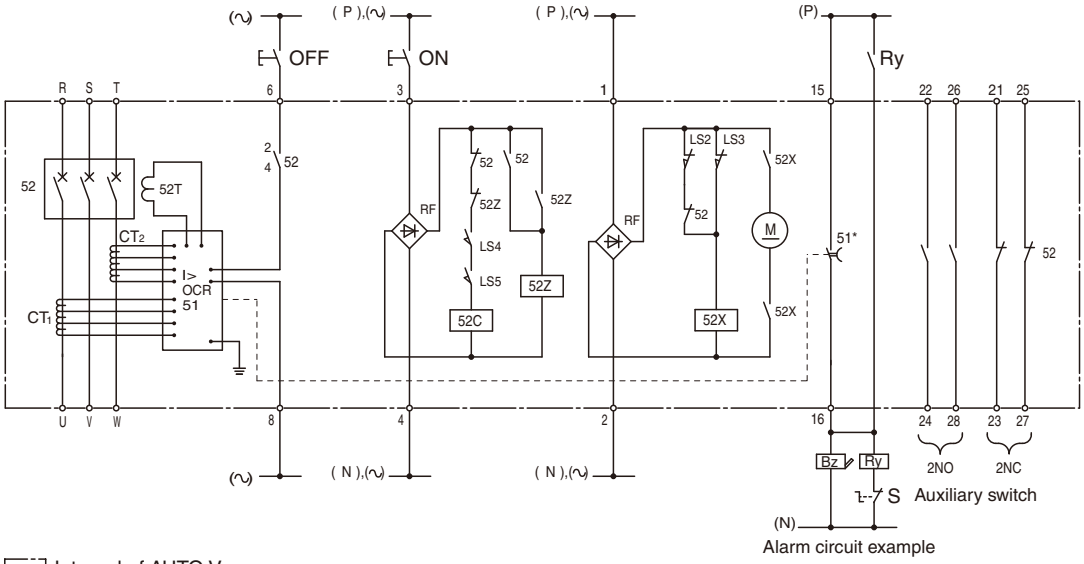

□:Internal of AUTO.V
○ :External terminal of AUTO.V
* Signal on contact 51 turns on instantaneously (60ms)

Terminal block

Manual-spring closing system (Shunt trip 100/110V DC) : AUTO.V

HA □□ - A7, HA □□ - B7

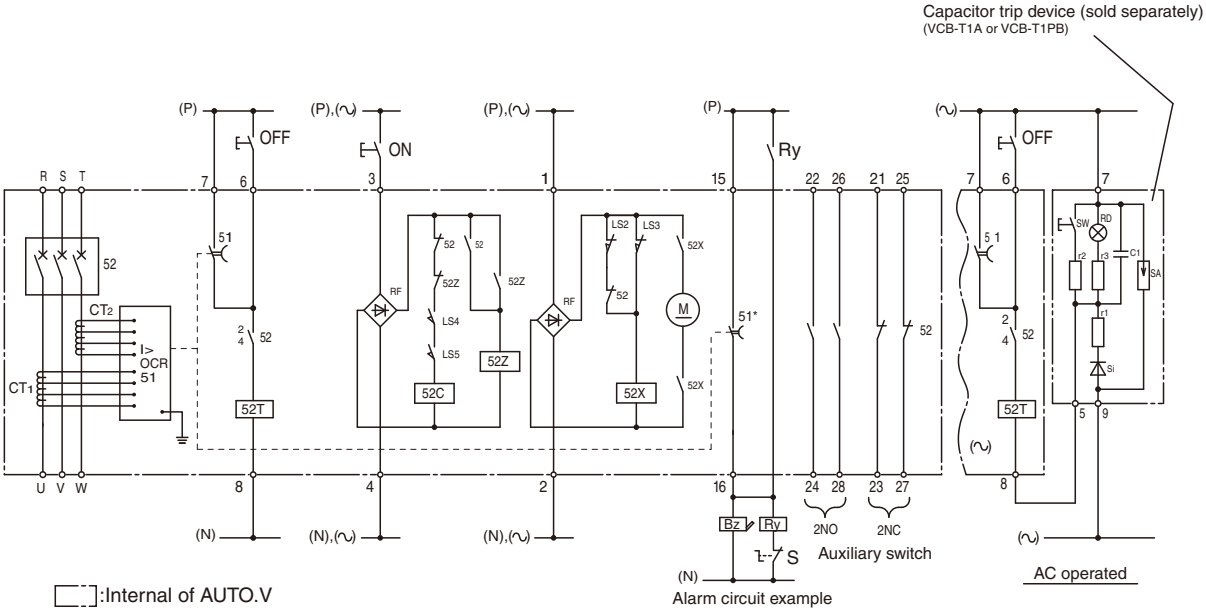

□:Internal of AUTO.V
○ :External terminal of AUTO.V
* Signal on contact 51 turns on instantaneously (60ms)

Terminal block

52C	: Closing coil	LS2	: Limit switch (For motor operation)	51OCR	: Overcurrent relay
52T	: Shunt trip coil	LS3	: Limit switch (For motor operation)	CT_1, CT_2	: Overcurrent detection dedicated current transformer
52X	: Magnetic contactor	LS4	: Limit switch ┐closes when the closing spring	Bz	: Failure indication buzzer
52Z	: Anti-pumping relay	LS5	: Limit switch ┘is in the stored condition	S	: Buzzer stop switch
M	: Motor			Ry	: Control relay (HH22 or HH23)
RF	: Rectifier				

■ Wiring diagrams

AUTO.V with current measurement function

HA □ A □ - A6 □ M1

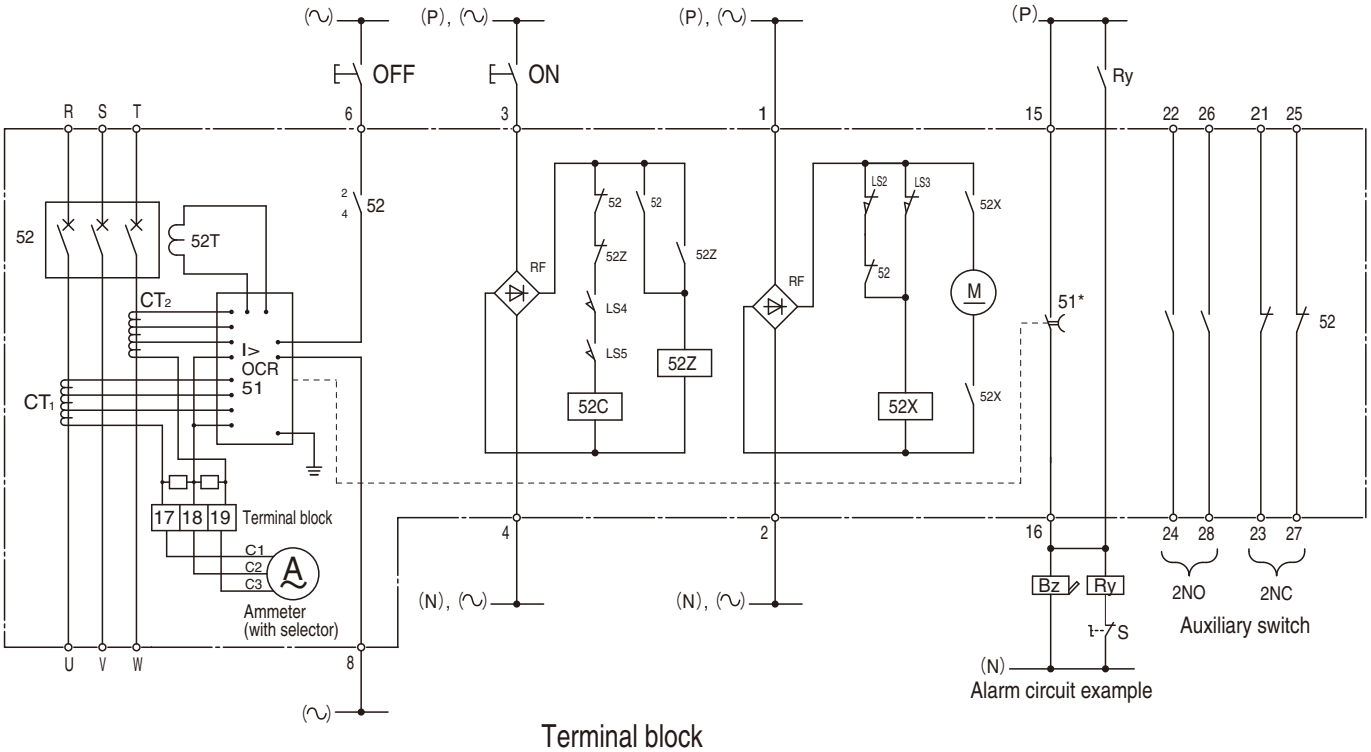

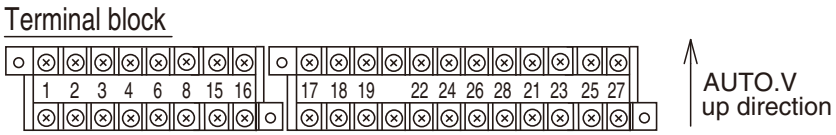

□:Internal of AUTO.V

○ :External terminal of AUTO.V

* Signal on contact 51 turns on instantaneously (60ms)

52C	: Closing coil	LS2	: Limit switch (For motor operation)	51OCR	: Overcurrent relay
52T	: Shunt trip coil	LS3	: Limit switch (For motor operation)	CT_1, CT_2	: Overcurrent detection dedicated current transformer
52X	: Magnetic contactor	LS4	: Limit switch ┐closes when the closing spring	Bz	: Failure indication buzzer
52Z	: Anti-pumping relay	LS5	: Limit switch ┘is in the stored condition	S	: Buzzer stop switch
M	: Motor			Ry	: Control relay (HH22 or HH23)
RF	: Rectifier				

■ Wiring diagrams

Motor-spring closing system + Multiple functions protectors and controllers (Shunt trip 100/110V DC)

HA □ A □ - A8

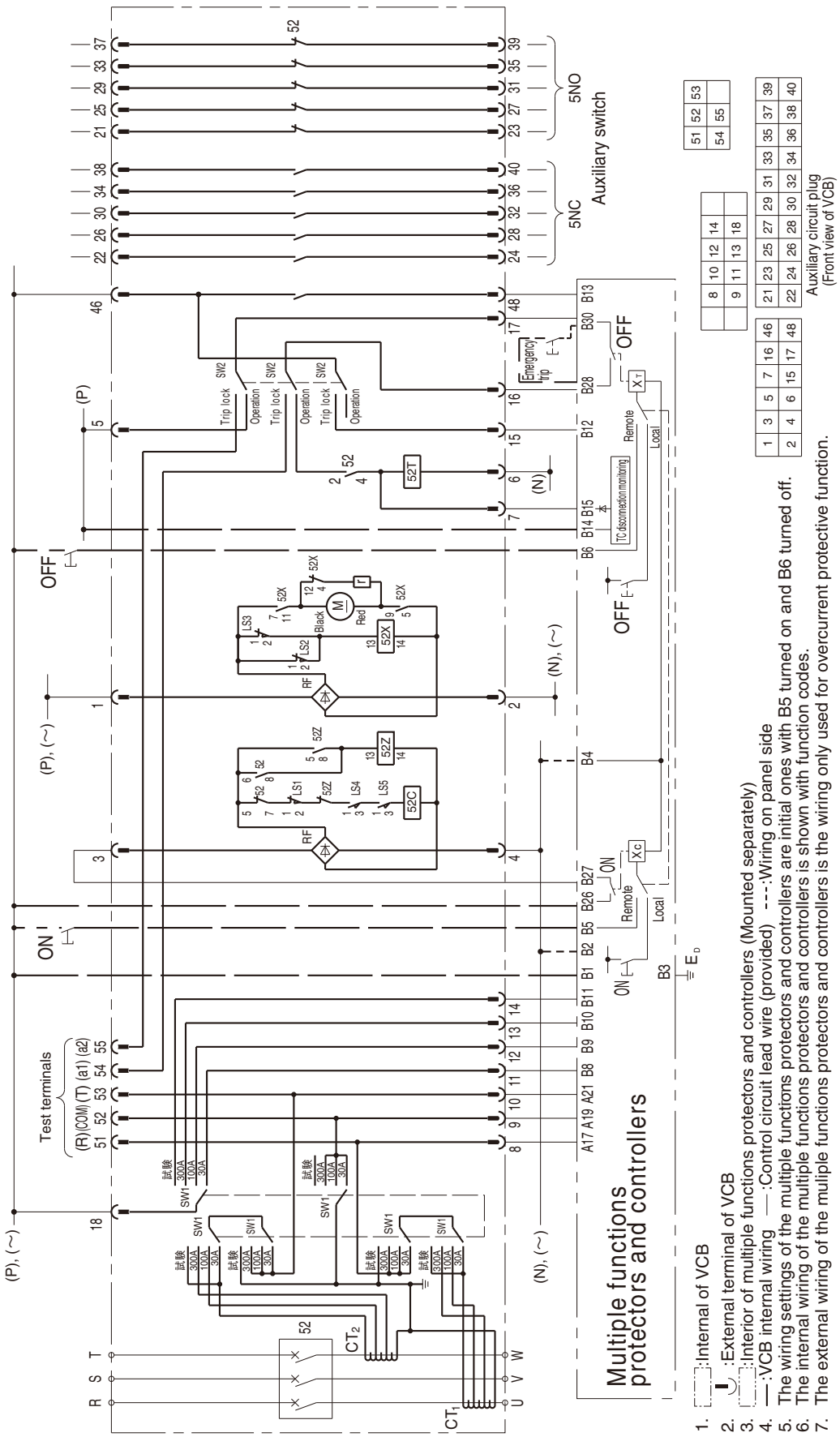

1. ⬚:Internal of VCB
2. ▬:External terminal of VCB
3. ⬚:Interior of multiple functions protectors and controllers (Mounted separately)
4. —:VCB internal wiring —:Control circuit lead wire (provided) ---:Wiring on panel side
5. The wiring settings of the multiple functions protectors and controllers are initial ones with B5 turned on and B6 turned off.
6. The internal wiring of the multiple functions protectors and controllers is shown with function codes.
7. The external wiring of the muliple functions protectors and controllers is the wiring only used for overcurrent protective function.

52C : Closing coil
52T : Shunt trip coil
52X : Magnetic contactor
52Z : Anti-pumping relay
M : Motor
RF : Rectifier
CT1, CT2 : Current transformer

LS1 : Limit switch (Draw-out interlock use)
LS2 : Limit switch (motor stop)
LS3 : Limit switch (motor start)
LS4 : Limit switch (closes when the closing spring is in the stored condition)
LS5 : Limit switch (closes when the closing spring is in the stored condition)

SW1 : Rotary switch (for CT tap or test selection)
SW2 : Toggle switch (for operation and trip lock selection)

■ Wiring diagrams

Motor-spring closing system + Multiple functions protectors and controllers (Shunt trip 100/110V AC)

HA □ A □ - A8 Use of 100 V AC power supply unit (UM2P-A1)

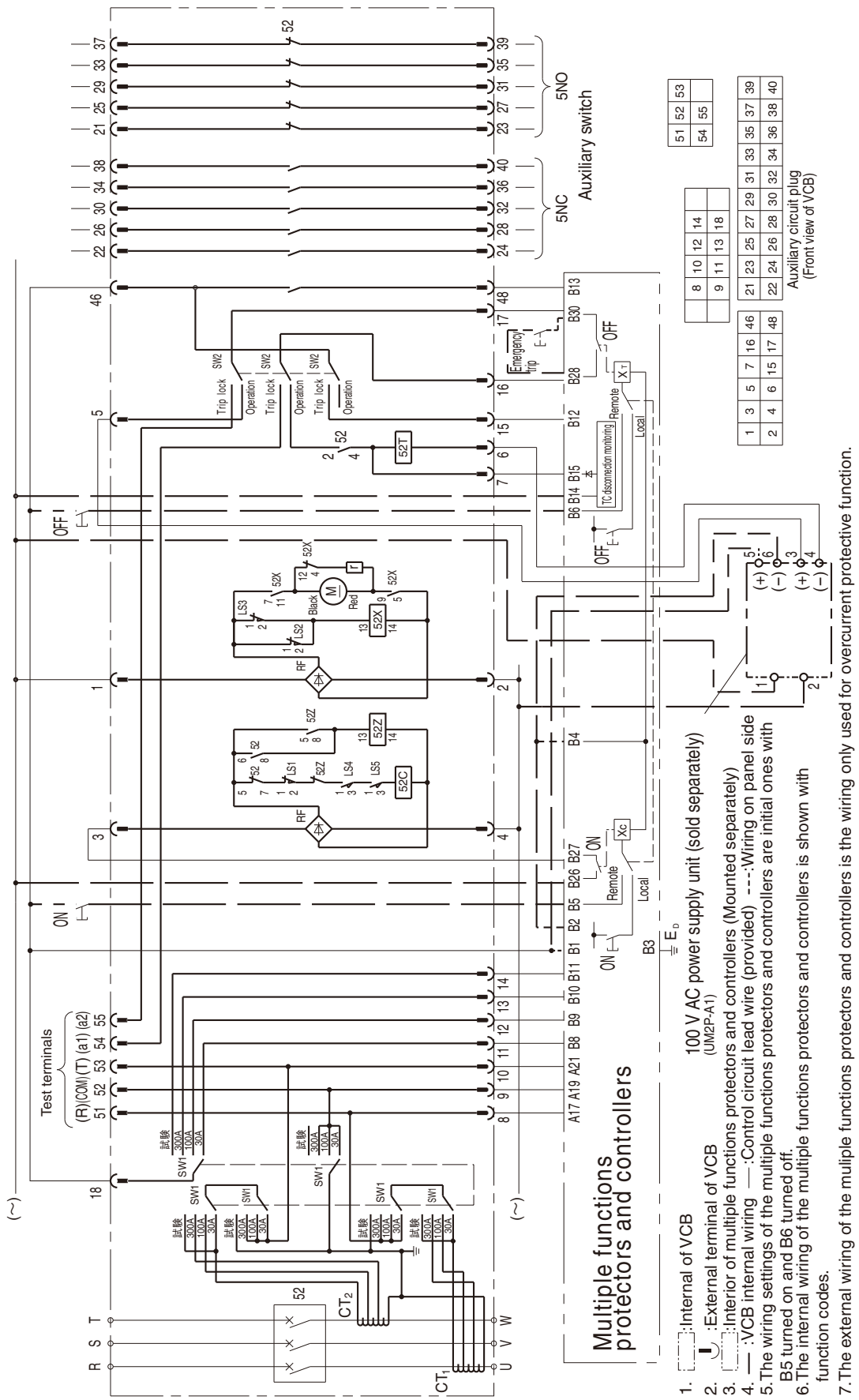

■ Wiring diagrams

Motor-spring closing system + Multiple functions protectors and controllers (Shunt trip 100/110V AC)

HA □ A □ - A8 Capacitor trip device (VCB-T1A or VCB-T1PB) use

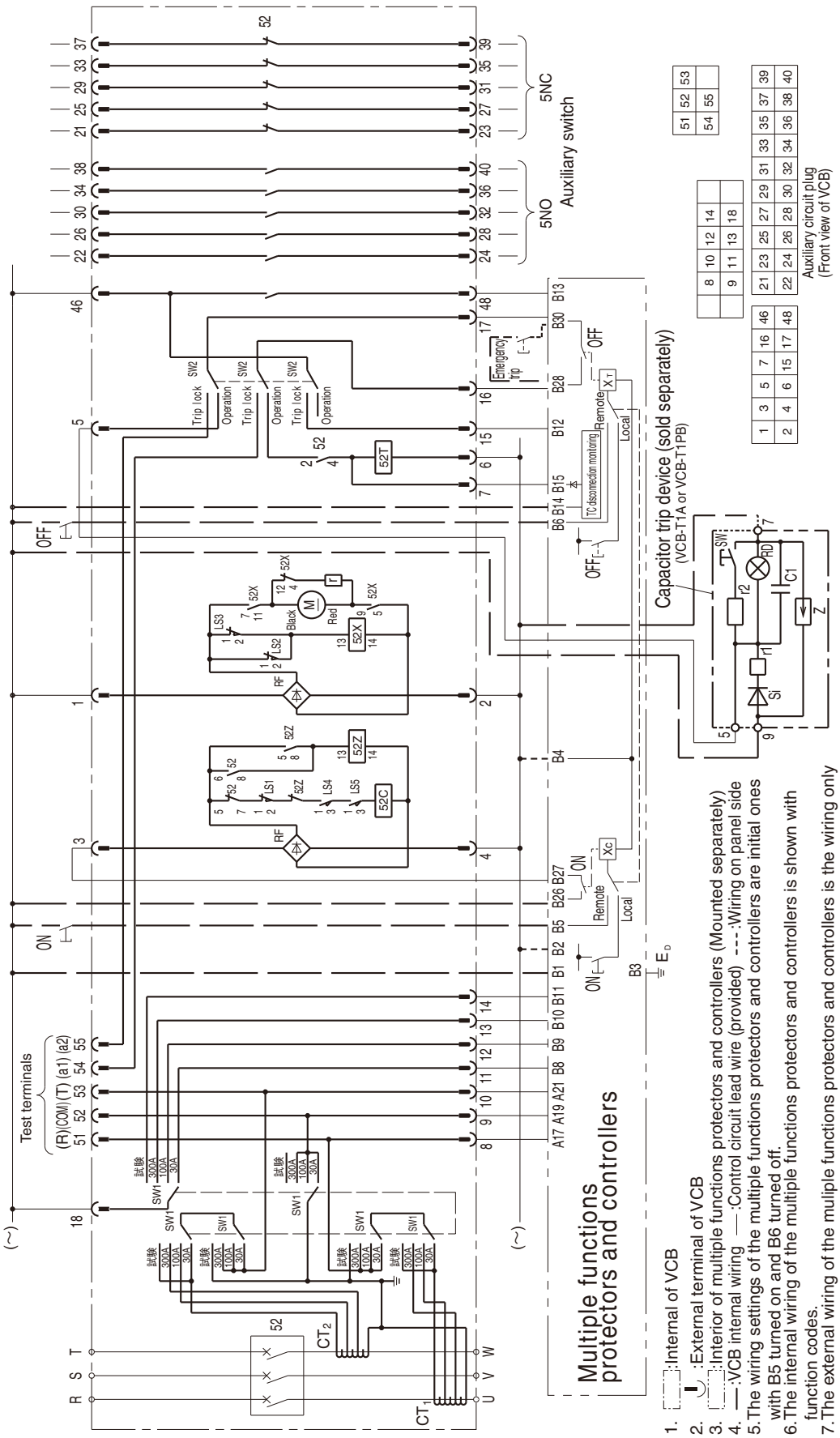

1. :Internal of VCB
2. :External terminal of VCB
3. :Interior of multiple functions protectors and controllers (Mounted separately)
4. —:VCB internal wiring —:Control circuit lead wire (provided) - - - -:Wiring on panel side
5. The wiring settings of the multiple functions protectors and controllers are initial ones with B5 turned on and B6 turned off.
6. The internal wiring of the multiple functions protectors and controllers is shown with function codes.
7. The external wiring of the muliple functions protectors and controllers is the wiring only used for overcurrent protective function.

52C : Closing coil
52T : Shunt trip coil
52X : Magnetic contactor
52Z : Anti-pumping relay
M : Motor
RF : Rectifier
CT1, CT2 : Current transformer

LS1 : Limit switch (Draw-out interlock use)
LS2 : Limit switch (motor stop)
LS3 : Limit switch (motor start)
LS4 : Limit switch (closes when the closing spring is in the stored condition)
LS5 : Limit switch (closes when the closing spring is in the stored condition)

SW1 : Rotary switch (for CT tap or test selection)
SW2 : Toggle switch (for operation and trip lock selection)

Vacuum circuit breakers
MULTI.VCB

■ Description

7.2/3.6kV, 400A, 600A, 8kA, 12.5kA
The new MULTI.VCB series of general-purpose vacuum circuit breakers are based on the conventional HA series and feature improved safety and ease of use. With 2300mm high switchgear cubicles they can be stacked up to four high with consequent saving of installation space. MULTI.VCBs are available in different mounting version such as the fixed type (B, C, P) and draw-out type (X, Y, U).

KKD13-232
B-type

KKD13-249
C-type

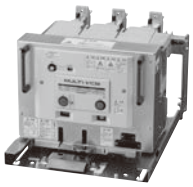
KKD17-044
X-type

KKD17-051
Y-type

■ Features

● Highly reliable and safety closing system

- Manual-spring stored energy closing system for improved operation safety, reliability, and constant closing speed.
- Half the torque formerly required for the manual operation and a new-turn-type handle improve operability.

KKD13-230

KKD13-231

● Motor-spring stored energy type also improved

- Instantaneous closing system
  The new closing system ensures instantaneous closing time of 30ms. during switching to stand by circuit.
- AC/DC control circuit
  Common AC and DC control circuit eases application.

■ More compact

● Terminal blocks

- Terminal blocks are standard for the control circuits of motor-spring VCBs. Wire connect easily and quickly.

● Auxiliary switches

- Slide-action auxiliary switch contacts improve contact reliability.
- Auxiliary switches can have up to 5 NO contacts, and up to 5 NC contacts may be added as options for external circuits.

- The width of the draw-out type is compatible with a panel width of 500mm.
- The depth of the draw-out type is compatible with a panel depth of 700mm.

KKD17-049
Draw-out MW and PW type

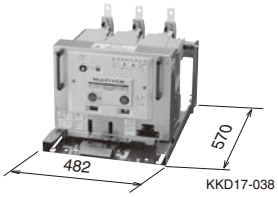

KKD17-038
Draw-out type for small depth switchboard.

E2

■ Specifications

Type		HA08A□–H■	HA12A□–H■	HA08A□–A■	HA12A□–A■	HA08D□–A■	HA12D□–A■
Closing system		Manual-spring		Motor-spring		Motor-spring	
Installation (□: Installation code, *see page E2-51*)		Fixed: B, C, P,		Fixed: B, C, P		Draw-out: X, Y, U	
Rated voltage	(kV)	3.6/7.2		3.6/7.2		3.6/7.2	
Rated current	(A)	400	600	400	600	400	600
Rated frequency	(Hz)	50/60		50/60		50/60	
Rated breaking capacity	(kA)	8	12.5	8	12.5	8	12.5
Rated making current, peak value	(kA)	20	31.5	20	31.5	20	31.5
Rated closing time		—		0.03		0.03	
Rated short-time current, 1 second	(kA)	8	12.5	8	12.5	8	12.5
Insulation level		Dielectric: 22kV, 1 minute Impulse (1.2 × 50μs): 60kV					
Rated breaking time		3-cycle		3-cycle		3-cycle	
Opening time	(s)	0.035		0.035		0.035	
Operating duty		0 — 1 min. — CO — 3 min. — CO or CO — 15 sec. — CO					
Life expectancy	Mechanical (operations)	1,000		10,000			
	Electrical (operations)	1,000		10,000			
No. of operations (operations/hour)		60					
Applicable capacitor capacity *	(kVA)	3,000	5,000	3,000	5,000	3,000	5,000
Auxiliary contact		2NO + 2NC (5NO + 5NC available on request)				5NO + 5NC	
Mass (kg)	Fixed (B, C, P type)	B:26, C:26, P:27		B:31, C:31, P:32		—	
	Draw-out (X type)	—		—		38	
	Cradle for X type	—		—		11	
Standard		H.V. circuit breaker: JIS C 4603 (1990), AC circuit breaker: JEC 2300 (1998)					

Note: * Maximum values when the VCB is used with a 6% reactor connected in a 6.6kV AC circuit.
Halve these values for a 3.3kV AC circuit.
■ : Tripping system, *see page E2-51*.

■ Closing system

System		Specification Voltage	Motor current	Coil current	Remarks
Motor-spring	A	100/110V DC	0.6A	4A	• Use a VT with a capacity of at least 50VA. • Use a 3A fuse to protect the control circuit • Spring charging time is 5 seconds.
		100/110V AC	1.4A	5.6A	
	B	200/220V DC	0.4A	2.5A	
		200/220V AC	0.7A	3.5A	
	C	48V DC	1.5A	5.5A	
	D	21/24V DC	2.5A	12A	

■ Tripping system

System		Specification	Remarks
Shunt trip *1, *2	1	100/110V DC, 3.9A	For an AC-trip control circuit, use also a capacitor trip device VCB-T1A (for 100/110 AC) or VCB-T2A (for 200/220V AC), sold separately.
	2	200/220V DC, 3.3A	
	3	48V DC, 7.6A	
	4	21/24V DC, 12A	
Current trip	5	3A × 2 trip coil	Operating current: At least 3A The impedance of coil is less than 8Ω.

Note: *1 To use AC to trip the MULTI.VCB, use a capacitor trip device in combination with the trip system.
*2 Use the static-type OCR (overcurrent relay) in combination with Fuji Electric's QHA-OC1 or QHA-OC2.

■ Auxiliary contact

Contact arrangement	Specification	Remarks
2NO + 2NC (Fixed type) 5NO + 5NC (Draw-out type) standard provided	100/200V AC, 10A 100/200V DC, 5/3A	5NO + 5NC contacts are available on request

■ Type number nomenclature

• Fixed type

HA 08 A B - A 1 L

Basic type

Breaking capacity
08: 8kA (Rated current 400A)
12: 12.5kA (Rated current 600A)

Installation
B: Fixed, switchboard use
C: Fixed, cubicle use
P: Fixed, portable type

Vacuum interrupter used
Blank: Standard level interrupter
L: Low-level-surge interrupter

Tripping system
1: Shunt trip 100/110V DC
2: Shunt trip 200/220V DC
3: Shunt trip 48V DC
4: Shunt trip 21/24V DC
5: Current trip 3A × 2-trip coil

Closing system
H: Manual-spring
A: Motor-spring, Instantaneous closing 100/110V AC/DC
B: Motor-spring, Instantaneous closing 200/220V AC/DC
C: Motor-spring, Instantaneous closing 48V DC
D: Motor-spring, Instantaneous closing 21/24V DC

• Draw-out type

HA 08 D X - A 1 L S1 K

Basic type

Breaking capacity
08: 8kA (Rated current 400A)
12: 12.5kA (Rated current 600A)

Installation
X: Draw-out, with cradle for JEM 1425 class CW
Y: Draw-out, with cradle and shutter for JEM 1425 class MW and PW
U: For use in small depth switchboard, JEM 1425 class CW

Closing system
A: Motor-spring, Instantaneous closing 100/110V AC/DC
B: Motor-spring, Instantaneous closing 200/220V AC/DC
C: Motor-spring, Instantaneous closing 48V DC
D: Motor-spring, Instantaneous closing 21/24V DC

Panel lead wire
Blank: With panel lead wire
K: Plug only

Position switch
Blank: With no position switch
S1: Run position and test position, both with SPDT contacts

Vacuum interrupter used
Blank: Standard level interrupter
L: Low-level-surge interrupter

Tripping system
1: Shunt trip 100/110V DC
2: Shunt trip 200/220V DC
3: Shunt trip 48V DC
4: Shunt trip 21/24V DC

Vacuum circuit breakers
MULTI.VCB

■ Types and ratings

Ratings	Installation	Closing system Closing system	Operating voltage	Type
Voltage 3.6/7.2kV Breaking current 8.0kA Rated current 400A	Fixed: B	Manual-spring		**HA08AB-H□**
		Motor-spring Instantaneous	100/110V AC/DC	**HA08AB-A□**
			200/220V AC/DC	**HA08AB-B□**
			48V DC	**HA08AB-C□**
			21/24V DC	**HA08AB-D□**
	Fixed: C	Manual-spring		**HA08AC-H□**
		Motor-spring Instantaneous	100/110V AC/DC	**HA08AC-A□**
			200/220V AC/DC	**HA08AC-B□**
			48V DC	**HA08AC-C□**
			21/24V DC	**HA08AC-D□**
	Fixed: P	Manual-spring		**HA08AP-H□**
		Motor-spring Instantaneous	100/110V AC/DC	**HA08AP-A□**
			200/220V AC/DC	**HA08AP-B□**
			48V DC	**HA08AP-C□**
			21/24V DC	**HA08AP-D□**
	Draw-out: X	Motor-spring Instantaneous	100/110V AC/DC	**HA08DX-A□**
			200/220V AC/DC	**HA08DX-B□**
			48V DC	**HA08DX-C□**
			21/24V DC	**HA08DX-D□**
	Draw-out: Y	Motor-spring Instantaneous	100/110V AC/DC	**HA08DY-A□**
			200/220V AC/DC	**HA08DY-B□**
			48V DC	**HA08DY-C□**
			21/24V DC	**HA08DY-D□**
	Draw-out: U	Motor-spring Instantaneous	100/110V AC/DC	**HA08DU-A□**
			200/220V AC/DC	**HA08DU-B□**
			48V DC	**HA08DU-C□**
			21/24V DC	**HA08DU-D□**
Voltage 3.6/7.2kV Breaking current 12.5kA Rated current 600A	Fixed: B	Manual-spring		**HA12AB-H□**
		Motor-spring Instantaneous	100/110V AC/DC	**HA12AB-A□**
			200/220V AC/DC	**HA12AB-B□**
			48V DC	**HA12AB-C□**
			21/24V DC	**HA12AB-D□**
	Fixed: C	Manual-spring		**HA12AC-H□**
		Motor-spring Instantaneous	100/110V AC/DC	**HA12AC-A□**
			200/220V AC/DC	**HA12AC-B□**
			48V DC	**HA12AC-C□**
			21/24V DC	**HA12AC-D□**
	Fixed: P	Manual-spring		**HA12AP-H□**
		Motor-spring Instantaneous	100/110V AC/DC	**HA12AP-A□**
			200/220V AC/DC	**HA12AP-B□**
			48V DC	**HA12AP-C□**
			21/24V DC	**HA12AP-D□**
	Draw-out: X	Motor-spring Instantaneous	100/110V AC/DC	**HA12DX-A□**
			200/220V AC/DC	**HA12DX-B□**
			48V DC	**HA12DX-C□**
			21/24V DC	**HA12DX-D□**
	Draw-out: Y	Motor-spring Instantaneous	100/110V AC/DC	**HA12DY-A□**
			200/220V AC/DC	**HA12DY-B□**
			48V DC	**HA12DY-C□**
			21/24V DC	**HA12DY-D□**
	Draw-out: U	Motor-spring Instantaneous	100/110V AC/DC	**HA12DU-A□**
			200/220V AC/DC	**HA12DU-B□**
			48V DC	**HA12DU-C□**
			21/24V DC	**HA12DU-D□**

Tripping system

□ : 1: Shunt trip 100/110V DC
2: Shunt trip 200/220V DC
3: Shunt trip 48V DC
4: Shunt trip 21/24V DC
5: Current trip 3A × 2 -trip coil (Fixed type only)

■ Installation and accessories

Photo	Installation system	Description	Supplied accessories	Optional accessories
KKD13-232	Fixed: B 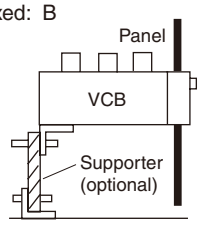	• Fixed type • Open-type switchboard, indoor use • Manual-spring handle or motor-spring • M.V. main terminals are positioned at the top of the VCB. This facilitates replacement of VCB.	• Insulation tube for main terminal • Manual handle for motor-spring type	• Supporter • Capacitor trip device • Vacuum condition tester • Surge absorber
KKD13-249	Fixed: C 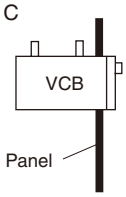	• Fixed type • Open-type cubicle use • Manual-spring handle or motor-spring • M.V. main terminals are located at the top of VCB. This facilitates replacement of VCB.	• Insulation tube for main terminal • Manual handle for motor-spring type	• Supporter • Capacitor trip device • Vacuum condition tester • Surge absorber
KKD13-226	Fixed: P 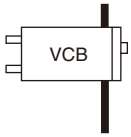	• Fixed type • Open-type, portable type • Manual-spring handle or motor-spring • M.V. main terminals are located at the back of VCB. This facilitates replacement of VCB.	• Manual handle for motor-spring type	• Capacitor trip device • Vacuum condition tester • Surge absorber
KKD17-044	Draw-out: X With cradle 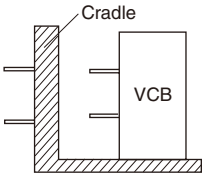	• Draw-out type • JEM 1425 Class CW type metal enclosure/indoor use • Manual-spring handle or motor-spring • Cradle is provided to facilitate assembly and adjustment of switchgear. • Interlock system and grounding device are provided.	• Manual handle for motor-spring type • Draw-out handle	• Draw-out extension rail • Position indicating switch • Capacitor trip device • Vacuum condition tester • Surge absorber • Lifter • Testing jumper • Connector with external lead wire
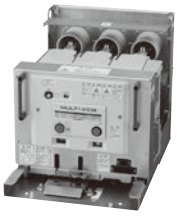 KKD17-051	Draw-out: Y With cradle and shutter 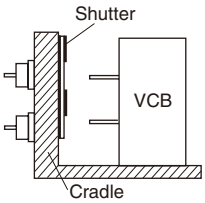	• Draw-out type • Class MW, PW type metal enclosure/indoor use • Manual-spring handle or motor-spring • Cradle with shutter is provided to facilitate assembly and adjustment of switchgear. • Interlock system and grounding device are provided.	• Manual handle for motor-spring type • Draw-out handle	• Draw-out extension rail • Position indicating switch • Capacitor trip device • Vacuum condition tester • Surge absorber • Lifter • Testing jumper • Connector with external lead wire
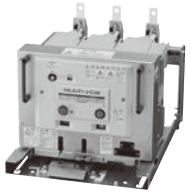 KKD17-038	Draw-out: U With cradle and shutter 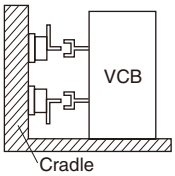	• Draw-out type • Class CW type metal enclosure/indoor use • Manual-spring handle or motor-spring • Cradle with shutter is provided to facilitate assembly and adjustment of switchgear. • Interlock system and grounding device are provided.	• Manual handle for motor-spring type • Draw-out handle	• Draw-out extension rail • Position indicating switch • Capacitor trip device • Vacuum condition tester • Surge absorber • Lifter • Testing jumper • Connector with external lead wire

Vacuum circuit breakers
MULTI.VCB

■ Supplied accessories

● **Insulation tube for main terminal**
Installation types: B and C

AF88-1108

● **Manual handle for motor-spring type**

KK03-073

● **Draw-out handle**
Installation types: X, Y, and U

KK03-074

• Connector with external lead wire
Installation types: X, Y and U

KK03-075

■ Optional accessories

● **Supporter**
Supporter kit for stabilizing the back of fixed type B, C VCB on the floor.

Type: C

Type: B

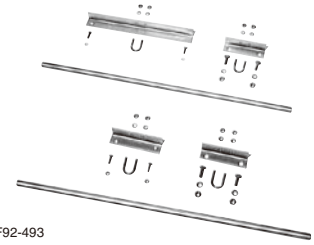

AF92-493

● **Draw-out extension rail** (HZ2AE)
Used with draw-out type (X, Y, U).
Use of an extension rail makes daily checking easier because the VCB can be pulled out of the panel.
Double stack types do not require lifters or chain blocks.

KK03-079

● **Position indicating switch** (HZ2AD)
Switch for indicating the service positions and test positions of draw-out (X, Y, U). Used for interlocking to other devices attached to the cradle for draw-out type.

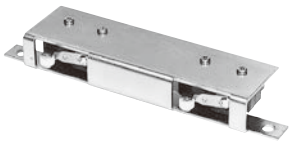

SG 1075

● **Vacuum condition tester**
VC-1A
For further information see page E2-23.

KKD17-062

● **C-R type surge absorber**
AF3320R3TC5R
AF6620R3TC5R
For further information see page E2-23.

● **Testing jumper** (HZ2AG)
Use to test remote ON/OFF operation of a VCB.

KK03-078

● **Arrester**
GLI-3G
GLI-6G

AF94-104

● **Capacitor trip device**
VCB-T1A, T2A, VCB-T1PB, T2PB
These are used when the trip circuit is connected to AC power supply.

Type	VCB-T1A VCB-T1PB	VCB-T2A VCB-T2PB
Rated input voltage	100/110V AC	200/220V AC
Rated output voltage	140/155V DC	280/310V DC

Wiring diagram

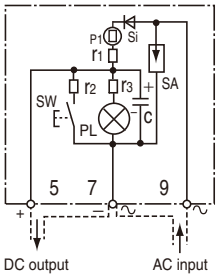

Surface mounting
VCB-T1A, T2A

KK04-064

Flush mounting
VCB-T1PB, T2PB

VCB-T1PB

● **Lifter**
L-2HNB

KK03-080

Name
r1: Charging resistor
r2: Discharge resistor
r3: Series resistor
Si: Silicon rectifier diode
PL: Pilot lamp
C: Electrolytic capacitor
SW: Discharge switch
SA: SPD
P1: Thermistor
(for VCB-T1PB, T2PB)

■ Dimensions, mm

HA □ AB - H (Installation: Switchboard use, Manual-spring closing system)

The dimensions for a 2NO+2NC auxiliary switch are different, so , please contact us regarding specifications.

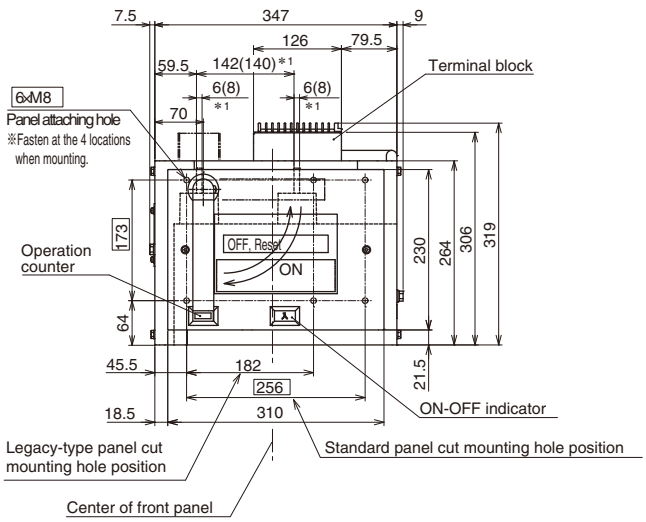

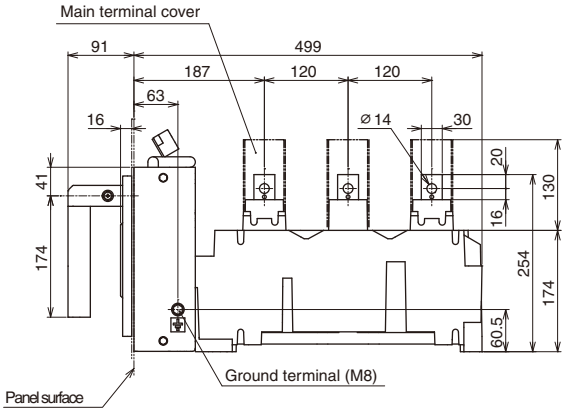

* 1 ( ): For HA12AB

・Panel cutting

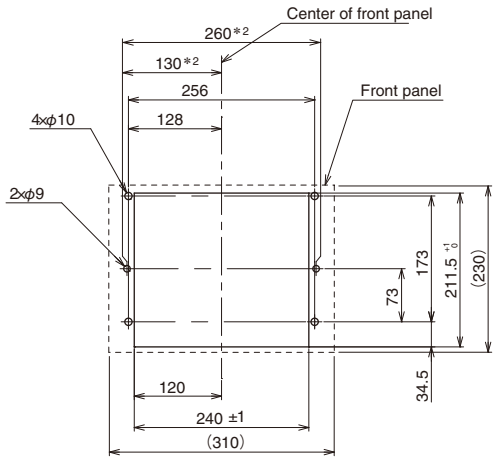

* 2) Dimensions: 2xø9

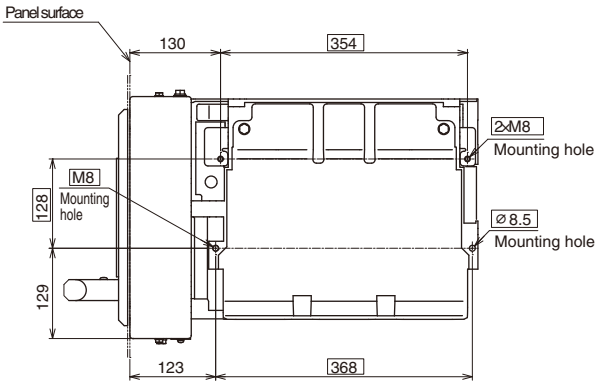

■ Dimensions, mm

HA □ AB - A (Installation: Switchboard use, Motor-spring closing system)

The dimensions for a 5NO+5NC auxiliary switch are different, so , please contact us regarding specifications.

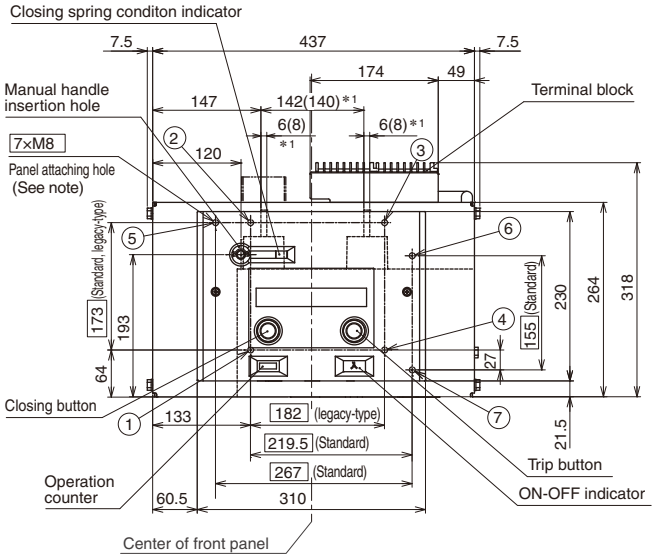

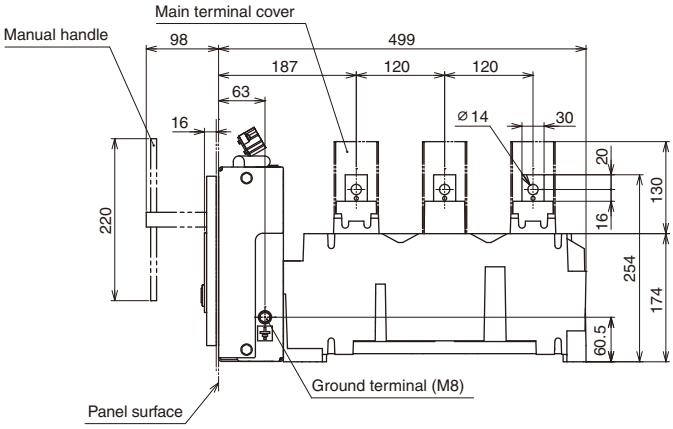

＊1 ( ): For HA12AB

(Note) Fasten at the 4 locations when mounting the panel.
Fastening locations: ①⑤⑥⑦ for the panel cutting diagram provided below
①②③④ when mounting to legacy-type panels

・Panel cutting

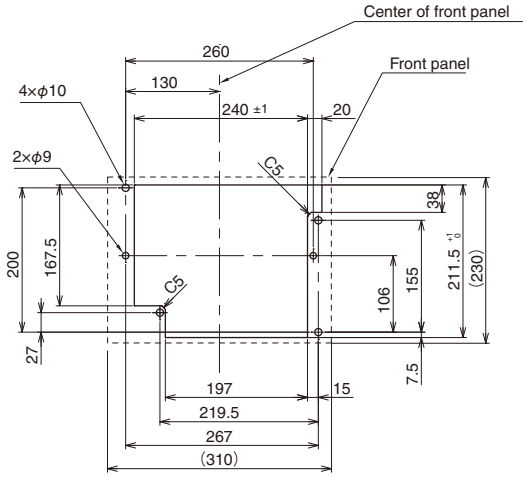

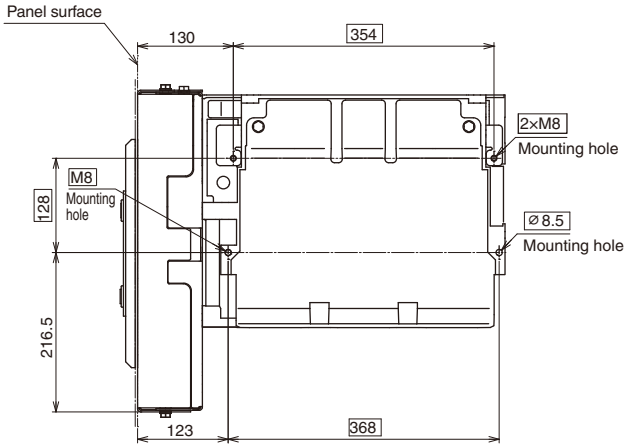

■ Dimensions, mm

HA □ AC - H (Installation: Cubicle use, Manual-spring closing system)

The dimensions for a 2NO+2NC auxiliary switch are different, so , please contact us regarding specifications.

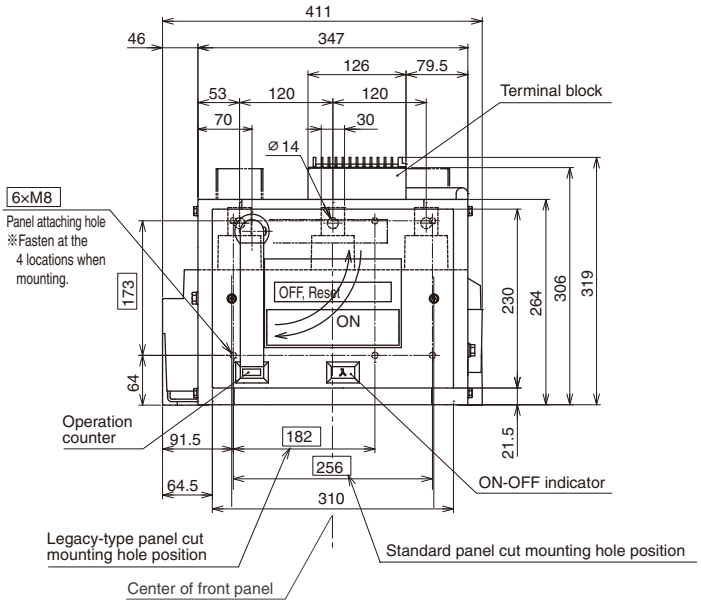

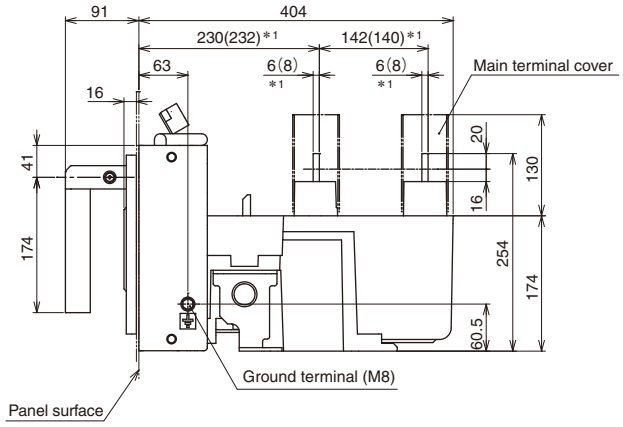

＊1 ( ): For HA12AC

・Panel cutting

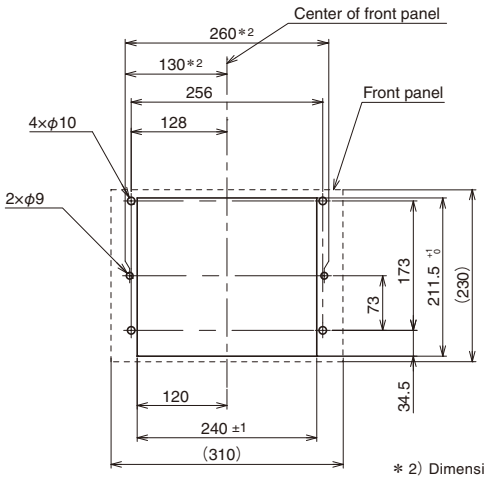

＊2) Dimensions: 2xø9

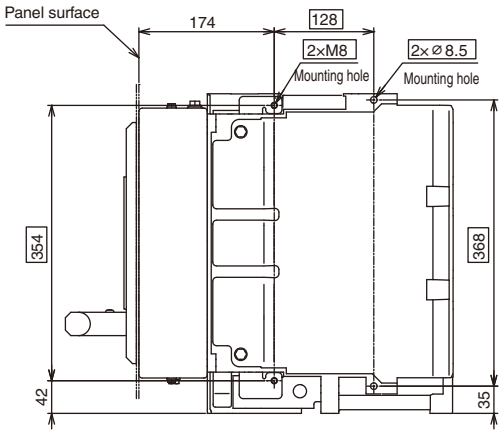

E2

■ Dimensions, mm

HA □ AC - A (Installation: Cubicle use, Motor-spring closing system)

The dimensions for a 5NO+5NC auxiliary switch are different, so , please contact us regarding specifications.

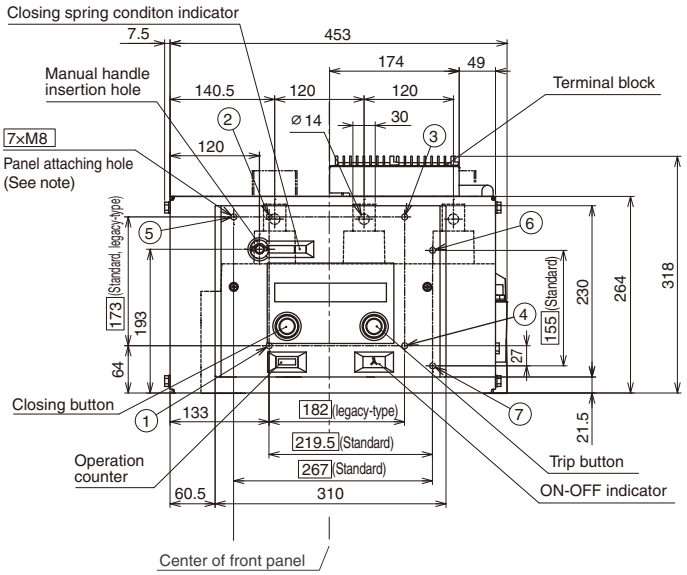

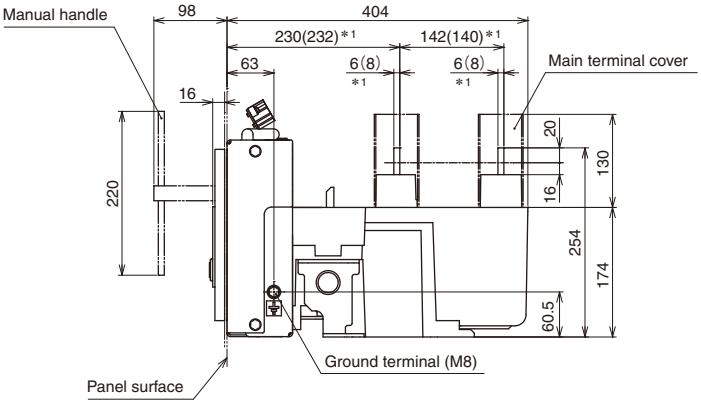

(Note) Fasten at the 4 locations when mounting the panel.
Fastening locations: ①⑤⑥⑦ for the panel cutting diagram provided below
①②③④ when mounting to legacy-type panels

＊1 ( ): For HA12AC

・Panel cutting

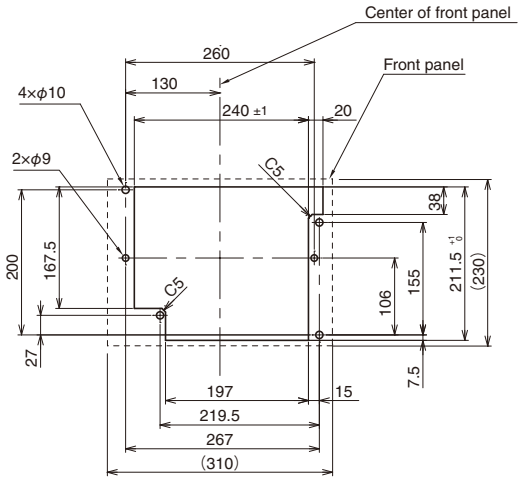

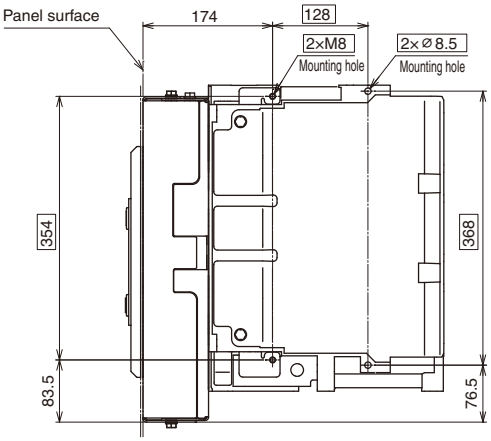

■ Dimensions, mm

HA □ AP - H (Installation: Portable type, Manual-spring closing system)

The dimensions for a 2NO+2NC auxiliary switch are different, so , please contact us regarding specifications.

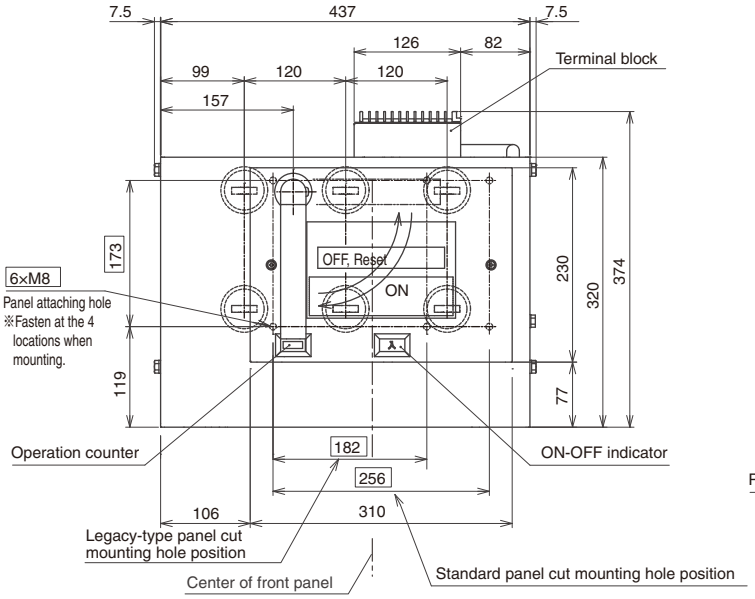

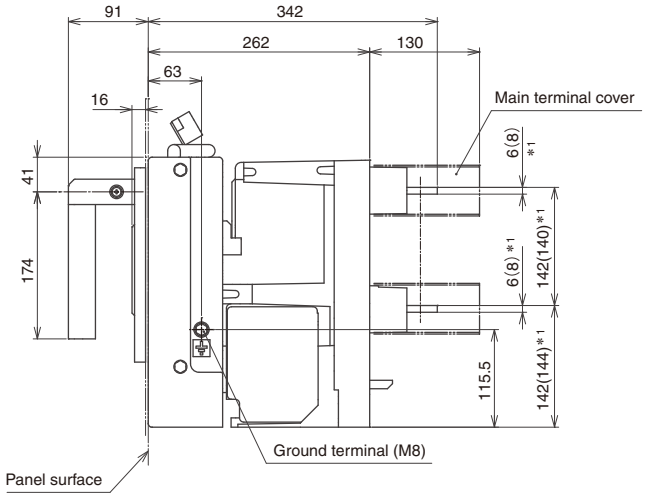

＊1 ( ): For HA12AP

・Panel cutting

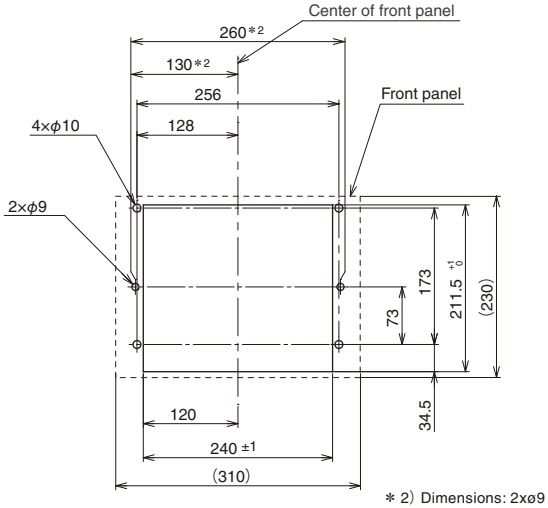

＊2) Dimensions: 2xø9

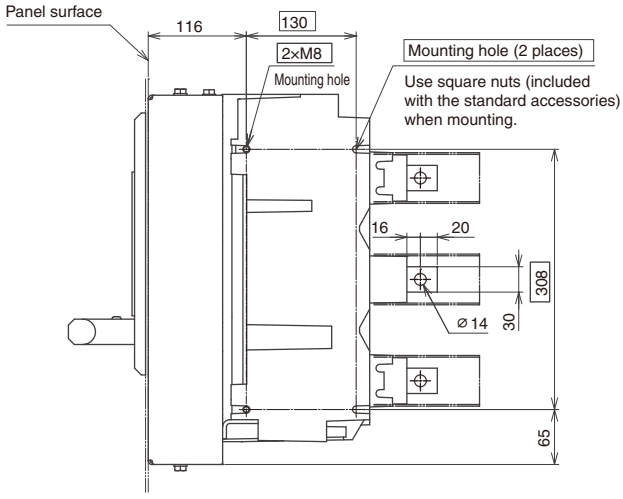

E2

Vacuum circuit breakers
MULTI.VCB

■ Dimensions, mm

HA □ AP - A (Installation: Portable type, Motor-spring closing system)

The dimensions for a 5NO+5NC auxiliary switch are different, so , please contact us regarding specifications.

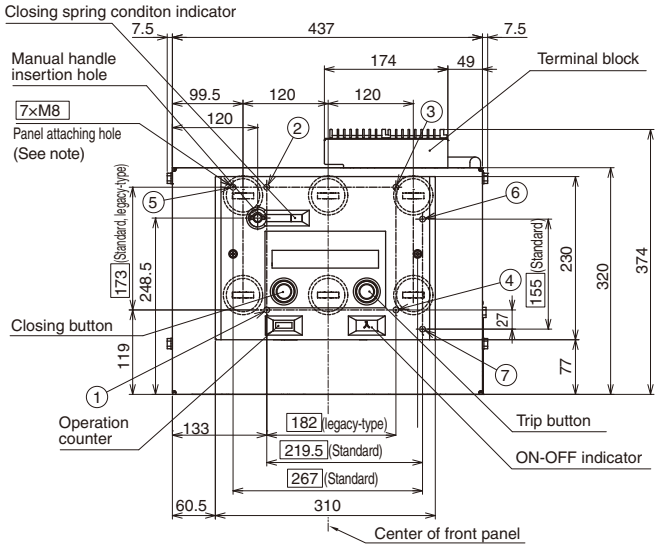

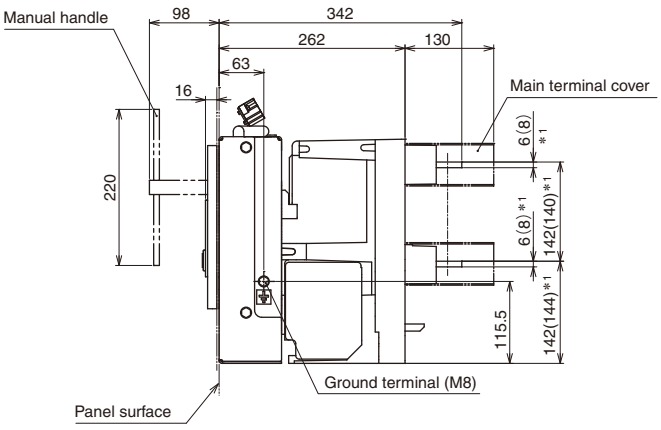

(Note) Fasten at the 4 locations when mounting the panel.
Fastening locations: ①⑤⑥⑦ for the panel cutting diagram provided below
①②③④ when mounting to legacy-type panels

＊1 ( ): For HA12AP

・Panel cutting

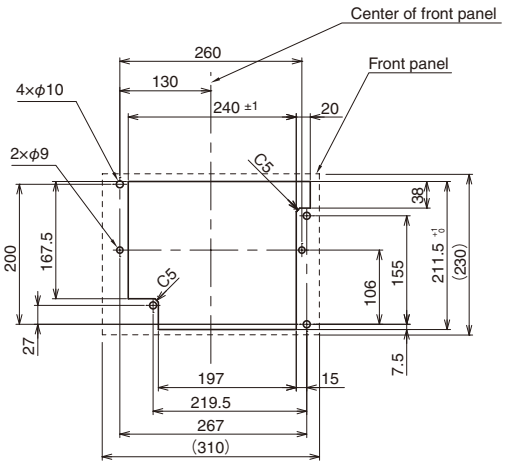

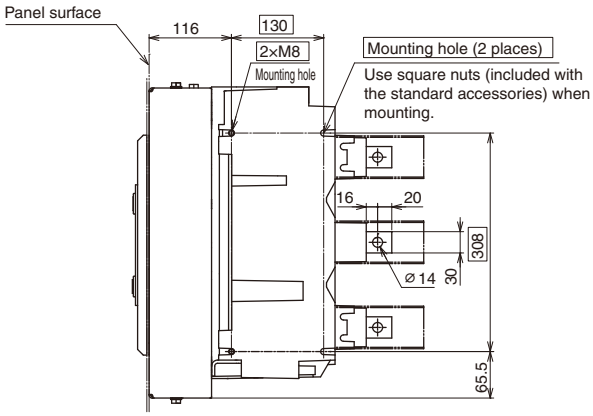

■ Dimensions, mm

HA □ DX (Installation: Draw-out type (CW), Motor-spring closing system)

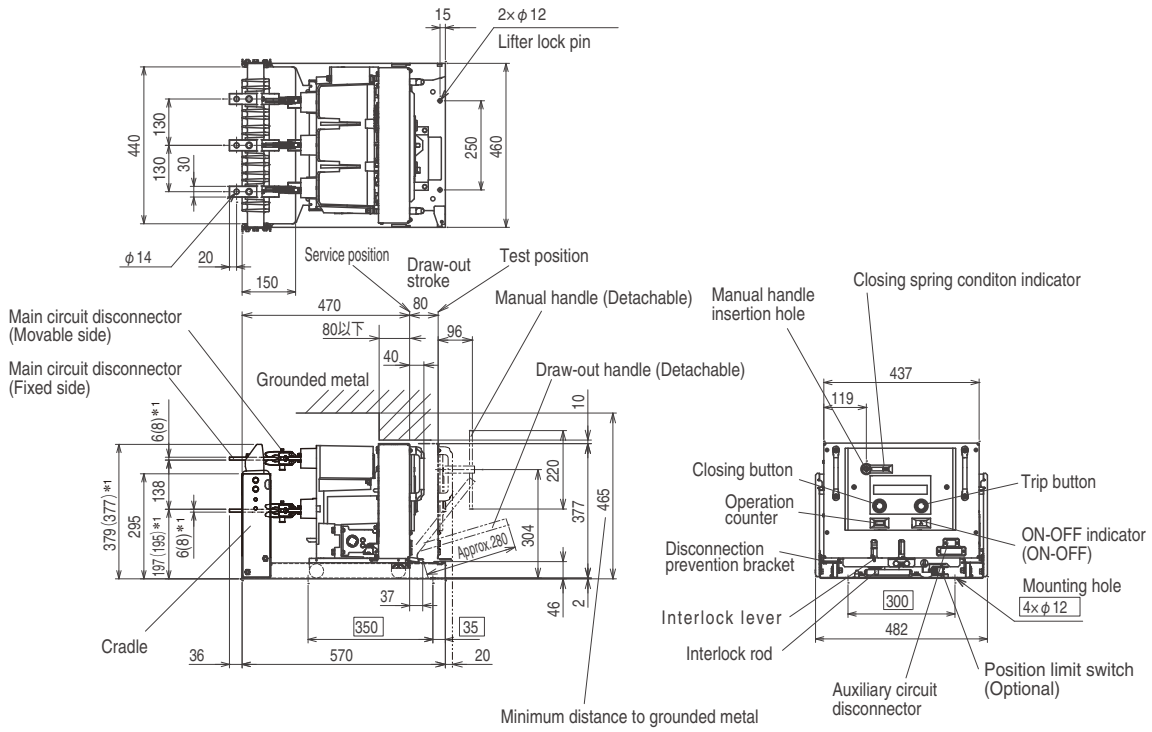

＊1 ( ): For HA12DX

HA □ DY (Installation: Draw-out type (MW, PW), Motor-spring closing system)

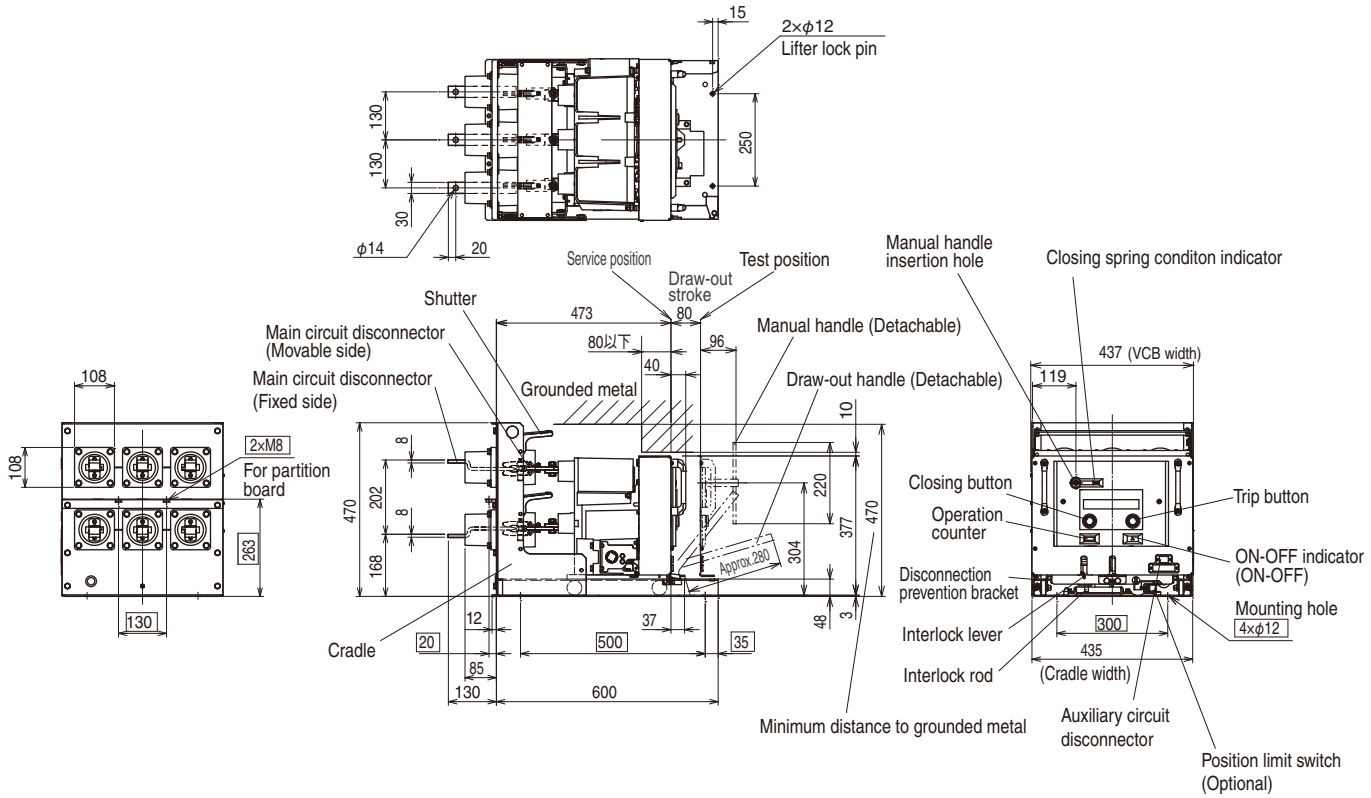

Vacuum circuit breakers
MULTI.VCB

■ Dimensions, mm

HA □ DU (Installation: Draw-out type (For use in small depth switchboard, CW), Motor-spring closing system)

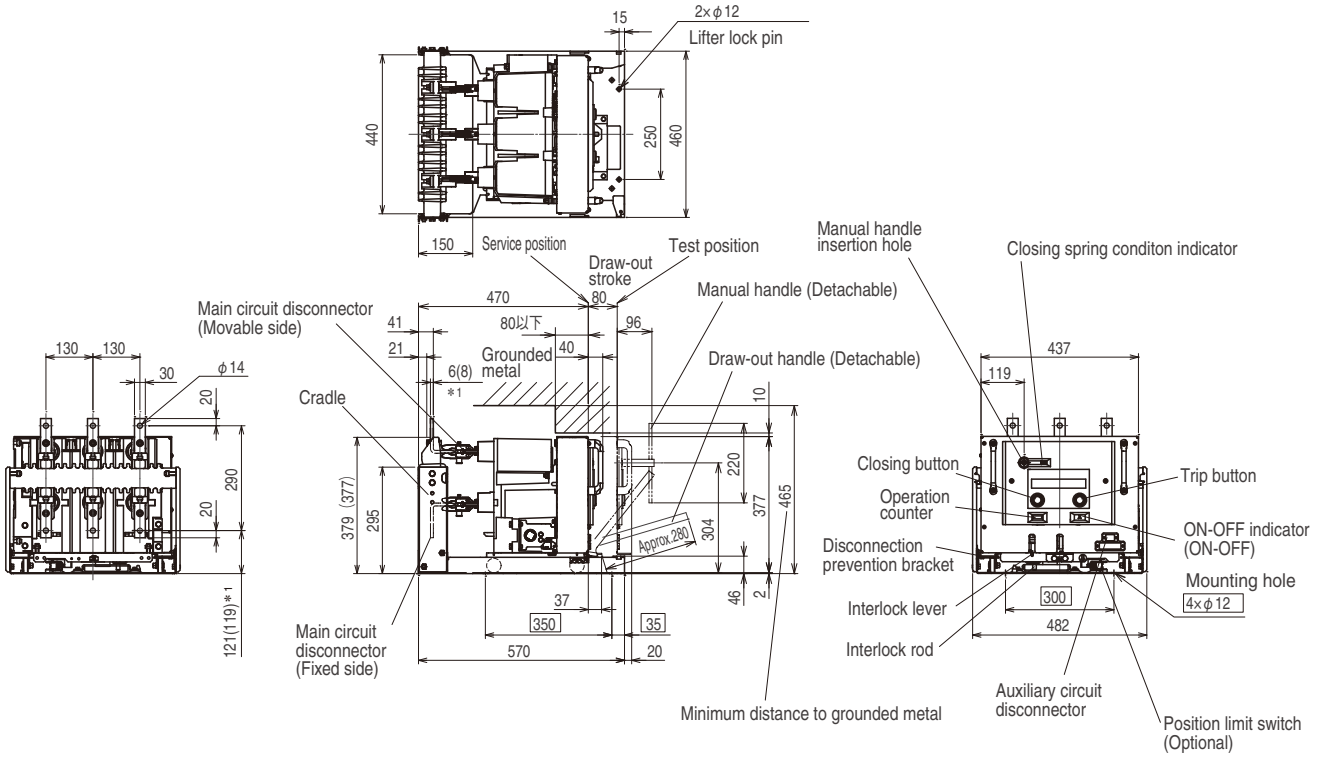

＊1 ( ): For HA12DU

■ Wiring diagrams

Manual-spring closing system + Current trip

HA □ A □ - H5

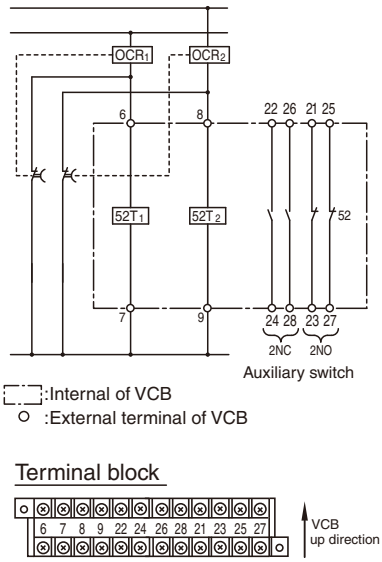

・Connected with ground fault relay

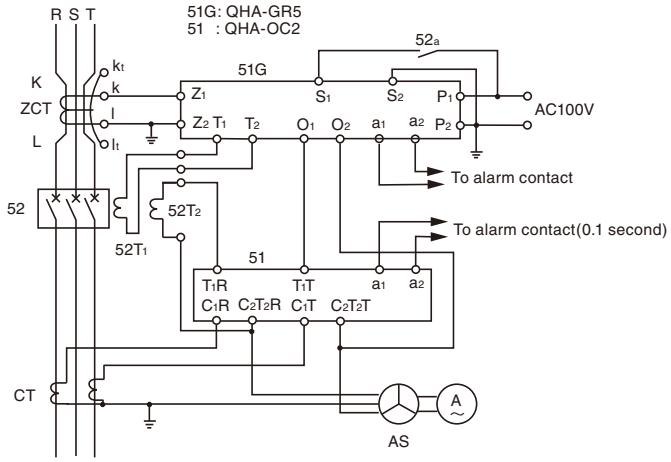

Manual-spring closing system + Shunt trip

HA □ A □ - H1, HA □ A □ - H2, HA □ A □ - H3, HA □ A □ - H4

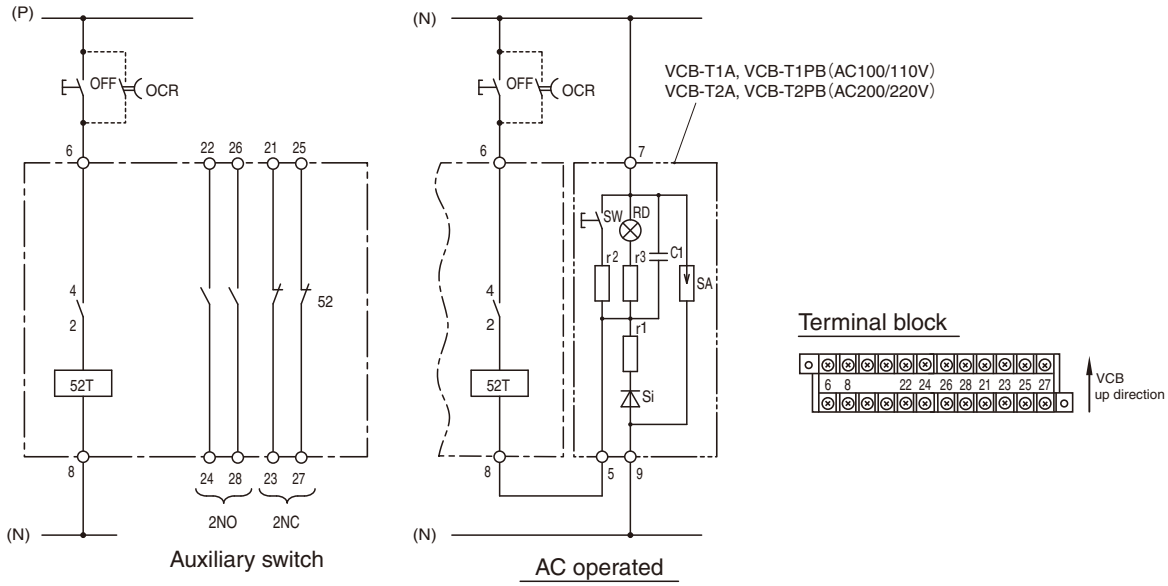

:Internal of VCB
○ :External terminal of VCB

$52T_1$, $52T_2$, 52T： Shunt trip coil
VCB-T1A, VCB-T1PB, VCB-T2A, VCB-T2PB： Capacitor trip device (sold separately)
OCR, OCR_1, OCR_2： Overcurrent protective relay (sold separately)

■ Wiring diagrams

Motor-spring closing system + Shunt trip

HA □ A □ - A ※, HA □ A □ - B ※ (※ : 1, 2, 3, 4)

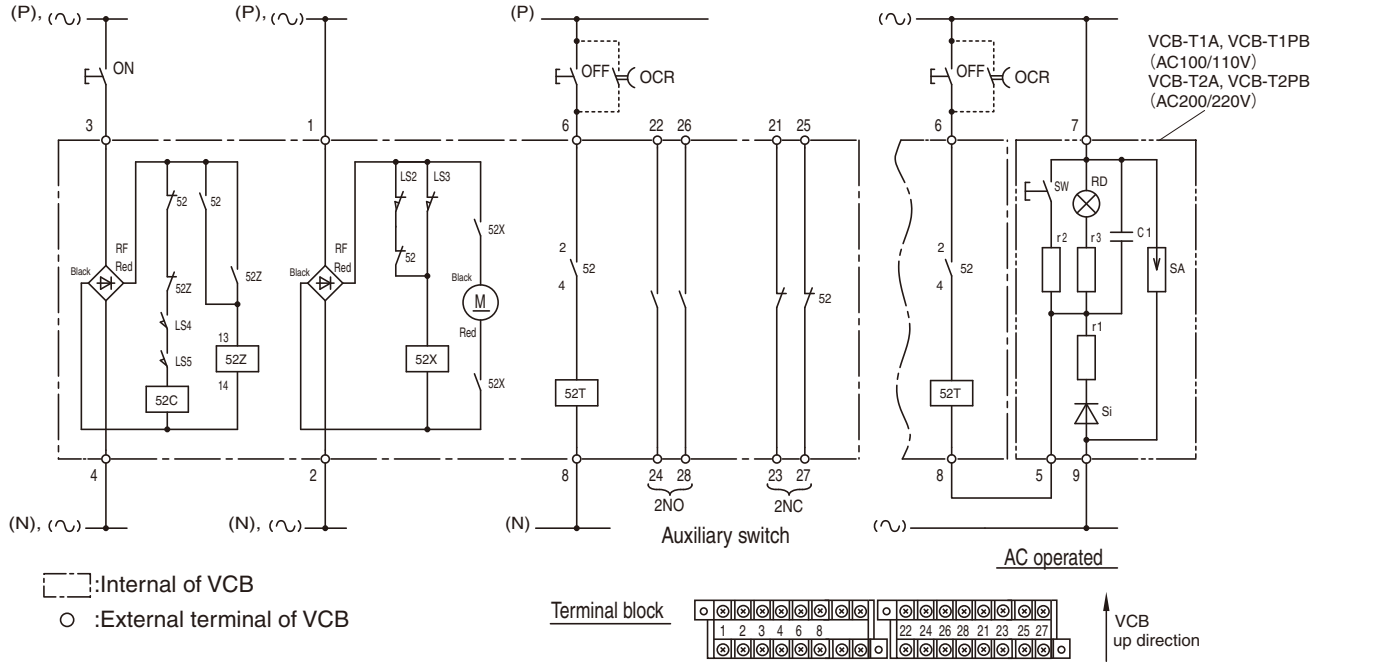

52C : Closing coil
52T : Shunt trip coil
52X : Magnetic contactor
52Z : Anti-pumping relay
M : Motor
RF : Rectifier

LS2 : Limit switch (For motor operation)
LS3 : Limit switch (For motor operation)
LS4 : Limit switch
LS5 : Limit switch
(closes when the closing spring is in the stored condition)

VCB-T1A, VCB-T1PB, VCB-T2A, VCB-T2PB
: Capacitor trip device (sold separately)
OCR : Overcurrent protective relay (sold separately)

E2

Draw-out type, Motor-spring closing system + Shunt trip

HA □ D □ - A ※, HA □ D □ - B ※ (※ : 1, 2, 3, 4)

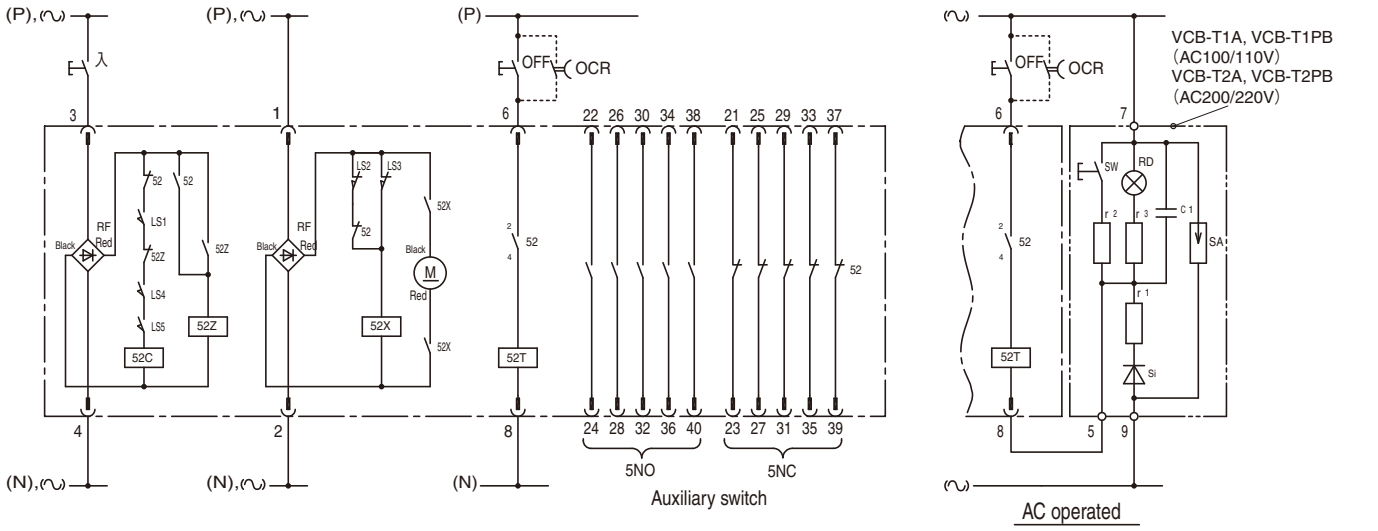

52C : Closing coil
52T : Shunt trip coil
52X : Magnetic contactor
52Z : Anti-pumping relay
M : Motor
RF : Rectifier

LS1 : Limit switch (Draw-out interlock use)
LS2 : Limit switch (For motor operation)
LS3 : Limit switch (For motor operation)
LS4 : Limit switch
LS5 : Limit switch
(closes when the closing spring is in the stored condition)

VCB-T1A, VCB-T1PB, VCB-T2A, VCB-T2PB : Capacitor trip device (sold separately)
OCR : Overcurrent protective relay (sold separately)

Vacuum magnetic contactors
HN series

■ Description

3.3/6.6kV 200, 400 Amps

HN-type vacuum magnetic contactors incorporate a SUPER MAGNET that has a built-in IC. The IC minimizes the power consumption used in the closing circuit. HN types vacuum magnetic contactors operate on both AC and DC power supplies. A common insulating frame for units with a rated voltage of 3kV and 6kV simplifies switchgear design.

■ Features

The SUPER MAGNET
• Holding currents are minimized with an IC-controlled closing circuit. This is a cost-effective feature.
• Both AC and DC power supply operation possible.
• The SUPER MAGNET holds without chattering even when the line control voltage drops.
• The SUPER MAGNET's wide range of operating voltages allows it to be used in countries throughout the world.

Operating coil voltage

Rated voltage AC (50/60Hz)	DC	Operating voltage range
–	21–24V	85–110% of rated voltage
–	48V	
100–110V	100–110V	
200–220V	200–220V	

Shared insulating frame for 3kV and 6kV contactors

HN type vacuum magnetic contactors have a special insulating frame. The dimensions of the frame are the same for both 3kV and 6kV models, which facilitates switchgear design.

Advanced vacuum interrupter

A high performance interrupter minimizes surges due to closing and breaking, which makes special surge precautions unnecessary.

HN46AP KKD17-026

HN46AY AF99-160

■ Specifications

Type		HN46A□*1-2	HN46A□*1-4
Rated voltage	(kV)	3.3/6.6	
Rated frequency	(Hz)	50/60	
Rated current	(A)	200	400
Rated breaking current	(kA)	4	
Rated short-time current	(kA)	4 (2 sec.)	
Insulation level			
Dielectric strength/1 min	(kV)	22 (16 between poles)	
Impulse 1.2X50μs	(kV)	60 (45 between poles)	
Making and breaking capacity	(kA)	1.6	3.2
Operating frequency	(sw/hour)		
Normal energized type		600	
Mechanically latched type		600	
Electrical durability	(Operations)	250,000	
Mechanical durability	(Operations)		
Normal energized type		2,500,000	
Mechanically latched type		250,000	
Average operating time			
Opening time	(ms)	140	
Closing time			
Normal energized type	(ms)	100	
Mechanically latched type	(ms)	20	
Auxiliary contact		3NO+3NC	
Max. applicable load (3.3/6.6kV)			
3-phase squirrel-cage type induction motor	(kW)	750/1500	1500/3000
3-phase transformer	(kVA)	1000/2000	2000/4000
Capacitor	(kVA)	1000/2000	2000/4000
Mass			
Fixed type (Normal energized)	(kg)	19	19
Draw-out type (Normal energized)	(kg)	34*2	34*2

□*1: Installation system
P: Fixed type
X: Draw-out type
H: Draw-out type/Bushing type connector
Y: Draw-out type/Bushing type connector+shutter
(X, Y, H: With fuse holder)

*2:Without VT and cradle

Vacuum magnetic contactors
HN series

■ Operating coil voltage and current

● Normal energized type

Type	Rated operating voltage (V) *	Current (A) Closing	Holding
HN46A□-2S1, 4S1	100–110 AC	3	0.05
	100–110 DC	3	0.05
HN46A□-2S2, 4S2	200–220 AC	1.5	0.03
	200–220 DC	1.5	0.03
HN46A□-S4, 4S4	48 DC	8	0.1

● Mechanically-latched type

Type	Rated operating voltage (V) *	Current (A) Closing	Trip
HN46A□-2L1, 4L1	100–110 AC	3	3.5
	100–110 DC	3	3
HN46A□-2L2, 4L2	200–220 AC	1.5	2.2
	200–220 DC	1.5	2
HN46A□-2L3, 4L3	21–24 DC	16	8.5
HN46A□-2L4, 4L4	48 DC	8	4.5

■ Ratings of auxiliary switch (Built-in)

Contact arrangement	3NO+3NC	
Operating current	Res. Load	Ind. Load
100/110V AC	–	6A
200/220V AC	–	6A
48V DC	6A	6A
100/110V DC	2.5A	1.3A
200/220V DC	1A	0.45A

■ Types / Fixed types

Installation system	Operating system	Rated voltage (kV)	Rated current (A)	Appropriate fuse type	Operating coil voltage (V) AC	DC	Type
Fixed type (P)	Normal energized	3.3/6.6	200	–	100–110	100–110	**HN46AP-2S1**
					200–220	200–220	**HN46AP-2S2**
					–	48	**HN46AP-2S4**
		3.3/6.6	400	–	100–110	100–110	**HN46AP-4S1**
					200–220	200–220	**HN46AP-4S2**
					–	48	**HN46AP-4S4**
	Mechanically latched	3.3/6.6	200	–	100–110	100–110	**HN46AP-2L1**
					200–220	200–220	**HN46AP-2L2**
					–	21–24	**HN46AP-2L3**
					–	48	**HN46AP-2L4**
		3.3/6.6	400	–	100–110	100–110	**HN46AP-4L1**
					200–220	200–220	**HN46AP-4L2**
					–	21–24	**HN46AP-4L3**
					–	48	**HN46AP-4L4**

■ Types / Draw-out types

Installation system	Operating system	Rated voltage (kV)	Rated current (A)	Appropriate fuse type	Operating coil voltage (V) AC	DC	Type
Draw-out (X)	Normal energized	3.3/6.6	200	JC-6/5 JC-6/10 JC-6/30 JC-6/40 JC-6/50 JC-6/60 JC-6/75 JC-6/100*	100–110	100–110	**HN46AX-2S1J**
					200–220	200–220	**HN46AX-2S2J**
					–	48	**HN46AX-2S4J**
	Mechanically latched	3.3/6.6	200		100–110	100–110	**HN46AX-2L1J**
					200–220	200–220	**HN46AX-2L2J**
					–	21–24	**HN46AX-2L3J**
					–	48	**HN46AX-2L4J**

* Provided fuse holder: K. *See page E2-68* (Type number nomenclature)

■Type / Draw-out types

Installation system	Operating system	Rated voltage (kV)	Rated current (A)	Appropriate fuse type	Operating coil voltage (V) AC	DC	Type
Draw-out (X)	Normal energized	3.3/6.6	200	HF338E/3/20–100 HF338E/6/20, 30	100–110 200–220 –	100–110 200–220 48	**HN46AX-2S1A** **HN46AX-2S2A** **HN46AX-2S4A**
				HF338E/3/150, 200 HF338E/6/40–200	100–110 200–220 –	100–110 200–220 48	**HN46AX-2S1B** **HN46AX-2S2B** **HN46AX-2S4B**
				JB-3/50–200 JB-6/20, 50	100–110 200–220 –	100–110 200–220 48	**HN46AX-2S1C** **HN46AX-2S2C** **HN46AX-2S4C**
	Mechanically latched	3.3/6.6	200	HF338E/3/20–100 HF338E/6/20, 30	100–110 200–220 – –	100–110 200–220 21–24 48	**HN46AX-2L1A** **HN46AX-2L2A** **HN46AX-2L3A** **HN46AX-2L4A**
				HF338E/3/150, 200 HF338E/6/40–200	100–110 200–220 – –	100–110 200–220 21–24 48	**HN46AX-2L1B** **HN46AX-2L2B** **HN46AX-2L3B** **HN46AX-2L4B**
				JB-3/50–200 JB-6/20, 50	100–110 200–220 – –	100–110 200–220 21–24 48	**HN46AX-2L1C** **HN46AX-2L2C** **HN46AX-2L3C** **HN46AX-2L4C**
Draw-out/ bushing type connector (H)	Normal energized	3.3/6.6	200	HF338E/3/20–100 HF338E/6/20, 30	100–110 200–220 –	100–110 200–220 48	**HN46AH-2S1A** **HN46AH-2S2A** **HN46AH-2S4A**
				HF338E/3/150, 200 HF338E/6/40–200	100–110 200–220 –	100–110 200–220 48	**HN46AH-2S1B** **HN46AH-2S2B** **HN46AH-2S4B**
				JB-3/50–200 JB-6/20, 50	100–110 200–220 –	100–110 200–220 48	**HN46AH-2S1C** **HN46AH-2S2C** **HN46AH-2S4C**
	Mechanically latched	3.3/6.6	200	HF338E/3/20–100 HF338E/6/20, 30	100–110 200–220 – –	100–110 200–220 21–24 48	**HN46AH-2L1A** **HN46AH-2L2A** **HN46AH-2L3A** **HN46AH-2L4A**
				HF338E/3/150, 200 HF338E/6/40–200	100–110 200–220 – –	100–110 200–220 21–24 48	**HN46AH-2L1B** **HN46AH-2L2B** **HN46AH-2L3B** **HN46AH-2L4B**
				JB-3/50–200 JB-6/20, 50	100–110 200–220 – –	100–110 200–220 21–24 48	**HN46AH-2L1C** **HN46AH-2L2C** **HN46AH-2L3C** **HN46AH-2L4C**
Draw-out/ bushing type connector+ shutter (Y)	Normal energized	3.3/6.6	200	HF338E/3/20–100 HF338E/6/20, 30	100–110 200–220 –	100–110 200–220 48	**HN46AY-2S1A** **HN46AY-2S2A** **HN46AY-2S4A**
				HF338E/3/150, 200 HF338E/6/40–200	100–110 200–220 –	100–110 200–220 48	**HN46AY-2S1B** **HN46AY-2S2B** **HN46AY-2S4B**
				JB-3/50–200 JB-6/20, 50	100–110 200–220 –	100–110 200–220 48	**HN46AY-2S1C** **HN46AY-2S2C** **HN46AY-2S4C**
	Mechanically latched	3.3/6.6	200	HF338E/3/20–100 HF338E/6/20, 30	100–110 200–220 – –	100–110 200–220 21–24 48	**HN46AY-2L1A** **HN46AY-2L2A** **HN46AY-2L3A** **HN46AY-2L4A**
				HF338E/3/150, 200 HF338E/6/40–200	100–110 200–220 – –	100–110 200–220 21–24 48	**HN46AY-2L1B** **HN46AY-2L2B** **HN46AY-2L3B** **HN46AY-2L4B**
				JB-3/50–200 JB-6/20, 50	100–110 200–220 – –	100–110 200–220 21–24 48	**HN46AY-2L1C** **HN46AY-2L2C** **HN46AY-2L3C** **HN46AY-2L4C**

Vacuum magnetic contactors
HN series

■ Type number nomenclature

HN 46A X – 2 S 2 A / □□□□□□

Basic type
Breaking capcity 4kA
Rated voltage 3.3/6.6kV

Installation system
P: Fixed type
X: Draw-out type
H: Draw-out type/Bushing type connector
Y: Draw-out type/Bushing type connector with shutter

Rated current
2: 200A
4: 400A

Operating system
S: Normal energized type
L: Mechanically latched type

Operating coil voltage (Closing/Trip)
1: 100–110V AC, 100–110V DC
2: 200–220V AC, 200–220V DC
3: 21–24V DC (Mechanically latched type only)
4: 48V DC
5: Closing 100-110V AC, 100–110V DC
Trip 200–220V AC, 200–220V DC
6: Closing 200–220V AC, 200–220V DC
Trip 100-110V AC, 100–110V DC
7: Other voltage
Specify operating voltage when ordering

Name plate
Blank : Japanese (JEM)
ZJ : English (JEM)
ZC : English (IEC)
ZA : English (AS)
ZB : English (BS)

Board-side lead wire
Blank : Board-side lead wire included
K : Plug only

Auxiliary circuit breaking part
Blank : Standard
T : Terminal block (fixed type only)
L : Auxiliary circuit plug interlock

Position switch
S1 : SPDT contacts for operating position and test position
S2 : 2PDT contacts for operating position and test position
Blank : No position switch

Bushing CT (BCT) (Optional accessories)*
For Y, H types
A to K *(Specify BCT code when ordering, see page E2-69 (2))*

VT (Optional accessories)*
For X, Y, H types
P1 to PA *(Specify VT code when ordering, see page E2-69 (1))*

Fuse holder type (For X, Y, H types)
A: For HF338E/3/20–100 or HF338E/6/20, 30 fuse
B: For HF338E/3/150, 200 or HF338E/6/40–200 fuse
C: For JB-3/50–200 or JB-6/20, 50 fuse
D: For JB-6/100–200 fuse
J: For JC-6/5–75 fuse
K: For JC-6/100 fuse

■ Supplied accessories for draw-out types

● Mechanical interlock

1. When the contactor is closed, it is impossible to shift it from the service position to the test position.
2. Under the condition where the contactor is closed, it is impossible to change it from the test position to the service position.
3. At both the test and the service positions, the interlock pin will engage and so lock the contactor in position. Thus the positions are always fixed correctly. Even if a closing operation is carried out at an intermediate position, the contactor cannot be closed.

● Electrical interlock

When the interlock pin is locked at both the service and test positions the limit switch will be closed, and the contactor can be operated.

● Shutter

Cradle with bushing type connectors can also be provided with a shutter.

● On-off counter (6-digit)

An on-off counter is standard with all VCB series.
This easily legible counter enables quick estimation of remaining service life.

Ratings of interlock contact

Contact arrangement	SPDT	
Operating current	Res. Load	Ind. Load
250V AC	16A	10A
125V AC	16A	10A
125V DC	0.6A	0.3A

Ratings of fuse blown indicator

Contact arrangement	1NO + 1NC	
Operating current	Res. Load	Ind. Load
250V AC	16A	10A
250V DC	0.3A	0.06A
125V DC	0.6A	0.3A
30V DC	6A	4A

■ Optional accessories

● Position switches

Type:Position switch N1 (Ordering code:HZ1AD)
SPDT position switches can be fitted to indicate the test position and the service position. (For X, Y, H)

Ratings of position switch

Contact arrangement	Service pos. SPDT, Test pos. SPDT Service pos. 2PDT, Test pos. 2PDT	
Operating current	Res. Load	Ind. Load
250V AC/DC	3A	NC: 2A, NO: 1.5A
125V AC/DC	10A	NC: 7.5A, NO: 6A
30V DC	15A	10A
14V DC	15A	NC: 15A, NO: 10A

● VT and bushing CT (BCT)

Draw-out types have room for fitting VTs in the space box.
It is possible to fit up to 2 VTs in the space. 3 BCTs can be fitted to the bushing type connector. The ratings are shown in the Table.

Ratings of VT

For VT	For control power supply *
3300V/110V, 220V 1.0 class 100VA	3300V/110V, 220V 400VA
6600V/110V, 220V 1.0 class 100VA	6600V/110V, 220V 400VA

* When used as control power supply, it becomes short-time rating.

Ratings of BCT

Max. voltage (kV)	Frequency (Hz)	Primary current(A)	Secondary current(A)	Burden (VA)	Overcurrent capacity
6.9	50/60	20, 30, 40, 50 75, 100, 150 200, 300, 400	5	25	40 times, 1 sec

● Capacitor trip devices

Type	Ordering code	Tripping time after power failure:	Input voltage	Tripping coil voltage
VS-T1A	HZ1NI	30 sec.	100–110V AC	100–110V DC
VS-T2A	HZ1NJ		200–220V AC	200–220V DC

● C-R type surge absorber

Type	Ordering code	Max. operating voltage	Frequency	Rated voltage
AF3320R3C5R	HZ1BK	115% rated voltage	50/60Hz	$\frac{3.3kV}{\sqrt{3}}$
AF6620R3C5R	HZ1BL		50/60Hz	$\frac{6.6kV}{\sqrt{3}}$

Dimensions,mm/Surge absorber

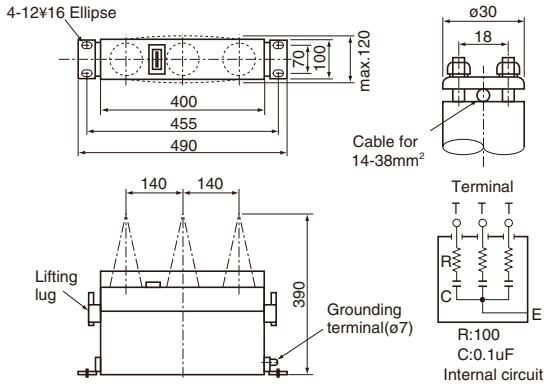

Codes of VTs and BCTs for draw-out types

(1) VT (For X, Y, H)			(2) BCT (For Y, H)					
Code	Voltage	No. of VTs	Code	Current	No. of BCTs	Code	Current	No. of BCTs
P1	3.3kV/110V	1	A2	20/5A	2	F2	100/5A	2
P2	3.3kV/110V	2	A3	20/5A	3	F3	100/5A	3
P3	6.6kV/110V	1	B2	30/5A	2	G2	150/5A	2
P4	6.6kV/110V	2	B3	30/5A	3	G3	150/5A	3
P5	3.3kV/220V	1	C2	40/5A	2	H2	200/5A	2
P6	3.3kV/220V	2	C3	40/5A	3	H3	200/5A	3
P7	6.6kV/220V	1	D2	50/5A	2	J2	300/5A	2
P8	6.6kV/220V	2	D3	50/5A	3	J3	300/5A	3
P9	3.3kV/110V	1	E2	75/5A	2	K2	400/5A	2
	3.3kV/220V	1	E3	75/5A	3	K3	400/5A	3
						Blank	Without BCT	
PA	6.6kV/110V	1						
	6.6kV/220V	1						
Blank	Without VT							

- Mounting position of CT
  2 CTs-Fit to U and W poles
  3 CTs- Fit to U, V and W poles

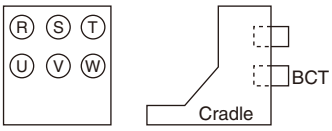

Example:
- Two 6.6kV/110V VTs and no BCT
  HN46A□–□□□□/P4
- No VT and two 50/5A BCTs
  HN46A□–□□□□/D2
- Two 6.6kV/110V VTs and two 50/5A BCTs
  HN46A□–□□□□/P4D2

Vacuum magnetic contactors
HN series

■ Optional accessories

● Power fuses for draw-out types

The table indicates the appropriate current limiting fuses for use with HN vacuum magnetic contactors.

System voltage (kV)	Type Refer to the Table below	Ratings Voltage (kV)	Breaking capacity (kA)	Minimum breaking current(A)	Current (A)	Applicable load (max) 3ϕ Motor Squirrel-cage type(kW)	Wound-rotor type(kW)	3ϕ Transformer (kVA)	3ϕ Capacitor (kVA)
3.3	**HF338E/3/20**	3.6	40	All	20	–	55	50	30
	HF338E/3/30		(250MVA)	excessive	30	–	90	100	75
	HF338E/3/40			currents	40	37	132	150	100
	HF338E/3/50				50	55	160	200	150
	HF338E/3/75				75	90	250	300	250
	HF338E/3/100				100	132	355	400	400
	HF338E/3/150				150	200	450	500	500
	HF338E/3/200				200	355	630	750	750
	JB-3/50	3.6	40	350	50	160	200	250	–
	JB-3/100		(250MVA)	700	100	355	355	500	–
	JB-3/150			1050	150	560	560	750	–
	JB-3/200			1400	200	710	710	1000	–
	JC-6/5	3.6	40	11	5	–	–	5	5
	JC-6/10		(250MVA)	22	10	–	–	15	15
	JC-6/20			58	20	–	–	50	30
	JC-6/30			85	30	–	–	100	50
	JC-6/40			120	40	–	–	150	75
	JC-6/50			140	50	–	–	200	100
	JC-6/60			170	60	–	–	250	150
	JC-6/75			250	75	–	–	300	200
	JC-6/100			400	100	–	–	500	250
6.6	**HF338E/6/20**	7.2	40	All	20	–	110	75	75
	HF338E/6/30		(500MVA)	excessive	30	37	160	150	150
	HF338E/6/40			currents	40	75	315	250	200
	HF338E/6/50				50	90	375	300	300
	HF338E/6/75				75	160	530	500	500
	HF338E/6/100				100	250	750	750	750
	HF338E/6/150				150	375	1050	1000	1000
	HF338E/6/200	7.2	31.5 (390MVA)	1000	200	530	1500	1500	1500
	JB-6/20	7.2	40	140	20	160	200	200	150
	JB-6/50		(500MVA)	350	50	355	355	500	500
	JB-6/100			700	100	710	710	1000	750
	JB-6/150			1050	150	1000	1000	1500	1000
	JB-6/200			1400	200	1500	1500	2000	1500
	JC-6/5	7.2	40	11	5	–	–	15	15
	JC-6/10		(500MVA)	22	10	–	–	30	30
	JC-6/20			58	20	–	–	100	50
	JC-6/30			85	30	–	–	200	100
	JC-6/40			120	40	–	–	300	150
	JC-6/50			140	50	–	–	300	200
	JC-6/60			170	60	–	–	500	300
	JC-6/75			250	75	–	–	750	400
	JC-6/100			400	100	–	–	1000	500

Notes: JB fuse: The rated current value meets the requirements of JEC-2330 (1986) M (motor).
HF and JC fuses: The rated current value meets the requirements of JEC-2330 (1986)G (general).
Contact FUJI when the JC fuse will be used for a motor load application.

Fuse and fuse holder

Fuse holder Type number 10th character	Fuse Type	Ordering code
A	**HF338E/3/20**	HF1E-020
	HF338E/3/30	HF1E-030
	HF338E/3/40	HF1E-040
	HF338E/3/50	HF1E-050
	HF338E/3/75	HF1E-075
	HF338E/3/100	HF1E-100
	HF338E/6/20	HF2E-020
	HF338E/6/30	HF2E-030

Fuse holder Type number 10th character	Fuse Type	Ordering code
B	**HF338E/3/150**	HF1E-150
	HF338E/3/200	HF1E-200
	HF338E/6/40	HF2E-040
	HF338E/6/50	HF2E-050
	HF338E/6/75	HF2E-075
	HF338E/6/100	HF2E-100
	HF338E/6/150	HF2E-150
	HF338E/6/200	HF2E-200
C	**JB-3/50**	HF1B-050
	JB-3/100	HF1B-100
	JB-3/150	HF1B-150
	JB-3/200	HF1B-200
	JB-6/20	HF2B-020
	JB-6/50	HF2B-050

Fuse holder Type number 10th character	Fuse Type	Ordering code
D	**JB-6/100**	HF2B-100
	JB-6/150	HF2B-150
	JB-6/200	HF2B-200
J	**JC-6/5**	HF2C-005
	JC-6/10	HF2C-010
	JC-6/20	HF2C-020
	JC-6/30	HF2C-030
	JC-6/40	HF2C-040
	JC-6/50	HF2C-050
	JC-6/60	HF2C-060
	JC-6/75	HF2C-075
	JC-6/100	HF2C-100

■ Optional accessories

( ): Ordering code

Connector with external lead wires (HZ1NH)

Testing jumper (HZ1NG) SP–162

KKD17-062

Vacuum condition tester VC-1A (HZ1AM)

KK03-080

Lifting dolly L-2HNB (HZ2NB) (For X, Y, H)

■ Dimensions,mm

● Fixed type
• P type

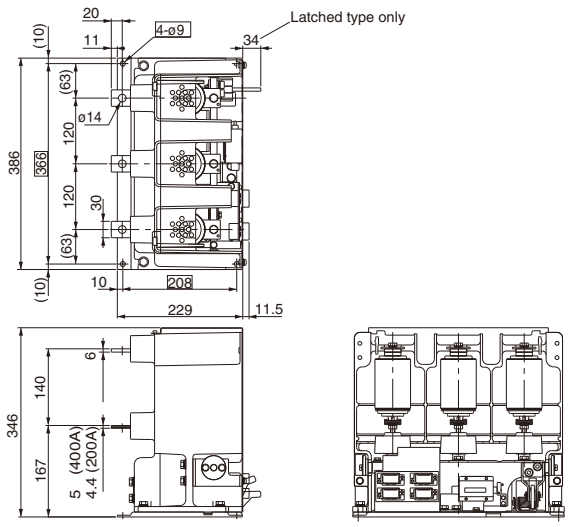

● Draw-out type
• X type

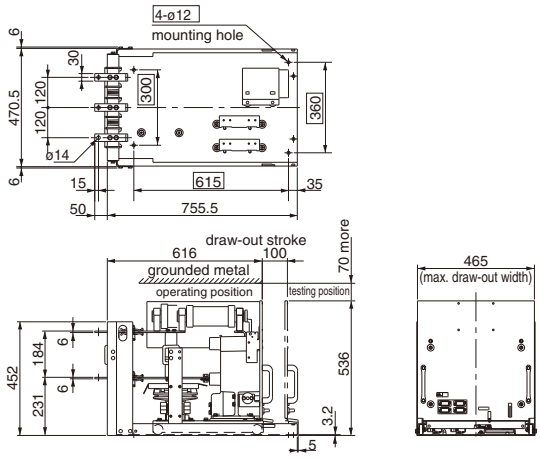

● Draw-out type
• Y and H types

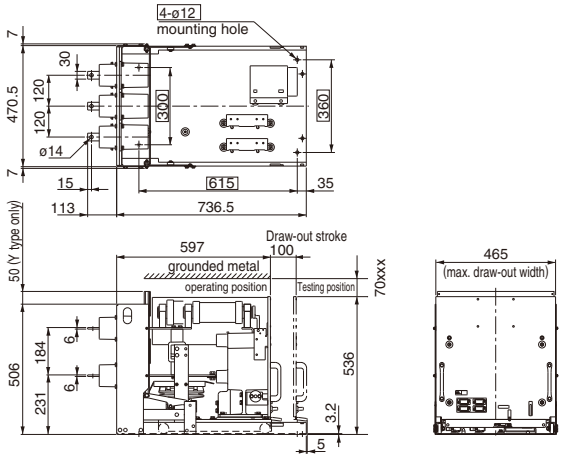

● Draw-out type (with BCT)
• Y and H types

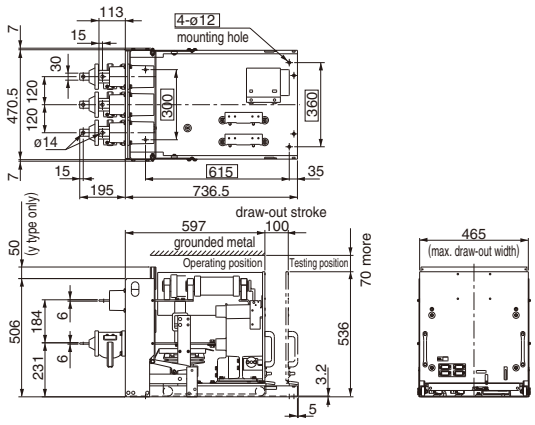

Vacuum magnetic contactors
HN series

■ Wiring diagrams

Normal energized type

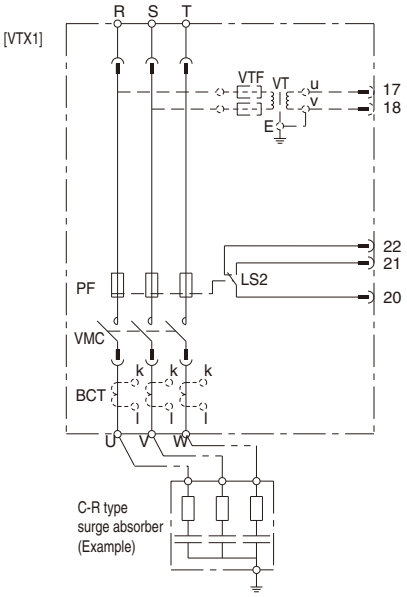

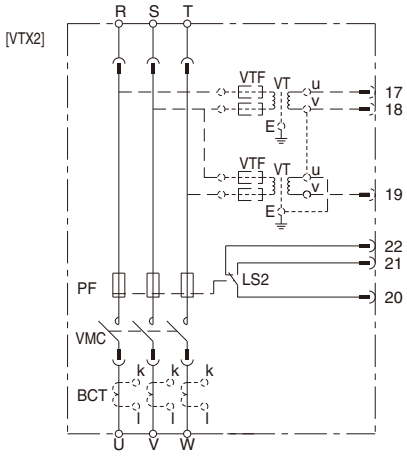

VS: Vacuum contactor
52: Auxiliary contact for vacuum contactor
52C: Closing coil
IC: IC-control device
LS1: Limit switch for interlock
MCX: Auxiliary relay for closing
PF: Power fuse (Optional accessories)
SW: Power fuse blown indicating contact
VT: VT
VTF: Fuse for VT
BCT: Bushing type CT

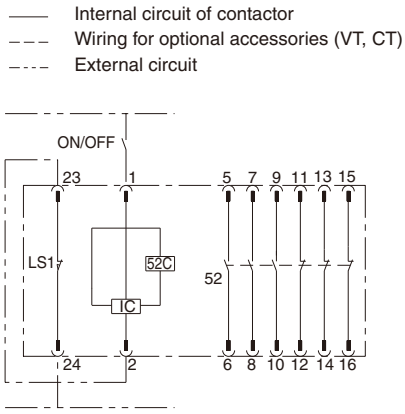

Wiring diagram for extenal relay cicuit (Example)

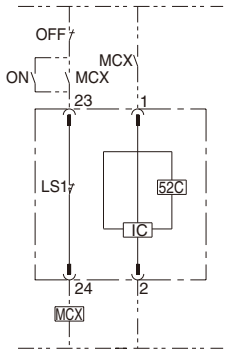

■ Terminal numbers

	Fixed type	Draw-out types Without VT	With one VT	With two VTs
Red	1 2	1 2 23 24	1 2 23 24	1 2 23 24
Yellow	5 6 7 8 9 10	5 6 7 8 9 10	5 6 7 8 9 10	5 6 7 8 9 10
Blue	11 12 13 14 15 16	11 12 13 14 15 16	11 12 13 14 15 16	11 12 13 14 15 16
Green		20 21 22	17 18 20 21 22	17 18 19 20 21 22

■ Wiring diagrams

Mechanically-latched type

—— Internal circuit of contactor
– – – Wiring for optional accessories (VT, CT)
– - – - External circuit

Note: IC control device is provided with protection circuit from an anti-pumping.

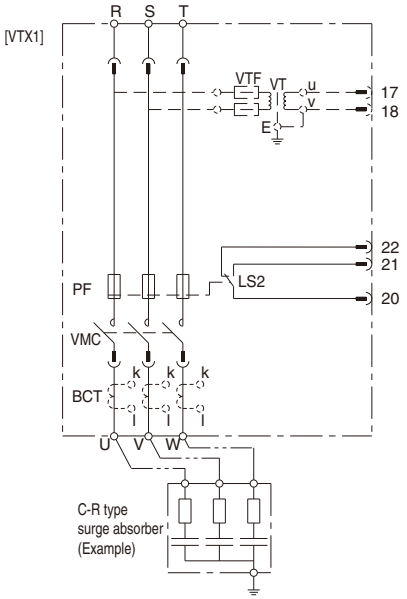

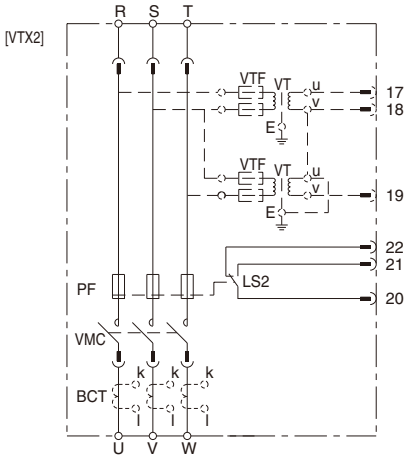

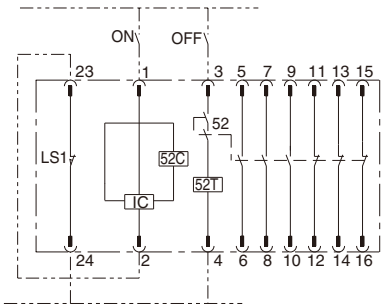

Wiring diagram for extenal relay circuit (Example)

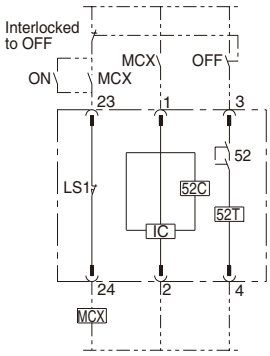

Wiring diagram connected to capacitor trip device (Optional)

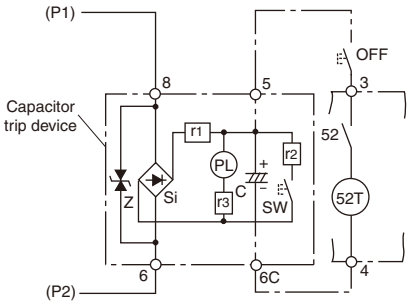

VS:	Vacuum contactor
52:	Auxiliary contact for vacuum contactor
52T:	Tripping coil
52C:	Closing coil
52Z:	Anti-pumping relay
IC:	IC-control device
LS1:	Limit switch for interlock
MCX:	Auxiliary relay for closing
PF:	Power fuse (Optional accessories)
SW:	Power fuse blown indication contact
VT:	VT
VTF:	Fuse for VT
BCT:	Bushing type CT

■ Terminal numbers

	Fixed type	Draw-out types Without VT	With one VT	With two VTs
Red	1 2 3 / 4	1 2 3 / 4 23 24	1 2 3 / 4 23 24	1 2 3 / 4 23 24
Yellow	5 6 7 / 8	5 6 7 / 8	5 6 7 / 8	5 6 7 / 8
Blue	11 12 13 / 14	11 12 13 / 14	11 12 13 / 14	11 12 13 / 14
Green		20 21 22	17 18 / 20 21 22	17 18 19 / 20 21 22

Protective Relays
QHA series

QH series protective relays

■ Description

FUJI overcurrent relays and voltage relays have inverse-time characteristics (induction and static types). The QHA series is compact budget priced version and is easily installed on panels. It is drum-shaped and ideally suited for general industrial applications.
The directional ground-fault relay (DG) is used, combined with zero-phase current transformer (ZCT) and zero-phase voltage transformer (ZVT).
The ground-fault relay (GR) is used, combined with zero-phase current transformer (ZCT).

KKD12-019
QHA-OC

KKD13-136
QHA-DG

AF91-267
ZCT

■ Specifications

● Overcurrent relays

Name			Overcurrent relay	
Type			**QHA-OC1**	**QHA-OC2**
Tripping method			Shunt tripping	Current transformer secondary current tripping
Rated current			5A	
Rated frequency			50 to 60 Hz (switching type)	
Time delay element	Operating current setting value		3 – 3.5 – 4 – 4.5 – 5 – 6 (A) – lock “L”	
	Time-delay setting		0.25 – 0.5 – 1 – 1.5 – 2 – 2.5 – 3 – 4 – 5 – 6 –7 – 8 – 10 – 15 – 20 – 30 (setting levels)	
	Operating characteristics		Super inverse time delay characteristic (EI) Strong inverse time delay characteristic (VI) Inverse time delay characteristic (NI) Definite time delay characteristic (DT)	
	Minimum time delay operating time		150 - 110 (ms)	
Instantaneous element	Operating value settings		10 - 15 - 20 - 25 - 30 - 40 - 50 - 60 - 80 (A) - lock “L”	
	Operating characteristics		2-step characteristic - 3-step characteristic (switching type)	
Indications	Running indication		LED indication (lights up green)	
	Operation indication		Magnetic inverse operation type: R phase, T phase, instantaneous (indicated by orange after operation start)	
	Character indication (Red LED)	Start indication *1	“00”	
		Elapsed time *1	10 – 20 – 30 – 40 – 50 – 60 – 70 – 80 – 90 (%)	
		Current value *2	R phase, T phase current transformer secondary current value 2.0 to 50 (A)	
		Setting value *3	Time delay current setting value, time delay time setting value, instantaneous current setting value	
		Self-monitoring	Abnormality error code indication	
Reset type	Output contact		Automatic reset at current drop	
	Operation indication		Manual reset	
Output contact			Trip contact 1NO, alarm contact 1NO	Trip contact 2NC, alarm contact 1NO
Contact capacity	Trip contact Shunt trip: (T1, T2) Current trip: (T1R, C2T2R) (T1T, C2T2T)		Contact closing: 100 V, 15 A DC (L/R=0 ms) 220 V, 10 A DC (L/R=0 ms) Contact opening: 100 V 0.2 A DC (L/R=7 ms) 220 V, 2.2 A AC (cos ϕ=0.4)	Contact opening: 110 V, 60 A AC (Differs depending on the CT load VA)
	Alarm contact (1NO, 2NO)		24 V, 2 A DC (Max. 125 V, 30 W DC) (L/R=7 ms) 100 V, 2 A AC (Max. 250 V, 220 VA AC) (cos ϕ=0.4)	
Consumption VA (at 5 A)		Steady state	4VA	
		Operating state	5VA	
Ambient temperature			-20°C to +50°C; provided that there is no condensation or ice (Max. usage temperature +60°C)	
Conformed standard			JIS C 4602 High-voltage power receiving overcurrent relay	
Mass			1kg	

*1) Displayed while selecting either “elapsed time”, “R phase elapse”, or “T phase elapse” when using the indication selection switching knob.
*2) Displayed while selecting either “current”, “R phase current”, or “T phase current” when using the indication selection switching knob.
*3) Displayed while selecting either “instantaneous current”, “time delay current”, or “time delay time” when using the indication selection switching knob. Furthermore, it is displayed for about 2 seconds when making settings.

● Voltage relays

Name			Overvoltage relay	Undervoltage relay
Type			**QHA-OV1**	**QHA-UV1**
Tripping method			Shunt tripping	
Rated control voltage			110 V AC	
Rated frequency *1, *2			50 to 60 Hz (switching type)	
Setting	Operating voltage *2		115 – 120 – 125 – 130 – 135 – 140 – 145 – 150 (V) – lock "L"	60 – 65 – 70 – 75 – 80 – 85 – 90 – 95 – 100 (V) – lock "L"
	Operating time *2		0.1 – 0.2 – 0.5 – 1 – 1.5 – 2 – 2.5 – 3 – 4 – 5 – 6 – 8 – 10 (s)	
Operating characteristics	Operating voltage		Setting value ±5%	
	Operating time		Setting value ±5% (However, 0.1 to 0.5 seconds is within ±50 ms)	
	Reset value		Operating value at 95% or higher	Operating value at 105% or lower
Indications	Running indication		LED indication (lights up green)	
	Start indication		LED indication (flashes red)	
	Operation indication		Magnetic inverse operation type (indicated by orange after operation start)	
	Character indication (indicated by red LED lighting up)	Start indication *3	"00"	
		Elapsed time *3	Elapsed time percentage value 10 – 20 – 30 – 40 – 50 – 60 – 70 – 80 – 90 (%)	
		Voltage value *4	75 to 160 (V); When over, "---"	55 to 130 (V); When over, "---"
		Setting value *5	Operating voltage setting value, operating time setting value	
		Frequency setting value *1	50, 60(Hz)	
		Reset type *1	0: Automatic 1: Manual	
		Enforced operation	OP: Indicates enforced operation selection state	
		Self-diagnosis check	CH: Self-diagnosable go: Normal state Error code indication: Abnormal state	
		Accident record	Automatically displays up to the last 5 accident values	
		Turns off	Indication turns off	
Reset type		Output contact *1, *2	Automatic reset: Automatic reset at setting value or below	Automatic reset: Automatic reset at setting value or higher
			Manual reset: Reset using the reset lever	
		Operation indication	Manual reset: Reset using the reset lever	
Output contact			Trip contact: 1NO Alarm contact: 1NO	Trip contact: 1NO-C-NC Alarm contact: 1NO-C-NC (Constant excitation type; during abnormal state/ power outage, NC contact ON)
Contact capacity	Trip contact QHA-OV1 (T1, T2) QHA-UV1 (Ta, Tb, Tc)		Contact closing: 100 V, 15 A DC (L/R=0 ms) 220 V, 10 A DC (L/R=0 ms)	Contact opening: 100 V, 0.25 A DC (L/R=7 ms) 220 V, 2.2 A AC (cos ϕ=0.4)
	Alarm contact QHA-OV1 (1NO, 2NO) *6 QHA-UV1 (NO, NC, NO-C-NC)		Contact closing: 100 V, 15 A DC (L/R=0 ms) 220 V, 10 A DC (L/R=0 ms)	Contact opening: 30 V 3 A, DC (Max. 125 V, 0.2 A DC) (L/R=7 ms) 125 V, 3 A AC (Max. 250 V, 2 A AC) (cos ϕ=0.4)
Consumption VA		Steady state	2VA	4VA
		Operating state	3VA	3VA
Ambient temperature			-20°C to +50°C; provided that there is no condensation or ice (Max. usage temperature +60°C)	
Test button			Equipped with enforced operation function	
Conformed standard			JEC-2511 voltage relay	
Mass			1kg	

*1) Set with the application condition setting switch.
*2) Displays the setting value for about 2 seconds when setting values with the application condition settings switch, operating voltage setting or operating time setting knob.
*3) Displays "elapsed time (%)" when making settings with the indication selection switching knob.
*4) Displays the "voltage (V)" when making settings with the indication selection switching knob. Indication accuracy ±5% (FS)
*5) Displays either the "operating voltage setting (V)" or "operating time setting (s)" when making settings with the indication selection switching knob.
*6) Alarm contact reset operation
(1) (Both automatic reset and manual reset) when control power is lost after the device trips
QHA-OV1: Automatically resets at about 150 ms
QHA-UV1: Maintains the NC contact closed state.
(2) (Automatic reset) when control power recovers normally after the device trips: Automatically resets at about 200 ms
(3) (Manual reset) when there is control power after the device trips: Maintains the NC contact closed state

■ Specifications

● Directional ground-fault relays

Name		Ground directional relay			
Type		**QHA-DG3**	**QHA-DG4**	**QHA-DG5**	**QHA-DG6**
Application *1		Power receiving	Branch	Power receiving	Branch
Tripping method		Shunt tripping		Current transformer secondary current tripping	
Control power		110 V AC/DC (85 to 132 V AC, 75 to 143 V DC)			
Rated frequency *2, *3		50 to 60 Hz (switching type)			
Setting	Zero-phase voltage (V_0) *3, *4	2.5 – 5 – 7.5 – 10 – 12.5 – 15 – 17.5 – 20 – 30 (%) – lock "L"		2.5 – 5 – 7.5 – 10 – 12.5 – 15 – 17.5 – 20 – 30 (%) – lock "L"	
Setting	Zero-phase current (I_0) *3	0.1 – 0.2 – 0.3 - 0.4 – 0.6 – 0.8 - 1 (A)			
Setting	Operating time *3	Instantaneous (0.1) – 0.2 – 0.3 – 0.4 – 0.5 – 0.6 – 0.7 – 0.8 – 0.9 – 1 (s)			
Setting	Maximum sensitivity phase angle/ operating phase angle *2, *3	Leading 45°/delay 45° ±15°, leading 135°±15° Leading 20°/ delay 70°±15°, leading 110°±15° Leading 30°/delay 60°±15°, leading 120°±15° Leading 60°/delay 30°±15°, leading 150°±15°			
Operating characteristics	Operating time	±30 ms at input of 130% the setting current value; -40 ms to +0 ms at input of 400% the setting current value (when applying a voltage at 150% the setting voltage value)			
Operating characteristics	Zero-phase voltage	Within ±25% the setting value (when applying a current at 150% the setting current value: ZVT combination)			
Operating characteristics	Zero-phase current	Within ±10% the operating value (when applying a voltage at 150% the setting voltage value)			
Indications	Running indication	LED indication (lights up green)			
Indications	Zero-phase voltage (V_0)	LED indication (lights up red)			
Indications	Zero-phase current (I_0)	LED indication (lights up red)			
Indications	Operation indication	Magnetic inverse operation type (indicated by orange after operation start)			
Indications	Character indication (indicated by red LED lighting up) — V0 voltage measurement value *5	0, 1.0 to 9.9, 10 to 40 (%)		0, 1.0 to 9.9, 10 to 40 (%)	
Indications	Character indication (indicated by red LED lighting up) — I0 current measurement value *5	0, 0.05 to 1.50 (A); When over, "---"			
Indications	Character indication (indicated by red LED lighting up) — Phase angle measurement *5	"---": V_0, I_0 setting value or lower; 0 to 359° (Step 1°): V_0, I_0 setting value or higher			
Indications	Character indication (indicated by red LED lighting up) — Start indication *6	"00"			
Indications	Character indication (indicated by red LED lighting up) — Elapsed time (%) *6	Elapsed time percentage value 10 – 20 – 30 – 40 – 50 – 60 – 70 – 80 – 90 (%)			
Indications	Character indication (indicated by red LED lighting up) — Setting value *7	V_0 voltage setting value, I_0 current setting value, operating time setting value			
Indications	Character indication (indicated by red LED lighting up) — Frequency setting value	50, 60(Hz)			
Indications	Character indication (indicated by red LED lighting up) — Reset type	0: Automatic 1: Manual			
Indications	Character indication (indicated by red LED lighting up) — Maximum sensitivity phase angle	00:45°, 10:20°, 01:30°, 11:60°			
Indications	Character indication (indicated by red LED lighting up) — Enforced operation	OP: Indicates enforced operation selection state			
Indications	Character indication (indicated by red LED lighting up) — Self-diagnosis check	CH: Self-diagnosable go: Normal state Error code indication: Abnormal state			
Indications	Character indication (indicated by red LED lighting up) — V_0 voltage accident record	Automatically displays up to the last 5 accident values		Automatically displays up to the last 5 accident values	
Indications	Character indication (indicated by red LED lighting up) — I_0 current accident record	Automatically displays up to the last 5 accident values			
Indications	Character indication (indicated by red LED lighting up) — Phase angle accident record	Automatically displays up to the last 5 accident values			
Indications	Character indication (indicated by red LED lighting up) — Turns off	Indication turns off			
Reset type	Output contact *2, *3	Automatic reset: Automatic reset at setting value or below; Manual reset: Reset using the reset lever			
Reset type	Operation indication	Manual reset: Reset using the reset lever			
Output contact		Trip contact: 1NO; Alarm contact: 1NO		Trip contact: 2NO-C-NC; Alarm contact: 1NO	
Contact capacity	Trip contact (QHA-DG3,DG4:T_1, T_2) (QHA-DG5,DG6: O_1, O_2, T_1, T_2, S_1, S_2)	Contact closing: 100 V, 15 A DC (L/R=0 ms) 220 V, 10 A DC (L/R=0 ms) Contact opening: 100 V, 0.25 A DC (L/R=7 ms) 220 V, 2.2 A AC (cos ϕ=0.4)		Contact closing: 100 V, 15 A DC (L/R=0 ms) 250 V, 10 A DC (L/R=0 ms) Contact opening: 100 V, 0.45 A DC (L/R=0 ms) 220 V, 5 A AC (cos ϕ=0.4)	
Contact capacity	Alarm contact (1NO, 2NO) *8	30 V, 3 A DC (Max. 125 V, 0.2 A DC) (L/R=7 ms) 125 V, 3 A AC (Max. 250 V, 2 A AC) (cos ϕ=0.4)			
Consumption VA	Steady state	3VA		3VA	
Consumption VA	Operating state	4.5VA		6VA	
Ambient temperature		-20°C to +50°C; provided that there is no condensation or ice (Max. usage temperature +60°C)			
Test button		Equipped with enforced operation function			
Conformed standard		JIS C 4609 high-voltage power receiving ground directional relay			
Mass		0.7kg		1.3kg	

*1) "Power receiving" relay for receiving voltage input from a ZVT, and "branch" relay for receiving zero-phase voltage from the "power receiving" relay.
*2) Set with the application condition setting switch.
*3) Displays the setting value for about 2 seconds when setting values with the application condition settings switch, zero-phase voltage setting, zero-phase current setting, or operating time setting knob.
*4) Proportion of the zero-phase voltage 3,810 V during complete ground fault for the 6.6 kV circuit.
*5) Indication accuracy: V0 voltage/I0 current measurement value ±5% (FS), phase angle measurement value ±15°.
*6) Displays the "elapsed time (%)" when making settings with the indication selection switching knob.
*7) Displayed while selecting either "V0 setting (%)", "I0 setting (A)", or "operating time setting (s)" when using the indication selection switching knob. However, QHA-DG4 and DG6 do not include the "V0 setting (%)" display.
*8) Alarm contact reset operation
(1) (Both automatic reset and manual reset) when control power is lost after the device trips: Automatically resets at about 100 ms.
(2) (Automatic reset) when control power is maintained after the device trips: Automatically resets at about 200 ms.
(3) (Manual reset) when control power is maintained after the device trips: Maintains the contact closed state.

● **Accessories, sold separately**

Zero-phase current transformers

Description	Primary current (A)	Rated primary voltage (kV)	Dielectric strength	Over-current constant	Type	Mass (kg)
Round-hole through-type	100	3.3/6.6	22kV AC 1 min.	40	**ZCT-561A**	0.5
	200				**ZCT-562A**	0.5
	300	50/60Hz common use			**ZCT-653**	0.8
	400				**ZCT-654**	0.8
	600				**ZCT-906**	3.0
Split-toroidal type	100				**ZCT-451D**	0.9
	400				**ZCT-654D**	1.2

Zero-phase voltage transformer

Type	**ZPD-2**
Structure	Indoor use, epoxi-resin insulator
Rated voltage	7.2kV
Electrostatic capacitance	3 x 250pF
Dielectric strength	Class 6A, 22kV AC (1 minute)
Mass (kg)	3.6kg (1set = 3pcs)

● **Ground-fault relays**

Name			Ground relay	
Type			**QHA-GR3**	**QHA-GR5**
Tripping method			Shunt tripping	Current transformer secondary current tripping
Rated control voltage			110 V AC (90 to 120 V AC)	
Rated frequency *1			50 to 60 Hz (switching type)	
Operating current setting value			0.1 – 0.2 – 0.4 – 0.6 – 0.8 (A)	
Operating time			0.1 to 0.3 seconds at input of 130% the setting current value; 0.1 to 0.2 seconds at input of 400% the setting current value	
Indications	Running indication		LED indication (lights up green)	
	Operation indication		Magnetic inverse operation type (indicated by orange after operation start)	
Reset type	Output contact *1		Automatic reset: Automatic reset at setting value or below; Manual reset: Reset using the reset lever	
	Operation indication		Manual reset: Reset using the reset lever	
Output contact			Trip contact: 1NO; Alarm contact: 1NO	Trip contact: 2NO-C-NC; Alarm contact: 1NO
Contact capacity	Trip contact (QHA-GR3:T1, T2) (QHA-GR5:O1, O2, T1, T2, S1, S2)		Contact closing: 100 V, 15 A DC (L/R=0 ms) 220 V, 10 A DC (L/R=0 ms) Contact opening: 100 V, 0.25 A DC (L/R=7 ms) 220 V, 2.2 A AC (cos ϕ=0.4)	Contact closing: 100 V, 15 A DC (L/R=0 ms) 250 V, 10 A DC (L/R=0 ms) Contact opening: 100 V, 0.45 A DC (L/R=7 ms) 220 V, 5 A AC (cos ϕ=0.4)
	Alarm contact (1NO, 2NO) *2		30 V, 3 A DC (Max. 125 V, 0.2 A DC) (L/R=7 ms) 125 V, 3 A AC (Max. 250 V, 2 A AC) (cos ϕ=0.4)	
Consumption VA		Steady state	2.5VA	2.5VA
		Operating state	3.5VA	4VA
Ambient temperature			-20°C to +50°C; provided that there is no condensation or ice (Max. usage temperature +60°C)	
Test button			Equipped with enforced operation function	
Conformed standard			JIS C 460 1 high-voltage power receiving ground relay	
Mass			1kg	1.5kg

*1) Set with the application condition setting switch.
*2) Alarm contact reset operation
(1) (Both automatic reset and manual reset) when control power is lost after the device trips: Automatically resets at about 80 ms.
(2) (Automatic reset) when control power is maintained after the device trips: Automatically resets at about 80 ms.
(3) (Manual reset) when control power is maintained after the device trips: Maintains the contact closed state.

■ Type number nomenclature

• Protective relays

QHA–OC 1

Basic type
QH: Static type

Relay type
OC1: Overcurrent relay (shunt trip)
OC2: Overcurrent relay (current trip)
OV1: Overvoltage relay
UV1: Undervoltage relay
DG3: Directional ground-fault relay (for receiving circuit)
DG4: Directional ground-fault relay (for branching circuit)
GR3A: Ground-fault relay

• Zero-phase current transformers

ZCT–561A

Basic type

Type of transformer (Hole-through diameter/Rated current)
561A: Hole-through type Ø56/100A
562A: Hole-through type Ø56/200A
653: Hole-through type Ø65/300A
654: Hole-through type Ø65/400A
906: Hole-through type Ø90/600A
451D: Split-toroidal type Ø45/100A
654D: Split-toroidal type Ø65/400A

• Zero-phase voltage transformer

ZPD–2

Zero-phase voltage transformer

■ Ordering information

Specify the following:
1. Type number
2. Rated control voltage and frequency
3. Rated current and frequency (Overcurrent relay)
4. Setting range (Volts or Amperes)

■ Dimensions, mm

● Relays

QHA-OC1, OC2, OV1, UV1, DG3, DG4, DG5, DG6, GR3, GR5

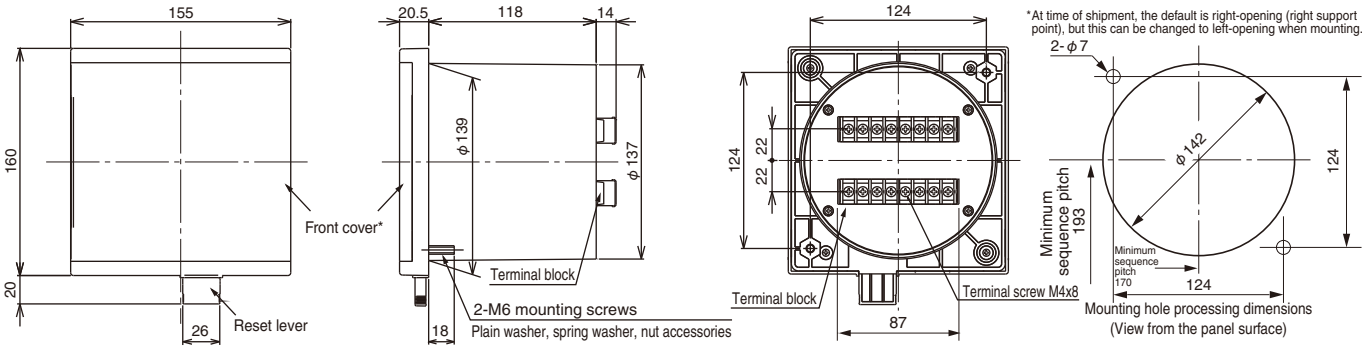

● Zero-phase current transformers

ZCT-561A, 562A

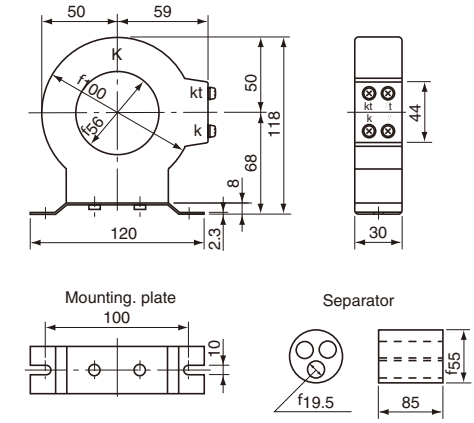

ZCT-906A

ZCT-906A type

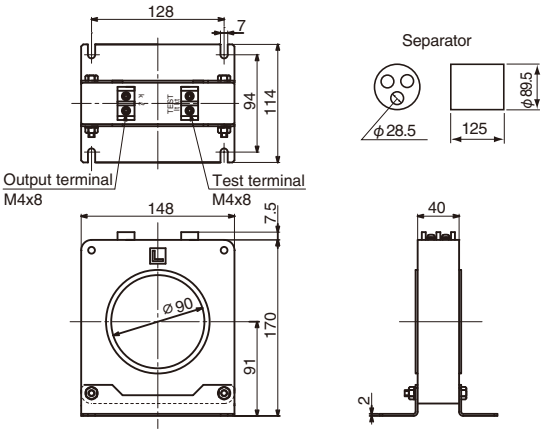

ZCT-653, 654

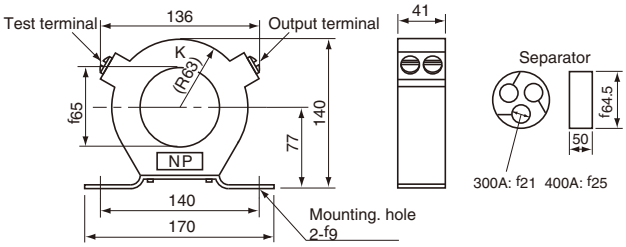

ZCT-451D, 654D

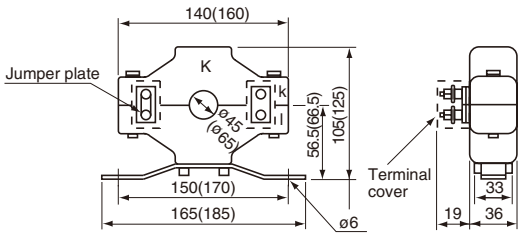

( ) : for ZCT-654D

● Zero-phase voltage transformer

ZPD-2

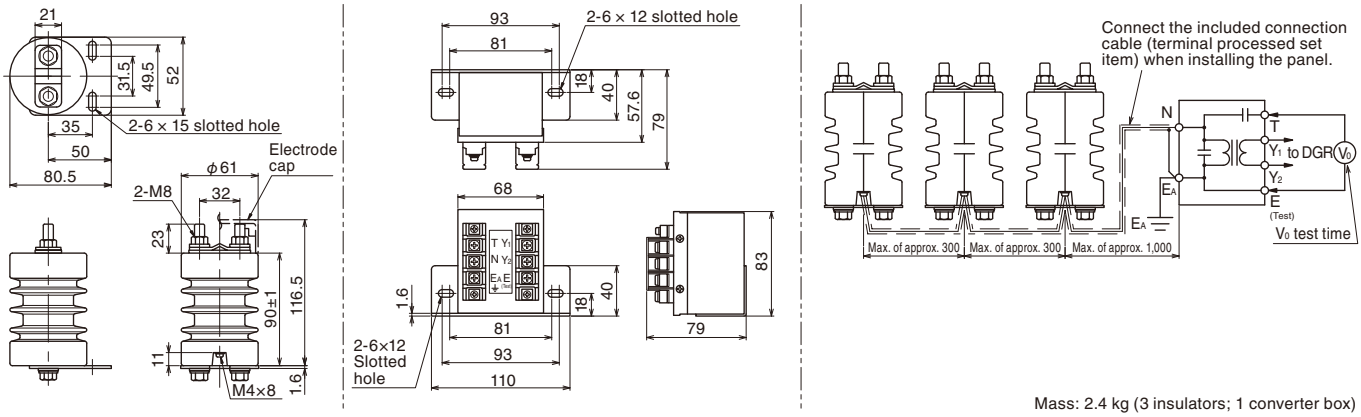

Mass: 2.4 kg (3 insulators; 1 converter box)

■ External wiring diagrams

QHA-OC1

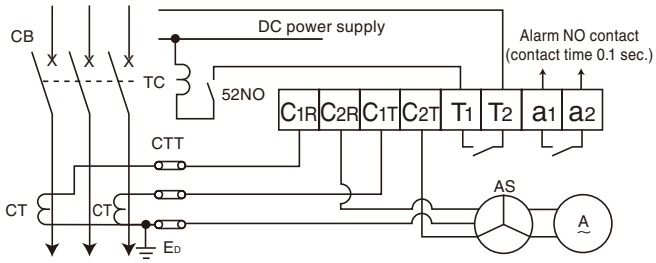

QHA-OC2

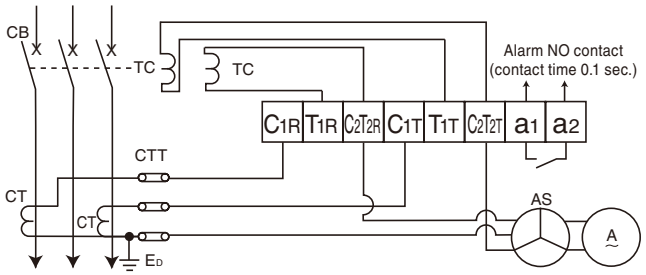

QHA-OV1

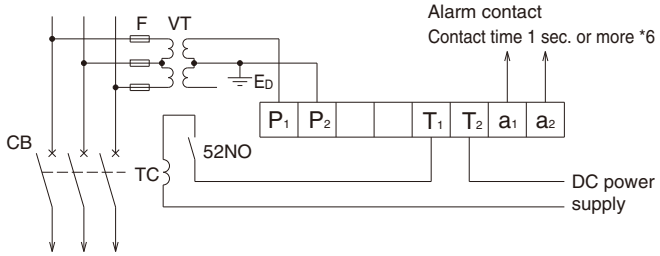

QHA-UV1

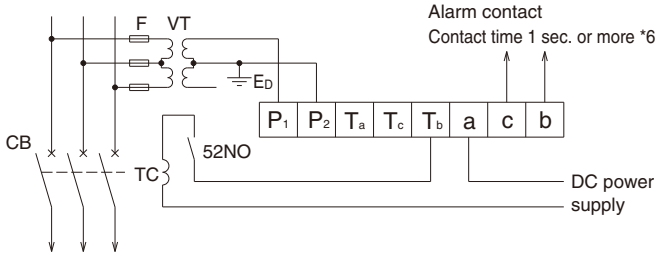

QHA-DG3

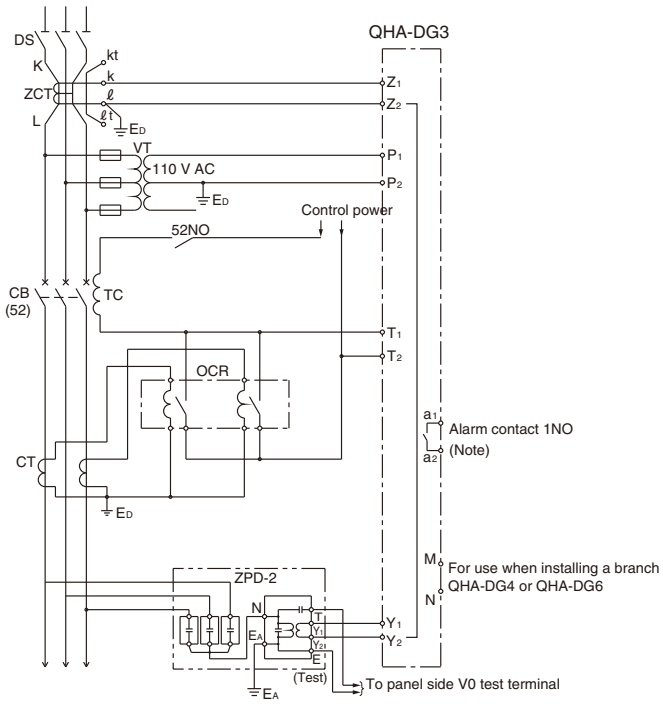

QH-DG5

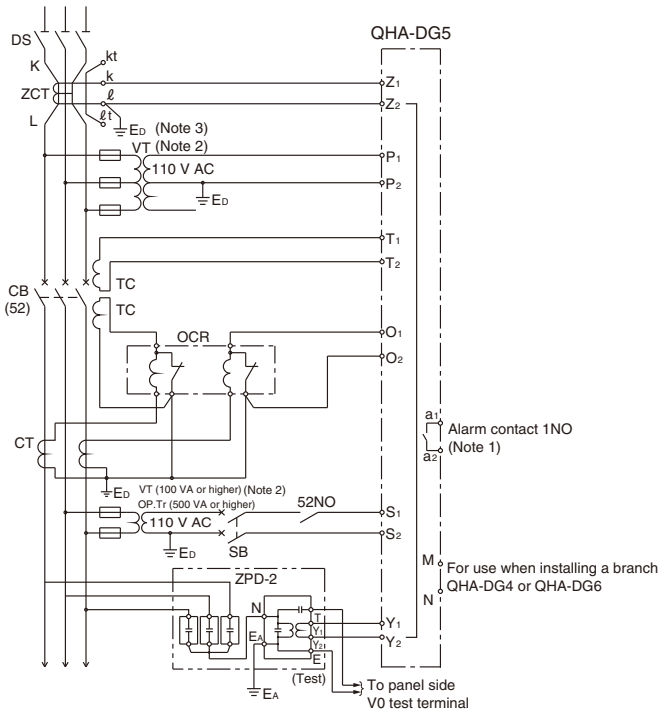

E2

■ External wiring diagrams

● When setting the power receiving or branch points

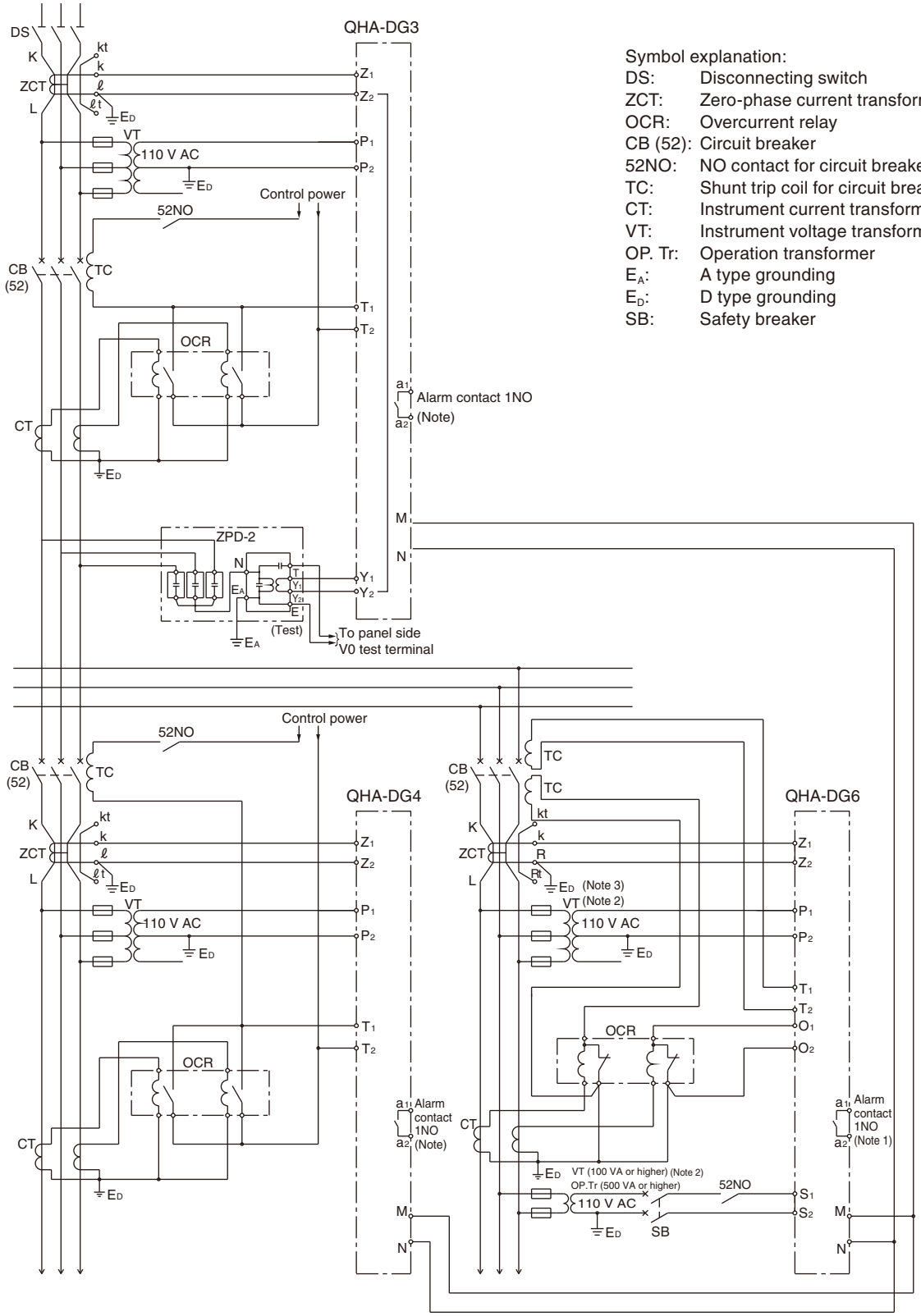

Symbol explanation:

DS:	Disconnecting switch
ZCT:	Zero-phase current transformer
OCR:	Overcurrent relay
CB (52):	Circuit breaker
52NO:	NO contact for circuit breaker
TC:	Shunt trip coil for circuit breaker
CT:	Instrument current transformer
VT:	Instrument voltage transformer
OP. Tr:	Operation transformer
E_A:	A type grounding
E_D:	D type grounding
SB:	Safety breaker

(Note 1) Refer to the ratings and specifications *8 on page E2-76.
(Note 2) P_1, P_2 VT and S_1, S_2 VT can be treated as a single VT.
The rated load for the VT is 100 VA or higher.
(Note 3) Since Z_2 and Y_2 are connected inside the relay, the Y_2 side does not need to be grounded when the Z_2 side is grounded, as shown in the above diagram.

■ External wiring diagrams

QHA-GR3

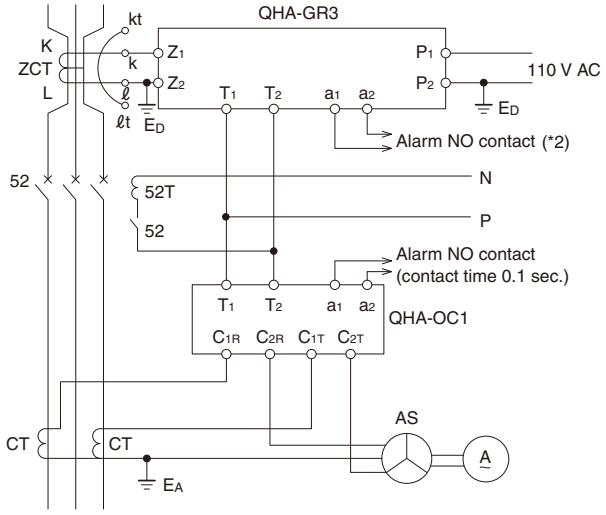

QHA-GR5

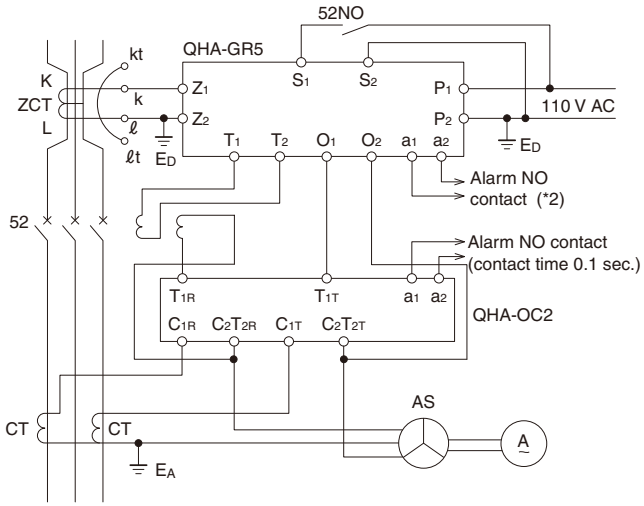

■ Internal wiring diagram

QHA-OV1

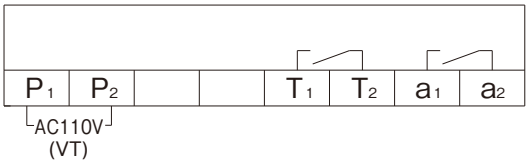

QHA-UV1

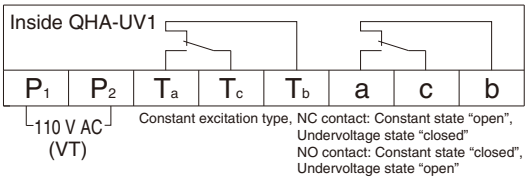

QHA-DG3

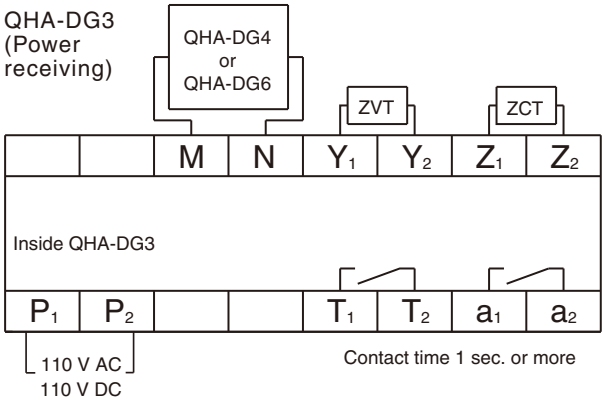

QHA-DG4

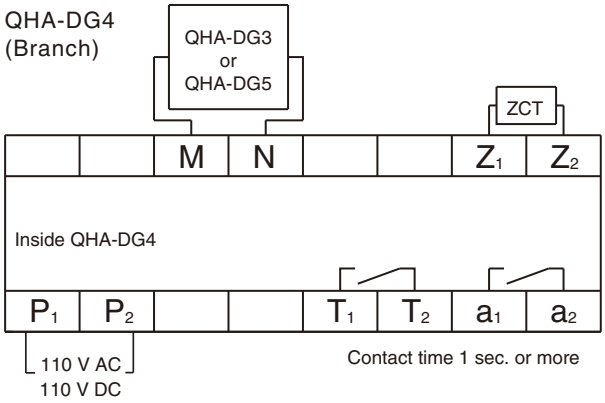

E2

QHA-DG5

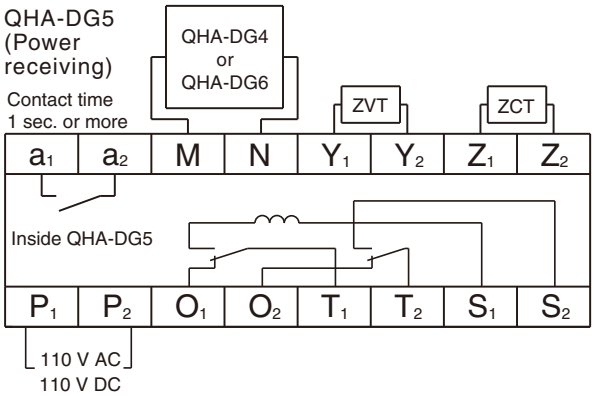

QHA-DG6

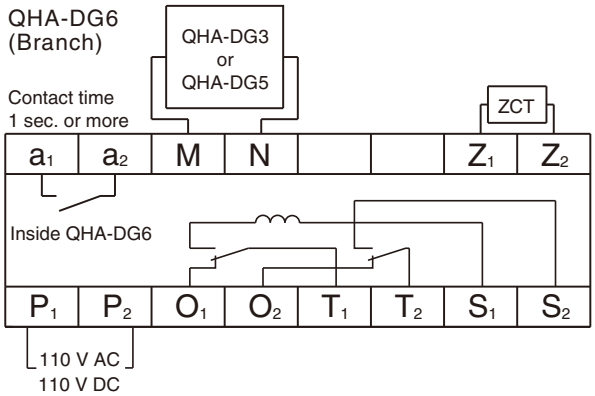

■ Characteristic curves

● **Super inverse time delay characteristic (EI)** Operating time $T = \frac{80}{I^2 - 1} \times \frac{D}{10}$

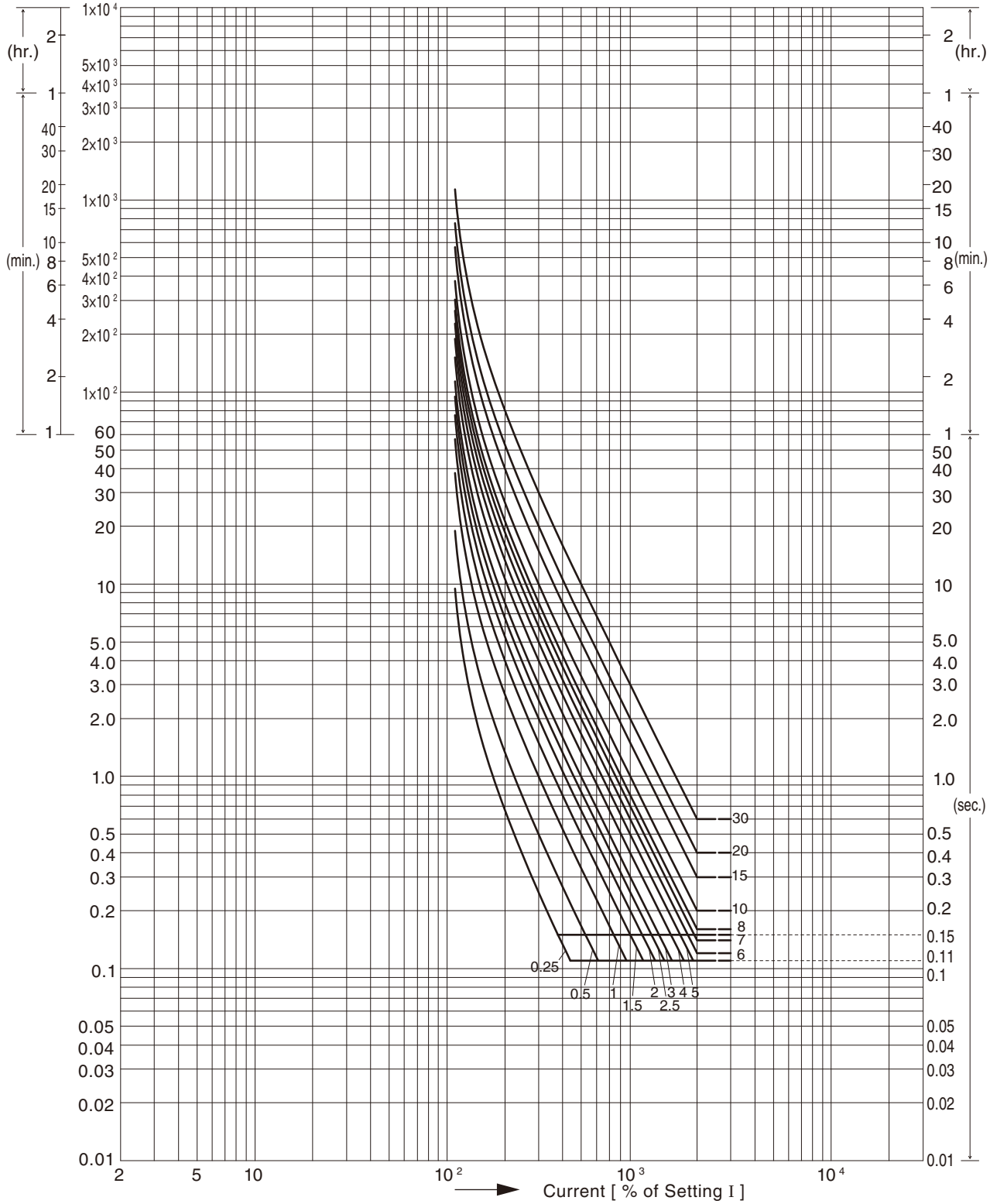

Protective Relays
QHA series

■ Characteristic curves

● **Strong inverse time delay characteristic (VI)** Operating time $T = \frac{13.5}{I - 1} \times \frac{D}{10}$

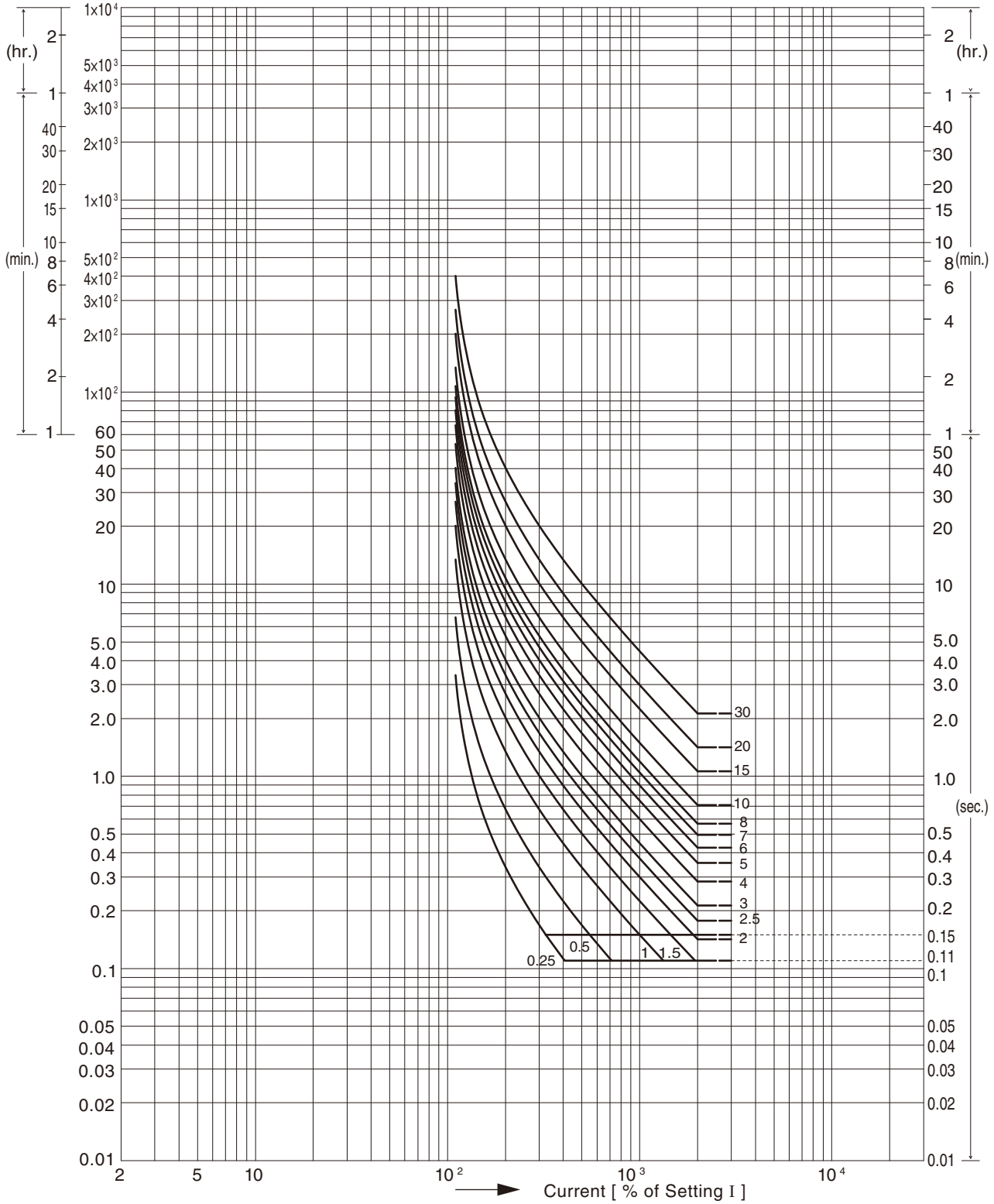

■ Characteristic curves

● **Inverse time delay characteristic (NI)** Operating time $T = \frac{0.14}{I^{0.02} - 1} \times \frac{D}{10}$

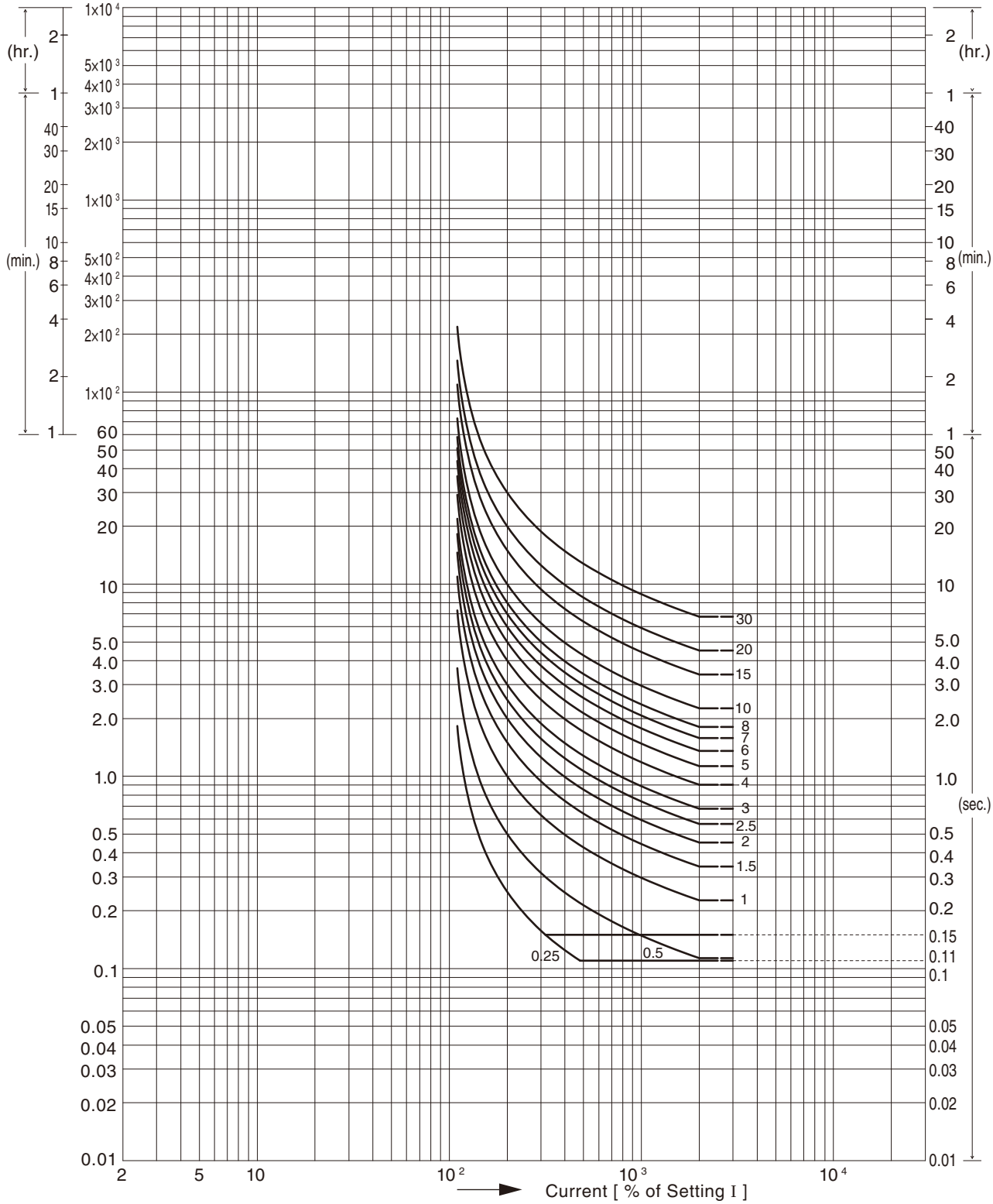

■ Characteristic curves

● Definite time delay characteristic (DT)

Operating time $T = 2 \times \frac{D}{10}$

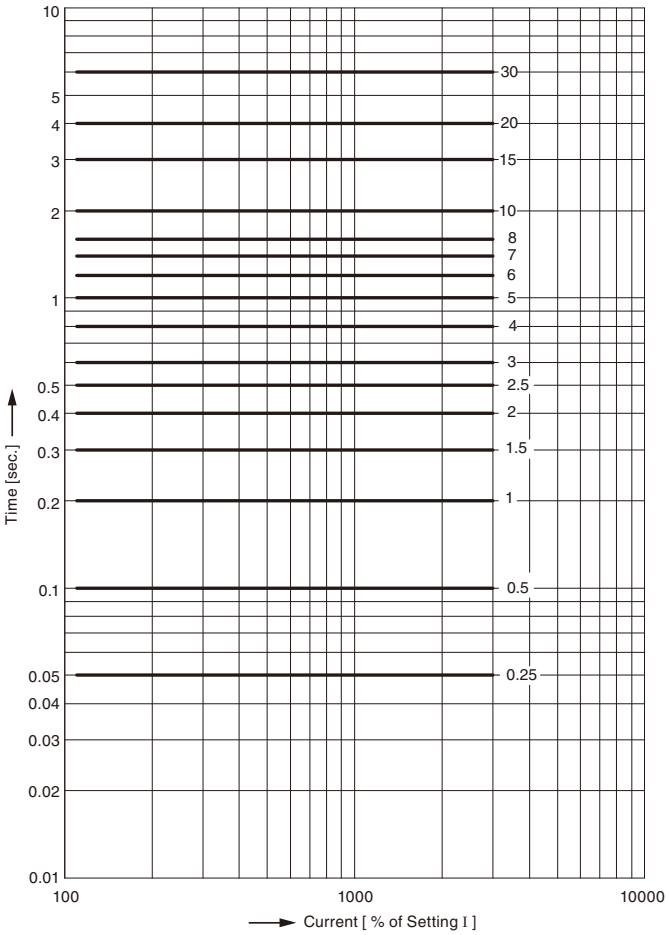

● Instantaneous characteristic

(Current ratio and time are fixed)

2-step characteristic

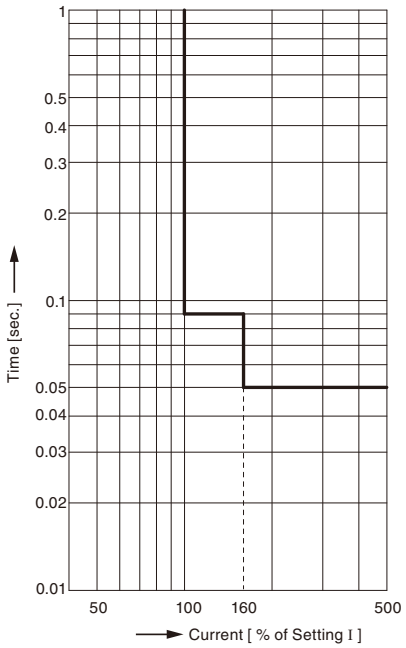

3-step characteristic

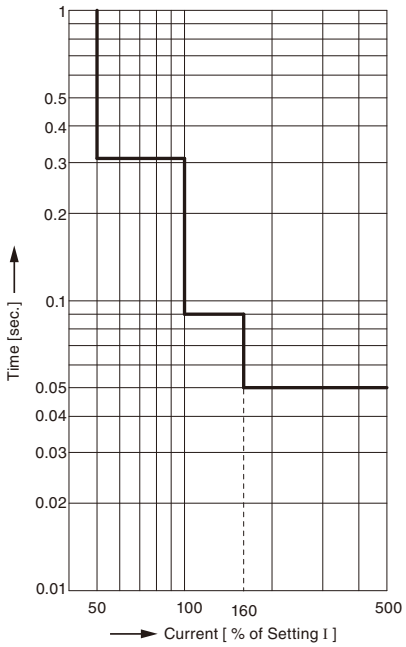

Catalog Disclaimer
The information contained in this catalog does not constitute an express or implied warranty of quality, any warranty of merchantability of fitness for a particular purpose is hereby disclaimed.

Since the user's product information, specific use application, and conditions of use are all outside of Fuji Electric FA Components & Systems'control, **it shall be the responsibility of the user to determine the suitability of any of the products mentioned for the user's application.**

One Year Limited Warranty
The products identified in this catalog shall be sold pursuant to the terms and conditions identified in the "Conditions of Sale" issued by Fuji Electric FA with each order confirmation.

Except to the extent otherwise provided for in the Conditions of Sale issued by Fuji Electric FA, Fuji Electric FA warrants that the Fuji Electric FA products identified in this catalog shall be free from significant defects in materials and workmanship provided the product has not been: 1) repaired or altered by others than Fuji Electric FA; 2) subjected to negligence, accident, misuse, or damage by circumstances beyond Fuji Electric FA's control; 3) improperly operated, maintained or stored; or 4) used in other than normal use or service. This warranty shall apply only to defects appearing within one (1) year from the date of shipment by Fuji Electric FA, and in such case, only if such defects are reported to Fuji Electric FA within thirty (30) days of discovery by purchaser. Such notice should be submitted in writing to Fuji Electric FA at 5-7, Nihonbashi Odemma-cho, Chuo-ku, Tokyo, Japan. The sole and exclusive remedy with respected to the above warranty whether such claim is based on warranty, contract, negligence, strict liability or any other theory, is limited to the repair or replacement of such product or, at Fuji Electric FA's option reimbursement by Fuji Electric FA of the purchase price paid to Fuji Electric FA for the particular product. **Fuji Electric FA does not make any other representations or warranties, whether oral or in writing, expressed or implied, including but not limited to any warranty regarding merchantability or fitness for a particular purpose.** Except as provided in the Conditions of Sale, no agent or representative of Fuji Electric FA is authorized to modify the terms of this warranty in writing or orally.

In no event shall Fuji Electric FA be liable for special, indirect or consequential damages, including but not limited to, loss of use of the product, other equipment, plant and power system which is installed with the product, loss of profits or revenues, cost of capital, or claims against the purchaser or user of the product by its customers resulting from the use of information, recommendations and descriptions contained herein. The purchaser agrees to pass on to its customers and users, in writing at the time inquiries and orders are received by buyer, Fuji Electric FA's warranty as set forth above.

⚠ **Caution "Safety precautions"**
- Operate (keep) in the environment specified in the operating instructions and manual. High temperature, high humidity, condensation, dust, corrosive gases, oil, organic solvents, excessive vibration or shock might cause electric shock, fire, erratic operation or failure.
- Follow the regulations of industrial wastes when the product is to be discarded.
- The products covered in this catalogs have not been designed or manufactured for use in equipment or systems which, in the event of failure, can lead to loss of human life.
- If you intend to use the products covered in this catalog for special applications, such as for nuclear energy control, aerospace, medical, or transportation, please consult our Fuji Electric FA agent.
- Be sure to provide protective measures when using the product covered in these catalogs in equipment which, in the event of failure, may lead to loss of human life or other grave results.
- Follow the directions of the operating instructions when mounting the product.

Distribution and Control Products Sales Centers

Sales area **China**

Fuji Electric (China) Co., Ltd.

26F, Global Harbor Tower B,
1188 North Kai Xuan Road,
PuTuo District, Shanghai 200062, China

Tel: +86-21-5496-1177
Fax: +86-21-6422-4650

Sales area **Hong Kong**

Fuji Electric FA (Asia) Co., Ltd.

Room 2015, 20/F., The Metropolis Tower,
10 Metropolis Drive, Hunghom, Kowloon,
Hong Kong

Tel: +852-2311-8282
Fax: +852-2312-0566

Sales area **Taiwan**

Fuji Electric Taiwan Co., Ltd.

10F., No.168, Songjiang Rd., Taipei,
Taiwan (R.O.C) PO# 10459

Tel: +886-2-2511-1820
Fax: +886-2-2511-1830

Sales area **Korea**

Fuji Electric FA Korea Co., Ltd.

16th Fl., Shinsong Bldg. 25-4, Youido-dong,
Youngdungpo-gu, Seoul, Korea

Tel: +82-2-780-5011
Fax: +82-2-783-1707

Sales area **South East Asia, Oceania**

Fuji Electric FA (Asia) Co., Ltd.

Room 2015, 20/F., The Metropolis Tower,
10 Metropolis Drive, Hunghom, Kowloon,
Hong Kong

Tel: +852-2311-8282
Fax: +852-2312-0566

Sales area **Thailand**

Fuji Electric (Thailand) Co., Ltd.

43 Thai CC Tower, 11th Fl. Room 114-6,
South Sathorn RD., Yannawa Sathorn,
Bangkok 10120, THAILAND

Tel: +66-2-210-0615, 0616
Fax: +66-2-675-6641

Sales area **North America**

Fuji Electric Corp of America

47520 Westinghouse Drive, Fremont,
CA 94539, USA

Tel: +1-510-440-1060
Fax: +1-510-440-1063

Sales area **Europe**

Fuji Electric Europe GmbH

Goethering 58, 63067 Offenbach Main,
GERMANY

Tel: +49-69-6690290
Fax: +49-69-6661020

D&C CATALOG DIGEST INDEX

A	**Motor Control**	
	A1	Magnetic Contactors and Starters, Thermal Overload Relays, Solid-state Contactors
	A2	Manual Motor Starters and Contactors, Combination Starters
B	**LV Distribution**	
	B1	Molded Case Circuit Breakers, Earth Leakage Circuit Breakers
	B2	Circuit Protectors, Low Voltage Fuses
C	**Control**	
	C1	Pushbuttons, Selector Switches, Pilot Lights, Rotary Switches, Cam Type Selector Switches, Panel Switches, Terminal Blocks, Testing Terminals
	C2	Industrial Relays, Industrial Control Relays, Annunciator Relay Unit, Time Delay Relays
	C3	Limit Switches, Proximity Switches, Photoelectric Switches
D	**Energy Control Equipment**	
	D1	Measuring Instruments, Arresters, Transducers, Power Factor Controllers, Power Monitoring Equipment (F-MPC)
	D2	AC Power Regulators, Noise Suppression Filters, Control Power Transformers
E	**MV Distribution Equipment**	
	E1	Disconnecting Switches, Power Fuses, Air Load Break Switches, Instrument Transformers
	E2	Vacuum Circuit Breakers, Vacuum Magnetic Contactors, Protective Relays

DISTRIBUTION & CONTROL CATALOG

Digest 21th Edition

Fuji Electric FA Components & Systems Co., Ltd.

5-7, Nihonbashi Odemma-cho, Chuo-ku, Tokyo, 103-0011, Japan

URL http://www.fujielectric.co.jp/fcs/eng

Information in this catalog is subject to change without notice.

First Edition 1979 printed in Japan 2020-03 PDF FOLS DEC21

ST CARE
REPAIR DRIVE
ศูนย์ซ่อม อิเล็กทรอนิกซ์อุตสาหกรรม DIVISION

ได้รับการรับรอง
อย่างเป็นทางการจาก

Fuji Electric
Innovating Energy Technology

Certificate of Repair Service

S.T.CONTROL CO.,LTD.

FRN-G11S Series (below 220[kW])
FRN-P11S Series (below 220[kW])
FRN-VG7S Series (below 220[kW])
FALDIC-α Series
FALDIC-W Series

รับซ่อม
อุปกรณ์อิเล็กทรอนิกส์อุตสาหกรรม ทุกชนิด, ทุกยี่ห้อ, ทุกรุ่น อาทิเช่น

- Inverter
- Srevo Motor & Amplifier
- HMI (Touch Screen)
- PLC
- Temperature Controller
- Paperless Recorder

เราจำหน่ายอะไหล่ SPARE PART

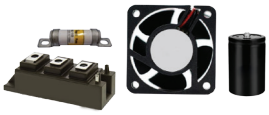

- IGBT
- PCB Control
- Capacitor
- Fuse
- Power Module
- Base Drive
- Fan

ขอบเขตการทำงาน

- ตรวจสอบ และ ประเมินอายุการใช้งานของส่วนประกอบต่างๆ
- ตรวจสอบตัวเก็บประจุไฟฟ้า (Capacitor bank)
- ตรวจสอบเวอร์ชั่นของซอฟแวร์
- ตรวจสอบข้อมูลของมอเตอร์
- ตรวจสอบตัวอุปกรณ์ควบคุมแรงดันไฟฟ้า (Control voltage)
- ตรวจสอบพัดลมระบายความร้อน
- ตรวจสอบแรงดัน DC bus
- อธิบายการใช้งานและการดูแลรักษาที่ถูกต้อง
- สำรองข้อมูลค่าพารามิเตอร์
- ส่งรายงานสรุปผลการทำ PM

ข้อดี

- รักษาประสิทธิภาพในการทำงานของอินเวอร์เตอร์
- ง่ายต่อการดูแลรักษาและบริหารจัดการ
- ลดต้นทุนในการผลิต
- ทราบผลการวิเคราะห์ปัญหาหน้างาน
- ได้รับคำปรึกษาจากผู้เชี่ยวชาญในการป้องกันปัญหาที่อาจจะเกิดขึ้นในอนาคต

บริการอื่นๆ

- **งานยกเครื่องอินเวอร์เตอร์ (Overhaul)**
  คือการนำผลการตรวจสอบอุปกรณ์มาวิเคราะห์การทำงาน เพื่อป้องกันความเสียหายที่อาจจะเกิดขึ้นในอนาคต
- **บริการ Onsite Service** แก้ไขปัญหาต่างๆ ที่หน้างาน

Tel: 02 105 5999 | E-mail: sales@stcontrol.com | www.stcontrol.com

ST GROUP

Your Partner in Factory Solutions

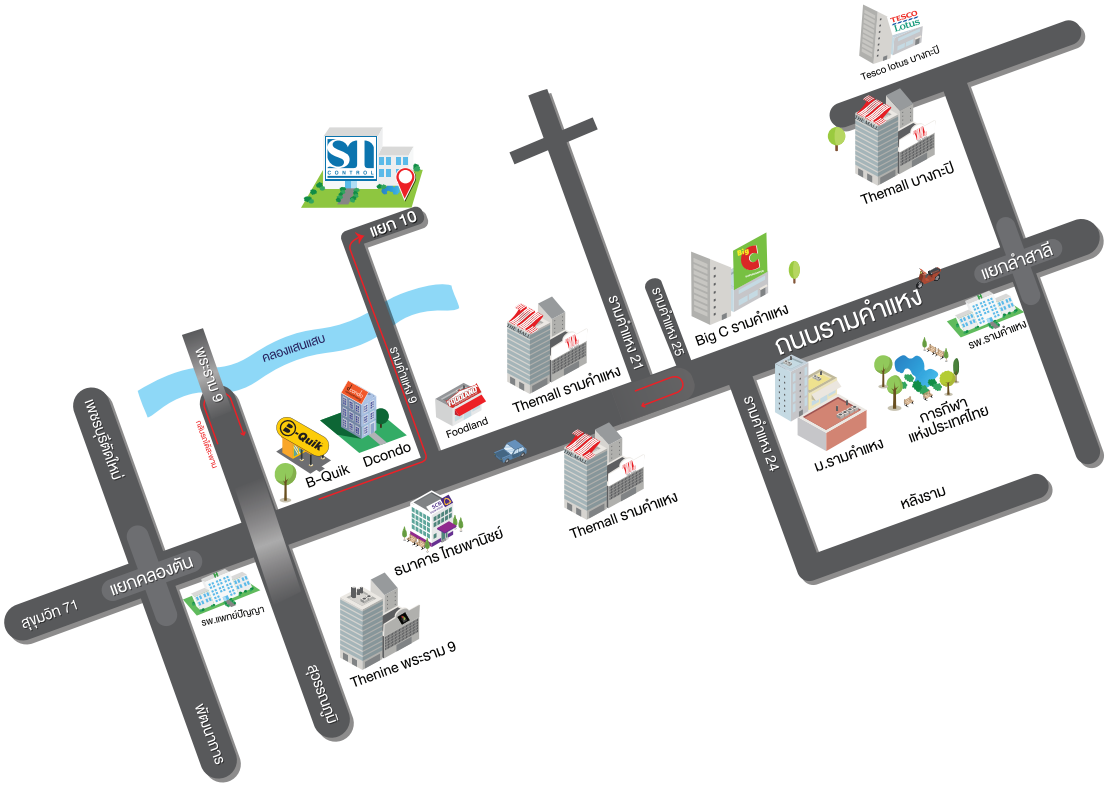

Contact

02 105 5999

www.stcontrol.co.th

"สิทธิพิเศษที่มากกว่าในมือคุณ"

STC-AU-20200430 E.6.0

S.T. Control Co., Ltd.

Bangkok
84/1 Soi Ramkhamhaeng 9
(Thararom), Plubpla,
Wangthonglang,
Bangkok Thailand

Tel (+662) 105 5999
Fax (+662) 105 5995

Rayong
155/41-42 Ploenjai Village5,
Tabna Muang
Rayong Thailand

Tel (+6638) 024 359-61
Fax (+6638) 024 364

Contacts:
Email : info@stcontrol.com
Web : www.stcontrol.com www.stcontrol.co.th

Add Friends

Find us on facebook

DOWLOAD CATALOG